GATES INDUSTRIAL POWER TRANSMISSION

AGRICULTURAL BELT PROGRAMME

CATALOG NO.	20142
EDITION	2020
SUPERSEDES	20142 (2015)



DRIVEN BY POSSIBILITY™



OUR VISION

“CONTINUALLY PUSH THE BOUNDARIES OF MATERIALS SCIENCE TO ADVANCE THE WAY THE WORLD MOVES.”

GATES. DRIVEN BY POSSIBILITY.

If it runs, we can help it run better. Gates is a global leader in power transmission and fluid power products and services. We serve customers across industries, bringing relentless innovation, and uncompromising quality to every product we make. Our reputation is built on over a century of experience, but everything we do is geared towards powering the future.

GATES HELPS YOUR MACHINES RUNNING. ALL YEAR LONG.

Recognising the demands of agricultural machinery, Gates offers you a specially designed Agricultural Belt Programme. This comprehensive range of agricultural replacement belts covers a multitude of applications on combines, forage harvesters and tractors. The programme ensures trouble-free and long-lasting service in the most demanding working conditions of farming machinery. Gates products are built to original equipment quality and offer excellent performance.

EE-TECH: INNOVATION FUELED BY MATERIALS SCIENCE.

Change is a part of the Gates DNA. We never stand still, but are always looking for ways to meet emerging challenges head-on with solutions that accelerate your growth and development. To address the rising demand for uptime in the highly competitive and global industrial equipment market, Gates engineers have developed a new Ethylene Elastomer wrapped V-belt family: EE-TECH. Read more what this Gates-innovation can do for your agricultural belt application on page 7.

FIT FOR HEAVY DUTY

Gates is a leading manufacturer of high-quality and heavy-duty belts for the automotive, industrial and agricultural markets. Gates belts feature superior performance through the use of state-of-the-art materials and manufacturing processes. Choosing Gates is not just buying belts, but also being assured of the power of an experienced brand name. Gates has a long history of creating new products and materials to meet constantly evolving requirements. Our worldwide customer base stems from our advanced belt technology, product development policy and innovative design procedures.

As a supplier to leading original equipment manufacturers all over the world, Gates offers an OE equivalent for your belt replacements!



INTRODUCTION

PRODUCT INFORMATION 7
ACTIVE PARTNERSHIP 12
PREVENTIVE MAINTENANCE INFORMATION 13
HOW TO USE THE CATALOGUE 20

COMBINE HARVESTERS

ALPHABETICAL LISTING BY COMBINE HARVESTER 24
APPLICATIONS 32

TRACTORS

ALPHABETICAL LISTING BY TRACTOR 803
APPLICATIONS 804

MANUFACTURERS' PART NUMBER LISTING

..... 886



INNOVATION FUELED BY MATERIALS SCIENCE.
EE-TECH: ETHYLENE ELASTOMER BANDED V-BELTS

Change is a part of the Gates DNA. We never stand still, but are always looking for ways to meet emerging challenges head-on with solutions that accelerate your growth and development. To address the rising demand for uptime in the highly competitive and global industrial equipment market, Gates engineers have developed a new wrapped V-belt family. The material science used to develop these innovative products is unique to Gates. Ethylene elastomer banded V-belts provide greater machinery uptime, temperature performance and smooth running stability over prior generation agricultural and industrial OEM V-belts.

IMPROVING AGRICULTURAL-BELT PERFORMANCE - ETHYLENE ELASTOMER BANDED POWERBANDS

- Latest innovation, worlds first wrapped EE based platform
- Uptime: 30% longer lifetime
- Stability: smooth running & improved flex life
- Extended temperature resistance: up to +130°C
- Unmatched performance: improved crack resistance, durability and reduced wear
- Maximum power capacity: optimised aramid tensile cords
- Environmentally improved: no chlorine compound
- Available in HB- & HC-PowerBand profiles

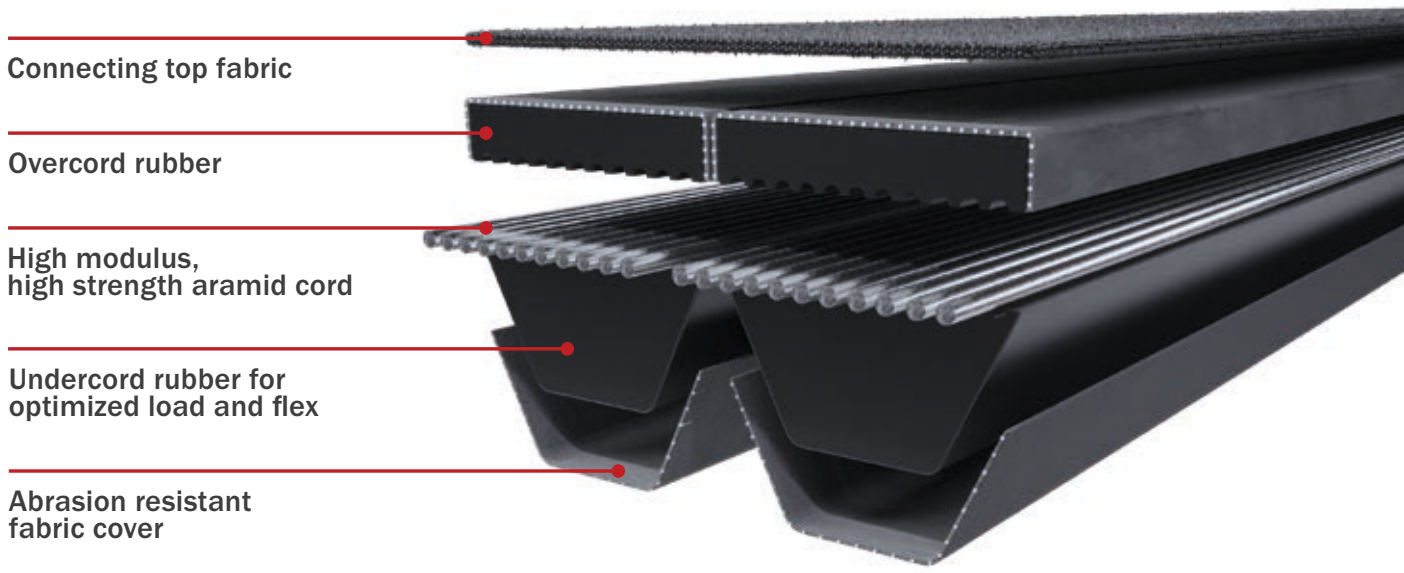

GATES AGRI - POWERBAND™ BELTS

The Gates AGRI PowerBand™ V-belt has a long reputation for reliability on demanding agricultural applications: combine harvesters, forage harvesters, windrower, flail mowers, chaff cutters. This PowerBand V-belt allows multiple belts to function as a single unit, with even load distribution and each strand fitting securely in the sheave groove. It is made of rubber materials for resistance to weathering, oils, water, and some solvents. It has a flex-weave cover for flexibility and strength, and its cords are strongly bonded to the body of the belt for equal load distribution and reducing bending stress without deterioration of the cord.

APPLICATION BENEFITS

- Shock load resistant
- High performance density
- Smooth clutching
- Stable, smooth running pattern
- Enhanced peak load absorption
- Withstand debris, punctures and slippage
- Improved back idler durability
- Modern EE-TECH rubber material: high temperature resistance up to +130°C
- Resists elongation
- High abrasion resistance
  Agri-grade flex weave

CONSTRUCTION

- Topband fabric
- PES/Aramid Cord
- Fibre loaded rubber
- Flex weave fabric
- Available in banded or bandless version

BELT PROFILES

- HA, HB, HC, HD
  (H = Agri Heavy duty construction)
- 3V/5V - SPB/SPC

LENGTH RANGE

- 1.200 - 11.500 mm
- Manufactured to Agricultural belt standard: ASAE S211.5



GATES AGRI - VARIATOR BELTS

Specially constructed with high-modulus and fibre-loaded stock, AGRI variator belts offer stability and flexibility at the same time. As a result, you can expect higher load carrying capacity and prolonged belt life. What's more, our line of banded and bandless agricultural variator belts are tuned towards all agricultural, variable speed drives. The Gates AGRI variator belts can handle any demanding agricultural application: combine harvesters threshing drum variator, ventilator/tailings blower applications, reel application, ground traction drive, cutterbar.

APPLICATION BENEFITS

- High temperature resistance
- Withstand posi-torque variator side wall forces
- Handles high linear speed
- Maintains threshing RPM for efficient grain rentability
- Gets the harvest done
- Oil and heat resistant
- Maximized belt life
- OE performance
- Improved threshing performance
- Modern EE-Tech rubber material: high temperature resistance up to +130°C

CONSTRUCTION

- Top fabric
- PES/Aramid Cord
- High fibre loaded rubber
- Optimized notch
- Available in banded or bandless version

BELT PROFILES

- MD-HI-HJ-HK-HL-HM-HN-HO-HQ-H100 (H = Agri Heavy duty construction)
- 28 up to 100 mm width

LENGTH RANGE

- 925 - 5.800 mm
- Manufactured to Agricultural belt standard: ASAE S211.5



GATES AGRI - V-BELTS

When you need V-belts strong enough to handle your agricultural equipment, trust Gates to deliver. During your harvest, uptime dependability is at its highest. Gates engineers our OE-exact banded, bandless, V-belt systems to perfectly match the construction of your original equipment farming machinery, like combine harvesters, forage harvesters, flail mowers.

APPLICATION BENEFITS

- Reliable power transmission
- High bending flexibility
- Smooth running characteristics
- High abrasion resistance
  Agri-grade flex weave
- Great flexibility - low stretch
- Engineered for use with backidlers
- Suited for twisted belt drives
  (90° or 180°)
- Great length stability

CONSTRUCTION

- PES/Aramid cord
- High fibre loaded rubber
- Flex weave fabric
- Available in banded or
  bandless version

BELT PROFILES

- 8MM - Z (10MM) - A (13MM) - B (17MM) - 20MM - C (22MM) - 25MM - D (32MM) - E (38MM)
- SPZ - SPA - SPB - S19 - SPC
- AV10 - AV11 - AV13 - AV15

LENGTH RANGE

- 530 - 11.500 mm
- Manufactured to Agricultural belt
  standard: ASAE S211.5



GATES AGRI - DOUBLE V-BELTS

Gates leads the way in the development of cost effective and energy efficient belt drive systems, and now, we're bringing you our line of AGRI double V-belts, characterised by a double-V profile. It uses flex-bonded tensile cords, which are highly resistant to flexing forces, and a protective Flex-Weave™ cover. It is the ideal solution for "serpentine" drives (drives with counter rotating shafts) where power is transmitted from both the top and the bottom of the belts. When your operations call for power transmission on both sides of the application, look no further than Gates double V-belts to power your most demanding applications, like combine harvesters, forage harvesters, flail mowers, etc.

APPLICATION BENEFITS

- Suited for serpentine drives
- Shock load resistant
- Improved bending flexibility
- Smooth running characteristics
- Transmit power on both sides
- High length stability

CONSTRUCTION

- PES/Aramid cord
- High fibre loaded rubber
- Flex weave fabric
- Available in banded or bandless version

BELT PROFILES

- HAA-HBB-HCC
  (H = Agri Heavy duty construction)

LENGTH RANGE

- 1,200 - 7,600 mm
- Manufactured to ASAE S211.5 standard



COMMITTED TO YOUR BUSINESS

GATES GOES DIGITAL

In this ever-changing world of electronic communication and the internet, it has become more important than ever to have the right information available at the right time: quickly and accurately. Gates offers its complete Agricultural Belt programme in an online version. Thanks to this, you will always have all the information you need, right at your fingertips.

E-COMMERCE WEBSITE

By going online, registered Gates distributors for agricultural belts can find the most current product information including newest application lists and cross-reference lists, check availability in real time and enter and track orders 24 hours/day. There are 4 possible search criteria: by Gates reference, by OE reference, by manufacturer or by machine. The e-commerce website is particularly designed for our distributors and is password-protected. Our customer service team will be happy to provide you with your personal user ID and password.

Check it out at www.gates.com/gb/en/industries/agriculture/agricultural-belt-programme.html.

ONLINE TRAINING & SUPPORT

We're more than your power transmission and fluid power solutions provider. We're your trusted partner to improve your operations, and your industry expertise. Read up on the latest industry research, download our pro-grade softwares and tools, and enroll your team in our training programs, specifically designed to build key industry skill sets and turn your employees into product application experts. Head over to the Gates.com Knowledge Centre to find out more.



A GOOD MAINTENANCE PROGRAMME

Belt drives regularly require a thorough inspection. Agricultural belts work in the heaviest conditions possible, which implies even more frequent inspections. The potential for long service life is built into every Gates belt. When coupled to a good maintenance programme, your belts and drives will run relatively trouble-free for a long period of time.

By following the advice below, you can maintain a drive efficiently, safely and with very little effort.

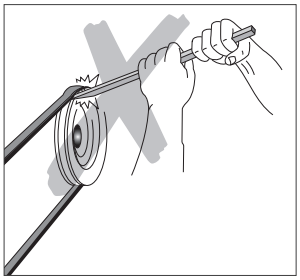

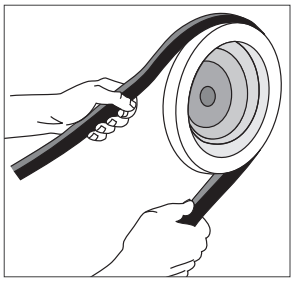

BELT INSTALLATION

1. After the power has been turned off, isolated (i.e. locked) and the guard removed, unbolt one of the pulleys and move it until the belt is slack, or relax and secure the tensioner. The belt can then be removed without prising. Never prise off a belt!
2. Remove old belts. Check them for unusual wear. Excessive wear may indicate problems with drive design or maintenance procedures.
3. Select correct replacement belt.
4. You can clean belts and pulleys with a rag slightly dampened with a light, non-volatile solvent. Avoid soaking or brushing the solvent on the belt. Do not sand or scrape the belt with a sharp object to remove grease or debris. Belts must be dry before using on a drive.
5. Inspect pulleys for wear and damage. If more than 0.4 mm of wear can be seen, the pulley should be replaced. Make sure the pulleys are properly aligned.
6. Inspect other drive components such as bearings and shafts for alignment, wear, lubrication...
7. Install a new belt or belt set. Replace all belts on multiple belt drives. Do not mix old and new belts. Older belts do not retain tension as well as new belts. If you mix belts, the load may be carried only by the new belts. This can result in premature failure. Also, never mix belts from different manufacturers. Belts with different origins may have different characteristics that can cause the belts to work against each other, resulting in unusual strain and short service life.
8. Take up centre distance on the drive. Rotate the drive by hand for a few revolutions until proper tension is obtained on the tension tester. Some long belts may appear to hang unevenly when installed. It is normal for belts within match tolerances to create noticeable differences in deflection. This “catenary effect” is a curve made by a cord of uniform weight suspended between two points. This appearance will change with proper run-in and tensioning.
9. Secure pulley or tensioner mounting bolts to correct torque.
10. Replace guard and make sure the drive can turn free from external elements.
11. Let the belts run in for a while. This process consists of starting the drive, letting it run under full load, and then stopping, checking and retensioning to recommended values. Running the belts under full load allows them to seat themselves in the grooves. This run-in period will reduce the future need for retensioning.
12. During start-up, look and listen for unusual noise or vibration. It is a good idea to shut down the machine and check the bearings and motor. If they feel hot, the belt tension may be too tight. Or the bearing may be misaligned or improperly lubricated.

BELT AND PULLEY INSPECTION

Always first read the operating instructions of your machine attentively. Pay special attention to the safety measures that should be taken operating the machine. Always follow the instructions given there.

Belt inspection
By observing signs of unusual belt wear or damage, you will be able to troubleshoot possible drive problems. Mark a point on the belt, or one of the belts on a multiple V-belt drive. Work your way around the belt(s), checking for cracks, frayed spots, cuts or unusual wear patterns. Check the belt for excessive heat. Belts do warm up while operating, but temperatures must not exceed certain limits. Your hand can tolerate up to about 45 °C (113 °F); if belts are too hot to touch, troubleshooting may be needed. Belts should be replaced if they show obvious signs of cracking, fraying or unusual wear.

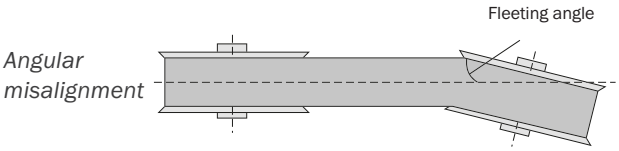

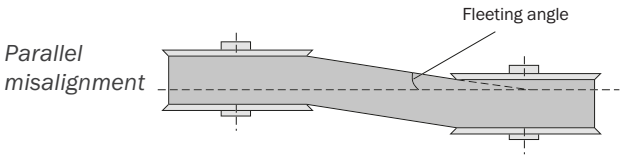

Pulley inspection
If belts have been removed from the drive, check pulleys for unusual wear or obvious signs of damage. Wear is not always obvious. Use sheave gauges to check V-grooves. Always check pulleys for proper alignment and mounting. Improperly aligned pulleys result in reduced service life. The main causes of misalignment are:

- pulleys are improperly located on the shafts;
- motor shafts and driven machine shafts are not parallel;
- pulleys are tilted due to improper mounting.

Forms of misalignment
To check alignment, you will need a straight edge or, for long centre distance drives, heavy string. Line the straight edge or string along a machined face of both pulleys. Misalignment will show up as a gap between the face of the pulley and the straight edge or string. When using this method, make sure the distance between the groove edge and the outer rim of both pulleys is identical. Pulleys can also be checked for tilting with a spirit level.

You can also check misalignment by using Gates' unique laser alignment device, LASER AT-1. The laser line projected onto the targets allows you to quickly ascertain and correct misalignment.



BELT TENSION

The final step is to check belt tension, and, if necessary, retension the belt. If too little tension is applied, V-belts may slip. The correct tension is the lowest tension at which the belts will transmit power when the drive is at full load.

The general procedure to check belt tension is as follows:

1. Measure at the centre of the span (t) the force required to deflect the belt on the drive 1 mm per 100 mm span length from its normal position.
2. If the measured force is less than the minimum recommended deflection force, the belts should be tightened.
3. New belts can be tensioned until the deflection force per belt is as close as possible to the maximum recommended

AFTER USE

Combine harvesters and tractors should be stored in a dry and covered location, out of the sun, and should be cleaned with water after use. Cleaning with derivates of oil or other chemicals reduces the useful life of the components. Sunlight, oil, paint, solvents are all natural enemies of rubber products. Don't spray oil on the belts after washing the machine.

STOCK KEEPING

Replacement belts should be stored in a dry location, out of the sun. Make sure not to knick them and not to put any weight on them.

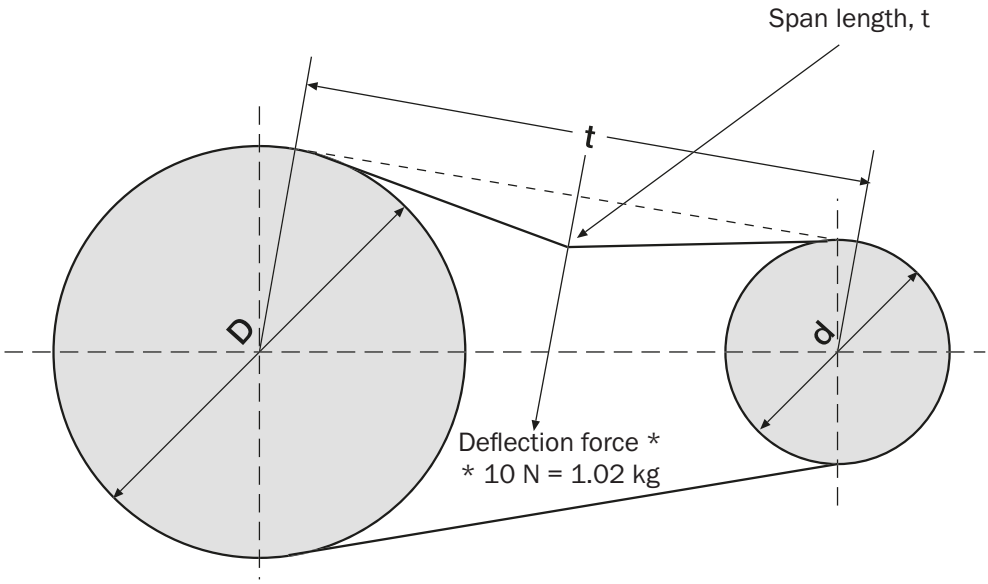

TROUBLESHOOTING GUIDE

When troubleshooting a drive problem, your goal is to identify the cause(s) and then to take appropriate corrective action. The information in this section will help you put your drive back in operation.

	SYMPTOMS	PROBABLE CAUSE	SOLUTION
PREMATURE BELT FAILURE	Broken belt(s) 	1. Belt rolled or prised onto pulley	1. Use drive take-up when installing.
		2. Object falling into drive	2. Provide adequate guard or drive protection.
		3. Severe shock load	3. Redesign to accomodate shock load.
	Belt fails to carry load (slip) without visible reason	1. Damaged tensile member	1. Follow correct installation procedure.
		2. Worn pulley grooves	2. Check for groove wear, replace as needed.
	Edge cord failure	1. Pulley misalignment	1. Check and correct alignment.
		2. Damaged tensile member	2. Follow installation procedure.
	Belt delamination or undercord separation	1. Pulleys too small	1. Check drive design, replace with larger pulleys.
		2. Backside idler too small	2. Increase backside idler to acceptable diameter.
SEVERE OR ABNORMAL BELT WEAR	Wear on belt top surface	1. Rubbing against guard	1. Replace or repair, adjust guard.
		2. Idler malfunction	2. Replace idler.
	Wear on belt top corners	1. Belt-to-pulley fit incorrect (belt too small for groove)	1. Use correct belt-to-pulley combination.
	Wear on belt sidewalls 	1. Belt slip	1. Retension until slipping stops.
		2. Misalignment	2. Realign pulleys.
		3. Worn pulleys	3. Replace pulleys.
		4. Incorrect belt	4. Replace with correct belt size.
	Wear on belt bottom corners	1. Belt-to-pulley fit incorrect	1. Use correct belt-to-pulley combination.
		2. Worn pulleys	2. Replace pulleys.
	Wear on belt bottom surface 	1. Belt bottoming on pulley groove	1. Use correct belt/pulley match.
		2. Worn pulleys	2. Replace pulleys.
		3. Debris in pulleys	3. Clean pulleys.
	Undercord cracking	1. Pulley diameter too small	1. Use larger diameter pulleys.
		2. Belt slip	2. Retension.
		3. Backside idler too small	3. Use larger diameter backside idler.
		4. Improper storage	4. Do not coil belt too tightly, kink or bend. Avoid heat and direct sunlight.

	SYMPTOMS	PROBABLE CAUSE	SOLUTION
SEVERE OR ABNORMAL BELT WEAR	Burn or hardening on belt bottom or sidewalls 	1. Belt slip	1. Retension until slipping stops.
		2. Worn pulleys	2. Replace pulleys.
		3. Shaft movement	3. Check for centre distance changes.
	Extensive hardening of belt exterior	1. Hot drive environment	1. Improve ventilation to drive.
	Flaking, sticky or swollen belt surface 	1. Oil or chemical contamination	1. Do not use belt dressing. Eliminate sources of oil, grease or chemical contamination.
BELT TURNS OVER OR COMES OFF THE DRIVE	Involves single or multiple belts 	1. Shock loading or vibration	1. Check pulley groove condition.
		2. Foreign material in grooves	2. Shield grooves and drive.
		3. Misaligned pulleys	3. Realign pulleys.
		4. Worn pulley grooves	4. Replace pulleys.
		5. Damaged tensile member	5. Use correct installation and belt storage procedure.
		6. Incorrect placed flat idler pulley	6. Carefully place flat idler on slack side of drive as close as possible to driveR pulleys.
		7. Mismatched belt set	7. Replace with new set of matched belts. Do not mix old and new belts.
		8. Poor drive design	8. Check for centre distance stability and vibration dampening.
BELT STRETCHES BEYOND AVAILABLE TAKE-UP	Multiple belts stretch unequally	1. Misaligned drive	1. Realign and retension drive.
		2. Debris in pulleys	2. Clean pulleys.
		3. Broken tensile member or cord damaged	3. Replace all belts, install properly.
		4. Mismatched belt set	4. Install matched belt set.
	Single belt, or where all belts stretch evenly	1. Insufficient take-up allowance	1. Check take-up. Use allowance specified in Gates Drive Design Manual (E2/20070).
		2. Grossly overloaded or underdesigned drive	2. Redesign drive.
		3. Broken tensile members	3. Replace belt, install properly.
BELT NOISE	Squeal or “chirp”	1. Belt slip	1. Retension.
		2. Contamination	2. Clean belts and pulleys.
	Slapping noise	1. Loose belts	1. Retension.
		2. Mismatched set	2. Install matched belt set.
		3. Misalignment	3. Realign pulleys so all belts share load equally.
	Rubbing sound	1. Guard interference	1. Repair, replace or adjust guard.
	Grinding sound	1. Damaged bearings	1. Replace, align or lubricate.

	SYMPTOMS	PROBABLE CAUSE	SOLUTION
BELT NOISE	Unusually loud drive	1. Incorrect belt	1. Use correct belt size. Use correct belt tooth profile for pulleys on synchronous drive.
		2. Worn pulleys	2. Replace pulleys.
		3. Debris in pulleys	3. Clean pulleys, improve shielding, remove rust, paint or dirt from grooves.
UNUSUAL VIBRATION	Flapping belts	1. Belts undertensioned	1. Retension.
		2. Mismatched belts	2. Install new matched set.
		3. Pulley misalignment	3. Align pulleys.
	Excessive vibration in drive system	1. Incorrect belt	1. Use correct belt section in pulley.
		2. Poor machine or equipment design	2. Check structure and brackets for adequate strength.
		3. Pulley out of round	3. Replace pulley.
		4. Loose drive components	4. Check machine components and guards, motor mounts, motor pads, bushings, brackets and framework for stability, adequate design strength, proper maintenance and proper installation.
PROBLEMS WITH MULTIPLE BELTS	Tie-band separation 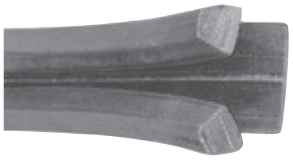	1. Worn pulleys	1. Replace pulleys.
		2. Improper groove spacing	2. Use standard groove pulleys.
	Frayed, worn or damaged top of tie-band 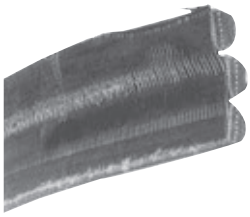	1. Interference with guard	1. Check guard.
		2. Backside idler malfunction or damaged	2. Repair or replace backside idler.
	Multiple belt comes off drive	1. Debris in pulleys	1. Clean grooves. Use single belts to prevent debris from being trapped in grooves.
	One or more ribs run outside of pulley 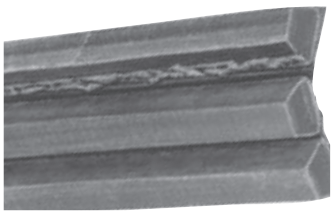	1. Misalignment	1. Realign drive.
		2. Undertensioned	2. Retension.

	SYMPTOMS	PROBABLE CAUSE	SOLUTION
PULLEY PROBLEMS	Broken or damaged pulley	1. Incorrect pulley installation	1. Do not tighten bushing bolts beyond recommended torque values.
		2. Foreign objects falling into drive	2. Use adequate drive guard.
		3. Excessive rim speeds	3. Keep pulley rim speeds below maximum recommended values.
		4. Incorrect belt installation	4. Do not prise belts onto pulleys.
	Severe, rapid groove wear	1. Excessive belt tension	1. Retension, check drive design.
		2. Sand, debris or contamination	2. Clean and shield drive as well as possible.
PROBLEMS WITH OTHER DRIVE COMPONENTS	Bent or broken shaft	1. Extreme belt overtension	1. Retension.
		2. Accidental damage	2. Redesign drive guard.
		3. Machine design error	3. Check machine design.
	Damaged guard	1. Accidental damage or poor guard design	1. Repair, redesign for durability.
HOT BEARINGS	Overtensioned belt	1. Worn grooves - belts bottoming and will not transmit power until overtensioned	1. Replace pulleys, tension drive properly.
		2. Improper tension	2. Retension.
	Too small pulleys	1. Motor manufacturer's pulley diameter recommendation not followed	1. Redesign using Gates Drive Design Manual (E2/20070).
	Poor bearing condition	1. Bearing underdesigned	1. Check bearing design.
		2. Bearing not properly maintained	2. Align and lubricate bearing.
	Pulleys too far out on shaft	1. Error or obstruction problem	1. Place pulleys as close as possible to bearings. Remove obstructions.
	Belt slippage	1. Drive undertensioned	1. Retension.
PERFORMANCE PROBLEMS	Incorrect driveN speeds	1. Design error	1. se correct driveR/driveN pulley size for desired speed ratio.
		2. Belt slip	2. Retension drive.

MAKE SURE YOU HAVE THE RIGHT AGRICULTURAL REPLACEMENT BELT PART NUMBER

COMBINE HARVESTERS

In the index on page 24-31, the names of the combine harvester makes and models are presented in alphabetical order. Follow the associated page number references to go directly to the make and model of your interest.

Once you are on the right page, you go to the application in question. There you will find the right Gates replacement belt reference. Additionally, you can check whether the OE reference on your belt matches with the belt you found in the list.

Example

1. If you want a replacement belt for the tresher drive ARBOS 705 A4L combine harvester, you search for ARBOS 705 A4L in the alphabetical listing on page 24.
2. You go to page 33 of the application listing and look up the Gates reference for the tresher which is 1924209.

	Drawing	OE	Original equipment reference
	Application		Gates reference
	Number of belts		On request

1

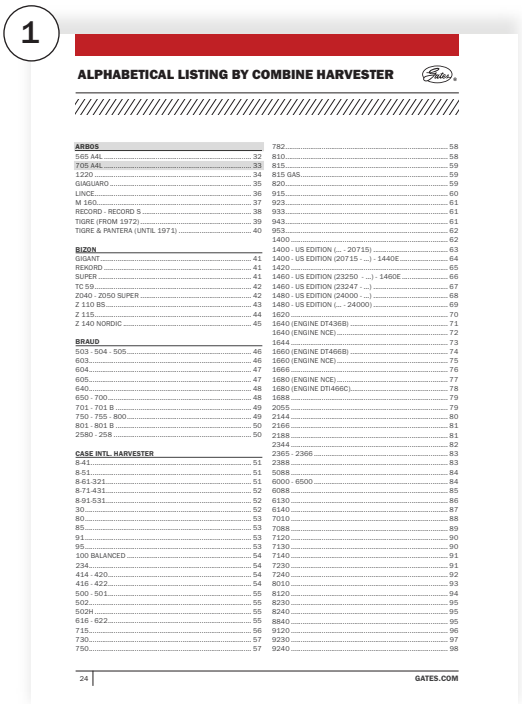

ALPHABETICAL LISTING BY COMBINE HARVESTER

ARBOS
565 A4L 32
705 A4L 33
1220 34
GIAGUARO 35
LINCE 36
M 160 37
RECORD - RECORD S 38
TIGRE (FROM 1972) 39
TIGRE & PANTERA (UNTIL 1971) 40

BIZON
GIGANT 41
REKORD 41
SUPER 41
TC 59 42
Z040 - Z050 SUPER 42
Z 110 BS 43
Z 115 44
Z 140 NORDIC 45

BRAUD
503 - 504 - 505 46
603 46
604 47
605 47
640 48
650 - 700 48
701 - 701 B 49
750 - 755 - 800 49
801 - 801 B 50
2580 - 258 50

CASE INTL. HARVESTER
8-41 51
8-51 51
8-61-321 51
8-71-431 52
8-91-531 52
30 52
80 53
85 53
91 53
95 53
100 BALANCED 54
234 54
414 - 420 54
416 - 422 54
500 - 501 55
502 55
502H 55
616 - 622 55
715 56
730 57
750 57
782 58
810 58
815 59
815 GAS 59
820 59
915 60
923 61
933 61
943 61
953 62
1400 62
1400 - US EDITION (... - 20715) 63
1400 - US EDITION (20715 - ...) - 1440E 64
1420 65
1460 - US EDITION (23250 - ...) - 1460E 66
1460 - US EDITION (23247 - ...) 67
1480 - US EDITION (24000 - ...) 68
1480 - US EDITION (... - 24000) 69
1620 70
1640 (ENGINE DT436B) 71
1640 (ENGINE NCE) 72
1644 73
1660 (ENGINE DT466B) 74
1660 (ENGINE NCE) 75
1666 76
1680 (ENGINE NCE) 77
1680 (ENGINE DTI466C) 78
1688 79
2055 79
2144 80
2166 81
2188 81
2344 82
2365 - 2366 83
2388 83
5088 84
6000 - 6500 84
6088 85
6130 86
6140 87
7010 88
7088 89
7120 90
7130 90
7140 91
7230 91
7240 92
8010 93
8120 94
8230 95
8240 95
8840 95
9120 96
9230 97
9240 98

2

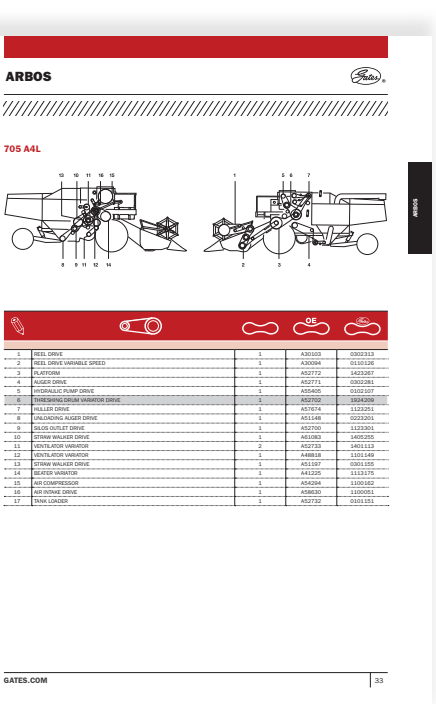

ARBOS

705 A4L

			OE	
1	REEL DRIVE	1	A30103	0302313
2	REEL DRIVE VARIABLE SPEED	1	A30094	0110126
3	PLATORM	1	A52772	1423267
4	AUGER DRIVE	1	A52771	0302381
5	HYDRAULIC PUMP DRIVE	1	A55405	0102107
6	THRESHING DRUM VARIATOR DRIVE	1	A52702	1924209
7	HULLER DRIVE	1	A57674	1123351
8	UNLOADING AUGER DRIVE	1	A51148	0223301
9	SILOS OUTLET DRIVE	1	A52700	1123301
10	STRAW WALKER DRIVE	1	A61083	1405255
11	VENTILATOR VARIATOR	2	A52733	1401113
12	VENTILATOR VARIATOR	1	A48818	1101149
13	STRAW WALKER DRIVE	1	A51197	0301155
14	BEATER VARIATOR	1	A41225	1113175
15	AIR COMPRESSOR	1	A54294	1100162
16	AIR INTAKE DRIVE	1	A58630	1100051
17	TANK LOADER	1	A52732	0101151

TRACTORS

In the index on page 803, all tractor makes are alphabetically listed. Simply find the tractor make in this listing and the corresponding page number will refer you to the page where you will find all necessary details.

Once you have the right page in front of you, you go the tractor model in question and check engine type, year of production, application type and additional information. This will lead you to the right Gates replacement belt reference. Additionally, you can check whether the OE reference on your belt matches with the belt you found in the list.

Example

1. If you want a replacement belt for the generator of your JOHN DEERE 40 tractor, you search for JOHN DEERE in the alphabetical listing on page 803.
2. You go to page 850 of the application listing and search for JOHN DEERE 40.
   You check engine type (e.g. 2-CYL. 101), year of production (e.g. 1953), and you will find that the Gates reference for the generator is 0173186.

	Tractor make/model		Additional information on application		From
	Engine type		Original equipment reference		To
	Year of production		Gates reference		With
	Application				Without

1

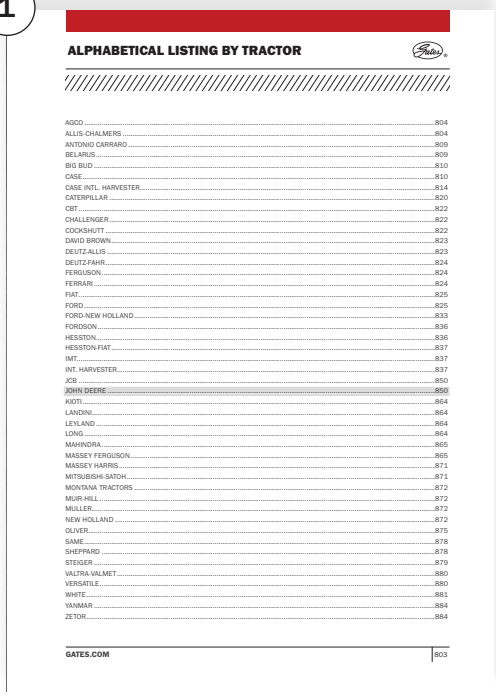

ALPHABETICAL LISTING BY TRACTOR

AGCO 804
ALLIS-CHALMERS 804
ANTONIO CARRARO 809
BELARUS 809
BIG BUD 810
CASE 810
CASE INTL. HARVESTER 814
CATERPILLAR 820
CBT 822
CHALLENGER 822
COCKSHUTT 822
DAVID BROWN 823
DEUTZ-ALLIS 823
DEUTZ-FAHR 824
FERGUSON 824
FERRARI 824
FIAT 825
FORD 825
FORD-NEW HOLLAND 833
FORDSON 836
HESSTON 836
HESSTON-FIAT 837
IMT 837
INT. HARVESTER 837
JCB 850
JOHN DEERE 850
KIOTI 864
LANDINI 864
LEYLAND 864
LONG 864
MAHINDRA 865
MASSEY FERGUSON 865
MASSEY HARRIS 871
MITSUBISHI-SATOH 871
MONTANA TRACTORS 872
MUIR-HILL 872
MULLER 872
NEW HOLLAND 872
OLIVER 875
SAME 878
SHEPPARD 878
STEIGER 879
VALTRA-VALMET 880
VERSATILE 880
WHITE 881
YANMAR 884
ZETOR 884

2

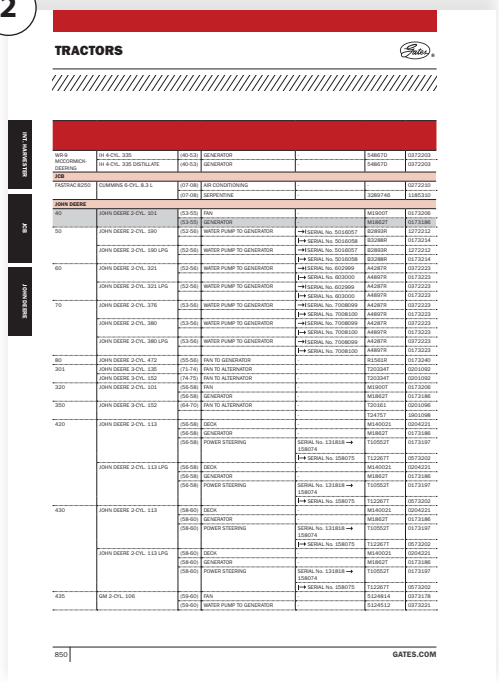

TRACTORS

W9-9 MCCORMICK-DEERING	IH 4-CYL. 335 IH 4-CYL. 335 DISTILLATE	(40-53) (40-53)	GENERATOR GENERATOR		5486TD 5486TD	0172203 0172203
JCB						
FASTRAC 8250	CUMMINS 6-CYL. 8.3 L	(07-08) (07-08)	AIR CONDITIONING SERPENTINE		- 3360746	0272210 1185310
JOHN DEERE						
40	JOHN DEERE 2-CYL. 101	(53-55) (53-55)	FAN GENERATOR		M1900T M1862T	0173206 0173186
50	JOHN DEERE 2-CYL. 190	(52-56)	WATER PUMP TO GENERATOR	→SERIAL No. 5016057 →SERIAL No. 5016058	B2893R B3288R	1272212 0173214
	JOHN DEERE 2-CYL. 190 LPG	(52-56)	WATER PUMP TO GENERATOR	→SERIAL No. 5016057 →SERIAL No. 5016058	B2893R B3288R	1272212 0173214
60	JOHN DEERE 2-CYL. 321	(52-56)	WATER PUMP TO GENERATOR	→SERIAL No. 602999 →SERIAL No. 603000	A4287R A4897R	0372223 0173223
	JOHN DEERE 2-CYL. 321 LPG	(52-56)	WATER PUMP TO GENERATOR	→SERIAL No. 602999 →SERIAL No. 603000	A4287R A4897R	0372223 0173223
70	JOHN DEERE 2-CYL. 376	(53-56)	WATER PUMP TO GENERATOR	→SERIAL No. 7008099 →SERIAL No. 7008100	A4287R A4897R	0372223 0173223
	JOHN DEERE 2-CYL. 380	(53-56)	WATER PUMP TO GENERATOR	→SERIAL No. 7008099 →SERIAL No. 7008100	A4287R A4897R	0372223 0173223
	JOHN DEERE 2-CYL. 380 LPG	(53-56)	WATER PUMP TO GENERATOR	→SERIAL No. 7008099 →SERIAL No. 7008100	A4287R A4897R	0372223 0173223
80	JOHN DEERE 2-CYL. 472	(55-56)	FAN TO GENERATOR		B1561R	0172240
301	JOHN DEERE 3-CYL. 135	(71-74)	FAN TO ALTERNATOR		T2033AT	0201092
	JOHN DEERE 3-CYL. 152	(74-75)	FAN TO ALTERNATOR		T2033AT	0201092
320	JOHN DEERE 2-CYL. 101	(55-58) (55-58)	FAN GENERATOR		M1900T M1862T	0173206 0173186
350	JOHN DEERE 3-CYL. 152	(64-75)	FAN TO ALTERNATOR		T2016T T2475T	0201096 0201096
420	JOHN DEERE 2-CYL. 113	(55-58) (55-58) (55-58)	DECK GENERATOR POWER STEERING		M1402T M1862T SERIAL No. 131818 → 158074 → SERIAL No. 158075	0204221 0173186 T1055ZT T1226TT	0173197 0173202
	JOHN DEERE 2-CYL. 113 LPG	(55-58) (55-58) (55-58)	DECK GENERATOR POWER STEERING		M1402T M1862T SERIAL No. 131818 → 158074 → SERIAL No. 158075	0204221 0173186 T1055ZT T1226TT	0173197 0173202
430	JOHN DEERE 2-CYL. 113	(58-60) (58-60) (58-60)	DECK GENERATOR POWER STEERING		M1402T M1862T SERIAL No. 131818 → 158074 → SERIAL No. 158075	0204221 0173186 T1055ZT T1226TT	0173197 0173202
	JOHN DEERE 2-CYL. 113 LPG	(58-60) (58-60) (58-60)	DECK GENERATOR POWER STEERING		M1402T M1862T SERIAL No. 131818 → 158074 → SERIAL No. 158075	0204221 0173186 T1055ZT T1226TT	0173197 0173202
435	GM 2-CYL. 106	(59-60) (59-60)	FAN WATER PUMP TO GENERATOR		5124814 5124512	0373176 0373221

MANUFACTURERS' PART NUMBER LISTING

With this list on page 887 you can easily identify the Gates belt corresponding to the OE belt. The information in this section is meant for reference only. Always determine the correct replacement belt from the application listings in this catalogue.



COMBINE HARVESTERS

DRIVEN BY POSSIBILITY™

ALPHABETICAL LISTING BY COMBINE HARVESTER

ARBOS
565 A4L 32
705 A4L 33
1220 34
GIAGUARO 35
LINCE 36
M 160 37
RECORD - RECORD S 38
TIGRE (FROM 1972) 39
TIGRE & PANTERA (UNTIL 1971) 40

BIZON
GIGANT 41
REKORD 41
SUPER 41
TC 59 42
Z040 - Z050 SUPER 42
Z 110 BS 43
Z 115 44
Z 140 NORDIC 45

BRAUD
503 - 504 - 505 46
603 46
604 47
605 47
640 48
650 - 700 48
701 - 701 B 49
750 - 755 - 800 49
801 - 801 B 50
2580 - 258 50

CASE INTL. HARVESTER
8-41 51
8-51 51
8-61-321 51
8-71-431 52
8-91-531 52
30 52
80 53
85 53
91 53
95 53
100 BALANCED 54
234 54
414 - 420 54
416 - 422 54
500 - 501 55
502 55
502H 55
616 - 622 55
715 56
730 57
750 57
782 58
810 58
815 59
815 GAS 59
820 59
915 60
923 61
933 61
943 61
953 62
1400 62
1400 - US EDITION (... - 20715) 63
1400 - US EDITION (20715 - ...) - 1440E 64
1420 65
1460 - US EDITION (23250 - ...) - 1460E 66
1460 - US EDITION (23247 - ...) 67
1480 - US EDITION (24000 - ...) 68
1480 - US EDITION (... - 24000) 69
1620 70
1640 (ENGINE DT436B) 71
1640 (ENGINE NCE) 72
1644 73
1660 (ENGINE DT466B) 74
1660 (ENGINE NCE) 75
1666 76
1680 (ENGINE NCE) 77
1680 (ENGINE DTI466C) 78
1688 79
2055 79
2144 80
2166 81
2188 81
2344 82
2365 - 2366 83
2388 83
5088 84
6000 - 6500 84
6088 85
6130 86
6140 87
7010 88
7088 89
7120 90
7130 90
7140 91
7230 91
7240 92
8010 93
8120 94
8230 95
8240 95
8840 95
9120 96
9230 97
9240 98

16810 99
AFX 8010 100

CLAAS

COLUMBUS 101
COMMANDOR 114 102
COMMANDOR 114 CS 103
COMMANDOR 115 105
COMMANDOR 115 CS 106
COMMANDOR 116 - 228 108
COMMANDOR 116 CS 110
COMMANDOR 228 CS 112
CONSUL 114
DOMINATOR 38 115
DOMINATOR 48 116
DOMINATOR 48 SP 117
DOMINATOR 56 - 66 118
DOMINATOR 58 119
DOMINATOR 58 SP 120
DOMINATOR 68 121
DOMINATOR 68 R 122
DOMINATOR 68 SR 123
DOMINATOR 76 124
DOMINATOR 78 125
DOMINATOR 80 - 85 126
DOMINATOR 86 127
DOMINATOR 88 128
DOMINATOR 88 VX 130
DOMINATOR 96 131
DOMINATOR 98 132
DOMINATOR 98 VX 133
DOMINATOR 100 - 105 134
DOMINATOR 106 135
DOMINATOR 108 - 118 HYDR 136
DOMINATOR 108 - 118 MECH 138
DOMINATOR 108 VX 139
DOMINATOR 112 140
DOMINATOR 114 141
DOMINATOR 115 142
DOMINATOR 116 143
DOMINATOR 118 144
DOMINATOR 128 VX 146
DOMINATOR 130 - 140 - 150 147
DOMINATOR 204 - 203 MEGA 148
DOMINATOR 218 - 208 MEGA 149
EUROPA 150
JAGUAR 60 150
JAGUAR 70 SF 151
JAGUAR 75 - 71 151
JAGUAR 85 152
JAGUAR 670 153
JAGUAR 675 153
JAGUAR 675 HYDRO 154
JAGUAR 680 155
JAGUAR 680 HYDRO 156
JAGUAR 682 157
JAGUAR 682 S - SL 158
JAGUAR 685 - 690 159
JAGUAR 690 SL 160
JAGUAR 695 - 685 SL 161
JAGUAR 800 162
JAGUAR 820 - 840 163
JAGUAR 830 163
JAGUAR 850 163
JAGUAR 860 164
JAGUAR 870 164
JAGUAR 880 165
JAGUAR 890 165
JAGUAR 900 166
JAGUAR 950 166
JAGUAR 980 167
LEXION 410 - 405 168
LEXION 410 II 169
LEXION 420 MONTANA 170
LEXION 430 - 415 171
LEXION 430 II 172
LEXION 430 MONTANA 173
LEXION 440 II 174
LEXION 450 II MTS 176
LEXION 450 TERRA 177
LEXION 460 - 440 178
LEXION 460 II 179
LEXION 460 II MTS 181
LEXION 460 TERRA 182
LEXION 470 183
LEXION 470 MONTANA 184
LEXION 480 185
LEXION 480 II 186
LEXION 480 II MTS 187
LEXION 480 TERRA 188
LEXION 510 189
LEXION 520 MONTANA 191
LEXION 530 192
LEXION 530 MONTANA 193
LEXION 540 - 560 194
LEXION 550 MONTANA 195
LEXION 560 MONTANA 196
LEXION 570 197
LEXION 570 MONTANA 198
LEXION 580 200
LEXION 580 R AUSTRALIA 201
LEXION 600 202
LEXION 670 203
LEXION 740 204
LEXION 750 205
LEXION 770 206
LEXION 780 207
MATADOR - STANDARD - GIGANT 208
MEDION 310 - 320 209
MEDION 330 210

MEDION 330 HYDRO 211
MEDION 340 212
MEGA 202 213
MEGA 202 II 215
MEGA 203 217
MEGA 203 II 219
MEGA 204 221
MEGA 204 II 223
MEGA 208 225
MEGA 208 II 227
MEGA 218 229
MEGA 218 II 231
MEGA 350 233
MEGA 350 TYP 835 234
MEGA 350 TYP 836 235
MEGA 360 - 370 236
MEGA 360 TYP 845 237
MEGA 360 TYP 846 238
MEGA 360 TYP C12 239
MEGA 370 TYP 845 240
MEGA 370 TYP 846 241
MEGA 370 TYP C12 242
MERCATOR 243
MERCATOR 50 - 60 243
MERCATOR S 70 - 75 244
MERCUR 244
OLDER MODELS 245
PROTECTOR 245
SENATOR 246
SF 246
TUCANO 330 - 320 247
TUCANO 340 248
TUCANO 430 249
TUCANO 440 250
TUCANO 580 251

DEUTZ-FAHR

6040 252
6095 HTS 253
M 88 - M 88 S 253
M 600 254
M 660 - M 770 254
M 750 255
M 900 - M 922 - M 1002 255
M 1000 - M 1200 256
M 1102 - M 1202 257
M 1300 - M 1302 - 1302 H 257
M 1600 - M 1620 - M 1630 258
M 2385 259
M 2480 - M 2780 260
M 3280 262
M 3480 - M 3540 263
M 3570 - M 3578 264
M 3580 265
M 3610 265
M 3630 - M 3640 266
POWERLINER 4030 - 4035 267
STARLINER 4040 - 4045 267
TOPLINER 4060 - 4065 268
TOPLINER 4070 - 4075- 4080 - 4090 269
TOPLINER 8XL 270

DRONNINGBORG

D 500 - D 600 271
D 900 - D950 271
D 1200 - D 1250 272
D 1500 - D 1800 272
D 1600 - D 1650 273
D 1900 (T27978) 273
D 2250 274
D 2500 275
D 2600 275
D 3000 S 276
D 3000 S (35994) 276
D 3000 S (F36006) 277
D 3000 S (T36005) 277
D 4000 - D 4000 S (F35057 - T35832) 278
D 4000 - D 4000 S (F35833) 278
D 4000 - D 4000 S (T35056) 279
D 4500 279
D 7000 - D 7000 S 280
D 7200 281
D 7500 282
D 8000 - D 8000 S 283
D 8400 - D 8700 284
D 8500 285
D 8900 286
D 9000 287

EPPLE MOBIL

211 - 220 - 250 288
840 288
940 289
1000 - 1000 S 289
1040 290
1240 291

FENDT

5250 292
6300 - 6330 292
8300 293

FORTSCHRITT

E 512 294
E 514 295
E 516 - E 516 B - E 517 296
E 524 - E 525 297
E 527 298

ALPHABETICAL LISTING BY COMBINE HARVESTER

GLEANER

A65 ... 299
A66 ... 300
A75 ... 301
A76 ... 302
A85 ... 303
A85-AXIAL FLOW ... 304
A86 ... 305
A86-AXIAL FLOW ... 306
N5 - N6 - N7 - R5 - R6 - R7 ... 307
R40 - R50 ... 309
R42 - R52 - R55 ... 310
R60 - R70 ... 311
R62 - R72 ... 312
R65 - R75 ... 313
R66 - R76 ... 314

JOHN DEERE

330 - 430 ... 315
484 ... 315
530 - 630 ... 316
730 ... 316
800 ... 317
830 ... 317
880 ... 317
900 - 900 R - 900 F ... 317
930 - 940 ... 318
950 - 960 - 970 ... 319
952 ... 320
955 ... 321
965 - 965 HYDRO 4 - 975 ... 322
965 - 965 HYDRO - 968 HYDRO ... 323
975 - 975 HYDRO 4 ... 324
985 - 985 HYDRO 4 ... 325
1032 - 1042 - 1052 ... 326
1055 ... 327
1065 - 1068 HYDRO (...-041200) ... 328
1065 - 1068 HYDRO (041201-...) ... 330
1068 ... 332
1072 - 1075 - 1075 HYDRO 4 ... 333
1085 - 1085 HYDRO 4 (... - 041200) ... 335
1085 - 1085 HYDRO 4 (041201 - ...) ... 337
1088 ... 339
1155 - 1157 - 1158 ... 339
1166 - 1166 HYDRO 4 ... 340
1169 - 1169 HYDRO 4 ... 342
1170 ... 343
1174 - 1174 HYDRO 4 ... 344
1177 - 1177 HYDRO 4 ... 345
1188 - 1188 HYDRO 4 ... 346
1450 CWS/WTS - 1550 CWS/WTS ... 347
1470 ... 348
2054 - 2056 - 2058 ... 349
2064 - 2066 ... 351
2250 ... 352
2254 - 2256 - 2258 ... 353
2264 - 2266 ... 355
3300 - 3400 ... 356
3316 ... 357
3430 ... 357
3830 ... 358
4400 ... 359
4420 ... 360
4425 ... 361
4435 - 4435 HYDRO ... 363
5000 SERIES FORAGE HARVESTER ... 365
5200 ... 365
5440 ... 366
5460 ... 366
6000 SERIES FORAGE HARVESTER ... 367
6000 HY-CYCLE ... 367
6600 - 6600 SIDEHILL ... 368
6602 ... 370
6602 HILLSIDE ... 371
6610 ... 372
6620 ... 373
6622 ... 375
6650 ... 375
6700 - 6700S ... 376
6710 ... 376
6750 ... 376
6810 ... 376
6850 ... 376
6910 ... 377
6950 ... 378
7000 SERIES FORAGE HARVESTER ... 378
7440 ... 380
7445 ... 380
7700 ... 381
7720 ... 383
7721 ... 385
7722 ... 386
8820 ... 387
9400 ... 389
9410 ... 390
9450 ... 392
9500 ... 394
9500 SIDE HILL ... 395
9501 ... 396
9510 ... 397
9510 SIDE HILL ... 399
9540 - 9560 - 9580 (EUROPE) ... 401
9540(i) WTS - 9560(i) WTS - 9580(i) WTS ... 402
9550 - 9550 SIDE HILL ... 403
9560 STS ... 405
9560i STS ... 406
9570 STS ... 407
9570 STS - NA EDITION ... 408
9570 STS - SA EDITION ... 409
9600 ... 410

9600 MAXIMIZER 411
9610 413
9610 MAXIMIZER 415
9640(i) WTS - 9660(i) WTS - 9680(i) WTS 416
9650 417
9650 CTS 418
9650 STS - 9750 STS 419
9650 STS - 9750 STS - SA EDITION 421
9660 - NA EDITION 422
9660 STS 423
9670 STS (NA EDITION) 425
9670 STS - 9770 STS (NA EDITION) 426
9670 STS - 9770 STS (SA EDITION) 427
9760 STS 428
9770 STS 429
9860 STS (NA EDITION) 430
9870 STS (NA EDITION) 431
9880 432
9900 432
9910 432
9920 433
9930 433
9935 433
9940 433
9950 434
9960 434
9970 434
9976 435
9980 435
C670 436
CTS (EUROPE) 437
CTS (USA) 438
CTS 2 (USA) 439
CTS II 440
S550 (MODEL YEAR 12/13) 441
S560 442
S650 (... - 785001) 443
S660 (MODEL YEAR 12/13) 444
S670 (MODEL YEAR 12/13) 445
S680 (MODEL YEAR 12/13) 446
S680 HILL MASTER (MODEL YEAR 12/13) 447
S690 (MODEL YEAR 12/13) 448
S690 HILL MASTER (MODEL YEAR 12/13) 449
S660 (MODEL YEAR 14) 450
S670 (MODEL YEAR 14) 451
S680 (MODEL YEAR 14) 452
S690 (MODEL YEAR 14) 453
S690 HILL MASTER (MODEL YEAR 14) 454
S660 (MODEL YEAR 15) 455
S670 (MODEL YEAR 15) 456
S680 (MODEL YEAR 15) 457
S690 (MODEL YEAR 15) 458
S660 (MODEL YEAR 16/17) 459
S670 (MODEL YEAR 16/17) 460
S680 (MODEL YEAR 16/17) 461
S690 (MODEL YEAR 16/17) 462
S760 (MODEL YEAR 18) 463
S770 (MODEL YEAR 18) 464
S780 (MODEL YEAR 18) 465
S790 (MODEL YEAR 18) 466
T550 - T560 (EUROPEAN EDITION) 467
T660 - T670 - T670 (NA EDITION) 468
W540 469
W550 469
W650 470
W660 471
WINDROWER 2270 - 2280 472
WINDROWER 2320 472
WINDROWER 2360 472
WINDROWER 2420 472

KRONE

BIG M II 473
BIG X 500 (700000 - 773000) 473
BIG X 650 (716400 - 718510) 473
BIG X 700 474
BIG X 800 (701805 - 750480) 474
BIG X 850 474
BIG X 1000 (701802 - 750480) 475
BIG X 1100 475
BIG X V8 475
BIG X V12 476

LAVERDA

3200 477
3300 478
3300 AL 480
3350 (EX M 112) 481
3350 (EX AL 112) 482
3400 483
3400 R 483
3450 (EX AL 132) 484
3500 - 3500R - 3550 - 3550R 485
3550 AL 486
3560 AL 487
3600 488
3650 489
3650 R 490
3700 491
3750 492
3750 R 493
3790 494
3850 495
3850 R 496
3890 497
3900 498
L 411 - L413 - L416 - L516 499
L 517 500
L 518 501
L 520 502

L 521 ... 503
L 523 - INTEGRALE ... 504
L 523 - MCS ... 505
L 524 ... 506
L 525 - INTEGRALE ... 507
L 525 - MCS ... 508
L 624 ... 509
L 625 ... 510
L 626 ... 511
L 627 - INTEGRALE ... 512
L 627 - MCS ... 513
M 84 ... 514
M 90 ... 515
M 92 ... 516
M 100 ... 516
M 100 AL ... 517
M 112 ... 517
M 112 AL ... 518
M 120 ... 518
M 132 ... 519
M 150 ... 519
M 152 ... 520
MX 240 ... 521
MX 240 R ... 522
MX 300 ... 523
MX 300 R ... 524

LOVA

140 (FROM 1972) ... 525
1800 (FROM 1972) ... 525
L 2001 - L 1801 ... 526

MASSEY FERGUSON

16 ... 527
20 ... 527
24 ... 528
27 ... 528
29 ... 529
31 ... 529
31 OLD ... 530
86 (F) ... 530
87 (F) ... 531
86 - 87 OLD ... 531
186 (F) ... 532
186 OLD ... 532
187 ... 533
206 ... 533
206 OLD ... 534
240 ... 534
300 ... 535
307 ... 536
307 OLD ... 536
400 ... 537
400 - 500 ... 537
400 - 500 OLD ... 538
410 - 415 ... 538
410 - 415 -510 - 515 OLD ... 539
410 - 510 ... 539
440 ... 540
487 - 506 - 507 ... 541
487 OLD ... 541
500 ... 542
506 OLD ... 542
507 OLD ... 543
510 - 515 ... 544
520 - 525 ... 545
520 ... 545
520 - 525 - 620 - 625 ... 546
520 - 525 - 620 - 625 OLD ... 547
530 - 535 ... 547
530S - 560 - 565 - 660 - 665 ... 548
540 ... 549
550 ... 550
620 - 625 ... 551
630 OLD - 630S OLD ... 551
685 OLD - 685S OLD ... 552
750 - 755 ... 553
750 OLD ... 554
760 ... 555
760 OLD ... 556
760 - 765 ... 557
850 - 855 ... 559
860 - 865 ... 560
890 OLD - 890S - 892 OLD ... 561
3640 ... 562
5650 ... 563
7242 ... 564
7274 (... - 61123) ... 565
7278 (... - 61115) ... 567
8560 ... 569
8570 ... 570
8590 ... 571
8780 ... 572
8780XP ... 573
9690 ... 574
9695 ... 575
9720 ... 576
9790 ... 577
9795 ... 578
9895 ... 579
CHALLENGER 660 ... 580
CHALLENGER 660 B ... 581
CHALLENGER 670 ... 582
CHALLENGER 670 B ... 583
CHALLENGER 680B (Prior SN HUC8101) ... 584
CHALLENGER 680B (Eff. SN HUC8101) ... 585
MF 27 ... 586
MF 29 ... 587
MF 30 - MF 32 ... 588
MF 31 ... 589

MF 34 590
MF 38 591
SWATHER 885 592
WINDROWER 885 592

NEW HOLLAND

339 (PULL TYPE) 593
342 (PULL TYPE) 593
400 (PULL TYPE) 593
525 (PULL TYPE) 593
708 (PULL TYPE) 593
719 (PULL TYPE) 593
819 (PULL TYPE) 594
1000 & 2000 FORAGE HARVESTERS 594
1520 595
1530 596
1540 597
1540 AL 598
1545 599
1550 600
1890 601
1900 602
1905 603
1915 604
2100 605
2115 606
2205 607
2305 607
8030 608
8040 609
8050 610
8055 611
8060 612
8070 613
8080 614
9630 - 9640 - 9645 615
AL 59 - HILLSIDE 616
CL 560 - HILLSIDE 617
CL 6060 617
CR 960 618
CR 980 619
CR 6090 - CR 7090 620
CR 8080 621
CR 8090 622
CR 9040 623
CR 9060 624
CR 9060 ELEVATION 625
CR 9070 ELEVATION 627
CR 9080 628
CR 9080 ELEVATION 629
CR 9090 ELEVATION 630
CS 520 631
CS 540 633
CS 640 635
CS 660 637
CS 6050 639
CS 6060 641
CS 6060 - HILLSIDE 643
CS 6070 645
CS 6080 647
CS 6090 649
CSX 7040 651
CSX 7050 653
CSX 7050 - HILLSIDE 655
CSX 7060 657
CSX 7070 659
CSX 7080 661
CX 720 663
CX 740 665
CX 760 667
CX 780 669
CX 820 671
CX 840 673
CX 860 675
CX 880 677
CX 8030 679
CX 8040 681
CX 8050 683
CX 8060 685
CX 8070 687
CX 8080 689
CX 8090 691
FR 500 693
FR 700 694
FR 850 695
FR 950 696
FR SERIES 697
FX 28 698
FX 38 699
FX 48 700
FX 58 701
FX SERIES 702
FX 300 - FX 375 - FX 450 703
M 80 703
M 89 704
M 103 705
M 122 706
M 133 - M 135 - M 140 706
SWATHER 1112 - 1114 707
SWATHER 2450 - 2550 707
TC 52 - TC 54 - TC 56 708
TC 57 709
TC 5040 710
TC 5050 711
TC 5060 712
TC 5070 713
TC 5080 714
TC 5080 HILLSIDE 715
TF 42 - TF 44 716
TF 46 717

TF 76 718
TF 78 719
TR 70 720
TR 75 721
TR 85 723
TR 86 725
TR 87 726
TR 88 727
TR 89 728
TR 95 729
TR 96 730
TR 97 731
TR 98 732
TR 99 733
TX 30 734
TX 32 735
TX 34 736
TX 36 738
TX62-TX63-TX64-TX65-TX66-TX67-TX68 739

ROSTSELMACH

ACROS 530 741
DON 680 742
DON 1500 A 743
DON 1500 B 744
DON 1500 M 746
NIVA CK-5M-1-75(79)/77(81) 747
RSM 161 749
VECTOR 750

SAMPO ROSENLEW

3065 752
3065 TS 753
3085 754
3085 TS 755
COMIA 756
KINCAID 757
SR 310 758
SR 360 759
SR 410 760
SR 460 761
SR 500 762
SR 580 763
SR 600 764
SR 650 765
SR 680 766
SR 690 767
SR 2010 768
SR 2020 769
SR 2025 770
SR 2035 TS 771
SR 2035 XLS 772
SR 2035 XL (... - 555421) 773
SR 2035 XL (555422 - ...) 774
SR 2045 TS 775
SR 2045 XLS 776
SR 2045 XL (... - 555421) 777
SR 2045 XL (555422 - ...) 778
SR 2050 (... - 1995) HYDR 779
SR 2050 (1996 - 2002) HYDR 780
SR 2055 (... - 1995) HYDR 781
SR 2055 (1996 - 2002) HYDR 782
SR 2065 (... - 1995) HYDR 783
SR 2065 (1996 - 2002) HYDR 784
SR 2065 TS 785
SR 2065 XLS 786
SR 2065 XL (... - 555421) 787
SR 2065 XL (555422 - ...) 788
SR 2085 TS 789
SR 2085 XLS 790
SR 2085 XL (... - 555421) 791
SR 2085 XL (555422 - ...) 792
SR 2095 TS 793
SR 2095 XLS 794
SR 2095 XL (... - 555421) 795
SR 2095 XL (555422 - ...) 796

SEMANATOAREA

COMBINA 140 797
COMBINA C 110 797
COMBINA C 12 M 798
COMBINA C 14 M 798
COMBINA C 14 U 799
COMBINA C 80 799
COMBINA CP 12 800

VALTRA

BC 4500 801

565 A4L

			OE	
1	REEL DRIVE CONTROL	1	A30103	0302313
2	REEL DRIVE VARIABLE SPEED	1	A30094	0110126
3	PLATFORM CONTROL	1	A48828	0302227
4	CROSS AUGER DRIVE	1	A51210	0302251
5	HULLER DRIVE	1	A48827	1902206
6	THRESHING DRIVE	1	A52702	1924209
7	SILOS OUTLET DRIVE	1	A51148	0223201
8	SILOS OUTLET DRIVE	1	A51163	0302248
9	VENTILATOR	1	A48817	1601103
10	VENTILATOR	1	A48818	1101149
11	STRAW WALKER DRIVE	1	A51197	0301155
12	BEATER VARIATOR	1	A41225	1113175
13	AIR INTAKE DRIVE	1	A54293	1100049
14	AIR INTAKE CONTROL	1	A54294	1100162
15	AUGER DRIVE	1	A51151	1401145
16	HYDRAULIC PUMP DRIVE	1	A55405	0102107

705 A4L

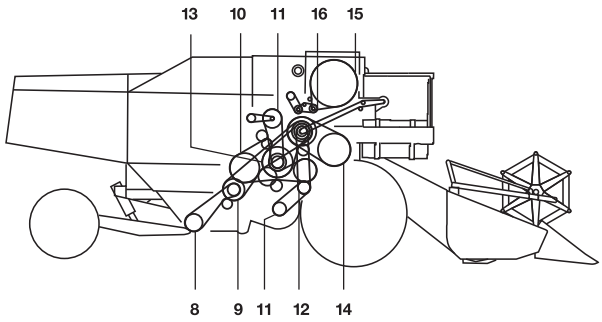

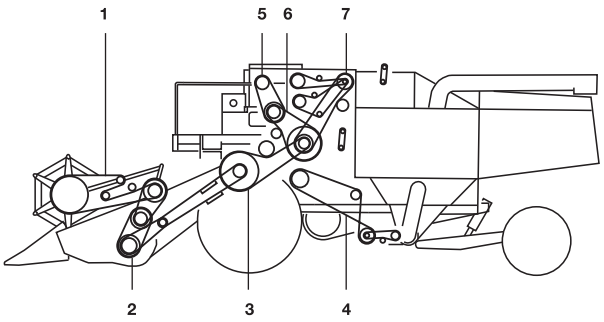

			OE	
1	REEL DRIVE	1	A30103	0302313
2	REEL DRIVE VARIABLE SPEED	1	A30094	0110126
3	PLATFORM	1	A52772	1423267
4	AUGER DRIVE	1	A52771	0302281
5	HYDRAULIC PUMP DRIVE	1	A55405	0102107
6	THRESHING DRUM VARIATOR DRIVE	1	A52702	1924209
7	HULLER DRIVE	1	A57674	1123251
8	UNLOADING AUGER DRIVE	1	A51148	0223201
9	SILOS OUTLET DRIVE	1	A52700	1123301
10	STRAW WALKER DRIVE	1	A61083	1405255
11	VENTILATOR VARIATOR	2	A52733	1401113
12	VENTILATOR VARIATOR	1	A48818	1101149
13	STRAW WALKER DRIVE	1	A51197	0301155
14	BEATER VARIATOR	1	A41225	1113175
15	AIR COMPRESSOR	1	A54294	1100162
16	AIR INTAKE DRIVE	1	A58630	1100051
17	TANK LOADER	1	A52732	0101151

1220

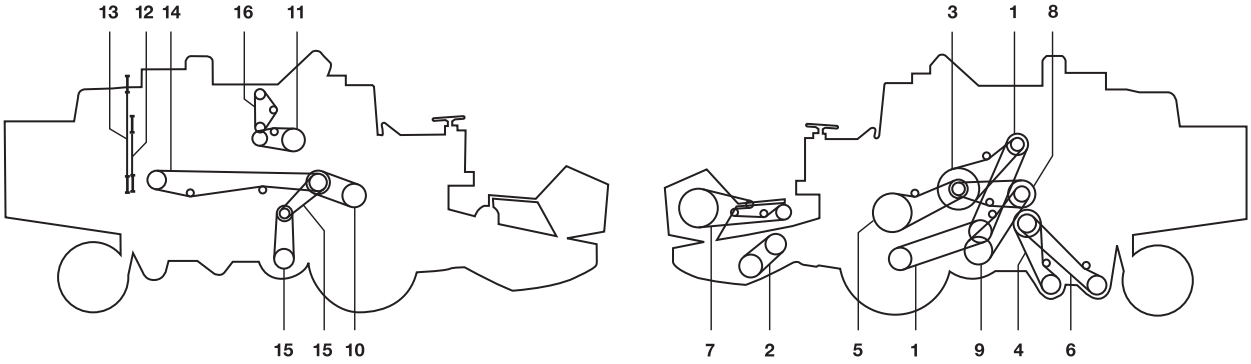

1	FEEDER VARIATOR	2	A15535	0312265
2	REEL DRIVE VARIABLE SPEED	1	A30094	0110126
3	THRESHING DRIVE	1	A30095	0239320
4	BAGGER WITH SILOS	1	A30098	0102189
5	PLATFORM	1	A30104	2002237
6	RETURN DRIVE	1	A30104	2002237
7	REEL DRIVE	1	A37240	0202310
8	STRAW WALKER DRIVE	1	A33379	1118108
9	HOPPER	1	A33384	0302200
11	TANK OUTLET	1	A33380	1118081
12	CLEANING FAN DRIVE	1	A33381	0402170
13	HULLER - HARD WHEAT	1	A33409	0702272
13	HULLER - SOFT WHEAT	1	A33382	0202275
14	CLEANING FAN DRIVE	1	A33383	1902376
15	VENTILATOR	1	A33386	2101142
16	ALTERNATOR AND FAN DRIVE	1	/	0200098

GIAGUARO

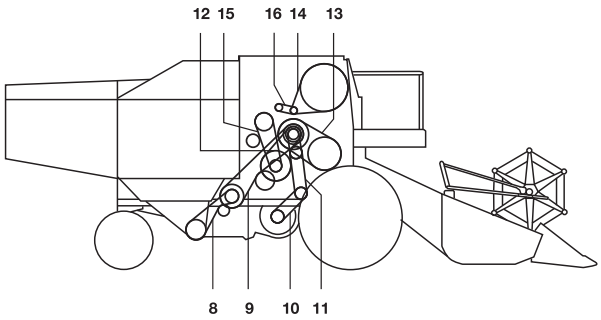

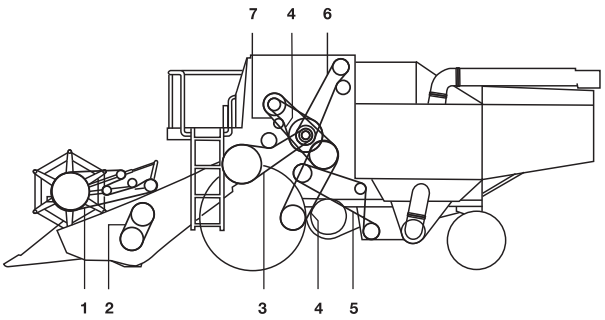

			OE	
1	REEL DRIVE CONTROL	1	A30103	0302313
2	REEL DRIVE VARIABLE SPEED	1	A30094	0110126
3	PLATFORM CONTROL	1	A52772	1423267
5		1	A52771	0302281
6	HULLER CONTROL	1	A52774	1402217
7	THRESHING CONTROL	1	A52702	1924209
8	UNLOADING AUGER DRIVE	1	A51148	0223201
9	SILOS OUTLET DRIVE	1	A52700	1123301
10	LOAD BODY VENTILATOR (LOWER)	1	A52733	1401113
11	CONVEYOR	1	A48818	1101149
12	STRAW SHAKER	1	A51197	0301155
13	BEATER VARIATOR	1	A41225	1113175
14	AIR INTAKE CONTROL - MANUAL	1	A54294	1100162
15	SILOS OUTLET AUGER CONTROL	1	A52732	0101151
16	AIR INTAKE DRIVE - MANUAL	1	A54293	1100049

LINCE

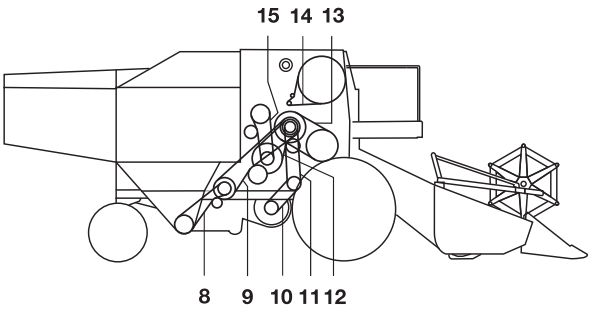

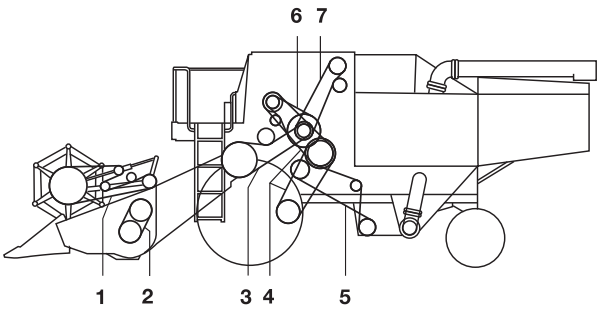

			OE	
1	REEL DRIVE CONTROL	1	A30103	0302313
2	REEL DRIVE VARIABLE SPEED	1	A30094	0110126
3	PLATFORM CONTROL	1	A48828	0302227
5	AUGER CONTROL (LOWER)	1	A51210	0302251
6	THRESHING CONTROL	1	A48826	1524207
7	HULLER CONTROL	1	A48827	1902206
8	UNLOADING AUGER DRIVE	1	A51148	0223201
9	SILOS OUTLET DRIVE	1	A51163	0302248
10	FAN DRIVE VARIABLE SPEED LOWER RPM	1	A48817	1601103
11	CONVEYOR VARIATOR	1	A48818	1101149
12	STRAW WALKER DRIVE	1	A51197	0301155
14	AIR INTAKE CONTROL - MANUAL	1	A51689	1100172
15	LOADING AUGER	1	A51191	2001143

M 160

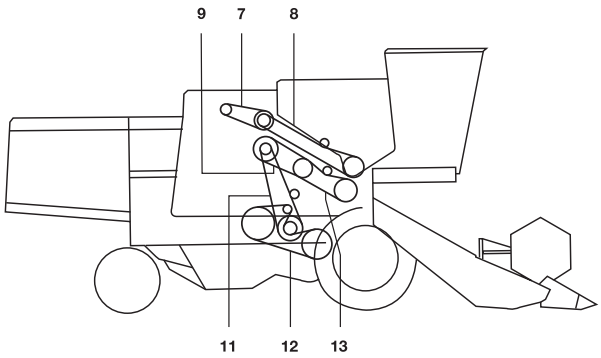

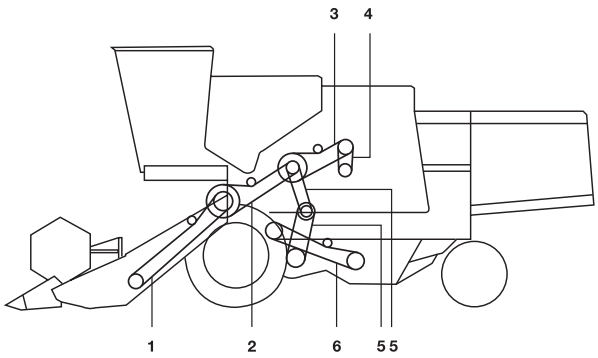

			OE	
1	BAR CONTROL	1	B66261	1124364
2	PLATFORM CONTROL	1	B63962	1124342
3	THRESHING CONTROL	1	A63957	0325290 EE-TECH
4	HYDRAULIC PUMP DRIVE	1	A67319	0201112
5	FAN DRIVE VARIABLE SPEED	2	A64164	0402170
6	SLEEVE DRIVE	1	A67126	2101138
7	SILOS OUTLET DRIVE	1	A57674	1123251
8	SILOS OUTLET DRIVE	1	A64147	2023212
9	BEATER DRIVE	1	A41225	1113175
10	CONVEYOR	1	B63961	1125200
11	HOPPER	1	A63960	0202209
12	STRAW SHAKER	1	A61083	1405255
13	AIR COMPRESSOR	1	A67125	1901098
14	RADIATOR FAN DRIVE	1	B64684	1101573
15	LOAD BODY DRIVE	1	A63958	0702272

RECORD - RECORD S

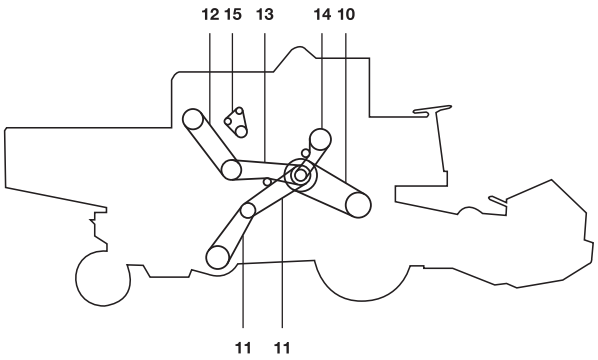

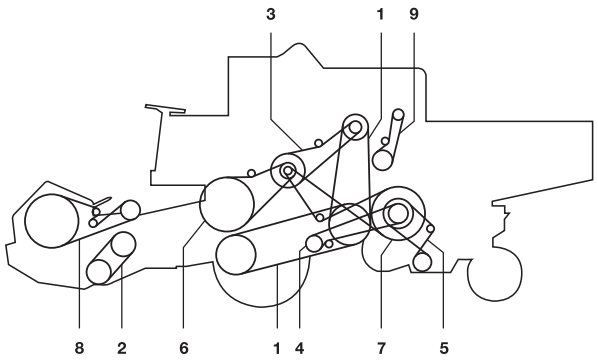

			OE	
1	TRACTION DRIVE	2	A15535	0312265
2	REEL DRIVE VARIABLE SPEED	1	A30094	0110126
3	THRESHING DRIVE	1	A30096	2539303
4	HOPPER	1	A30100	0302197
5	BAGGING AUGER	1	A30101	0202235
6	PLATFORM	1	A30102	0302251
7	STRAW SHAKER	1	A30107	0702295
8	REEL DRIVE	1	A37240	0202310
9	BAGGER CLEANER BASE	1	A41043	2501256
11	LOAD BODY VENTILATOR	2	A30097	2001162
12	HULLER DRIVE	1	A30098	0102189
13	HULLER DRIVE	1	A30099	0202209
14	UNLOADING AUGER DRIVE	1	A30105	0302136
15	ALTERNATOR DRIVE	1	/	0201102

TIGRE (FROM 1972)

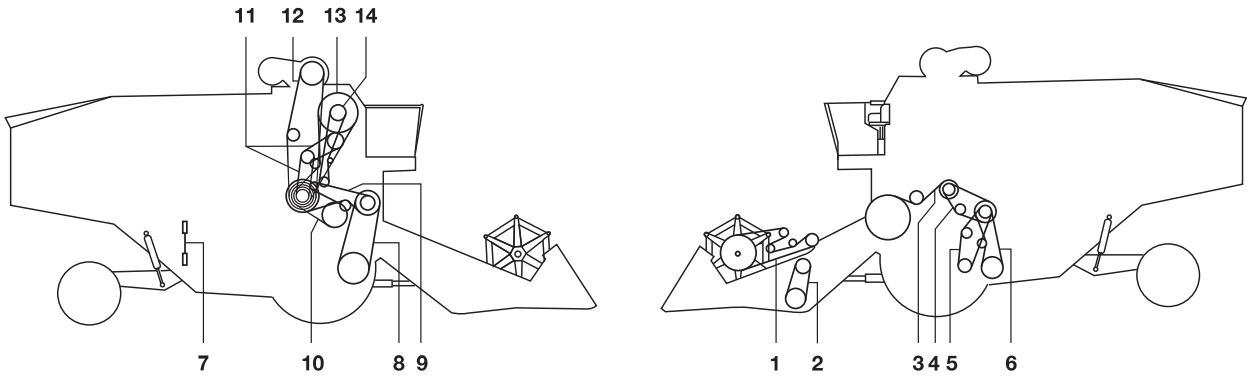

			OE	
1	REEL DRIVE CONTROL	1	A30103	0302313
2	REEL DRIVE VARIABLE SPEED	1	A30094	0110126
3	PLATFORM CONTROL	1	B41228	0302258
4	STRAW WALKER DRIVE	1	A41228	1118090
5	VENTILATOR CONTROL (LOWER)	1	B46183	1401204
6	AUGER CONTROL (LOWER)	1	A46184	0202187
7	SILOS OUTLET CONTROL	1	A41223	1637240
8	FEED CONTROL VARIABLE SPEED	1	A41221	1113237
9	THRESHING DRIVE	1	A41222	1125260
10	BEATER VARIATOR	1	A41225	1113175
11	VENTILATOR (UPPER)	1	B42872	0102112
12	HULLER CONTROL	1	B51243	1118157
13	CONTROL BOX (UPPER)	1	B42871	0402264
14	UNLOADING AUGER DRIVE	1	A42869	2002190
15	AUGER CONTROL (UPPER)	1	B47212	1118153

TIGRE & PANTERA (UNTIL 1971)

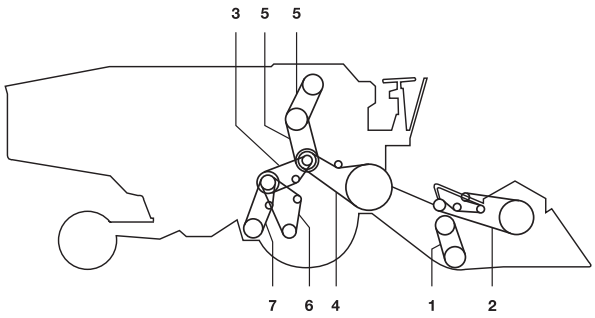

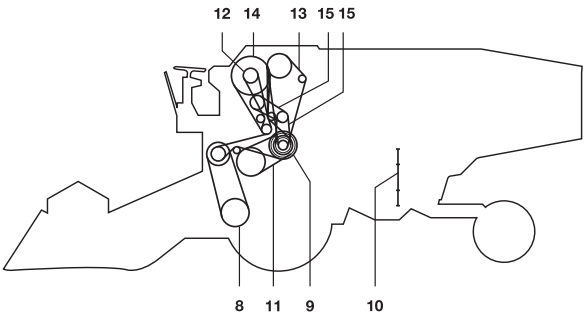

			OE	
1	REEL DRIVE VARIABLE SPEED	1	A30094	0110126
2	REEL DRIVE	1	A30103	0302313
3	STRAW WALKER DRIVE	1	A41226	1118090
4	PLATFORM	1	A41228	1118090
5	HULLER DRIVE	1	B42873	1118105
6	VENTILATOR	1	B46183	1401204
7	AUGER (LOWER)	1	A46184	0202187
8	FEEDER VARIATOR	1	A41221	1113237
9	THRESHING DRIVE	1	A41222	1125260
10	SILOS OUTLET DRIVE	1	A41223	1637240
11	BEATER VARIATOR	1	A41225	1113175
12	PLANTER CROSS AUGER	1	A42869	2002190
13	CROSS AUGER DRIVE (UPPER)	1	B42870	1118132
14	HOPPER	1	B42871	0402264
15	LOAD BODY VENTILATOR	1	B42872	0102112
16	SUPPLY AND HULLER AUGER	1	B47212	1118153

GIGANT

			OE	
1		1	9724-11280	0213197
2		1	9724-11281	0315203
3		3	9704-11283	0101285
4		1	9700-11284	0201215
5		1	9700-11285	1201153
6		1	9725-11287	1401248
7		1	9724-11289	0130234
8		1	9704-11290	1901283
9		1	9704-11291	2101138
10		1	9724-11292	0201264
12		1	9704-11512	0201177

REKORD

			OE	
4		1	9725-11382	0101222
6		1	9700-11591	1254331
7		1	9700-11593	0101085
8		1	9700-11594	0302241
9		1	9700-11595	0102176
10		2	9700-11596	1301116

SUPER

			OE	
7		1	9725-11382	0101222
10		1	9700-11591	1254331
12		1	9700-11593	0101085
13		1	9700-11594	0302241
14		1	9700-11595	0102176
15		2	9700-11596	1301116

TC 59

			OE	
1		1	84021588	0300201
2		1	84023912	0300260
3		1	84995734	1272212
4		1	84995733	1272282
5		1	84026042	0323254 EE-TECH
6		1	84996133	0423318 EE-TECH
7		1	9818873	0325248
8		1	825117	1225316
9		1	9515076	0310157
10		1	9515075	0310193

Z040 - Z050 SUPER

			OE	
1	REEL DRIVE	1	5056/766	1454423
2	REEL DRIVE VARIABLE SPEED	1	5040/42-011/0	0110126
3	JACKSHAFT HEADER	1	5040/42-010/0	2330335
4	JACKSHAFT - FEEDER	1	5040/42-009/0	0330293
5	BEATER (REAR)	1	5040/42-013/0	0381385
6	ALTERNATOR AND FAN DRIVE	1	/	/
7	HYDRAULIC PUMP DRIVE	1	5040/42-008/0	1401110
8	TRACTION VARIATOR DRIVE	1	5040/42-015/0	0312263
9	JACKSHAFT - SHAKER SHOE	1	9700-11594	0302241
10	ELEVATOR (UPPER) GRAIN	1	9700-11592	0130272
11	ELEVATOR (LOWER) GRAIN	1	5056/759	0202172
12	TANK UNLOADER AUGER	1	5040/42-014/0	0330188
13	TAILINGS AUGER (UPPER)	1	5056/757	2601082
14	SHAKER SHOE DRIVE	1	9700-11591	1254331
15	FAN DRIVE VARIABLE SPEED	1	5050/92-038/0	2954256
16	THRESHING DRUM VARIATOR DRIVE	1	5040/42-012/0	0213186

Z 110 BS

			OE	
1		8	HB-1400	0401111
2		1	51101255970	1230485
3		1	51101131525	0200118
4		1	51101131570	1900121
5		1	51101132800	0300212
6		1	51101171335	2601106
7		1	51101171375	0201109
8		1	51101171750	2101138
9		1	51101171981	0301155
10		1	51101172438	1901188
11		1	51101171670	1223167
12		1	51102173550	0223304
13		1	51651175000	1523417 EE-TECH
14		1	51103172120	0124204
15		1	51103172380	1224221
16		1	51103172650	2024241 EE-TECH
17		1	51103173062	1224272 EE-TECH
18		1	51103173220	0324284
19		1	51104172270	1225216
20		1	51104173940	1225340
21		1	51651222360	0102184
22		1	51101222525	0702198
23		1	51101321750	0210149
24		1	51101622375	0315204

Z 115

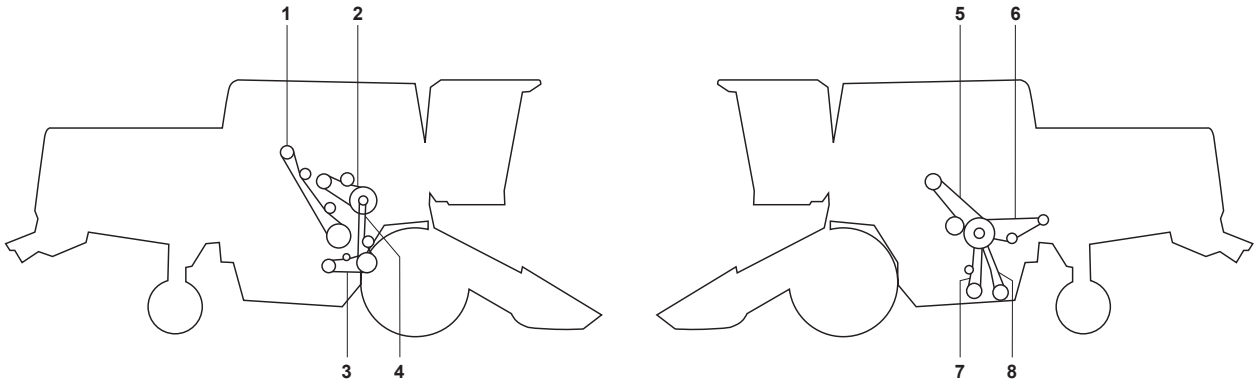

			OE	
1	TRACTION GEAR	1	51653173762	0724325 EE-TECH
2		1	51654172420	1425228
3		1	51651222010	☎
4		1	51651222864	☎
5		1	51651223550	☎
6		1	51651173900	☎
7		1	51651172450	☎
8	GRAIN CONTAINER AUGER	1	51652172500	0323229

Z 140 NORDIC

			OE	
1		1	613116	0100083
2		1	613131	1200149
3		1	614225	0101151
4		1	614150	1401234
5		1	614152	0101242
6		1	614152	0101242
7		1	614169	1501398
8		1	659065	2023280 EE-TECH
9		1	615109	0202139
10		1	615116	1602150
11		1	614136	2001162
12		1	615124	0302197
13		1	615128	0202209
14		1	615179	0702225
15		1	615146	1402336
16		1	615147	1902376
17		1	619170	0110162

503 - 504 - 505

			OE	Gates
1	VENTILATOR	1	92101	1901115
2	VENTILATOR AND CLEANER	1	93068	0301183
3	DISTRIBUTOR	1	92124	0301243
4	ASPIRATOR	1	93074	2301262
5	SILOS OUTLET DRIVE	1	93066	0102125
6	ELEVATOR DRIVE GRAIN	1	92123	0402155
7	ELEVATOR DRIVE GRAIN	1	92121	0302197
8	BAR CONTROL	1	93072	0202245
9	BAR CONTROL	1	92119	0302248
10	CLEANING FAN DRIVE	1	93067	0202320
11	CLEANING FAN DRIVE	1	98583	0302326
12	STRAW SHAKER	1	92122	1402479
13	SPREADER DRIVE	1	93071	0302512
14	COMPRESSOR DRIVE	1	93064	1302669
15	REEL DRIVE VARIABLE SPEED	1	920093065	0210103
16	FEEDER VARIATOR	1	92116	1311199
17	FEEDER VARIATOR	1	98577	1311198
18	BEATER CONTROL	1	203923	2639325

603

			OE	Gates
1	ENGINE FAN DRIVE	1	20098575	1300092
2	VENTILATOR	1	20092101	1301116
3	VENTILATION (SECONDARY)	1	20092124	0101242
4	ASPIRATOR	1	20093074	0201264
5	GEAR BOX	1	20001730	0323233 EE-TECH
6	OUTLET	1	20093066	0102129
7	ELEVATOR DRIVE UNIT	1	20092123	0902157
8	AWNER SHAFT	1	20093069	1402158
9	RETURN ELEVATOR DRIVE	1	20092121	1902204
10	BAR CONTROL	1	20093072	0302248
11	STRAW SHAKER	1	20092122	1402479
12	THRESHING CONTROL	1	10233923	1339327

604

			OE	
1	VENTILATOR	1	20092101	1301116
2	HULLER HOPPER	1	20093068	0301183
3	VENTILATION (SECONDARY)	1	20092124	0101242
4	DUST EXTRACTOR	1	20093074	0201264
5	GEAR BOX	1	20001730	0323233 EE-TECH
6	OUTLET CONTROL	1	20093066	0102129
7	ELEVATOR DRIVE GRAIN	1	20092123	0902157
8	AWNER CONTROL	1	20093069	1402158
9	RETURN ELEVATOR DRIVE	1	20092121	1902204
10	BAR CONTROL	1	20093072	0302248
11	HULLER CONTROL	1	20098583	0302326
12	STRAW SHAKER	1	20092122	1402479
13	ENGINE FAN DRIVE	1	20001731	1472236
14	ENGINE FAN DRIVE	1	20001736	0172219
15	THRESHING CONTROL	1	910203923	2639325

605

			OE	
1	VENTILATOR	1	20092101	1301116
2	HULLER CONTROL	1	20093068	0301183
3	VENTILATION (SECONDARY)	1	20092124	0101242
4	DUST EXTRACTOR	1	20003074	0201264
5	GEAR BOX	1	20001729	0323229
6	THRESHING DRIVE	1	20098584	2670384
7	OUTLET	1	20093066	0102129
8	ELEVATOR DRIVE UNIT	1	20092123	0902157
9	RETURN ELEVATOR DRIVE	1	20092121	1902204
10	BAR CONTROL	1	20093072	0302248
11	REEL DRIVE CONTROL	1	20092119	0302248
12	HULLER CONTROL	1	20098583	0302326
13	STRAW SHAKER	1	20092122	1402479
14	REEL DRIVE VARIABLE SPEED	1	920093065	0210103
15	ENGINE FAN DRIVE	1	20001731	1472236

640

			OE	
3		1	20092101	1301116
5		1	920093065	0210103
7		1	20092120	0402264
9		1	20001733	1319233
12		1	20012976	2027370
26		1	20098592	0101151
27		1	20002102	2603269
29		1	20002122	0173227

650 - 700

			OE	
4		1	20092101	1301116
7		1	920093065	0210103
9		1	20092120	0402264
11		1	20001733	1319233
14		1	20012976	2027370
20		1	20001735	1319233
30		1	20002102	2603269
31		1	20098592	0101151
33		1	20002122	0173227

701 - 701 B

			OE	
1	FEED HOPPER RIGHT	1	20002106	1430198
2	FEEDER HOPPER OUTLET	1	20002105	1330221
3	ENGINE VARIATOR	1	20001732	0201096
4	DUST ASPIRATOR	1	20098592	0101151
5	TRACTION - NEW SERIES	1	20001744	0227262
6	AWNER CONTROL	1	20093069	1402158
7	PICK UP DEVICE	1	20092120	0402264
8		1	20001738	0302281
9	REEL DRIVE CONTROL	1	920093065	0210103
10	BAR CONTROL	1	20002102	2603269
11	AWNER CONTROL	1	20002103	1303384
12		1	20002115	1303462
13	VENTILATOR	1	20002118	1472236
14		1	20001733	1319233
15	BLADE CONTROL	1	20002122	0173227
16	TRACTION - OLD SERIES	2	20001727	1513221

750 - 755 - 800

			OE	
4		1	20092101	1301116
5		1	920093065	0210103
7		1	20092120	0402264
9		1	20001733	1319233
12		1	20012976	2027370
18		1	20001736	0172219
28		1	20002102	2603269
29		1	20098592	0101151
31		1	20002122	0173227

801 - 801 B

			OE	
1	OUTLET SCREW CONTROL	1	20.002.106.100	1430198
2	OUTLET SCREW CONTROL	1	20.002.105.100	1430213
3	ENGINE COOLER 6-372	1	20.002.118.100	1472236
4	HYDROSTATIC CONTROL	1	20.002.104.100	1371231
5	THRESHING CONTROL	1	20.098.587.100	1371317
6	VENTILATOR	1	20.098.592.199	1401144
7	LIFTING SCREW CONTROL	1	20.098.590.100	1901251
8	AUGER CONTROL	1	20.093.069.100	1402158
9	REEL DRIVE CONTROL	1	20.092.120.100	0402264
10	SCREW DRIVE CONTROL	1	20.098.593.100	0402264
11	CUTTERBAR DRIVE	1	20.002.102.100	2603269
12	HULLER DRIVE	1	20.002.103.100	1303384
13	REEL DRIVE VARIABLE SPEED	1	20.093.065.100	0210103
14	BEATER VARIATOR	1	20098598	0213197
15	ENGINE COOLER T6-354	1	20002124	1472236

2580 - 258

			OE	
1	VENTILATOR	1	92113	2001178
2	FEEDER HOPPER	1	93028	0102174
3	BAR CONTROL	1	92100	0702225
4	STRAW SHAKER	1	92120	0402264
5	STRAW SPREADER DRIVE	1	92115	0202320
6	COMPRESSOR DRIVE	1	92112	1302519
7	COMPRESSOR DRIVE	1	92117	1302540
8	VENTILATION (SECONDARY)	1	20098580	0202626
9	ENGINE FAN DRIVE	1	93034	1383235
10	TRACTION DRIVE	1	92114	0311182
11	BEATER DRIVE	1	101735	0339302

CASE INTL. HARVESTER

8-41

			OE	
1	FAN DRIVE	1	793037R2	0105250
2	MAIN DRIVE	1	793051R2	0785435
3	STRAW WALKER DRIVE	1	793094R2	0102129
4	PLATFORM DRIVE	1	793398R2	0302224
5	TRACTION DRIVE	1	793417R1	1402291
6	TRACTION VARIATOR DRIVE	1	794464R2	0711204
7	RETURN AUGER DRIVE	1	553456R2	1901098
8	UNLOADING DRIVE	1	790522R1	1602150
9	RETURN ELEVATOR DRIVE	1	794484R1	1902206

8-51

			OE	
1	FEEDER AUGER - REEL VARIATOR DRIVE	1	1408855R1	0702212
2	PLATFORM DRIVE	1	3155127R1	1403222
2	PLATFORM DRIVE	1	793398R2	0302224
3	MAIN DRIVE	4	1408761R1	0101287
4	JACKSHAFT - TRACTION DRIVE	1	3155178R1	0302302
5	TRACTION VARIATOR DRIVE	1	1409652R1	0211203
6	RETURN AUGER - FAN DRIVE	1	553456R2	1901098
7	TANK UNLOADER DRIVE	1	3155177R1	2002211
8	RETURN AUGER DRIVE	1	553456R2	1901098
9	RETURN ELEVATOR DRIVE	1	790522R1	1602150
10	THRESHING DRUM VARIATOR DRIVE	1	3156220R92	0112175
11	HYDRAULIC PUMP DRIVE	1	769482R1	0172208

8-61-321

			OE	
1	FEEDER AUGER - REEL VARIATOR DRIVE	1	1407123R1	0110162
2	JACKSHAFT - PLATFORM DRIVE	1	1408855R1	0702212
2	JACKSHAFT - PLATFORM DRIVE	1	1410279R1	0302227
3	PLATFORM DRIVE	1	3155127R1	1403222
4	MAIN DRIVE	4	1408761R1	0101287
5	JACKSHAFT - TRACTION DRIVE	1	1410106R1	1403307
7	RETURN AUGER - FAN DRIVE	1	1408840R1	0705245
8	TANK UNLOADER DRIVE	1	1407324R1	0302220
9	RETURN AUGER DRIVE	1	553456R2	1901098
10	RETURN ELEVATOR DRIVE	1	790522R1	1602150
11	THRESHING DRUM VARIATOR DRIVE	1	3156220R92	0112175
12	HYDRAULIC PUMP DRIVE	1	769482R1	0172208

CASE INTL. HARVESTER

8-71-431

			OE	
1	FEEDER AUGER - REEL VARIATOR DRIVE	1	1407123R1	0110162
2	JACKSHAFT - PLATFORM DRIVE	1	1408855R1	0702212
2	JACKSHAFT - PLATFORM DRIVE	1	1410279R1	0302227
3	PLATFORM DRIVE	1	1410462R1	0203238
4	MAIN DRIVE	4	1407035R1	0501273
5	JACKSHAFT - TRACTION DRIVE	1	1410106R1	1403307
7	RETURN AUGER - FAN DRIVE	1	1408840R1	0705245
7	RETURN AUGER - FAN DRIVE	1	3158811R1	0105250
8	TANK UNLOADER DRIVE	1	1407324R1	0302220
9	RETURN AUGER DRIVE	1	726278R1	1901094
10	RETURN ELEVATOR DRIVE	1	790522R1	1602150
11	THRESHING DRUM VARIATOR DRIVE	1	3156221R92	0112189
12	HYDRAULIC PUMP DRIVE	1	769482R1	0172208

8-91-531

			OE	
1	FEEDER AUGER - REEL VARIATOR DRIVE	1	1407123R1	0110162
2	JACKSHAFT - PLATFORM DRIVE	1	3158455R1	0130307
3	PLATFORM DRIVE	1	1410462R1	0203238
4	MAIN DRIVE	4	1407035R1	0501273
5	JACKSHAFT - TRACTION DRIVE	1	3157094R1	0203328
7	RETURN AUGER - FAN DRIVE	1	3157600R1	1405255
8	TANK UNLOADER DRIVE	1	3157994R1	1602254
9	RETURN AUGER DRIVE	1	726278R1	1901094
10	RETURN ELEVATOR DRIVE	1	790522R1	1602150
11	THRESHING DRUM VARIATOR DRIVE	1	3156221R92	0112189
11	THRESHING DRUM VARIATOR DRIVE	1	3169965R91	☎
12	HYDRAULIC PUMP DRIVE	1	3159827R1	0172208

30

			OE	
2	AUGER DRIVE (CROSS) (SERIAL NR. 877L - ...)	1	135462C1	2001178
3	AUGER DRIVE (SIDE)	1	452864R1	2602125
4	FAN DRIVE (OVERHEAD BASKET)	1	662901R1	0201112
5	MAIN DRIVE (LEFT HAND)	1	672177R1	0402155
6	MAIN DRIVE (RIGHT HAND)	1	672178R1	0102163

CASE INTL. HARVESTER

80

			OE	
1	ELEVATOR AUGER DRIVE (TWO USED)	1	565565R1	0301324
2	ELEVATOR CHOKE INDICATOR DRIVE	1	209038C1	1900121
3	SIDE AUGER DRIVE (TWO USED)	1	668287R2	2002167
6	MAIN DRIVE FARMALL 656 TRACTOR 1000 (RIGHT HAND)	1	158797C1	0702198
7	MAIN DRIVE FARMALL 400 450 460 560 (RIGHT HAND)	1	191305C1	0102216

85

			OE	
3	MAIN DRIVE FARMALL 700 800 900 SERIES (LEFT HAND)	1	200380C1	0202187
4	MAIN DRIVE FARMALL 700 800 900 SERIES (RIGHT HAND)	1	200381C2	0302197
5	MAIN DRIVE FARMALL 656 TRACTOR 1000 (RIGHT HAND)	1	158797C1	0702198
6	MAIN DRIVE FARMALL 400 450 460 560 (RIGHT HAND)	1	191305C1	0102216
8	FAN DRIVE	1	672177R1	0402155

91

			OE	
2	ELEVATOR CHOKE INDICATOR DRIVE	1	209038C1	1900121
4	MAIN DRIVE (LEFT HAND)	1	208885C1	☎
6	FAN DRIVE	1	672177R1	0402155

95

			OE	
1	ELEVATOR AUGER DRIVE (TWO USED)	1	209002C1	0701268
2	ELEVATOR AUGER COUNTERSHAFT	1	160173C1	0102184
3	ELEVATOR CHOKE INDICATOR DRIVE	1	209038C1	1900121
4	CROSS AUGER DRIVE	1	203651C1	0201102
5	COUNTERSHAFT - CROSS AUGER	1	203644C1	1401180
6	FINGER HARVESTER HEAD UNIT DRIVE	1	559064R1	0202285
7	BRUSH ROLL UNIT GEAR BOX DRIVE	1	203658C1	0302154
8	AUXILIARY DRIVE COUNTERSHAFT	1	203612C1	0702225
10	ALTERNATOR, FAN AND WATERPUMP DRIVE	1	59969C91	0372255

CASE INTL. HARVESTER

100 BALANCED

			OE	
1	KNIFE DRIVE (900 RPM PULLEY) 540 RPM TRACTOR	1	562088R1	0302197
3	KNIFE DRIVE (1000 RPM PULLEY)	1	558141R1	0702199

234

			OE	
1	ELEVATOR FAN DRIVE	1	937806R1	0101311
2	SHELLER FAN DRIVE (SERIAL NR. 1991-2366)	1	588894R1	1901115
3	SHELLER FAN DRIVE (SERIAL NR. 1991-2366)	1	23898K	0301117

414 - 420

			OE	
1	FAN DRIVE	1	666390R1	0102216
2	MAIN DRIVE	1	665970R1	0703182
3	ALTERNATOR, FAN AND WATERPUMP DRIVE	1	274705R1	☎
5	ALTERNATOR, FAN AND WATERPUMP DRIVE (420 WITHOUT SERIAL NR. CH1372F)	1	403617R2	0172225
7	ALTERNATOR, FAN AND WATERPUMP DRIVE (420 WITHOUT SERIAL NR. CH1372F)	1	379966R1	1472238

416 - 422

			OE	
1	FAN DRIVE	1	666390R1	0102216
2	MAIN DRIVE	1	665970R1	0703182
3	ALTERNATOR, FAN AND WATERPUMP DRIVE	1	403617R1	0172225
4	ALTERNATOR, FAN AND WATERPUMP DRIVE	1	379966R2	1472238

CASE INTL. HARVESTER

500 - 501

			OE	
1	FAN DRIVE COUNTERSHAFT (FARMALL SUPER C)	1	657411R1	0201173
2	FAN DRIVE COUNTERSHAFT (FARMALL 240 TRACTOR)	1	665299R1	2001178
3	FAN DRIVE (SINGLE FAN)	1	11466R	0101107
4	MAIN DRIVE (SINGLE FAN) FARMALL 404 TRACTOR	1	665398R1	0703213
5	MAIN DRIVE (DUAL FAN) FARMALL SUPER H.M-TA	1	668057R1	0703224
6	TRACTORS (WITHOUT TRANSMISSION DRIVEN PTO)	1	670144R1	☎
7	INDEPENDENT PTO (FARMALL 706.806 TRACTOR)	1	670278R1	0703198

502

			OE	
1	MAIN DRIVE (FARMALL SUPER M-TA.400.450)	1	667068R1	☎
2	MAIN DRIVE (FARMALL 706. 806 TRACTORS)	1	670282R1	☎
3	FAN DRIVE (SINGLE FAN)	1	11466R	0101107
4	MAIN DRIVE (SINGLE FAN) FARMALL 404 TRACTOR	1	665398R1	0703213
5	MAIN DRIVE (DUAL FAN) FARMALL SUPER H.M-TA	1	668057R1	0703224
6	TRACTORS (WITH TRANSMISSION DRIVEN PTO)	1	670144R1	☎
9	INDEPENDENT PTO (FARMALL 706.806 TRACTOR)	1	670278R1	0703198

502H

			OE	
1	MAIN DRIVE (FARMALL M AND SUPER M TRACTOR)	1	668496R1	☎
2	MAIN DRIVE (WITHOUT TRANSMISSION DRIVEN PTO)	1	668057R1	0703224

616 - 622

			OE	
1	DRUM DRIVE	1	672974R2	0810190
2	PROPULSION VARIABLE SPEED DRIVE	1	673026R3	1513209
3	FAN DRIVE	1	201092C1	0301147
4	ALTERNATOR AND WATERPUMP DRIVE	1	397175R1	0172225
5	ALTERNATOR AND WATERPUMP DRIVE	1	395539R1	0372255

CASE INTL. HARVESTER

715

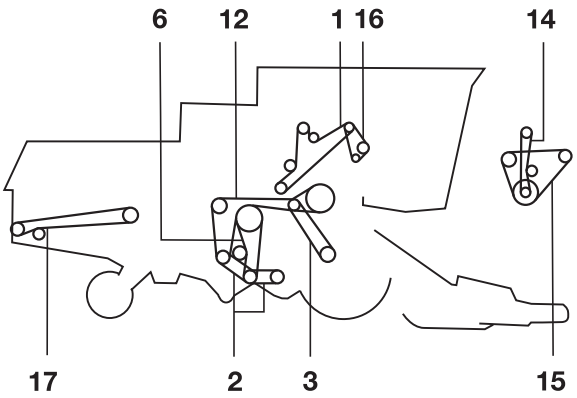

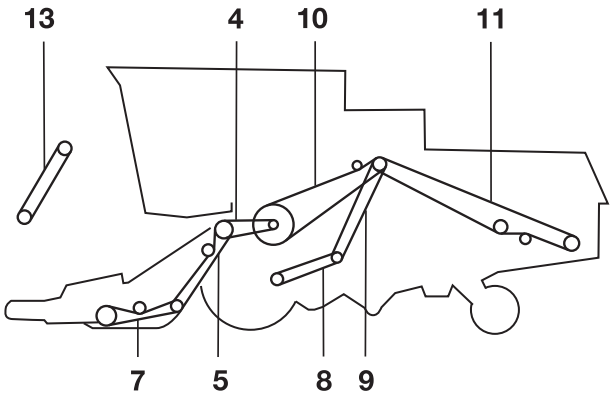

			OE	
0	ALTERNATOR, FAN AND WATERPUMP IH D310	1	3955539R1	☎
0	AIR CONDITIONING COMPRESSOR DRIVE	1	936331R1	0372245
1	GRAIN TANK EXT WITH RAISED LEVELLING AUGER	1	150433C1	☎
1	ELEVATOR DRIVE WITHOUT RAISED LEVELLING AUGER	1	937928R1	0305315
1	ELEVATOR DRIVE WITH RAISED LEVELLING AUGER	1	937929R1	0102328
2	FAN DRIVE	2	170954C11	☎
2	FAN DRIVE	1	178936C1	☎
3	SHAKER SHAFT DRIVE	1	188716C1	0302220
4	FEEDER DRIVE REGULAR	1	937932R1	☎
5	FEEDER JACKSHAFT DRIVE	1	176566C1	0202332
5	FEEDER JACKSHAFT DRIVE X2 RICE ONLY	1	176577C1	1402373
5	FEEDER JACKSHAFT DRIVE (RICE)	1	176657C1	☎
6	UNLOADING DRIVE	1	559064R1	0202285
6	HYDROSTATIC UNLOADING DRIVE	1	1656676C1	☎
7	AUGER AND KNIFE DRIVE (112)	1	191305C1	0102216
7	AUGER AND KNIFE DRIVE (150)	1	559064R1	0202285
7	AUGER AND KNIFE DRIVE (102)	1	178019C1	0302197
8	PROPULSION DRIVE	1	173110C1	0711207
9	PROPULSION JACKSHAFT DRIVE	1	150436C2	☎
10	SEPARATOR DRIVE	1	171226C1	0724370 EE-TECH
11	STRAW CHOPPER DRIVE	1	174614C2	1402479
12	STRAW WALKER - FAN JACKSHAFT	1	170948C1	1468350
13	HYDROSTATIC UNLOADING DRIVE JACKSHAFT	1	175545C1	0301301
13	UNLOADING JACKSHAFT DRIVE	1	179317C2	2501308
14	CYLINDER DRIVE VARIABLE SPEED (PRIMARY)	1	171101C2	2625231 EE-TECH
15	CYLINDER DRIVE VARIABLE SPEED	1	171130C1	1513240
16	TAILINGS AUGER DRIVE	1	627297R1	1401081
17	STRAW SPREADER DRIVE	1	589622R1	1401412

CASE INTL. HARVESTER

730

			OE	
1	REEL DRIVE VARIABLE SPEED	1	Z20459	0809104
1	KNIFE DRIVE	1	188716C1	0302220
2	REEL DRIVE	1	Z20562	0202305
2	REEL DRIVE (FRONT) (PRIMARY)	1	132374C1	0701268
3	DRAPER COUNTERSHAFT DRIVE	1	1336591C1	☎
3	HYDRAULIC PUMP DRIVE	1	Z21254	0200104
4	MAIN DRIVE	1	1276589C1	0202310
4	UNLOADING SYSTEM	1	Z21400	0102137
5	SICKLE KNIFE DRIVE	1	Z21501	0203267
5	DRAPER DRIVE WIDE OPENING	1	617910R1	0301147
5	SICKLE KNIFE DRIVE	1	Z21500	0203270
6	STRAW ELEVATOR DRIVE	1	Z21501	0203267
6	DRAPER DRIVE NARROW OPENING	1	1276707C1	0201177
7	THRESHING DRUM VARIATOR DRIVE	1	Z22648	0239320
8	TRACTION DRIVE	1	P40058	0212267
9	FAN DRIVE VARIABLE SPEED	1	Z20459	0809104
10	FAN DRIVE	1	Z20703	0102231
11	ROTARY SCREEN - ELEVATOR	1	Z20743	0202168
12	CYLINDER DRIVE	1	Z20823	0713182
13	HYDRAULIC PUMP DRIVE - ENGINE	1	Z22208	0172230

750

			OE	
1	KNIFE DRIVE	1	188716C1	0302220
2	REEL DRIVE (FRONT) (PRIMARY)	1	132374C1	0701268
3	REEL DRIVE (REAR) (PRIMARY)	1	135594C1	1401378
4	REEL DRIVE (FRONT)	1	617910R1	0301147
5	DRAPER COUNTERSHAFT DRIVE	1	1336591C1	☎
6	MAIN DRIVE	1	1276589C1	0202310
8	MAIN DRIVE DUPLEX (REAR)	1	1276634C1	1401110
9	DRAPER DRIVE WIDE OPENING	1	617910C1	☎
10	DRAPER DRIVE NARROW OPENING	1	1276707C1	0201177
11	DRAPER DRIVE RIGHT HAND (REAR)	1	610521C1	0301141
12	DRAPER DRIVE LEFT HAND (REAR)	1	492103C1	0172201

CASE INTL. HARVESTER

782

			OE	
1	DRUM DRIVE (2 USED)	2	210185C1	0703166
2	FAN DRIVE	1	214522C1	0768273
4	RADIATOR FAN DRIVE - ALTERNATOR	1	130724C91	0372268
5	AIR CONDITIONING COMPRESSOR DRIVE	1	280210C2	1472238

810

			OE	
1	KNIFE DRIVE - 500 CPM FOR 30 FOOT	1	187415C2	2002211
2	KNIFE DRIVE - 600 CPM REF TO 1300031 C91	1	552747R2	☎
3	KNIFE DRIVE - 500 CPM 103-25/32-INCH OC	1	178019C1	0302197
4	KNIFE DRIVE - 600 CPM 20 FOOT 600 MM AUGER	1	1319245C1	1902206
6	KNIFE DRIVE - DRAPER 150-3/8-INCH	1	559064R1	0202285

CASE INTL. HARVESTER

815

			OE	
0	PLATFORM JACKSHAFT DRIVE BOLT ATT. FEEDER	1	150816C1	1403323
0	ROTARY AIR SCREEN DRIVE	1	168725C1	0100160
0	ROTARY AIR SCREEN DRIVE	1	172360C1	0100159
0	FEEDER FAST SPEED FOR BOLT ATT. FEEDER	1	633728R2	0203328
1	COMPRESSOR DRIVE (DIESEL ENGINE)	1	65337C2	0172208
2	CYLINDER DRIVE	1	174509C1	0324299
3	FEEDER DRIVE BOLT ATT. FEEDER	1	165053C2	☎
3	FEEDER JACKSHAFT DRIVE	1	176565C1	0302326
3	FEEDER JACKSHAFT DRIVE	1	176566C1	0202332
3	FEEDER JACKSHAFT DRIVE	1	176567C1	0302326
4	HYDRAULIC REEL PUMP DRIVE (GAS ENGINE)	1	178763C1	☎
5	KNIFE DRIVE	1	178019C1	0302197
6	SEPARATOR DRIVE (GAS ENGINE)	1	166598C2	0724423
6	SEPARATOR DRIVE (DIESEL ENGINE)	1	168665C2	1524427
7	SHAKER SHAFT DRIVE 265 RPM	1	564494R2	0302219
7	SHAKER SHAFT DRIVE 280 RPM	1	632102R1	☎
8	STRAW CHOPPER DRIVE	1	160870C1	1602382
8	STRAW CHOPPER DRIVE	1	174642C1	☎
8	STRAW CHOPPER DRIVE	1	177499C1	0202528
9	STRAW SPREADER DRIVE	1	161820C1	1401384
9	STRAW SPREADER DRIVE	1	161821C1	1401401
9	STRAW SPREADER DRIVE	1	196370C1	1401405
10	UNLOADING JACKSHAFT DRIVE	1	160173C1	0102184
11	CYLINDER DRIVE VARIABLE SPEED	1	164006C1	0172217
12	ALTERNATOR, FAN AND WATERPUMP (DSL ONLY)	1	528419R91	0301131
12	ALTERNATOR, FAN AND WATERPUMP (WITH 414 ENGINE)	2	537072R92	0201124
13	SEPARATOR FAN DRIVE	1	164999C2	0709118
14	COMPRESSOR DRIVE (GAS ENGINE)	1	167031C2	1900097
15	ALTERNATOR, FAN AND WATERPUMP DRIVE	1	402253R91	0200128
16	GOVERNOR DRIVE	1	532031R2	1573238
17	CYLINDER DRIVE	1	167099C1	☎

815 GAS

			OE	
1	STRAW CHOPPER JACKSHAFT DRIVE	1	160871C1	0302251
2	ROTARY AIR SCREEN DRIVE	1	38331K	0200143

820

			OE	
1	DRIVE 112-13/64-INCH	1	191305C1	0102216

CASE INTL. HARVESTER

915

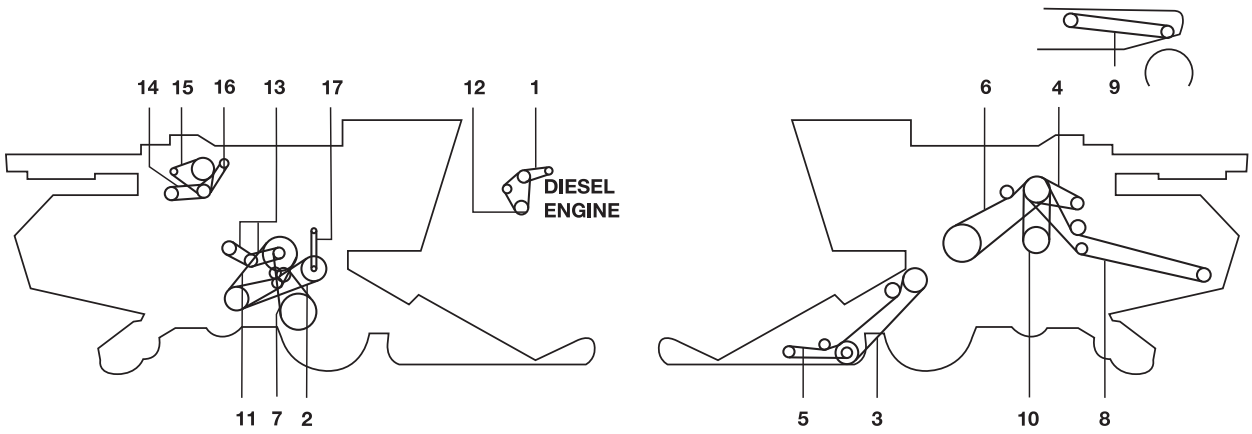

			OE	
0	STRAW CHOPPER JACKSHAFT DRIVE	1	160871C1	0302251
0	ROTARY AIR SCREEN DRIVE	1	168725C1	0100160
0	ROTARY AIR SCREEN DRIVE	1	172360C1	0100159
0	ROTARY AIR SCREEN DRIVE	1	38331K	0200143
0	FEEDER FAST SPEED FOR BOLT ATT. FEEDER	1	633728R2	0203328
2	CYLINDER DRIVE	1	174509C1	0324299
3	FEEDER JACKSHAFT DRIVE	1	176565C1	0302326
3	FEEDER JACKSHAFT DRIVE	1	176566C1	0202332
3	FEEDER JACKSHAFT DRIVE	1	176567C1	0302326
3	FEEDER JACKSHAFT DRIVE	1	176576C1	1402373
3	FEEDER JACKSHAFT DRIVE	1	176577C1	1402373
4	HYDRAULIC REEL PUMP DRIVE (DIESEL ENGINE)	1	179007C1	1901136
5	KNIFE DRIVE	1	178019C1	0302197
6	SEPARATOR DRIVE (GAS ENGINE)	1	166598C2	0724423
6	SEPARATOR DRIVE (DIESEL ENGINE)	1	168665C2	1524427
7	SHAKER SHAFT DRIVE 265 RPM	1	564494R2	0302219
7	SHAKER SHAFT DRIVE 280 RPM	1	632702R1	0502215
8	STRAW CHOPPER DRIVE	1	160870C1	1602382
8	STRAW CHOPPER DRIVE	1	174642C1	☎
8	STRAW CHOPPER DRIVE	1	177499C1	0202528
9	STRAW SPREADER DRIVE	1	196371C1	0701422
9	STRAW SPREADER DRIVE	1	161821C1	1401401
10	UNLOADING JACKSHAFT DRIVE	1	160173C1	0102184
11	CYLINDER DRIVE VARIABLE SPEED	1	164006C1	0172217
12	ALTERNATOR, FAN AND WATERPUMP (DIESEL ONLY)	1	528419R91	0301131
12	ALTERNATOR, FAN AND WATERPUMP (WITHOUT 414 ENGINE)	2	537072R92	0201124
13	SEPARATOR FAN DRIVE	1	164999C92	0709118
15	ALTERNATOR, FAN AND WATERPUMP DRIVE (WITHOUT AIR COMPRESSOR)	1	402253R91	0200128
16	GOVERNOR DRIVE	1	532031R2	1573238
17	CYLINDER DRIVE	1	167099C1	☎

CASE INTL. HARVESTER

923

			OE	
4	AUGER DRIVE (UPPER)	1	726278R1	1901094
5	UNLOADING JACKSHAFT DRIVE	1	3175336R1	0202235
6	CYLINDER	1	3175110R1	0713169
8	FEEDER - PLATFORM	1	3175036R1	0703249
9	TRACTION (UPPER)	1	3157738R1	0703313
10	SEPARATOR DRIVE	1	3172276R1	0710117
11	TRACTION VARIATOR DRIVE	1	3176449R1	☎
12	FAN - RETURN	1	3176321R1	0305204
13	FEEDER - JACKSHAFT	1	3175432R1	1602254

933

			OE	
4	AUGER DRIVE (UPPER)	1	726278R1	1901094
5	UNLOADING JACKSHAFT DRIVE	1	3157994R1	1602254
6	CYLINDER	1	3175110R1	0713169
8	FEEDER - PLATFORM	1	3157741R1	1403239
9	TRACTION (UPPER)	1	3157094R1	0203328
10	SEPARATOR DRIVE	1	3172276R1	0710117
12	FAN - RETURN	1	3176321R1	0305204
13	FEEDER - JACKSHAFT	1	3173480R1	0730341

943

			OE	
1	INTERMEDIATE SHAFT	1	790522R1	1602150
4	AUGER DRIVE (UPPER)	1	726278R1	1901094
5	CYLINDER	1	3168030R3	0715184
6	SEPARATOR DRIVE	1	1407123R1	0110162
7	RETURN ELEVATOR DRIVE	1	1408855R1	0702212
8	COUNTERSHAFT DRIVE	1	3168669R1	2001162
9	DISCHARGE AUGER SHAFT	1	3167361R1	0302200
10	CUTTING TABLE DRIVE	1	3173115R1	0730343
11	FEEDER - PLATFORM	1	3167149R1	0727272
12	TRACTION DRIVE	1	3173717R1	0702272
13	TRACTION VARIATOR DRIVE	1	3179516R1	0713299
15	FEEDER - JACKSHAFT	2	3173164R1	0202285
17	RETURN AUGER - SHAKER	1	3176489R1	0102163
18	REEL DRIVE VARIABLE SPEED	1	1407123R1	0110162

CASE INTL. HARVESTER

953

			OE	
1	REEL DRIVE VARIABLE SPEED	1	1407123R1	0110162
2	CUTTING TABLE DRIVE	1	3167797R1	0202305
3	CUTTING TABLE DRIVE	1	3167149R1	0727272
4	MAIN DRIVE	1	3167653R2	0725342
5	DISCHARGE AUGER SHAFT	1	3167361R2	0302200
6	VARIATOR DRIVE	1	3167189R1	0713301
7	VARIATOR DRIVE	1	3167189R1	0713301
8	RETURN AUGER - SHAKER	1	3167489R1	2902164
9	ROTARY DRIVE	1	726285R1	0201112
10	ROTARY DRIVE INTERMEDIATE SHAFT	1	726276R1	0201108
11	RETURN ELEVATOR DRIVE	1	3170210R1	0202235
12	RETURN AUGER ABOVE CYLINDER	1	3170159R1	1401101
13	INTERMEDIATE SHAFT	1	790522R1	1602150
14	CYLINDER	1	3168030R2	0715184
15	COUNTERSHAFT DRIVE	1	3168669R1	2001162
16	FAN DRIVE	1	1407123R1	0110162

1400

			OE	
1	UNIT MAIN DRIVE	1	217636C1	1400216
3	FAN DRIVE	1	217564C1	0368270
6	CROSS AUGER DRIVE 30.32.34 INCH 4-ROW	1	203170C1	2601323
13	CENTER UNIT DRIVE 36-.38-.AND 40-INCH	1	217698C1	2002190
15	OUTER UNIT DRIVE 30.32.34 INCH 4-ROW	1	217701C1	0201173
16	OUTER UNIT DRIVE 36.38.40 INCH 4-ROW	1	217699C1	1401208
17	OUTER UNIT DRIVE 30-INCH 4-ROW	1	217702C1	0302240
19	OUTER UNIT DRIVE 36.38.40 INCH 4-ROW	1	217700C1	2602213
23	OUTER UNIT DRIVE 30-INCH 4-ROW (1 USED)	1	217702C1	0302240
24	OUTER UNIT DRIVE 30-INCH 4-ROW (1 USED)	3	217703C1	0101158
32	ALTERNATOR, FAN AND WATERPUMP DRIVE	1	130724C91	0372268
33	AIR CONDITIONING COMPRESSOR DRIVE	1	280210C2	1472238

1400 - US EDITION (... - 20715)

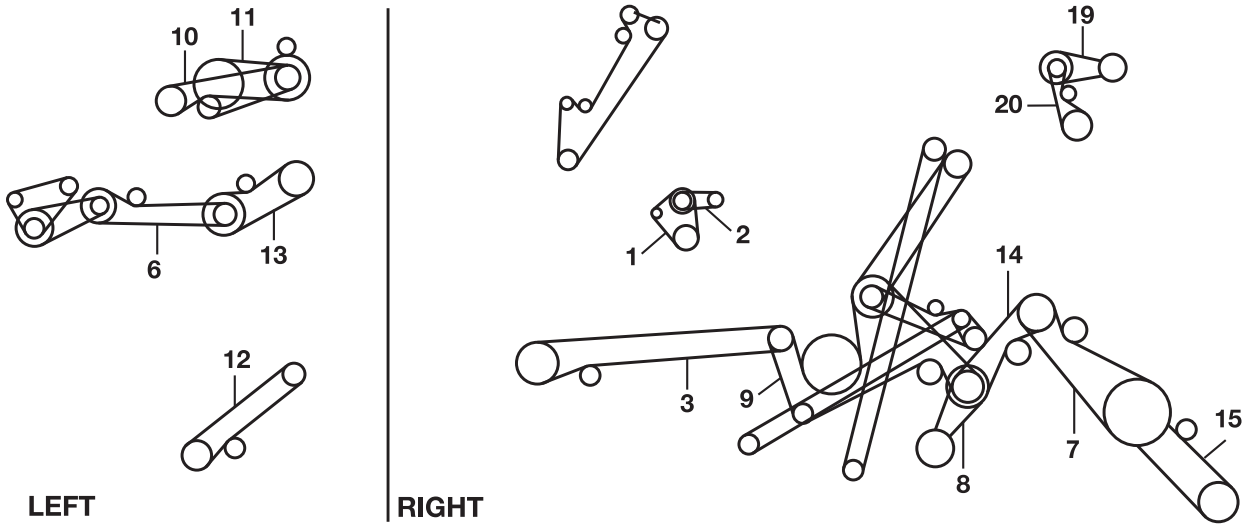

			OE	
1	ALTERNATOR, FAN AND WATERPUMP DRIVE	2	537072R92	0201124
2	AIR CONDITIONING COMPRESSOR DRIVE	1	874097C1	0172211
3	STRAW SPREADER DRIVE	1	153359C1	0301355
6	UNLOADING AUGER DRIVE	1	191290C1	0102257
7	FEEDER DRIVE	1	192738C1	0744366
8	CLEANING FAN DRIVE	1	195396C2	0710159
9	ELEVATOR DRIVE UNIT	1	186509C2	0705492
9	ELEVATOR DRIVE UNIT	1	192360C1	0102489
10	SEPARATOR DRIVE	1	191241C3	0744328
11	ROTOR VARIATOR DRIVE	1	244420A1	0714185
12	REEL DRIVE PUMP	1	197414C2	0202275
12	REEL DRIVE PUMP	1	1315315C1	0202139
13	AUXILIARY PUMP DRIVE	1	191288C3	0102184
14	FAN JACKSHAFT DRIVE	1	191305C1	0102216
15	FEEDER JACKSHAFT DRIVE	1	1313095C2	0744331
15	FEEDER JACKSHAFT DRIVE	1	1313097C3	0244357
19	FAN JACKSHAFT DRIVE	1	181359C1	2002298
20	FAN JACKSHAFT SLOW SPEED	1	610521R1	0301141

CASE INTL. HARVESTER

1400 - US EDITION (20715 - ...) - 1440E

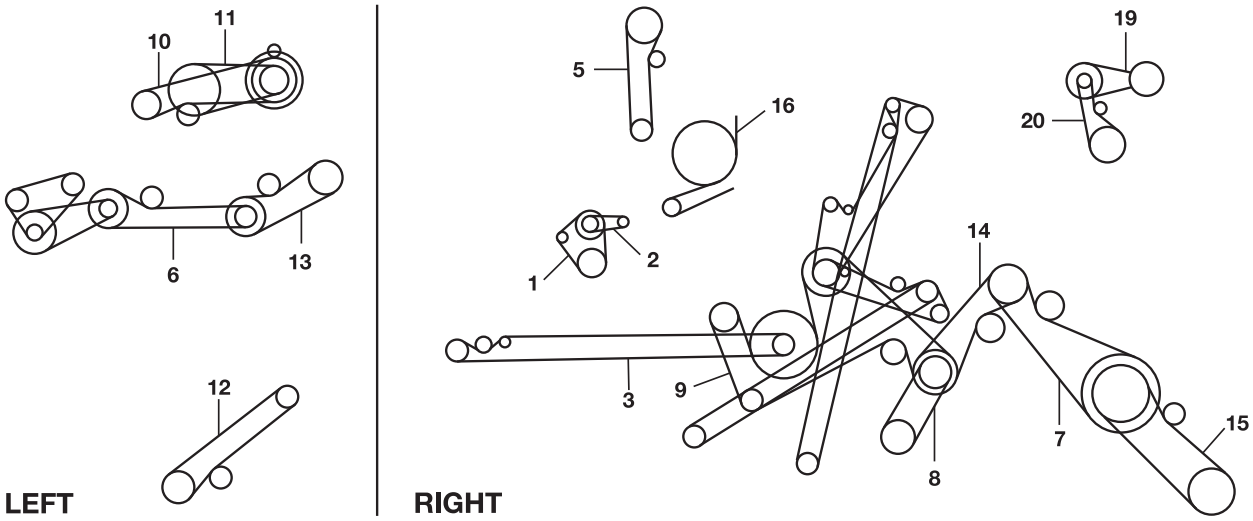

			OE	
1	ALTERNATOR, FAN AND WATERPUMP DRIVE	2	537072R92	0201124
2	AIR CONDITIONING COMPRESSOR DRIVE	1	874097C1	0172211
3	STRAW SPREADER DRIVE	1	196371C1	0701422
5	STRAW CHOPPER DRIVE	1	181012C1	0723221 EE-TECH
6	UNLOADING AUGER DRIVE	1	191290C1	0102257
7	FEEDER DRIVE	1	192738C1	0744366
8	CLEANING FAN DRIVE	1	195396C2	0710159
9	ELEVATOR DRIVE UNIT	1	186509C2	0705492
10	SEPARATOR DRIVE	1	191241C3	0744328
11	ROTOR VARIATOR DRIVE	1	244420A1	0714185
12	REEL DRIVE PUMP WITHOUT ROCK TRAP	1	197414C2	0202275
12	REEL DRIVE PUMP WITH ROCK TRAP	1	1315315C1	0202139
12	REEL DRIVE PUMP WITHOUT ROCK TRAP	1	197411C1	2002253
13	AUXILIARY PUMP DRIVE	1	191288C3	0102184
14	FAN JACKSHAFT DRIVE	1	191305C1	0102216
15	FEEDER JACKSHAFT DRIVE	1	1313095C2	0744331
15	FEEDER JACKSHAFT DRIVE	1	1313097C3	0244357
16	CLEANING UNIT DRIVE WITH STRAW CHOPPER	1	181055C1	0705388
19	FAN JACKSHAFT DRIVE	1	181359C1	2002298
20	FAN JACKSHAFT SLOW SPEED	1	610521R1	0301141

1420

			OE	
1	FAN, ALTERNATOR, WATER PUMP	2	130724C91	0372268
2	COMPRESSOR DRIVE	1	280210C2	1472238
3	STRAW SPREADER DRIVE	1	589622R1	1401412
4	RH SIDE DRIVE W/ DISCHARGE BEATER	1	183049C1	0705586
4	RH SIDE DRIVE W/ STRAW CHOPPER	1	186509C2	0705492
5	FAN DRIVE	1	599060R1	1510140
6	FEEDER DRIVE	1	186377C1	0727301
7	FEEDER JACKSHAFT DRIVE	1	197412C1	2002253
8	GRAIN ELEVATOR, GRAIN/CORN	1	182619C1	0702292
9	TAILINGS ELEVATOR DRIVE	1	674965R1	0702199
10	STRAW CHOPPER DRIVE	1	182945C1	2602288
11	FEEDER JACKSHAFT DRIVE	1	197414C2	0202275
12	UNLOADER JACKSHAFT DRIVE	1	195143C1	0302258
13	AUXILIARY PUMP DRIVE	1	191288C2	0102184
14	SEPARATOR DRIVE	1	191241C2	0744328
15	ROTOR VARIABLE DRIVE	1	1302174C2	0714203

CASE INTL. HARVESTER

1460 - US EDITION (23250 - ...) - 1460E

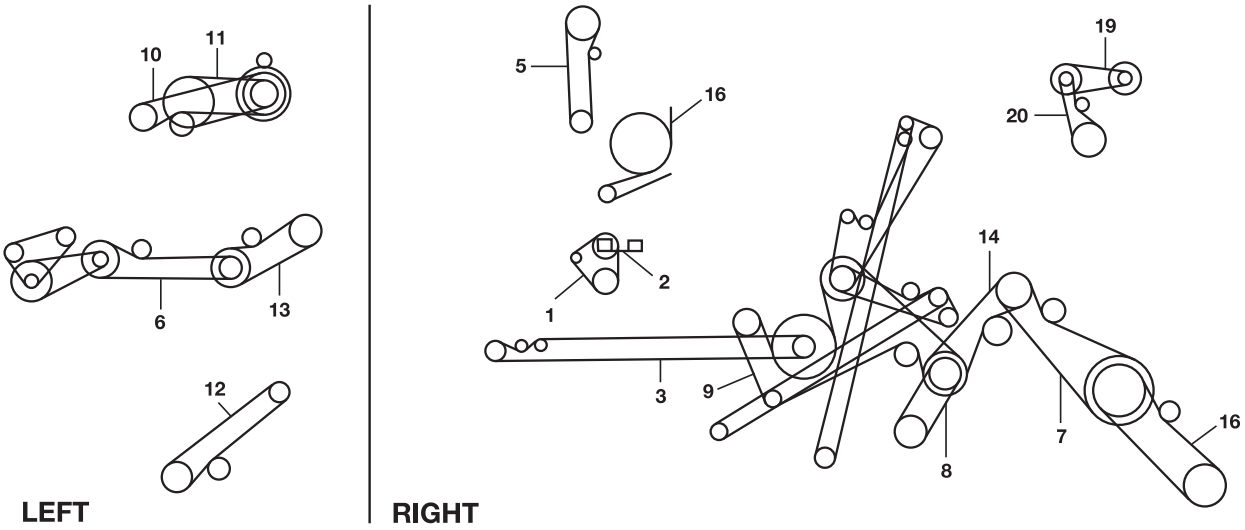

			OE	
1	ALTERNATOR, FAN AND WATERPUMP DRIVE	2	537072R92	0201124
2	AIR CONDITIONING COMPRESSOR DRIVE	1	874097C1	0172211
3	STRAW SPREADER DRIVE	1	196371C1	0701422
5	STRAW CHOPPER DRIVE	1	181012C1	0723221 EE-TECH
6	UNLOADING AUGER DRIVE	1	191290C1	0102257
7	FEEDER DRIVE	1	192738C1	0744366
8	CLEANING FAN DRIVE	1	195396C2	0710159
9	ELEVATOR DRIVE UNIT	1	186509C2	0705492
10	SEPARATOR DRIVE	1	191241C3	0744328
11	ROTOR VARIATOR DRIVE	1	244420A1	0714185
12	REEL DRIVE PUMP WITHOUT ROCK TRAP	1	197414C2	0202275
12	REEL DRIVE PUMP WITH ROCK TRAP	1	1315315C1	0202139
12	REEL DRIVE PUMP WITHOUT ROCK TRAP	1	197411C1	2002253
13	AUXILIARY PUMP DRIVE	1	191288C3	0102184
14	FAN JACKSHAFT DRIVE	1	191305C1	0102216
15	FEEDER JACKSHAFT DRIVE	1	1313095C2	0744331
15	FEEDER JACKSHAFT DRIVE	1	1313097C3	0244357
16	CLEANING UNIT DRIVE WITH STRAW CHOPPER	1	181055C1	0705388
19	FAN JACKSHAFT DRIVE	1	181359C1	2002298
20	FAN JACKSHAFT SLOW SPEED	1	610521R1	0301141

1460 - US EDITION (23247 - ...)

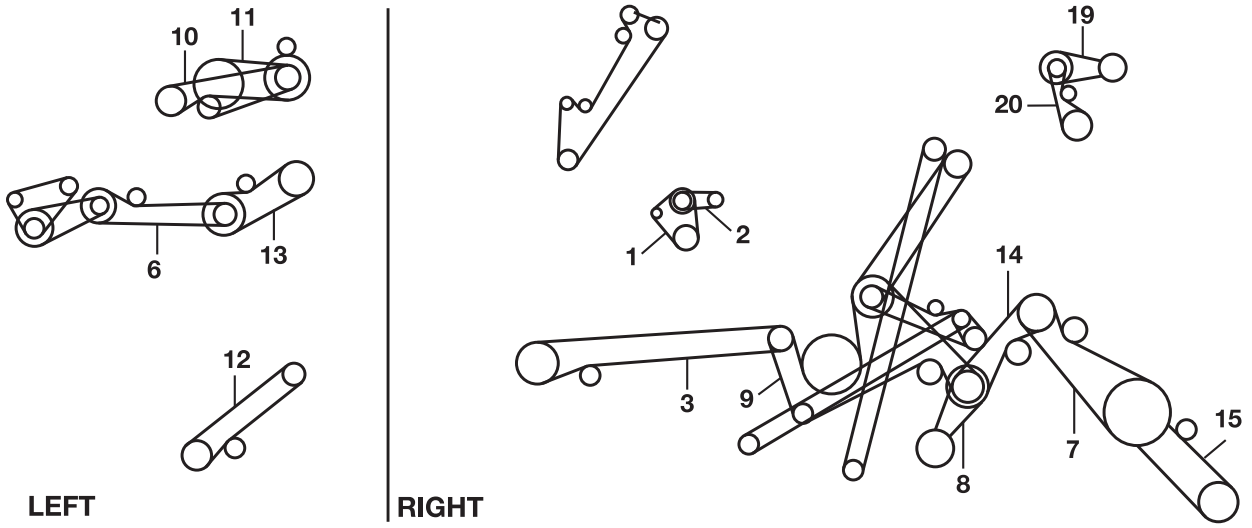

			OE	
1	ALTERNATOR, FAN AND WATERPUMP DRIVE	2	537072R92	0201124
2	AIR CONDITIONING COMPRESSOR DRIVE	1	874097C1	0172211
3	STRAW SPREADER DRIVE	1	153359C1	0301355
6	UNLOADING AUGER DRIVE	1	191290C1	0102257
7	FEEDER DRIVE	1	192738C1	0744366
8	CLEANING FAN DRIVE	1	195396C2	0710159
9	ELEVATOR DRIVE UNIT	1	186509C2	0705492
9	ELEVATOR DRIVE UNIT	1	192360C1	0102489
10	SEPARATOR DRIVE	1	191241C3	0744328
11	ROTOR VARIATOR DRIVE	1	244420A1	0714185
12	REEL DRIVE PUMP WITHOUT ROCK TRAP	1	197414C2	0202275
12	REEL DRIVE PUMP WITH ROCK TRAP	1	1315315C1	0202139
13	AUXILIARY PUMP DRIVE	1	191288C3	0102184
14	FAN JACKSHAFT DRIVE	1	191305C1	0102216
15	FEEDER JACKSHAFT DRIVE	1	1313095C2	0744331
15	FEEDER JACKSHAFT DRIVE	1	1313097C3	0244357
19	FAN JACKSHAFT DRIVE	1	181359C1	2002298
20	FAN JACKSHAFT SLOW SPEED	1	610521R1	0301141

CASE INTL. HARVESTER

1480 - US EDITION (24000 - ...)

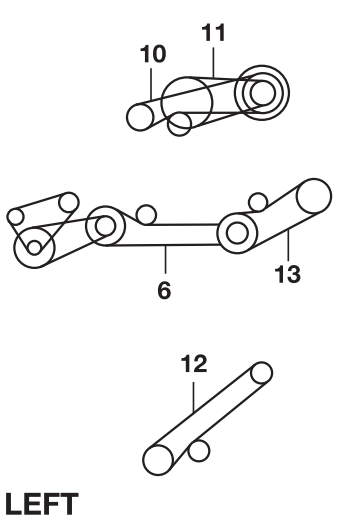

LEFT

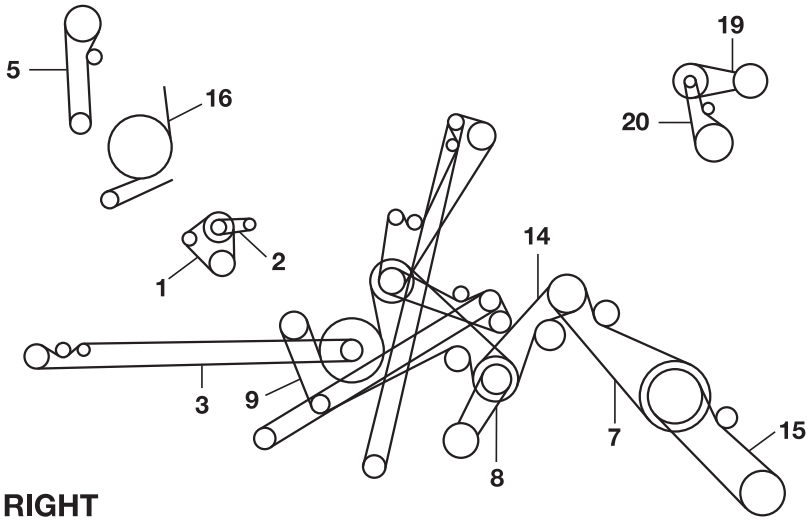

RIGHT

			OE	
1	ALTERNATOR, FAN AND WATERPUMP DRIVE	2	537072R92	0201124
2	AIR CONDITIONING COMPRESSOR DRIVE	1	874097C1	0172211
3	STRAW SPREADER DRIVE	1	196371C1	0701422
5	STRAW CHOPPER DRIVE	1	181013C1	0123242 EE-TECH
6	UNLOADING AUGER DRIVE	1	191291C1	0702274
7	FEEDER DRIVE	1	194528C1	0744354
8	CLEANING FAN DRIVE	1	195396C2	0710159
9	ELEVATOR DRIVE UNIT	1	186509C2	0705492
10	SEPARATOR DRIVE	1	191244C1	0724321 EE-TECH
11	ROTOR VARIATOR DRIVE	1	244422A1	0714216
12	REEL DRIVE PUMP	1	197414C2	0202275
12	REEL DRIVE PUMP	1	197480C2	2002283
13	AUXILIARY PUMP DRIVE	1	191288C3	0102184
14	FAN JACKSHAFT DRIVE	1	188213C1	2602244
15	FEEDER JACKSHAFT DRIVE	1	1313097C3	0244357
15	FEEDER JACKSHAFT DRIVE	1	1308489C2	0744379
16	CLEANING UNIT DRIVE WITH STRAW CHOPPER	1	181055C1	0705388
19	FAN JACKSHAFT DRIVE	1	181359C1	2002298
20	FAN JACKSHAFT SLOW SPEED	1	610521R1	0301141

1480 - US EDITION (... - 24000)

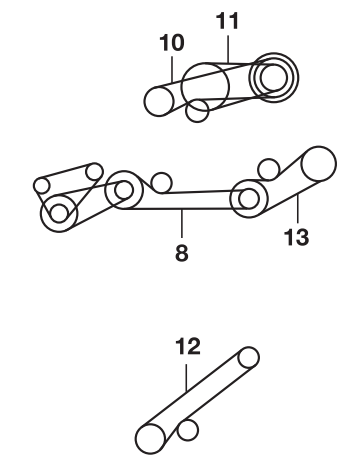

LEFT

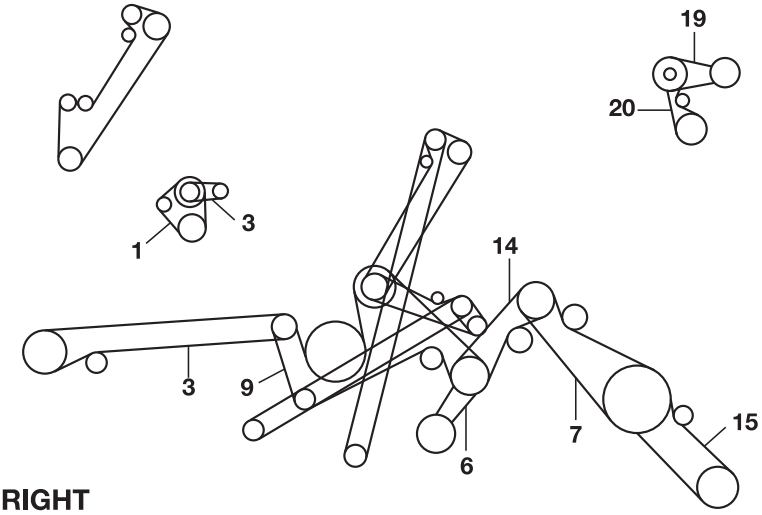

RIGHT

			OE	
1	ALTERNATOR, FAN AND WATERPUMP DRIVE	2	537072R92	0201124
2	AIR CONDITIONING COMPRESSOR DRIVE	1	874097C1	0172211
3	STRAW SPREADER DRIVE	1	153359C1	0301355
6	UNLOADING AUGER DRIVE	1	191291C1	0702274
7	FEEDER DRIVE	1	194528C1	0744354
8	CLEANING FAN DRIVE	1	195396C2	0710159
9	ELEVATOR DRIVE UNIT	1	186509C2	0705492
10	SEPARATOR DRIVE	1	191244C1	0724321 EE-TECH
11	ROTOR VARIATOR DRIVE	1	244422A1	0714216
12	REEL DRIVE PUMP WITHOUT ROCK TRAP	1	197414C2	0202275
12	REEL DRIVE PUMP WITH ROCK TRAP	1	197480C2	2002283
13	AUXILIARY PUMP DRIVE	1	191288C3	0102184
14	FAN JACKSHAFT DRIVE	1	188213C1	2602244
15	FEEDER JACKSHAFT DRIVE	1	1313097C3	0244357
15	FEEDER JACKSHAFT DRIVE	1	1308489C2	0744379
19	FAN JACKSHAFT DRIVE	1	181359C1	2002298
20	FAN JACKSHAFT SLOW SPEED	1	610521R1	0301141

CASE INTL. HARVESTER

1620

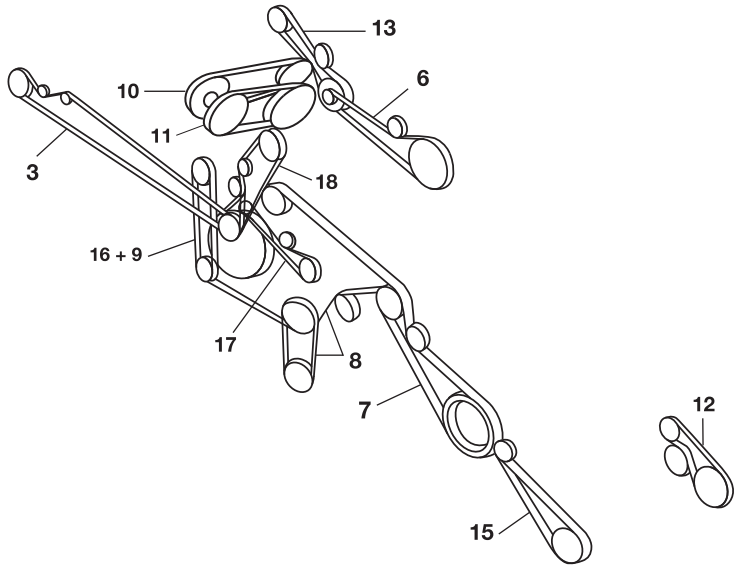

			OE	
1	ALTERNATOR, FAN AND WATERPUMP DRIVE	1	130724C91	0372268
2	AIR CONDITIONING COMPRESSOR DRIVE	1	280210C2	1472238
2	AIR CONDITIONING COMPRESSOR DRIVE	1	874097C1	0172211
3	STRAW SPREADER DRIVE	1	589622R1	1401412
5	STRAW CHOPPER DRIVE	1	182945C1	2602288
6	UNLOADING AUGER DRIVE	1	195143C1	0302258
7	FEEDER DRIVE	1	186509C2	0705492
7	FEEDER DRIVE	1	186377C1	0727301
8	CLEANING FAN DRIVE	1	599060R1	1510140
9	ELEVATOR DRIVE UNIT	1	183049C1	0705586
10	SEPARATOR DRIVE	1	191241C3	0744328
11	ROTOR VARIATOR DRIVE	1	1302174C2	0714203
12	REEL DRIVE PUMP	1	197414C2	0202275
13	AUXILIARY PUMP DRIVE	1	191288C3	0102184
15	FEEDER JACKSHAFT DRIVE	1	197412C1	2002253
16	CLEANING UNIT DRIVE WITH STRAW CHOPPER	1	186509C2	0705492
17	TAILINGS ELEVATOR DRIVE	1	674965R2	0702199
18	ELEVATOR DRIVE GRAIN	1	182619C1	0702292
18	ELEVATOR DRIVE GRAIN	1	181433C1	0202305

1640 (ENGINE DT436B)

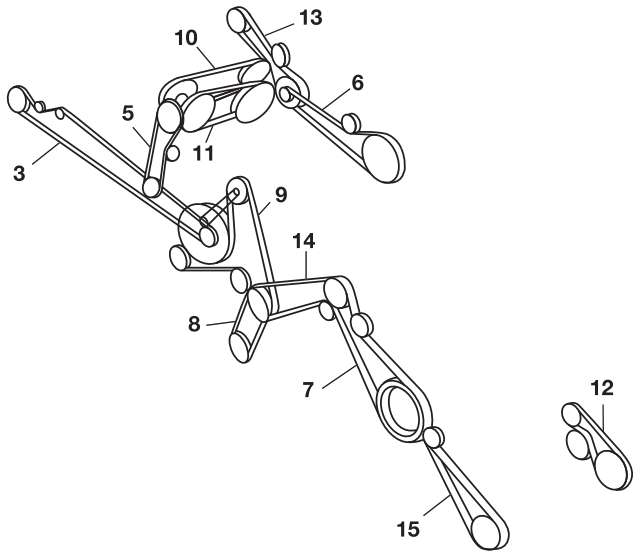

			OE	
1	ALTERNATOR, FAN AND WATERPUMP DRIVE	2	537072R92	0201124
2	AIR CONDITIONING COMPRESSOR DRIVE	1	164550R2	0172217
3	STRAW SPREADER DRIVE	1	196371C1	0701422
5	STRAW CHOPPER DRIVE	1	1315265C1	0323229
6	UNLOADING AUGER DRIVE	1	191290C1	0102257
7	FEEDER DRIVE WITHOUT ROCK TRAP	1	192738C1	0744366
7	FEEDER DRIVE WITH ROCK TRAP	1	1315168C1	0744397
8	CLEANING FAN DRIVE	1	195396C2	0710159
9	ELEVATOR DRIVE UNIT	1	181055C1	0705388
10	SEPARATOR DRIVE	1	191241C3	0744328
11	ROTOR VARIATOR DRIVE	1	244420A1	0714185
12	REEL DRIVE PUMP	1	1321564C2	0102123
12	REEL DRIVE PUMP	1	1321565C1	1602150
13	AUXILIARY PUMP DRIVE	1	191288C3	0102184
14	FAN JACKSHAFT DRIVE	1	191305C1	0102216
15	FEEDER JACKSHAFT DRIVE	1	1313095C2	0744331
15	FEEDER JACKSHAFT DRIVE	1	1313097C3	0244357
19	FAN JACKSHAFT DRIVE	1	181359C1	2002298
20	FAN JACKSHAFT SLOW SPEED	1	610521R1	0301141

CASE INTL. HARVESTER

1640 (ENGINE NCE)

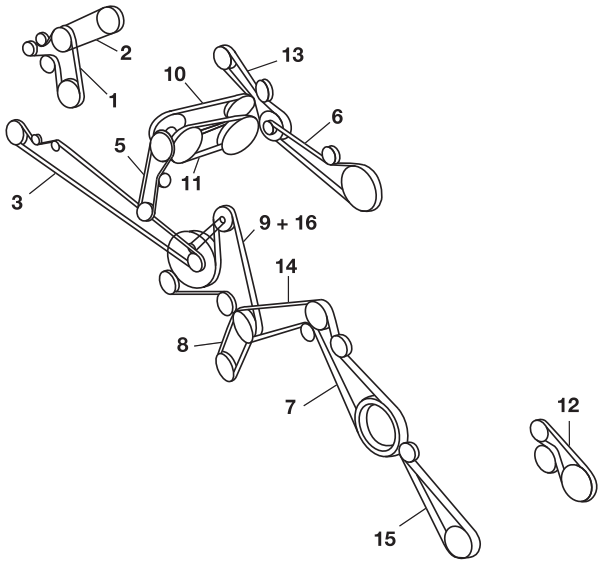

			OE	Gates
1	ALTERNATOR, FAN AND WATERPUMP DRIVE	1	J911562	0785269
2	AIR CONDITIONING COMPRESSOR DRIVE	1	L72739	0400081
3	STRAW SPREADER DRIVE	1	196371	0701422
5	STRAW CHOPPER DRIVE	1	1347157C1	0123242 EE-TECH
6	UNLOADING AUGER DRIVE	1	191290C1	0102257
6	UNLOADING AUGER DRIVE	1	1989216C1	0302262
7	FEEDER DRIVE WITHOUT ROCK TRAP	1	192738C1	0744366
7	FEEDER DRIVE WITH ROCK TRAP	1	1315168C1	0744397
8	CLEANING FAN DRIVE	1	195396C2	0710159
9	ELEVATOR DRIVE UNIT	1	186509C2	0705492
10	SEPARATOR DRIVE	1	191241C3	0744328
11	ROTOR VARIATOR DRIVE	1	244420A1	0714185
12	REEL DRIVE PUMP (47)	1	1321564C2	0102123
12	REEL DRIVE PUMP (54.5)	1	1321565C2	0402155
12	REEL DRIVE PUMP (54.5)	1	1330311C2	1401137
12	REEL DRIVE PUMP (47)	1	1979606C1	0201112
13	AUXILIARY PUMP DRIVE	1	1347387C1	0323231
13	AUXILIARY PUMP DRIVE	1	1970115C1	1202193
14	FAN JACKSHAFT DRIVE	1	191305C1	0102216
15	FEEDER JACKSHAFT DRIVE	1	1313095C2	0744331
15	FEEDER JACKSHAFT DRIVE	1	1313097C3	0244357
16	CLEANING UNIT DRIVE WITH STRAW CHOPPER	1	181055C1	0705388
19	FAN JACKSHAFT DRIVE	1	181359C1	2002298
20	FAN JACKSHAFT SLOW SPEED	1	610521R1	0301141

1644

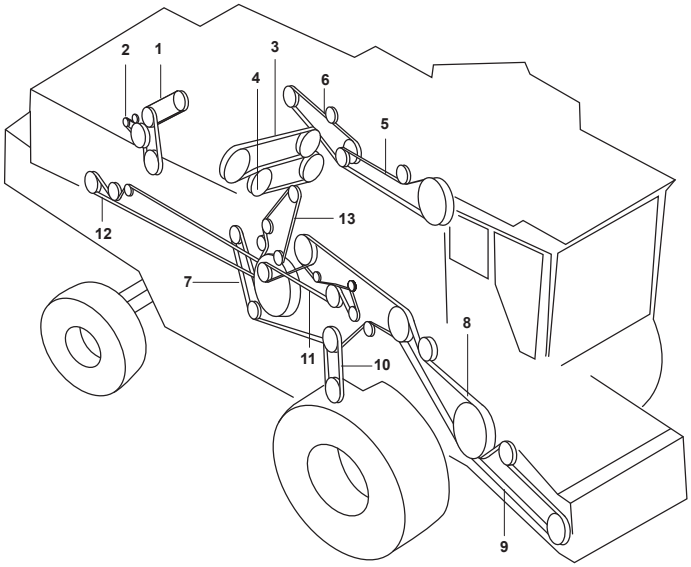

			OE	
1	COMPRESSOR, A/C	1	1250587C1	0272215
2	FAN, ALTERNATOR, WATER PUMP	1	J911565	0385270
3	SEPARATOR DRIVE	1	191241C1	0744328
4	ROTOR VARIABLE DRIVE	1	193923C3	0714185
5	GRAIN TANK UNLOADER DRIVE	1	1989216C1	0302262
6	AUXILLIARY PUMP DRIVE	1	1347387C1	0323231
7	STRAW CHOPPER DRIVE	1	1315265C1	0323229
8	FEEDER DRIVE W/ROCK TRAP	1	1315168C1	0744397
8	FEEDER DRIVE WITHOUT ROCK TRAP	1	1932738C1	☎
9	FEEDER JACKSHAFT DRIVE, W/47" FEEDER	1	1313095C2	0744331
9	FEEDER JACKSHAFT DRIVE W/54 1/2" FEEDER	1	1313097C3	0244357
10	CLEANING FAN JACKSHAFT DRIVE	1	191305C1	0102216
11	CLEANING FAN DRIVE	1	1541569C1	0310155
12	STRAW SPREADER DRIVE	1	196371C1	0701422
13	ELEVATOR DRIVE	1	181055C1	0705388
13	ELEVATOR DRIVE W/DISCHARGE BEATER	1	186509C2	0705492

1660 (ENGINE DT466B)

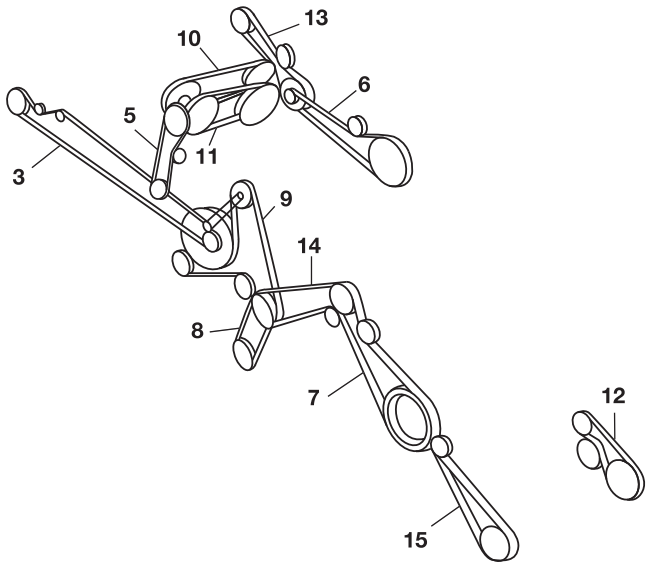

			OE	
1	ALTERNATOR, FAN AND WATERPUMP DRIVE	2	537072R92	0201124
2	AIR CONDITIONING COMPRESSOR DRIVE	1	164550R2	0172217
3	STRAW SPREADER DRIVE	1	196371C1	0701422
5	STRAW CHOPPER DRIVE	1	1315265C1	0323229
6	UNLOADING AUGER DRIVE	1	191290C1	0102257
7	FEEDER DRIVE WITHOUT ROCK TRAP	1	192738C1	0744366
7	FEEDER DRIVE WITH ROCK TRAP	1	1315168C1	0744397
8	CLEANING FAN DRIVE	1	195396C2	0710159
9	ELEVATOR DRIVE UNIT	1	181055C1	0705388
10	SEPARATOR DRIVE	1	191241C3	0744328
11	ROTOR VARIATOR DRIVE	1	244420A1	0714185
12	REEL DRIVE PUMP	1	1321564C2	0102123
12	REEL DRIVE PUMP	1	1321565C1	1602150
13	AUXILIARY PUMP DRIVE	1	191288C3	0102184
14	FAN JACKSHAFT DRIVE	1	191305C1	0102216
15	FEEDER JACKSHAFT DRIVE	1	1313095C2	0744331
15	FEEDER JACKSHAFT DRIVE	1	1313097C3	0244357
19	FAN JACKSHAFT DRIVE	1	181359C1	2002298
20	FAN JACKSHAFT SLOW SPEED	1	610521R1	0301141

1660 (ENGINE NCE)

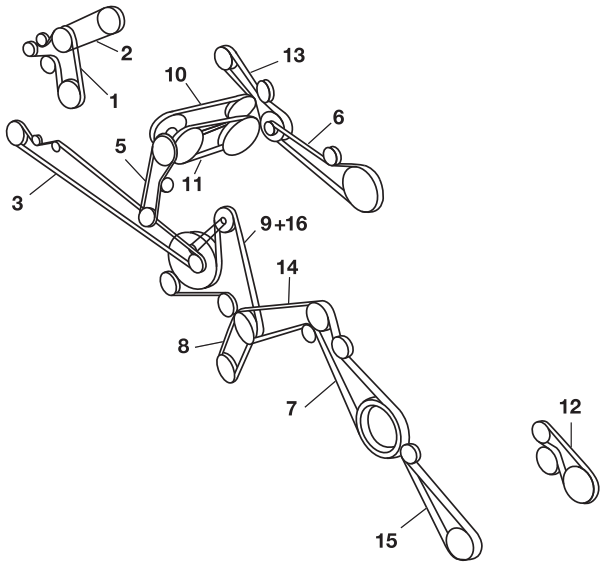

			OE	
1	ALTERNATOR, FAN AND WATERPUMP DRIVE	1	J911572	0785286
1	ALTERNATOR, FAN AND WATERPUMP DRIVE	1	J911574	0785278
2	AIR CONDITIONING COMPRESSOR DRIVE	1	396829R1	0172219
3	STRAW SPREADER DRIVE	1	196371C1	0701422
5	STRAW CHOPPER DRIVE	1	1347157C1	0123242 EE-TECH
5	STRAW CHOPPER DRIVE	1	1315265C1	0323229
6	UNLOADING AUGER DRIVE	1	191290C1	0102257
6	UNLOADING AUGER DRIVE	1	1989216C1	0302262
7	FEEDER DRIVE WITHOUT ROCK TRAP	1	192738C1	0744366
7	FEEDER DRIVE WITH ROCK TRAP	1	1315168C1	0744397
8	CLEANING FAN DRIVE	1	1541569C1	0310155
8	CLEANING FAN DRIVE	1	195396C2	0710159
9	ELEVATOR DRIVE UNIT	1	186509C2	0705492
10	SEPARATOR DRIVE	1	191241C3	0744328
11	ROTOR VARIATOR DRIVE	1	244420A1	0714185
12	REEL DRIVE PUMP (47)	1	1321564C2	0102123
12	REEL DRIVE PUMP (54.5)	1	1321565C2	0402155
12	REEL DRIVE PUMP (54.5)	1	1330311C2	1401137
12	REEL DRIVE PUMP (47)	1	1979606C1	0201112
13	AUXILIARY PUMP DRIVE	1	1347387C1	0323231
13	AUXILIARY PUMP DRIVE	1	1541699C1	0323225 EE-TECH
13	AUXILIARY PUMP DRIVE	1	1970115C1	1202193
14	FAN JACKSHAFT DRIVE	1	191305C1	0102216
15	FEEDER JACKSHAFT DRIVE	1	1313095C2	0744331
15	FEEDER JACKSHAFT DRIVE	1	1313097C3	0244357
16	CLEANING UNIT DRIVE WITH STRAW CHOPPER	1	181055C1	0705388
19	FAN JACKSHAFT DRIVE	1	181359C1	2002298
20	FAN JACKSHAFT SLOW SPEED	1	610521R1	0301141
21	CHAFF SPREADER DRIVE (UPPER)	1	123305A1	0701490

CASE INTL. HARVESTER

1666

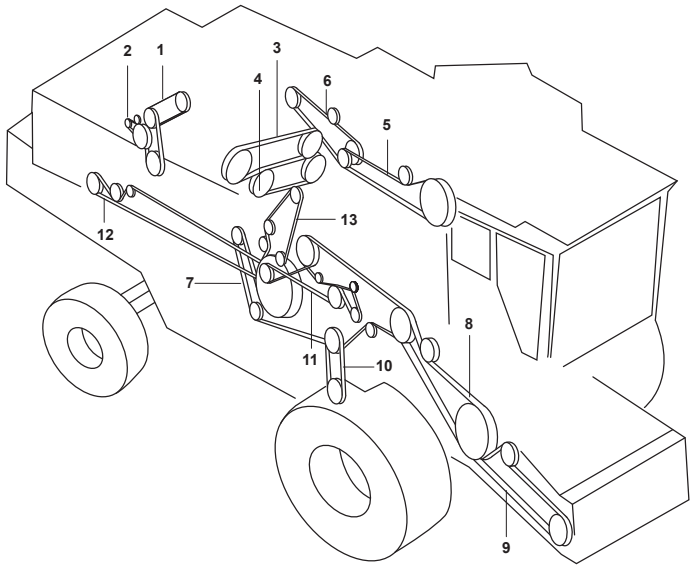

			OE	
1	COMPRESSOR, A/C	1	396829R1	0172219
2	FAN, ALTERNATOR, WATER PUMP	1	J911572	0785286
3	SEPARATOR DRIVE	1	191241C1	0744328
4	ROTOR VARIABLE DRIVE	1	193923C3	0714185
5	GRAIN TANK UNLOADER DRIVE	1	1989216C1	0302262
6	AUXILLIARY PUMP DRIVE	1	1347387C1	0323231
7	STRAW CHOPPER DRIVE	1	1315265C1	0323229
8	FEEDER DRIVE W/ROCK TRAP	1	1315168C1	0744397
8	FEEDER DRIVE WITHOUT ROCK TRAP	1	1932738C1	☎
9	FEEDER JACKSHAFT DRIVE, W/47" FEEDER	1	1313095C2	0744331
9	FEEDER JACKSHAFT DRIVE W/54 1/2" FEEDER	1	1313097C3	0244357
10	CLEANING FAN JACKSHAFT DRIVE	1	191305C1	0102216
11	CLEANING FAN DRIVE	1	1541569C1	0310155
12	STRAW SPREADER DRIVE	1	196371C1	0701422
13	ELEVATOR DRIVE	1	181055C1	0705388
13	ELEVATOR DRIVE W/DISCHARGE BEATER	1	186509C2	0705492

1680 (ENGINE NCE)

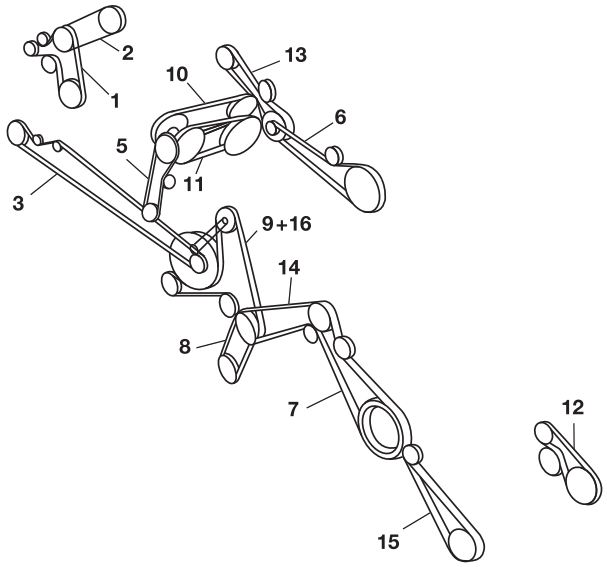

			OE	
1	ALTERNATOR, FAN AND WATERPUMP DRIVE	1	J911572	0785286
1	ALTERNATOR, FAN AND WATERPUMP DRIVE	1	J911574	0785278
2	AIR CONDITIONING COMPRESSOR DRIVE	1	396829R1	0172219
3	STRAW SPREADER DRIVE	1	196371C1	0701422
5	STRAW CHOPPER DRIVE	1	1347160C1	0723264 EE-TECH
5	STRAW CHOPPER DRIVE	1	1315266C1	1123251
6	UNLOADING AUGER DRIVE	1	191291C1	0702274
6	UNLOADING AUGER DRIVE	1	1989217C1	0302281
7	FEEDER DRIVE	1	194528C1	0744354
8	CLEANING FAN DRIVE	1	1541569C1	0310155
8	CLEANING FAN DRIVE	1	195396C2	0710159
9	ELEVATOR DRIVE UNIT	1	186509C2	0705492
10	SEPARATOR DRIVE	1	1330499C1	0724325 EE-TECH
10	SEPARATOR DRIVE	1	1541702C1	0744362
11	ROTOR VARIATOR DRIVE	1	244422A1	0714216
12	REEL DRIVE PUMP (60)	1	1315226C1	0202168
12	REEL DRIVE PUMP (54.5)	1	1321565C1	1602150
12	REEL DRIVE PUMP (54.5)	1	1330311C2	1401137
12	REEL DRIVE PUMP (60)	1	1979607C1	☎
13	AUXILIARY PUMP DRIVE	1	1347358C1	0323233 EE-TECH
13	AUXILIARY PUMP DRIVE	1	1541700C1	0723228 EE-TECH
13	AUXILIARY PUMP DRIVE	1	1970116C1	0302197
14	FAN JACKSHAFT DRIVE	1	188213C1	2602244
15	FEEDER JACKSHAFT DRIVE	1	1313097C3	0244357
15	FEEDER JACKSHAFT DRIVE	1	1308489C2	0744379
16	CLEANING UNIT DRIVE WITH STRAW CHOPPER	1	181055C1	0705388
19	FAN JACKSHAFT DRIVE	1	181359C1	2002298
20	FAN JACKSHAFT SLOW SPEED	1	610521R1	0301141
21	CHAFF SPREADER DRIVE (UPPER)	1	123305A1	0701490
22	CHAFF SPREADER DRIVE (LOWER)	1	123307A1	0201155

CASE INTL. HARVESTER

1680 (ENGINE DTI466C)

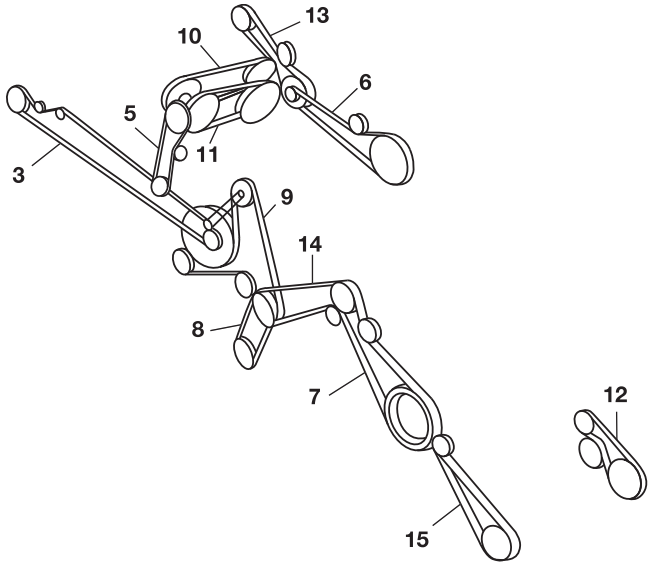

			OE	
1	ALTERNATOR, FAN AND WATERPUMP DRIVE	1	131201C92	0201123
2	AIR CONDITIONING COMPRESSOR DRIVE	1	1250587C1	0272215
3	STRAW SPREADER DRIVE	1	196371C1	0701422
5	STRAW CHOPPER DRIVE	1	1315266C1	1123251
6	UNLOADING AUGER DRIVE	1	191291C1	0702274
7	FEEDER DRIVE WITH ROCK TRAP	1	1315074C1	0744382
7	FEEDER DRIVE WITHOUT ROCK TRAP	1	194528C1	0744354
8	CLEANING FAN DRIVE	1	195396C2	0710159
9	ELEVATOR DRIVE UNIT	1	186509C2	0705492
10	SEPARATOR DRIVE	1	191244C1	0724321 EE-TECH
11	ROTOR VARIATOR DRIVE	1	244422A1	0714216
12	REEL DRIVE PUMP	1	1315226C1	0202168
12	REEL DRIVE PUMP	1	1321565C1	1602150
13	AUXILIARY PUMP DRIVE	1	191288C3	0102184
14	FAN JACKSHAFT DRIVE	1	188213C1	2602244
15	FEEDER JACKSHAFT DRIVE	1	1313097C3	0244357
15	FEEDER JACKSHAFT DRIVE	1	1308489C2	0744379
16	CLEANING UNIT DRIVE WITH STRAW CHOPPER	1	181055C1	0705388
19	FAN JACKSHAFT DRIVE	1	181359C1	2002298
20	FAN JACKSHAFT SLOW SPEED	1	610521R1	0301141

1688

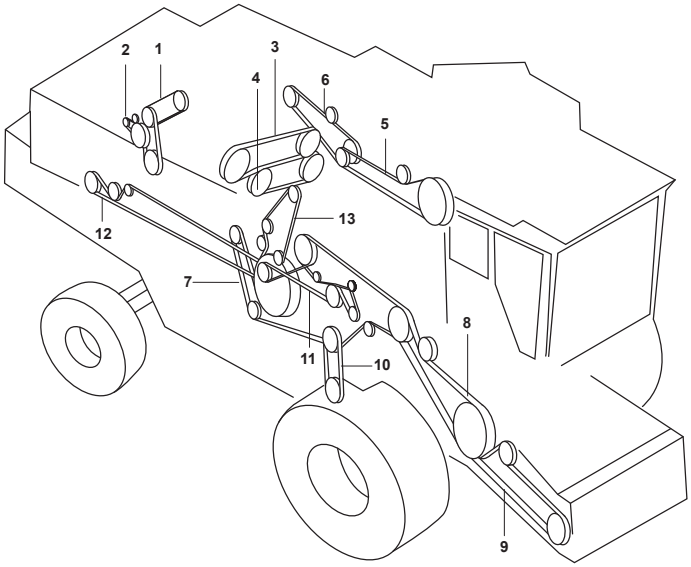

			OE	
1	COMPRESSOR, A/C	1	396829R1	0172219
2	FAN, ALTERNATOR, WATER PUMP	1	J911572	0785286
3	SEPARATOR DRIVE	1	1541702C1	0744362
4	ROTOR DRIVE	1	193945C2	0714216
5	GRAIN TANK UNLOADER DRIVE	1	1989217C1	0302281
6	AUXILLIARY PUMP DRIVE	1	1541700C1	0723228 EE-TECH
7	STRAW CHOPPER DRIVE	1	1315266C1	1123251
8	FEEDER DRIVE W/ROCK TRAP	1	1315074C1	0744382
8	FEEDER DRIVE WITHOUT ROCK TRAP	1	194528C1	0744354
9	FEEDER JACKSHAFT DRIVE W/60" FEEDER	1	1308489C2	0744379
9	FEEDER JACKSHAFT DRIVE W/54 1/2" FEEDER	1	1313097C3	0244357
10	CLEANING FAN JACKSHAFT DRIVE	1	188213C1	2602244
11	CLEANING FAN DRIVE	1	1541569C1	0310155
12	STRAW SPREADER DRIVE	1	196371C1	0701422
13	ELEVATOR DRIVE	1	181055C1	0705388
13	ELEVATOR DRIVE W/DISCHARGE BEATER	1	186509C2	0705492

2055

			OE	
1	FAN (FRONT)	1	1338328C1	☎
2	FAN DRIVE	1	1546117C2	0724190
3	HYDRAULIC PUMP DRIVE	1	1546118C1	0723162

CASE INTL. HARVESTER

2144

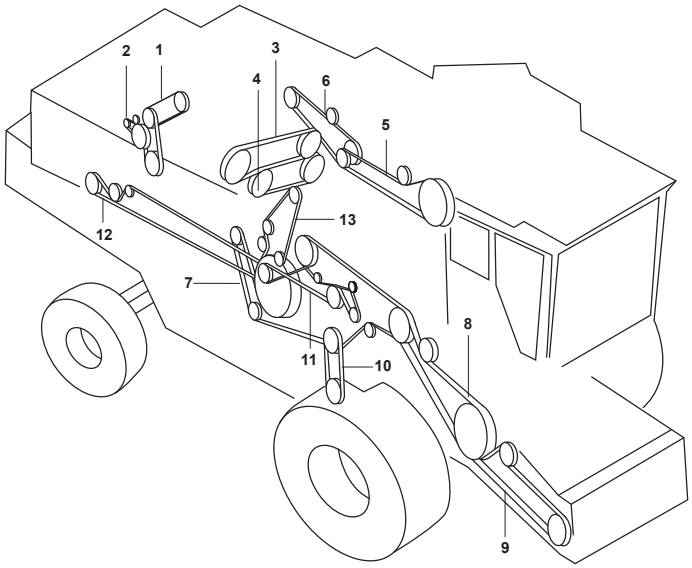

			OE	
1	COMPRESSOR, A/C	1	1250587C1	0272215
2	FAN, ALTERNATOR, WATER PUMP	1	J911565	0385270
3	SEPARATOR DRIVE	1	191241C1	0744328
4	ROTOR VARIABLE DRIVE	1	193923C3	0714185
5	GRAIN TANK UNLOADER DRIVE	1	1989216C1	0302262
6	AUXILLIARY PUMP DRIVE	1	124573A1	0723228 EE-TECH
7	STRAW CHOPPER DRIVE	1	1315265C1	0323229
8	FEEDER DRIVE W/ROCK TRAP	1	1315168C1	0744397
8	FEEDER DRIVE WITHOUT ROCK TRAP	1	1932738C1	☎
9	FEEDER JACKSHAFT DRIVE W/60" FEEDER	1	1308489C2	0744379
9	FEEDER JACKSHAFT DRIVE W/54 1/2" FEEDER	1	1313097C3	0244357
11	CLEANING FAN DRIVE	1	1541569C1	0310155
12	STRAW SPREADER DRIVE	1	196371C1	0701422
13	ELEVATOR DRIVE W/DISCHARGE BEATER	1	186509C2	0705492

2166

			OE	
1	ALTERNATOR, FAN AND WATERPUMP DRIVE	1	J911572	0785286
2	AIR CONDITIONING COMPRESSOR DRIVE	1	396829R1	0172219
3	STRAW SPREADER DRIVE	1	196371C1	0701422
5	STRAW CHOPPER DRIVE	1	1347157C1	0123242 EE-TECH
6	UNLOADING AUGER DRIVE	1	191290C1	0102257
7	FEEDER DRIVE WITHOUT ROCK TRAP	1	192738C1	0744366
7	FEEDER DRIVE WITH ROCK TRAP	1	1315168C1	0744397
8	CLEANING FAN DRIVE	1	1541569C1	0310155
9	ELEVATOR DRIVE UNIT	1	186509C2	0705492
10	SEPARATOR DRIVE	1	191241C3	0744328
11	ROTOR VARIATOR DRIVE	1	244420A1	0714185
13	AUXILIARY PUMP DRIVE	1	124572A1	0123224
14	FAN JACKSHAFT DRIVE	1	191305C1	0102216
15	FEEDER JACKSHAFT DRIVE	1	1313097C3	0244357
15	FEEDER JACKSHAFT DRIVE	1	1308489C2	0744379
16	CLEANING UNIT DRIVE	1	181055C1	0705388
21	CHAFF SPREADER DRIVE (UPPER)	1	123305A1	0701490
22	CHAFF SPREADER DRIVE (LOWER)	1	123306A1	0301147

2188

			OE	
1	ALTERNATOR, FAN AND WATERPUMP DRIVE	1	J911572	0785286
2	AIR CONDITIONING COMPRESSOR DRIVE	1	396829R1	0172219
3	STRAW SPREADER DRIVE	1	196371C1	0701422
5	STRAW CHOPPER DRIVE	1	1347160C1	0723264 EE-TECH
6	UNLOADING AUGER DRIVE	1	198217C1	☎
7	FEEDER DRIVE WITH ROCK TRAP	1	1315074C1	0744382
7	FEEDER DRIVE WITHOUT ROCK TRAP	1	194528C1	0744354
8	CLEANING FAN DRIVE	1	1541569C1	0310155
9	ELEVATOR DRIVE UNIT	1	186509C2	0705492
10	SEPARATOR DRIVE	1	1541702C1	0744362
11	ROTOR VARIATOR DRIVE	1	244422A1	0714216
13	AUXILIARY PUMP DRIVE	1	124573A1	0723228 EE-TECH
14	FAN JACKSHAFT DRIVE	1	188213C1	2602244
15	FEEDER JACKSHAFT DRIVE	1	1313097C3	0244357
15	FEEDER JACKSHAFT DRIVE	1	1308489C2	0744379
16	CLEANING UNIT DRIVE	1	181055C1	0705388
21	CHAFF SPREADER DRIVE (UPPER)	1	123305A1	0701490
22	CHAFF SPREADER DRIVE (LOWER)	1	123307A1	0201155

2344

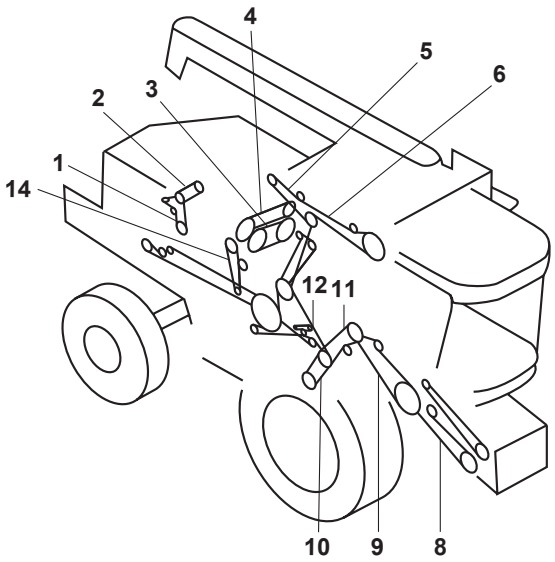

			OE	
1	ENGINE FAN DRIVE AND ALTERNATOR	1	J911565	0385270
2	AIR CONDITIONING COMPRESSOR	1	164550R2	0172217
3	ROTOR DRIVE	1	244420A4	0714185
4	SEPARATOR DRIVE	1	191241C3	0744328
5	AUXILIARY DRIVE	1	1541700C1	0723228 EE-TECH
6	GRAIN TANK UNLOADER DRIVE	1	191290C1	0102257
8	FEEDER JACKSHAFT	1	87629602	0744360
8	FEEDER JACKSHAFT	1	393750A1	0744379
9	FEEDER DRIVE	1	192738C1	0744366
9	FEEDER DRIVE	1	1315168C1	0744397
10	CLEANING FAN DRIVE	1	1541569C1	0310155
11	CLEANING FAN DRIVE	1	84462590	0502215
12	ELEVATOR DRIVE	1	/	/
13	STRAW SPREADER DRIVE	1	84172256	0701422
14	STRAW CHOPPER DRIVE	1	1315265C1	0323229
14	WITHOUT STRAW CHOOPER	1	87476487	0705492
14	WITH STRAW CHOPPER	1	87476486	0705388

2365 - 2366

			OE	
1	ALTERNATOR, FAN AND WATERPUMP DRIVE	1	J911572	0785286
2	AIR CONDITIONING COMPRESSOR DRIVE	1	396829R1	0172219
3	STRAW SPREADER DRIVE	1	196371C1	0701422
5	STRAW CHOPPER DRIVE	1	1347157C1	0123242 EE-TECH
6	UNLOADING AUGER DRIVE	1	191290C1	0102257
7	FEEDER DRIVE WITHOUT ROCK TRAP	1	192738C1	0744366
7	FEEDER DRIVE WITH ROCK TRAP	1	1315068C1	0744328
8	CLEANING FAN DRIVE	1	301146A1	0310157
9	ELEVATOR DRIVE UNIT	1	186509C2	0705492
10	SEPARATOR DRIVE	1	191241C3	0744328
11	ROTOR VARIATOR DRIVE	1	244420A1	0714185
13	AUXILIARY PUMP DRIVE	1	124572A1	0123224
14	FAN JACKSHAFT DRIVE	1	301111A1	1402217
15	FEEDER JACKSHAFT DRIVE	1	1313097C3	0244357
15	FEEDER JACKSHAFT DRIVE	1	1308489C2	0744379
16	CLEANING UNIT DRIVE	1	181055C1	0705388

2388

			OE	
1	ALTERNATOR, FAN AND WATERPUMP DRIVE	1	J911572	0785286
2	AIR CONDITIONING COMPRESSOR DRIVE	1	396829R1	0172219
3	STRAW SPREADER DRIVE	1	196371C1	0701422
5	STRAW CHOPPER DRIVE	1	1347157C1	0123242 EE-TECH
6	UNLOADING AUGER DRIVE	1	198217C1	☎
7	FEEDER DRIVE WITHOUT ROCK TRAP	1	192738C1	0744366
7	FEEDER DRIVE WITH ROCK TRAP	1	1315068C1	0744328
8	CLEANING FAN DRIVE	1	301146A1	0310157
9	ELEVATOR DRIVE UNIT	1	186509C2	0705492
10	SEPARATOR DRIVE	1	1541702C1	0744362
11	ROTOR VARIATOR DRIVE	1	244423A1	0766322
13	AUXILIARY PUMP DRIVE	1	124573A1	0723228 EE-TECH
14	FAN JACKSHAFT DRIVE	1	317904A1	0202245
15	FEEDER JACKSHAFT DRIVE	1	1308489C2	0744379
15	FEEDER JACKSHAFT DRIVE	1	1313097C3	0244357
16	CLEANING UNIT DRIVE	1	181055C1	0705388

CASE INTL. HARVESTER

5088

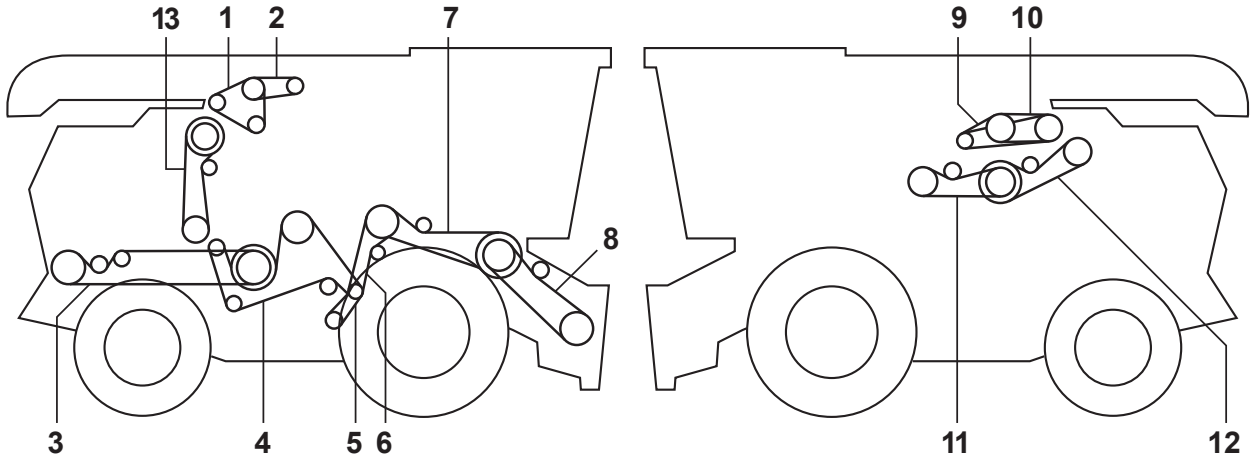

			OE	
1	FAN DRIVE	1	87755884	0285309
2	A/C COMPRESSOR	1	87311867	0172206
3	STRAW SPREADER DRIVE	1	84163222	1501475
4	CLEANING SYSTEM DRIVE (WITH BEATER)	1	87476487	0705492
4	CLEANING SYSTEM DRIVE (WITH CHOPPER)	1	87476486	0705388
5	CLEANING FAN DRIVE	1	301146A1	0310157
6	FAN JACKSHAFT DRIVE	1	87642957	2602244
7	FEEDER DRIVE (WITH ROCK TRAP)	1	87629601	0744389
7	FEEDER DRIVE WITHOUT ROCK TRAP	1	87629602	0744360
8	HEADER DRIVE (WITH ROCK TRAP)	1	87332159	0757355
8	HEADER DRIVE WITHOUT ROCK TRAP	1	87332161	0757373
9	SEPARATOR DRIVE	1	84137716	0740362
10	ROTOR DRIVE	1	84194650	0714650
11	UNLOADER DRIVE	1	87566055	1402291
12	AUXILIARY PUMP DR (W/2.5 BU/SEC UNLOADER)	1	87330894	0723242 EE-TECH
12	AUXILIARY PUMP DR (W/3.0 BU/SEC UNLOADER)	1	87549556	0224243 EE-TECH
13	STRAW CHOPPER DRIVE	1	87330903	0723248

6000 - 6500

			OE	
10		1	T911557	0785276

6088

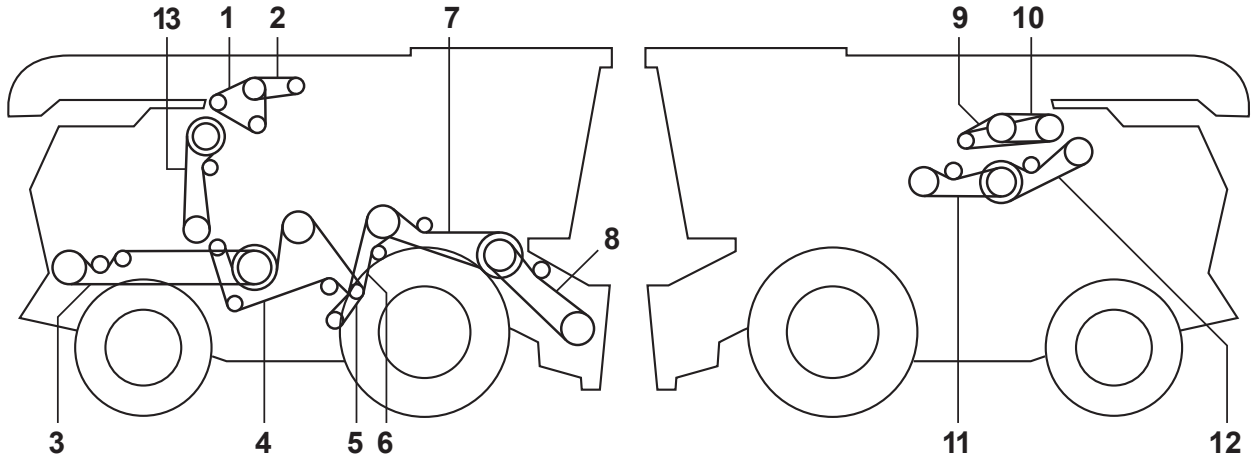

			OE	
1	FAN DRIVE	1	87755884	0285309
2	A/C COMPRESSOR	1	87311867	0172206
3	STRAW SPREADER DRIVE	1	84163222	1501475
4	CLEANING SYSTEM DRIVE (WITH BEATER)	1	87476487	0705492
4	CLEANING SYSTEM DRIVE (WITH CHOPPER)	1	87476486	0705388
5	CLEANING FAN DRIVE	1	301146A1	0310157
6	FAN JACKSHAFT DRIVE	1	87642957	2602244
7	FEEDER DRIVE (WITH ROCK TRAP)	1	87629601	0744389
7	FEEDER DRIVE WITHOUT ROCK TRAP	1	87629602	0744360
8	HEADER DRIVE (WITH ROCK TRAP)	1	87332159	0757355
8	HEADER DRIVE WITHOUT ROCK TRAP	1	87332161	0757373
9	SEPARATOR DRIVE	1	84137716	0740362
10	ROTOR DRIVE	1	87615553	0751553
11	UNLOADER DRIVE	1	87549557	0727338
12	AUXILIARY PUMP DR (W/2.5 BU/SEC UNLOADER)	1	87330894	0723242 EE-TECH
12	AUXILIARY PUMP DR (W/3.0 BU/SEC UNLOADER)	1	87549556	0224243 EE-TECH
13	STRAW CHOPPER DRIVE	1	87330903	0723248

CASE INTL. HARVESTER

6130

			OE	
1	STRAW CHOPPER	1	87476486	0705388
2	BEATER	1	87476487	0705492
3	UNLOAD DRIVE, 61/7130	1	87549557	0727338
4	UNLOAD DRIVE, 5130	1	87566055	1402291
5	ROTOR DRIVE, 61/7130	1	87615553	0751553
6	ROTOR DRIVE, 5130	1	84194650	0714650
7	FEEDER DRIVE WITH ROCK TRAP	1	87629601	0744389
8	FEEDER DRIVE WITHOUT ROCK TRAP	1	87629602	0744360
9	JACKSHAFT/FAN DRIVE	1	87642957	2602244
10	FAN DRIVE	1	84150266	1472264
11	STRAW SPREADER DRIVE	1	84163222	1501475
12	AIRCONDITIONING COMPRESSOR	1	84292913	0385323
13	ALTERNATOR	1	84312027	0785256
14	HEADER DRIVE WITHOUT ROCK TRAP	1	84365262	0747387
15	PTO	1	84406044	0740417
16	JACKSHAFT DRIVE	1	84548651	0723248
17	STRAW CHOPPER	1	87330903	0723248
18	HEADER DRIVE	1	87332161	0757373
19	FAN DRIVE	1	301146A1	0310157

6140

			OE	
1	ALTERNATOR AIRCONDITIONING	1	84292913	0385323
2	ALTERNATOR	1	84312027	0785256
3	AIRCONDITIONING	1	87489502	0372231
4	ENGINE FAN DRIVE	1	84150266	1472264
5	UNLOADER, MID JACKSHAFT	1	84548651	0723248
6	SEPARATOR DRIVE	1	84406044	0740417
7	FEEDER DRIVE WITH ROCK TRAP	1	87629601	0744389
8	FEEDER DRIVE WITHOUT ROCK TRAP	1	87629602	0744360
9	HEADER DRIVE WITH ROCK TRAP	1	47455617	☎
10	HEADER DRIVE WITHOUT ROCK TRAP	1	47616842	1925345
11	ROTOR GEARBOX	1	87714971	0751553
12	ROTOR GEARBOX	1	84194650	0714650
13	CLEANING FAN JACKSHAFT	1	87642957	2602244
14	CLEANING FAN DRIVE	1	301146A1	0310157
15	UNLOADER DRIVE	1	87549557	0727338
16	UNLOADER DRIVE	1	87566055	1402291
17	SPREADER DRIVE	1	84163222	1501475
18	DISCHARGE BEATER	1	87476487	0705492
19	STRAW CHOPPER DRIVE	1	87330903	0723248
20	AIR SCREEN DRIVE	1	87583785	0700147
21	STRAW CHOPPER	2	87476486	0705388

CASE INTL. HARVESTER

7010

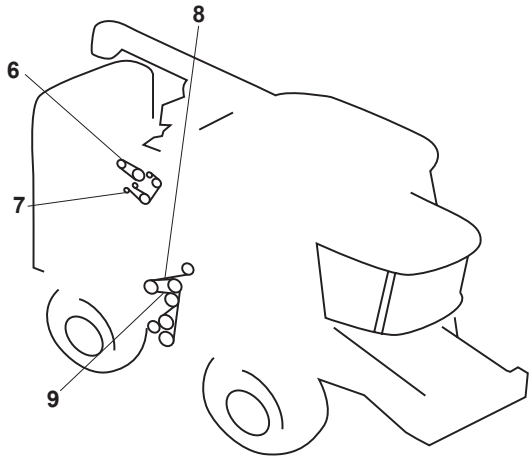

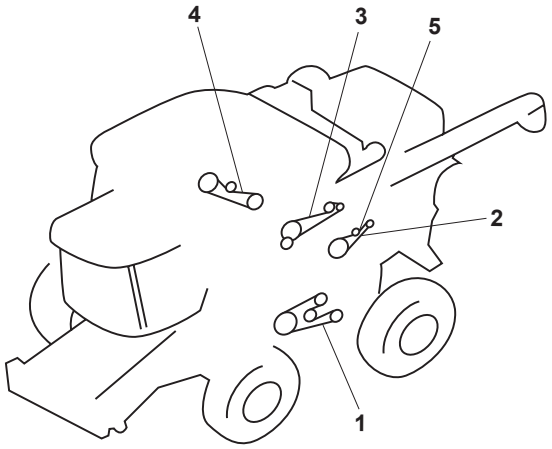

			OE	
1	SHOE DRIVE	1	87317063	0202275
2	BEATER DRIVE	1	86517680	1224272 EE-TECH
3	UNLOADING DRIVE	1	87011585	0323285
4		1	86975809	0702295
5	STRAW CHOPPER DRIVE	1	86976208	0224247 EE-TECH
5	STRAW CHOPPER DRIVE	1	87283315	1224245
6	ALTERNATOR, AIRCONDITIONING, WATER PUMP	1	504212528	0342161
7	FAN	1	50037165	0386283
8		1	86975809	0702295
9	TAILINGS PROCESSOR	1	87283139	0305353

7088

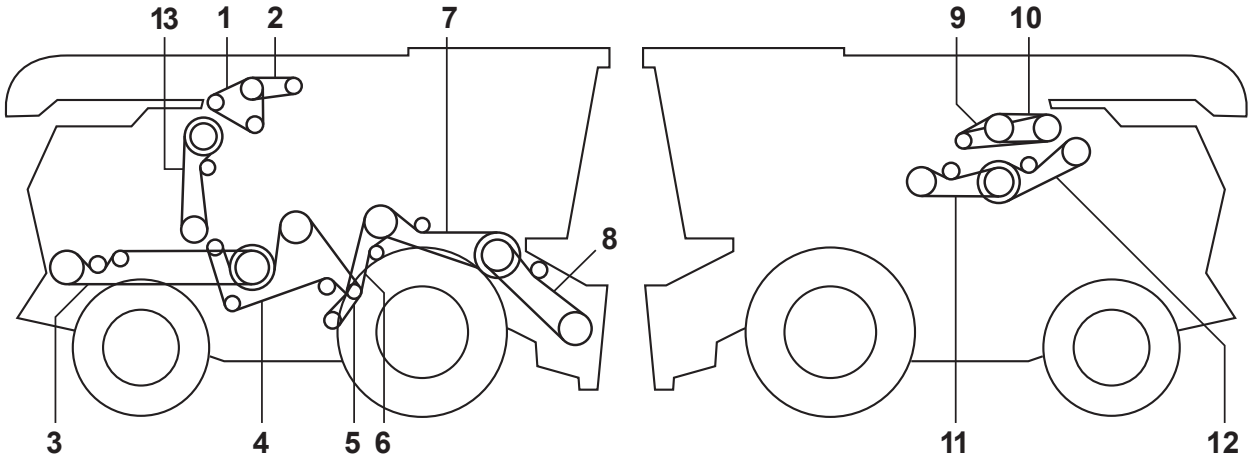

			OE	
1	FAN DRIVE	1	87755884	0285309
2	A/C COMPRESSOR	1	87311867	0172206
3	STRAW SPREADER DRIVE	1	84163222	1501475
4	CLEANING SYSTEM DRIVE (WITH BEATER)	1	87476487	0705492
4	CLEANING SYSTEM DRIVE (WITH CHOPPER)	1	87476486	0705388
5	CLEANING FAN DRIVE	1	301146A1	0310157
6	FAN JACKSHAFT DRIVE	1	87642957	2602244
7	FEEDER DRIVE (WITH ROCK TRAP)	1	87629601	0744389
7	FEEDER DRIVE WITHOUT ROCK TRAP	1	87629602	0744360
8	HEADER DRIVE (WITH ROCK TRAP)	1	87332159	0757355
8	HEADER DRIVE WITHOUT ROCK TRAP	1	87332161	0757373
9	SEPARATOR DRIVE	1	84137716	0740362
10	ROTOR DRIVE	1	87615553	0751553
11	UNLOADER DRIVE	1	87549557	0727338
12	AUXILIARY PUMP DR (W/2.5 BU/SEC UNLOADER)	1	87330894	0723242 EE-TECH
12	AUXILIARY PUMP DR (W/3.0 BU/SEC UNLOADER)	1	87549556	0224243 EE-TECH
13	STRAW CHOPPER DRIVE	1	87330903	0723248

CASE INTL. HARVESTER

7120

			OE	
1		1	500371653	0386283
2	ELEVATOR DRIVE	1	86975809	0702295
3	SHOE DRIVE	1	87317063	0202275
4	TAILINGS DRIVE	1	87283139	0305353
5	STRAW CHOPPER DRIVE (LOW SPEED)	1	86517680	1224272 EE-TECH
6	STRAW CHOPPER DRIVE TRANSMISSION (HIGH SPEED - 2800 RPM)	1	87283315	1224245
7	UNLOADING DRIVE	1	87011585	0323285

7130

			OE	
1	STRAW CHOPPER	1	87476486	0705388
2	BEATER DRIVE	1	87476487	0705492
3	UNLOAD DRIVE, 61/7130	1	87549557	0727338
4	UNLOAD DRIVE, 5130	1	87566055	1402291
5	ROTOR DRIVE, 61/7130	1	87615553	0751553
6	ROTOR DRIVE, 5130	1	84194650	0714650
7	FEEDER DRIVE WITH ROCK TRAP	1	87629601	0744389
8	FEEDER DRIVE WITHOUT ROCK TRAP	1	87629602	0744360
9	JACKSHAFT/FAN DRIVE	1	87642957	2602244
10	FAN DRIVE	1	84150266	1472264
11	STRAW SPREADER DRIVE	1	84163222	1501475
12	AIRCONDITIONER COMPRESSOR	1	84292913	0385323
13	ALTERNATOR, 5130 ONLY	1	84312027	0785256
14	HEADER DRIVE, WITHOUT ROCK TRAP	1	84365262	0747387
15	PTO	1	84406044	0740417
16	JACKSHAFT DRIVE	1	84548651	0723248
17	STRAW CHOPPER	1	87330903	0723248
18	HEADER DRIVE	1	87332161	0757373
19	FAN DRIVE	1	301146A1	0310157

7140

			OE	Gates
1	ALTERNATOR AIRCONDITIONG	1	84292913	0385323
2	ALTERNATOR	1	84312027	0785256
3	AIRCONDITIONER	1	87489502	0372231
4	ENGINE FAN DRIVE	1	84150266	1472264
5	UNLOADER, MID JACKSHAFT	1	84548651	0723248
6	SEPARATOR DRIVE	1	84406044	0740417
7	FEEDER DRIVE WITH ROCK TRAP	1	87629601	0744389
8	FEEDER DRIVE WITHOUT ROCK TRAP	1	87629602	0744360
9	HEADER DRIVE WITH ROCK TRAP	1	47455617	☎
10	HEADER DRIVE WITHOUT ROCK TRAP	1	47616842	1925345
11	ROTOR GEARBOX	1	87714971	0751553
12	ROTOR GEARBOX	1	84194650	0714650
13	CLEANING FAN JACKSHAFT	1	87642957	2602244
14	CLEANING FAN DRIVE	1	301146A1	0310157
15	UNLOADER DRIVE	1	87549557	0727338
16	UNLOADER DRIVE	1	87566055	1402291
17	SPREADER DRIVE	1	84163222	1501475
18	DISCHARGE BEATER	1	87476487	0705492
19	STRAW CHOPPER DRIVE	1	87330903	0723248
20	AIR SCREEN DRIVE	1	87583785	0700147
21	STRAW CHOPPER	1	87476486	0705388

7230

			OE	Gates
1	ALTERNATOR DRIVE	1	84247607	0385295
2	AIR CONDITIONING DRIVE	1	84223612	0187250
3	UNLOADING, DUAL DRIVE	1	84345673	0302240
4	UNLOADING, DUAL DRIVE	1	84345674	2823241 EE-TECH
5	UNLOADING DRIVE, STANDARD	1	84376860	2624278
6	ROTARY AIR SCREEN	1	86514512	0300267
7	STRAW CHOPPER/BEATER DRIVE	1	86517680	1224272 EE-TECH
8	GRAIN ELEVATOR DRIVE	1	86975809	0702295
9	TAILINGS DRIVE	1	87283139	0305353
10	STRAW CHOPPER DRIVE	1	86517680	1224272 EE-TECH
11	FAN DRIVE	1	87526140	0372255
12	ROTARY AIR SCREEN DRIVE	1	87607871	1100162
13	FAN DRIVE	1	87733431	0100164
14	FAN DRIVE	1	47490848	0372262
15	ROTARY AIR SCREEN DRIVE	1	9842161	0300276
16	ENGINE DRIVE	1	84292639	0285346
17	SHOE DRIVE	1	87317063	0202275

CASE INTL. HARVESTER

7240

			OE	
1	A/C COMPRESSOR	1	84238514	0187250
2	FAN DRIVE	1	47463606	0707134
2	FAN DRIVE	1	47411931	0707132
3	ALTERNATOR	1	47506727	0342200
3	ALTERNATOR	1	47513876	0189308
3	ALTERNATOR	1	47569912	1985296
4	AIR SCREEN	1	47635775	☎
4	AIR SCREEN	1	47635791	☎
5	VACUUM FAN	1	47628753	☎
5	VACUUM FAN	1	47623161	☎
6	CLEANING SYSTEM DRIVE	1	87317063	0202275
7	CLEAN GRAIN ELEVATOR DRIVE, SINGLE/ 2 SPEED	1	86975809	0702295
8	SINGLE DRIVE, UNLOAD, 4.0 BU/ SEC	1	84376860	2624278
9	DUAL DRIVE, UNLOAD, 4.0/ 4.5 BU/SEC, CLUTCH	1	84345673	0302240
10	DUAL DRIVE, UNLOAD, 4.0/ 4.5 BU/SEC, DRIVE	1	84345674	2823241 EE-TECH
11	TAILINGS PROCESSOR	1	87283139	0305353
12	CHOPPER DRIVE	1	86517680	1224272 EE-TECH
13	OSCILLATING CHAFF PAN	1	84154916	☎

8010

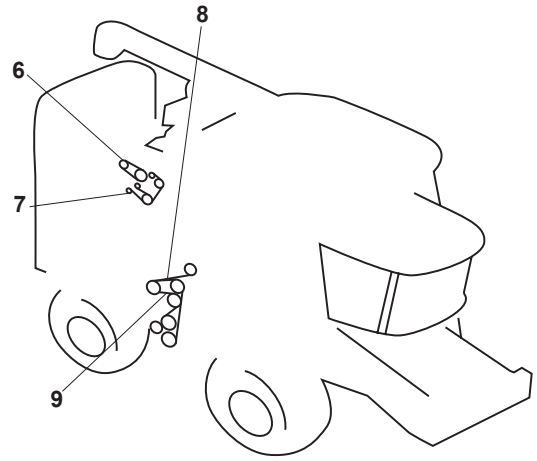

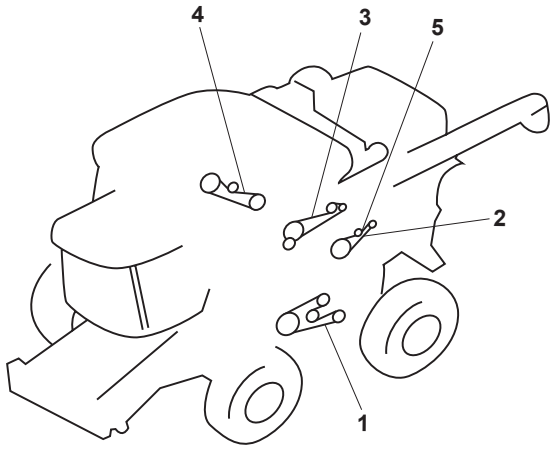

			OE	
1	SHOE DRIVE	1	87317063	0202275
2	BEATER DRIVE	1	86517680	1224272 EE-TECH
3	UNLOADING DRIVE	1	87011585	0323285
4		1	86975809	0702295
5	STRAW CHOPPER DRIVE	1	86976208	0224247 EE-TECH
5	STRAW CHOPPER DRIVE	1	87283315	1224245
6	WATER PUMP	1	87282333	0285348
7	FAN	1	87282305	0386278
8		1	86975809	0702295
9	TAILINGS PROCESSOR	1	87283139	0305353

CASE INTL. HARVESTER

8120

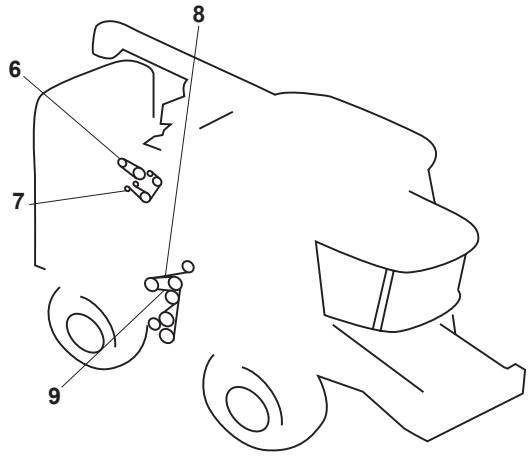

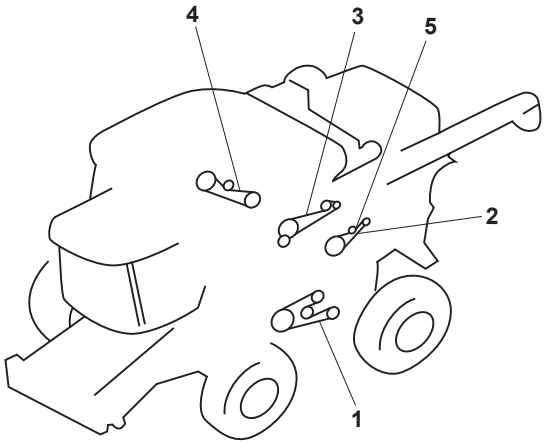

			OE	
1	SHOE DRIVE	1	87317063	0202275
2	BEATER DRIVE	1	86517680	1224272 EE-TECH
3	UNLOADING DRIVE	1	87011585	0323285
4		1	86975809	0702295
5	STRAW CHOPPER DRIVE	1	86976208	0224247 EE-TECH
5	STRAW CHOPPER DRIVE	1	87283315	1224245
6	WATER PUMP	1	87282333	0285348
6	WATER PUMP	1	504212528	0342161
6		1	504368979	0187250
7	FAN	1	87282305	0386278
7	FAN	1	500371653	0386283
7	FAN	1	504049425	0385295
8		1	86975809	0702295
9	TAILINGS PROCESSOR	1	87283139	0305353

CASE INTL. HARVESTER

8230

			OE	
1	ALTERNATOR DRIVE	1	84247607	0385295
2	AIRCONDITIONING DRIVE	1	84223612	0187250
3	UNLOADING,DUAL DRIVE	1	84345673	0302240
4	UNLOADING,DUAL DRIVE	1	84345674	2823241 EE-TECH
5	UNLOADING DRIVE, STANDARD	1	84376860	2624278
6	ROTARY AIR SCREEN	1	86514512	0300267
7	STRAW CHOPPER/BEATER DRIVE	1	86517680	1224272 EE-TECH
8	GRAIN ELEVATOR DRIVE	1	86975809	0702295
9	TAILINGS DRIVE	1	87283139	0305353
10	STRAW CHOPPER DRIVE	1	86517680	1224272 EE-TECH
11	FAN DRIVE	1	87526140	0372255
12	ROTARY AIR SCREEN DRIVE	1	87607871	1100162
13	FAN DRIVE	1	87733431	0100164
14	FAN DRIVE	1	47490848	0372262
15	ROTARY AIR SCREEN DRIVE	1	9842161	0300276
16	ENGINE DRIVE	1	84292639	0285346
17	SHOE DRIVE	1	87317063	0202275

8240

			OE	
1	A/C COMPRESSOR	1	84238514	0187250
2	FAN DRIVE	1	47463606	0707134
2	FAN DRIVE	1	47411931	0707132
3	ALTERNATOR	1	47506727	0342200
3	ALTERNATOR	1	47513876	0189308
3	ALTERNATOR	1	47569912	1985296
4	AIR SCREEN	1	47635775	☎
4	AIR SCREEN	1	47635791	☎
5	VACUUM FAN	1	47628753	☎
5	VACUUM FAN	1	47623161	☎
6	CLEANING SYSTEM DRIVE	1	87317063	0202275
7	CLEAN GRAIN ELEVATOR DRIVE, SINGLE/ 2 SPEED	1	86975809	0702295
8	SINGLE DRIVE, UNLOAD, 4.0 BU/ SEC	1	84376860	2624278
9	DUAL DRIVE, UNLOAD, 4.0/ 4.5 BU/SEC CLUTCH	1	84345673	0302240
10	DUAL DRIVE, UNLOAD, 4.0/ 4.5 BU/SEC, DRIVE	1	84345674	2823241 EE-TECH
11	TAILINGS PROCESSOR	1	87283139	0305353
12	CHOPPER DRIVE	1	86517680	1224272 EE-TECH
13	OSCILLATING CHAFF PAN	1	84154916	☎

8840

			OE	
1		1	T911567	0785276

CASE INTL. HARVESTER

9120

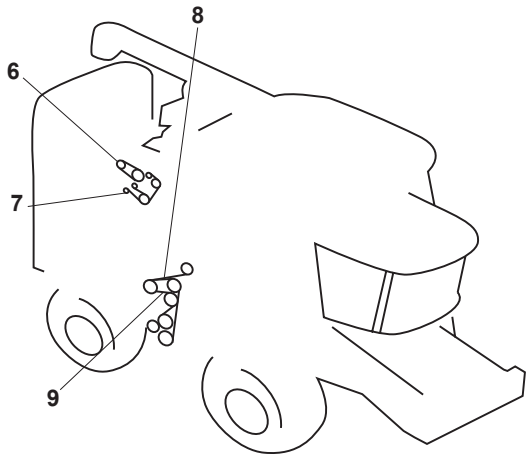

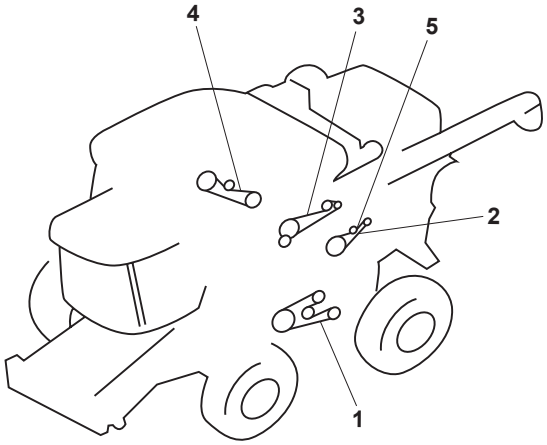

			OE	
1	SHOE DRIVE	1	87317063	0202275
2	BEATER DRIVE	1	86517680	1224272 EE-TECH
3	UNLOADING DRIVE	1	87011585	0323285
4		1	86975809	0702295
5	STRAW CHOPPER DRIVE	1	86976208	0224247 EE-TECH
5	STRAW CHOPPER DRIVE	1	87283315	1224245
6	WATER PUMP	1	87282333	0285348
6	WATER PUMP	1	504212528	0342161
6		1	504368979	0187250
7	FAN	1	87282305	0386278
7	FAN	1	500371653	0386283
7	FAN	1	504049425	0385295
8		1	86975809	0702295
9	TAILINGS PROCESSOR	1	87283139	0305353

9230

			OE	
1	ALTERNATOR DRIVE	1	84247607	0385295
2	A/C DRIVE	1	84223612	0187250
3	UNLOADING,DUAL DRIVE	1	84345673	0302240
4	UNLOADING,DUAL DRIVE	1	84345674	2823241 EE-TECH
5	UNLOADING DRIVE, STANDARD	1	84376860	2624278
6	ROTARY AIR SCREEN	1	86514512	0300267
7	STRAW CHOPPER/BEATER DRIVE	1	86517680	1224272 EE-TECH
8	GRAIN ELEVATOR DRIVE	1	86975809	0702295
9	TAILINGS DRIVE	1	87283139	0305353
10	STRAW CHOPPER DRIVE	1	86517680	1224272 EE-TECH
11	FAN DRIVE	1	87526140	0372255
12	ROTARY AIR SCREEN DRIVE	1	87607871	1100162
13	FAN DRIVE	1	87733431	0100164
14	FAN DRIVE	1	47490848	0372262
15	ROTARY AIR SCREEN DRIVE	1	9842161	0300276
16	ENGINE DRIVE	1	84292639	0285346
17	SHOE DRIVE	1	87317063	0202275

CASE INTL. HARVESTER

9240

			OE	
1	A/C COMPRESSOR	1	84238514	0187250
2	FAN DRIVE	1	47463606	0707134
2	FAN DRIVE	1	47411931	0707132
3	ALTERNATOR	1	47506727	0342200
3	ALTERNATOR	1	47513876	0189308
3	ALTERNATOR	1	47569912	1985296
4	AIR SCREEN	1	47635775	☎
4	AIR SCREEN	1	47635791	☎
5	VACUUM FAN	1	47628753	☎
5	VACUUM FAN	1	47623161	☎
6	CLEANING SYSTEM DRIVE	1	87317063	0202275
7	CLEAN GRAIN ELEVATOR DRIVE, SINGLE/ 2 SPEED	1	86975809	0702295
8	SINGLE DRIVE, UNLOAD, 4.0 BU/ SEC	1	84376860	2624278
9	DUAL DRIVE, UNLOAD, 4.0/ 4.5 BU/SEC CLUTCH	1	84345673	0302240
10	DUAL DRIVE, UNLOAD, 4.0/ 4.5 BU/SEC, DRIVE	1	84345674	2823241 EE-TECH
11	TAILINGS PROCESSOR	1	87283139	0305353
12	CHOPPER DRIVE	1	86517680	1224272 EE-TECH
13	OSCILLATING CHAFF PAN	1	84154916	☎

16810

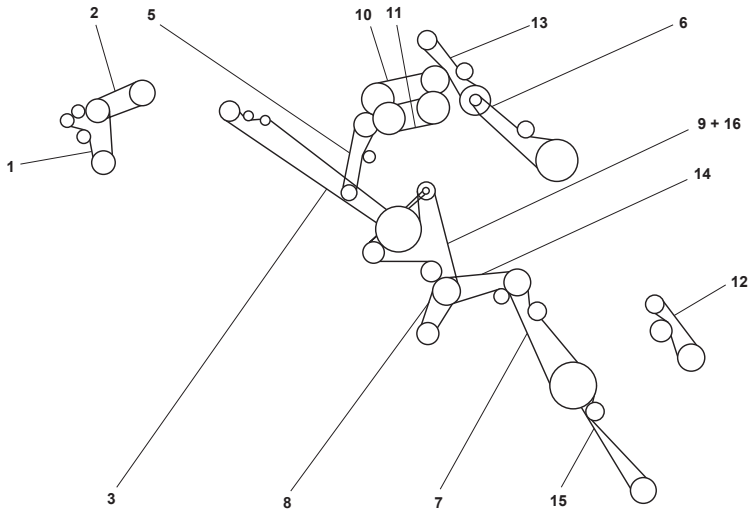

			OE	
1	WATER PUMP, FAN, ALTERNATOR	1	J911572	0785286
1	WATER PUMP, FAN, ALTERNATOR	1	J911574	0785278
2	AIR CONDITIONING COMPRESSOR	1	396829R1	0172219
3	STRAW SPREADER DRIVE	1	196371C1	0701422
5	STRAW CHOPPER DRIVE	1	1347160C1	0723264 EE-TECH
5	STRAW CHOPPER DRIVE	1	1315266C1	1123251
6	UNLOADER AUGER DRIVE	1	191291C1	0702274
6	UNLOADER AUGER DRIVE	1	1989217C1	0302281
7	FEEDER DRIVE	1	194528C1	0744354
8	CLEANING FAN DRIVE	1	1541569C1	0310155
8	CLEANING FAN DRIVE	1	195396C2	0710159
9	ELEVATOR DRIVE UNIT	1	186509C2	0705492
10	SEPARATOR DRIVE	1	1330499C1	0724325 EE-TECH
10	SEPARATOR DRIVE	1	1541702C1	0744362
11	ROTOR DRIVE	1	244422A1	0714216
12	REEL DRIVE PUMP	1	1315226C1	0202168
12	REEL DRIVE PUMP	1	1321565C1	1602150
12	REEL DRIVE PUMP	1	1330311C2	1401137
12	REEL DRIVE PUMP	1	1979607C1	☎
13	AUXILIARY PUMP DRIVE	1	1347358C1	0323233 EE-TECH
13	AUXILIARY PUMP DRIVE	1	1541700C1	0723228 EE-TECH
13	AUXILIARY PUMP DRIVE	1	1970116C1	0302197
14	FAN JACKSHAFT DRIVE	1	188213C1	2602244
15	FEEDER JACKSHAFT DRIVE	1	1313097C3	0244357
15	FEEDER JACKSHAFT DRIVE	1	1308489C2	0744379
16	CLEANING UNIT DRIVE WITH STRAW CHOPPER	1	181055C1	0705388
19	FAN JACKSHAFT DRIVE	1	181359C1	2002298
20	SLOW SPEED FAN JACKSHAFT	1	610521R1	0301141
21	CHAFT SPREADER UPPER	1	123305A1	0701490
22	CHAFT SPREADER LOWER	1	123307A1	0201155

CASE INTL. HARVESTER

AFX 8010

			OE	
1	FAN DRIVE	1	87282305	0386278
2	A/C COMPRESSOR, ALT, WATER PUMP	1	87282333	0285348
3	SHOE DRIVE	1	87317063	0202275
4	BUBBLE UP DRIVE - RIGHT SIDE	1	86975809	0702295
5	TAILINGS PROCESSOR	1	87283139	0305353
6	ROTARY SCREEN	1	9513136	0300256
7	BEATER DRIVE	1	86517680	1224272 EE-TECH
8	UNLOADER DRIVE	1	87011585	0323285
9	STRAW CHOPPER DRIVE	1	86976208	0224247 EE-TECH
9	STRAW CHOPPER DRIVE	1	87283315	1224245

COLUMBUS

			OE	
1	BALER	1	506880.0	1430283
1	BALER	1	506940.0	1430658
2	ALTERNATOR DRIVE	1	624131.0	1401081
2	ALTERNATOR DRIVE	1	750624.0	0101085
2	ALTERNATOR DRIVE	1	750296.0	0101085
3	KNIFE DRIVE	1	801221.0	1430231
3	KNIFE DRIVE	1	756051.0	0202168
4	TANK UNLOADER DRIVE	1	756059.0	1430228
5	CUTTING TABLE DRIVE	1	772657.1	0102189
6	SPREADER GRAIN IN TANK	1	775698.0	1401161
7	PICK UP DRIVE	1	800309.0	2301174
8	SHAKER SHOE FANNING MILL	1	506023.0	1430480
9	THRESHING MACHINE	1	801222.0	1401231
10	TRACTION DRIVE	1	750294.0	2001143
11	TRACTION DRIVE	1	751112.0	1499326
12	SHAKER SHOE FANNING MILL	1	772658.0	1430746
12	SHAKER SHOE FANNING MILL	1	772660.0	1430751
13	STRAW WALKER ELEVATOR	1	774100.0	1454423
13	STRAW WALKER ELEVATOR	1	773313.0	1429391

COMMANDOR 114

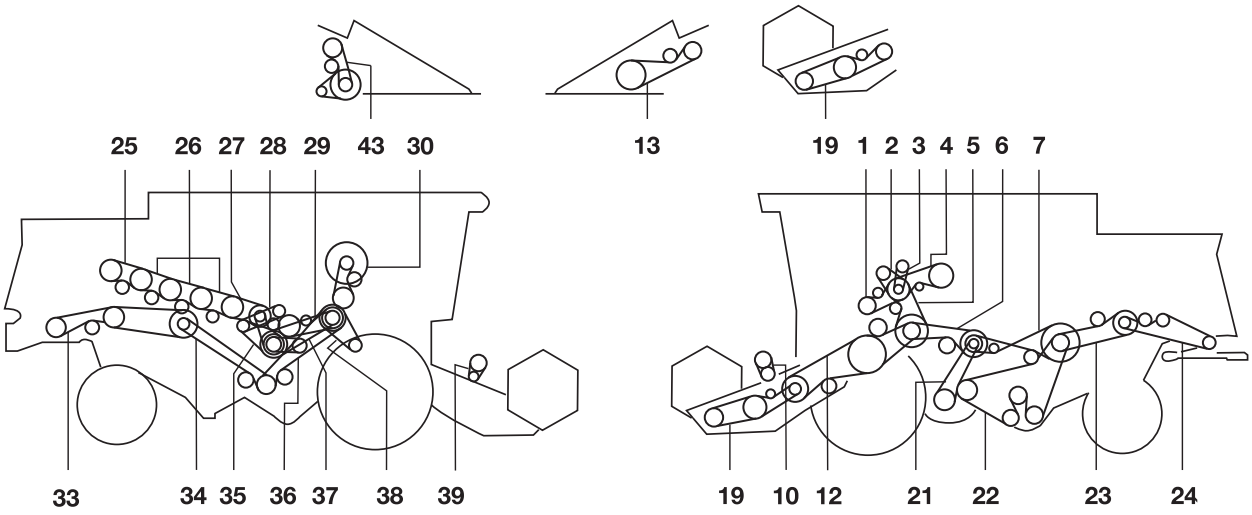

			OE	
1		1	629279.0	2025172
2		1	629002.1	1601103
3		1	629908.1	1443160
4		1	629763.0	1423210
5		1	629000.1	1425229 EE-TECH
6		1	603337.0	0202222
7		1	644141.1	1429343
10	TO 5.1 M CUTTING TABLE	1	670224.1	1462186
12		2	603017.3	1402436
13	FOR MAIZE PICKER	1	692149.0	1424269 EE-TECH
13	FOR MAIZE PICKER	1	692150.0	1424276
16	FROM 6.0 M CUTTING TABLE	1	671013.1	0202230
19	TO 5.1 M CUTTING TABLE	1	713506.2	0101200
21		1	603380.1	1410210
22		1	609762.0	0323472
23	FOR STRAW DISTRIBUTOR	1	506671.2	1454323
24	FOR STRAW DISTRIBUTOR	1	640653.1	1901251
25		1	644014.1	1902144
26		1	644015.1	1423179
27		1	644016.1	1424181
29		1	064168.2	1424251
30		1	233843.1	1401127
33	FOR MAIZE	2	061872.0	1402336
33	FOR GRAIN	1	061701.2	1402358
34	FOR STRAW CHOPPER	1	061700.1	1423319
35		1	603247.1	1424183
37		1	644014.1	1902144
38	CYLINDER N=650-1500 RPM	1	628630.0	1479291
38	CYLINDER N=500-1400 RPM	1	644177.0	1414168
39	FROM 6.0 M CUTTING TABLE	1	670224.1	1462186
43		1	680334.1	1424212

COMMANDOR 114 CS

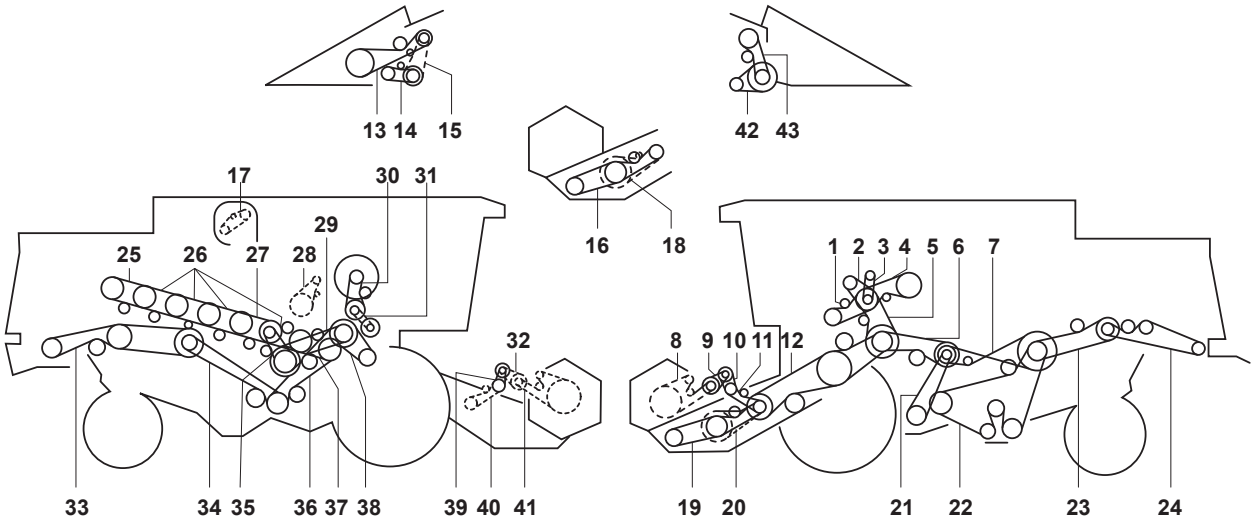

			OE	
1	GROUND DRIVE	1	629279.0	2025172
2	HYDRAULIC PUMP	1	629002.1	1601103
3	AIR CONDITIONER	1	629908.1	1443160
4	GRAIN TANK UNLOADING	1	629763.0	1423210
5	INTERMEDIATE DRIVE THRESHING MECHANISM	1	629000.1	1425229 EE-TECH
6	INTERMEDIATE DRIVE BLOWER	1	603337.0	0202222
7	INTERMEDIATE DRIVE SIEVE PAN	1	644141.1	1429343
8	TO 5.1 M CUTTERBAR	1	650193.0	Chain
9	TO 5.1 M CUTTERBAR	1	670229.2	Chain
10	TO 5.1 M CUTTERBAR	1	670224.1	1462186
11	TO 5.1 M CUTTERBAR	1	650191.2	Chain
12	FEEDER HOUSING CUTTERBAR	2	603017.3	1402436
13	FOR CORN PICKER	1	692149.0	1424269 EE-TECH
13	FOR CORN PICKER	1	692150.0	1424276
14	FOR CORN PICKER	1	692166.0	Chain
15	FOR CORN PICKER	1	503445.0	Chain
16	FROM 6.0 M CUTTERBAR	1	671013.1	0202230
17	GRAIN ELEVATOR	1	646011.0	Chain
18	FROM 6.0 M CUTTERBAR	1	676277.0	Chain
19	TO 5.1 M CUTTERBAR	1	713506.2	0101200
20	TO 5.1 M CUTTERBAR	2	650174.0	Chain
21	BLOWER - VARIABLE SPEED DRIVE	1	603380.1	1410210
22	SIEVE BOX	1	609762.0	0323472
23	INTERMEDIATE DRIVE STRAW DISTRIBUTOR	1	506671.2	1454323
24	FOR STRAW SPREADER	1	640653.1	1901251
25	8. SEPARATOR DRUM	1	644014.1	1902144
26	3.5, 6.7 SEPARATOR DRUM	4	644015.1	1423179
27	4TH SEPARATOR DRUM	1	644016.1	1424181
28	GRAIN TANK UNLOADING	1	818101.0	Chain

COMMANDOR 114 CS (CONTINUED)

			OE	
29	INTERMEDIATE DRIVE DRUM VARIABLE SPEED	1	064168.2	1424251
30	ROTOR DRIVE	1	783430.1	1401129
30	TO No; 14900195	1	233843.1	1401127
31	RETURNS	1	600981.0	Chain
32	FROM 6.0 M CUTTERBAR	2	670229.2	Chain
33	CHOPPER, GRAIN	1	061701.2	1402358
33	CHOPPER, CORN	2	061872.0	1402336
34	INTERMEDIATE DRIVE II CHOPPER	1	061700.1	1423319
35	INTERMEDIATE DRIVE SEPARATOR DRUM	1	603247.1	1424183
36	INTERMEDIATE DRIVE I CHOPPER	1	061700.1	1423319
37	1STE AND 2ND SEPARATOR DRUM	1	644014.1	1902144
38	AT N = 650 - 1500 MIN-1	1	628630.0	1479291
38	AT N = 500 - 1400 MIN-1	1	644177.0	1414168
38	AT DRUM CHAIN DRIVE	1	603132.1	Chain
38	AT DRUM CHAIN DRIVE	1	609790.0	Chain
38	AT DRUM CHAIN DRIVE	1	603131.0	Chain
39	FROM 6.0 M CUTTERBAR	1	670224.1	1462186
40	FROM 6.0 M CUTTERBAR	2	670229.2	Chain
41	AT 6.0 M - 6.6 M	1	648166.0	Chain
41	AT 7.5 M - 9.0 M	1	645483.1	Chain
42	FOR HPH - G PICKER	1	695610.1	1499313
43	FOR HPH - G PICKER	1	680334.1	1424212

COMMANDOR 115

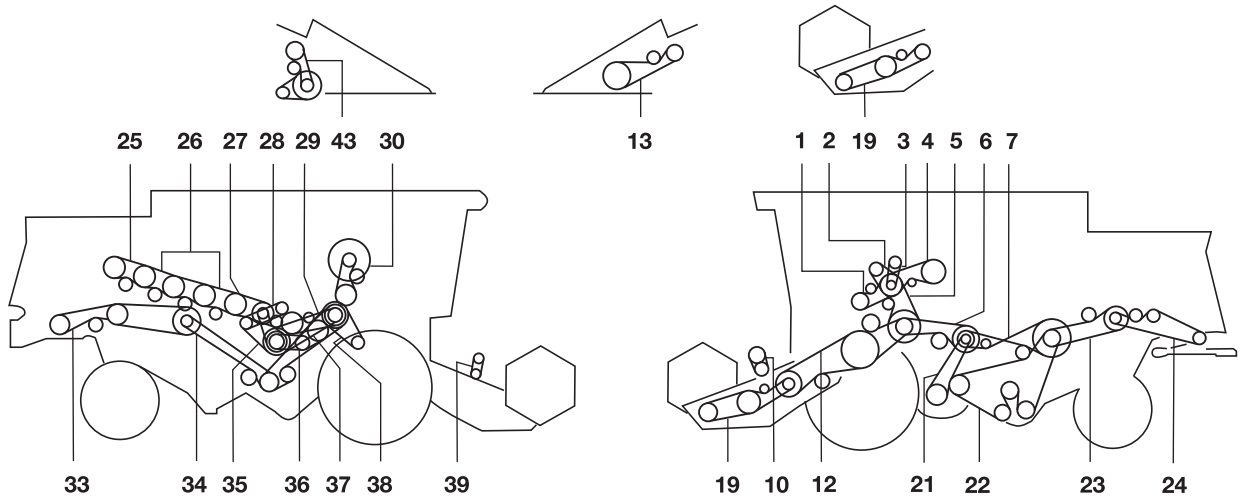

			OE	
1		1	644017.1	1426173
2		1	629002.1	1601103
3		1	629908.1	1443160
4		1	629763.0	1423210
5		1	644018.1	1426230
6		1	603337.0	0202222
7		1	644141.1	1429343
10	TO 5.1 M CUTTING TABLE	1	670224.1	1462186
12		2	603017.3	1402436
13	FOR MAIZE PICKER	1	692149.0	1424269 EE-TECH
13	FOR MAIZE PICKER	1	692150.0	1424276
16	FROM 6.0 M CUTTING TABLE	1	671013.1	0202230
19	TO 5.1 M CUTTING TABLE	1	713506.2	0101200
21		1	603380.1	1410210
22		1	609762.0	0323472
23	FOR STRAW DISTRIBUTOR	1	506671.2	1454323
24	FOR STRAW DISTRIBUTOR	1	640653.1	1901251
25		1	644014.1	1902144
26		1	644015.1	1423179
27		1	644016.1	1424181
29		1	064168.2	1424251
30		1	233843.1	1401127
33	FOR MAIZE	2	061872.0	1402336
33	FOR GRAIN	1	061701.2	1402358
34	FOR STRAW CHOPPER	1	061700.1	1423319
35		1	603247.1	1424183
36	FOR STRAW CHOPPER	1	061700.1	1423319
37		1	644014.1	1902144
38	CYLINDER N=650-1500 RPM	1	628630.0	1479291
38	CYLINDER N=500-1400 RPM	1	644177.0	1414168
39	FROM 6.0 M CUTTING TABLE	1	670224.1	1462186
42		1	695610.1	1499313
43		1	680334.1	1424212

COMMANDOR 115 CS

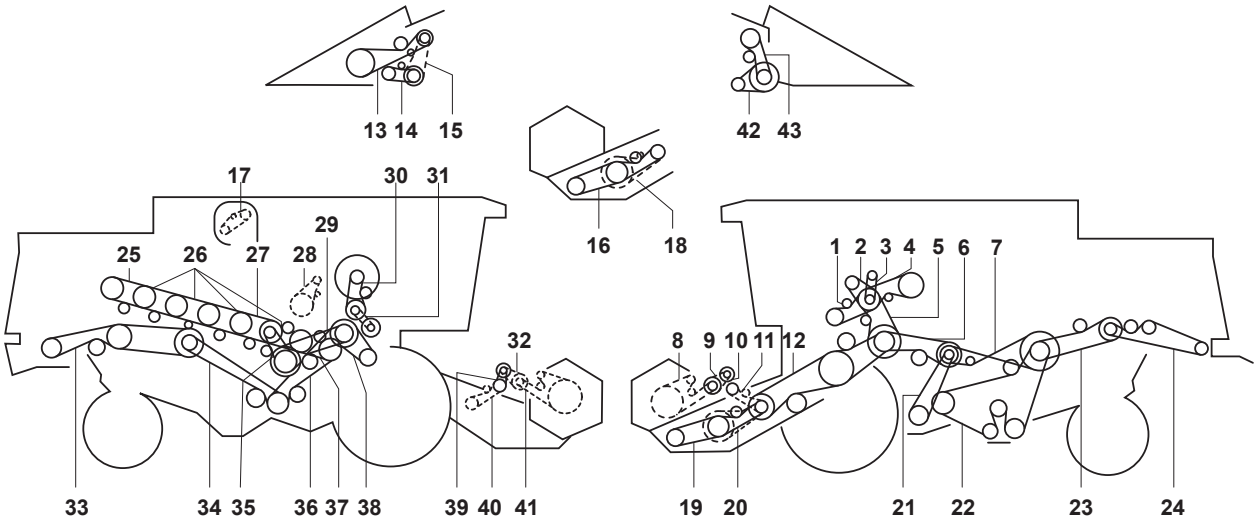

			OE	
1	GROUND DRIVE	1	644017.1	1426173
2	HYDRAULIC PUMP	1	629002.1	1601103
3	AIR CONDITIONER	1	629908.1	1443160
4	GRAIN TANK UNLOADING	1	629763.0	1423210
5	INTERMEDIATE DRIVE THRESHING MECHANISM	1	644018.1	1426230
6	INTERMEDIATE DRIVE BLOWER	1	603337.0	0202222
7	INTERMEDIATE DRIVE SIEVE PAN	1	644141.1	1429343
8	TO 5.1 M CUTTERBAR	1	650193.0	Chain
9	TO 5.1 M CUTTERBAR	1	670229.2	Chain
10	TO 5.1 M CUTTERBAR	1	670224.1	1462186
11	TO 5.1 M CUTTERBAR	1	650191.2	Chain
12	FEEDER HOUSING CUTTERBAR	2	603017.3	1402436
13	FOR CORN PICKER	1	692149.0	1424269 EE-TECH
13	FOR CORN PICKER	1	692150.0	1424276
14	FOR CORN PICKER	1	692166.0	Chain
15	FOR CORN PICKER	1	503445.0	Chain
16	FROM 6.0 M CUTTERBAR	1	671013.1	0202230
17	GRAIN ELEVATOR	1	646011.0	Chain
18	FROM 6.0 M CUTTERBAR	1	676277.0	Chain
19	TO 5.1 M CUTTERBAR	1	713506.2	0101200
20	TO 5.1 M CUTTERBAR	1	650174.0	Chain
21	BLOWER - VARIABLE SPEED DRIVE	1	603380.1	1410210
22	SIEVE BOX	1	609762.0	0323472
23	INTERMEDIATE DRIVE STRAW DISTRIBUTOR	1	506671.2	1454323
24	FOR STRAW SPREADER	1	640653.1	1901251
25	8. SEPARATOR DRUM	1	644014.1	1902144
26	3.5, 6.7 SEPARATOR DRUM	4	644015.1	1423179
27	4TH SEPARATOR DRUM	1	644016.1	1424181
28	GRAIN TANK UNLOADING	1	818101.0	Chain

COMMANDOR 115 CS (CONTINUED)

			OE	
29	INTERMEDIATE DRIVE DRUM VARIABLE SPEED	1	064168.2	1424251
30	ROTOR DRIVE	1	783430.1	1401129
30	TO No; 15800110	1	233843.1	1401127
31	RETURNS	1	600981.0	Chain
32	FROM 6.0 M CUTTERBAR	2	670229.2	Chain
33	CHOPPER, GRAIN	1	061701.2	1402358
33	CHOPPER, CORN	2	061872.0	1402336
34	INTERMEDIATE DRIVE II CHOPPER	1	061700.1	1423319
35	INTERMEDIATE DRIVE SEPARATOR DRUM	1	603247.1	1424183
36	INTERMEDIATE DRIVE I CHOPPER	1	061700.1	1423319
37	1STE AND 2ND SEPARATOR DRUM	1	644014.1	1902144
38	AT N = 650 - 1500 MIN-1	1	628630.0	1479291
38	AT N = 500 - 1400 MIN-1	1	644177.0	1414168
38	AT DRUM CHAIN DRIVE	1	603132.1	Chain
38	AT DRUM CHAIN DRIVE	1	609790.0	Chain
38	AT DRUM CHAIN DRIVE	1	603131.0	Chain
39	FROM 6.0 M CUTTERBAR	1	670224.1	1462186
40	FROM 6.0 M CUTTERBAR	2	670229.2	Chain
41	AT 6.0 M - 6.6 M	1	648166.0	Chain
41	AT 7.5 M - 9.0 M	1	645483.1	Chain
42	FOR HPH - G PICKER	1	695610.1	1499313
43	FOR HPH - G PICKER	1	680334.1	1424212

COMMANDOR 116 - 228

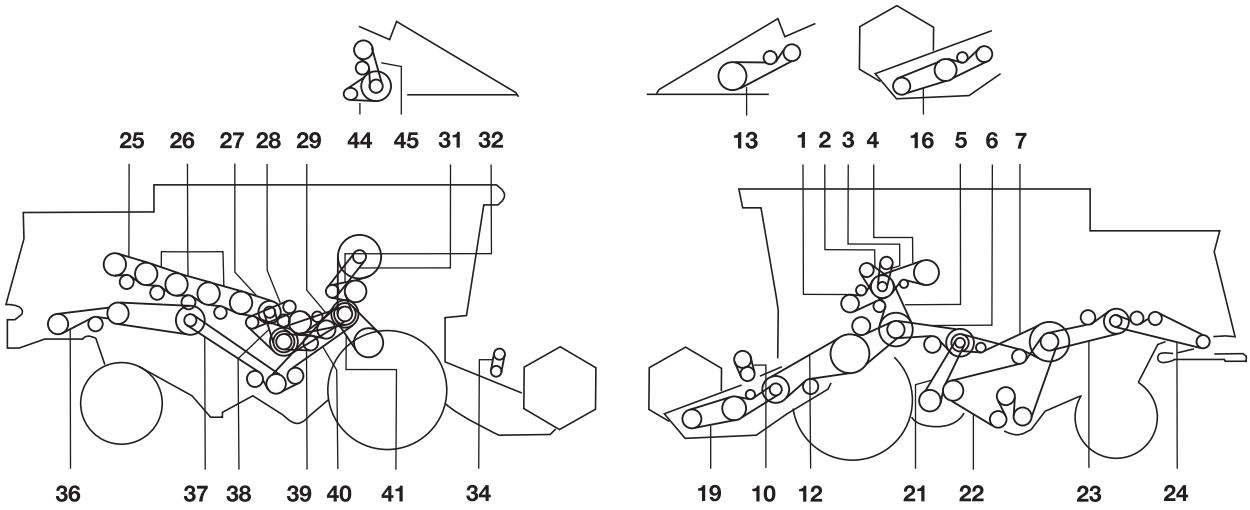

			OE	
1	TRAVEL DRIVE (TO NR. 15900370)	1	644017.1	1426173
1	TRAVEL DRIVE (FROM NR. 15900371)	1	661092.2	1426196
2	HYDRAULIC PUMP DRIVE (TO NR. 15900370)	1	629002.1	1601103
2	HYDRAULIC PUMP DRIVE (FROM NR. 15900371)	1	633030.2	0201108
3	AIR CONDITIONING COMPRESSOR DRIVE	1	629908.1	1443160
4	TANK UNLOADING (FROM NR. 15900371)	1	661093.1	1423202
4	TANK UNLOADING (TO NR. 15900370)	1	629763.0	1423210
5	THRESHING CYLINDER (TO NR. 15900370)	1	644018.1	1426230
5	THRESHING MACHINE (FROM NR. 15900371)	1	644403.0	1426260
6	COUNTERSHAFT - FAN DRIVE	1	603337.0	0202222
7	SHAKER SHOE DRIVE (FROM NR. 15900371)	1	644141.1	1429343
7	SHAKER SHOE DRIVE (TO NR. 15900370)	1	603336.1	1429345
10	REEL DRIVE BY 5.1 M CUTTING TABLE	1	670224.1	1462186
12	CONVEYOR SHAFT 1463 MM	2	603017.3	1402436
12	CONVEYOR SHAFT 1306 MM (TO NR. 15900460)	1	603430.1	1402412
12	CONVEYOR SHAFT 1306 MM (FROM NR. 15900461)	1	644419.1	0302428
13	FOR MAIZE PICKER	1	692149.0	1424269 EE-TECH
13	FOR MAIZE PICKER HINGED	1	692150.0	1424276
13	CUTTING TABLE DRIVE (MAIZE)	1	629142.0	1425218
16	CUTTING MECHANICAL FROM 6.0 M CUTTING TABLE	1	671013.1	0202230
19	CUTTING MECHANICAL BY 5.1 M CUTTING TABLE	1	713506.2	0101200
21	FAN DRIVE VARIABLE SPEED	1	603380.1	1410210
22	SHAKER SHOE DRIVE	1	609762.0	0323472
23	FOR STRAW DISTRIBUTOR	1	506671.2	1454323
23	DISTRIBUTOR GRAIN	1	713506.2	0101200
24	STRAW DISTRIBUTOR	1	640653.1	1901251
25	SEPARATOR CYLINDER 8.	1	644014.1	1902144
26	SEPARATOR CYLINDER 3. 5. 6. AND 7	1	644015.1	1423179
27	SEPARATOR CYLINDER 4.	1	644016.1	1424181
28	COUNTERSHAFT - VARIATOR DRIVE	1	064168.2	1424251

COMMANDOR 116 - 228 (CONTINUED)

			OE	
31	ROTARY SIEVE DRIVE (TO NR. 15900370)	1	644267.0	1401134
32	ROTARY SIEVE DRIVE (TO NR. 15900150)	1	633030.2	0201108
32	ROTARY SIEVE COUNTERSHAFT NR. 15900151-15900370	1	233839.2	0201112
34	REEL DRIVE FROM 6.0 M CUTTING TABLE	1	670224.1	1462186
36	STRAW CHOPPER (MAIZE)	2	061872.0	1402336
36	STRAW CHOPPER (GRAIN)	1	061701.2	1402358
37	COUNTERSHAFT (2ND STAGE) - STRAW CHOPPER	1	061700.1	1423319
38	COUNTERSHAFT - STRAW STRIPPER DRUM	1	603247.1	1424183
39	COUNTERSHAFT (PRIMARY) - STRAW CHOPPER	1	061700.1	1423319
40	1. AND 2. SEPARATOR CYLINDER	1	644014.1	1902144
41	CYLINDER N=650-1500 RPM (TO NR. 15900310)	1	628630.0	1479291
41	THRESHING CYLINDER RPM 650-1500 FROM 15900311	1	644418.1	1479291
41	THRESHING CYLINDER WITH TWO-STAGE DRIVE	1	644418.1	1479291
41	CYLINDER N=500-1400 RPM	1	644177.0	1414168
45		1	680334.1	1424212
46	ROTARY SIEVE (FROM NR. 15900371)	1	661345.0	1400216
47	ROTARY SIEVE COUNTERSHAFT (FROM NR. 15900371)	1	661245.0	2600124
48	DISTRIBUTOR - N=531 RPM (FROM NR. 70910057)	1	501925.0	0201215
48	DISTRIBUTOR - N=531 RPM (TO NR. 70910056)	1	802931.0	1401241
49	DISTRIBUTOR - N=676 RPM (FROM NR. 70910057)	1	687046.1	0301211
49	DISTRIBUTOR - N=676 RPM (TO NR. 70910056)	1	750288.1	1401234
50	ALTERNATOR DRIVE (TO NR. 15900370)	1	133528.0	1472236
50	ALTERNATOR DRIVE (FROM NR. 15900371)	1	133640.0	0372258
51	WATERPUMP DRIVE (FROM NR. 15900370)	1	133630.1	0372234
52	COOLING DUST CLEANER	1	664448.0	1200149

COMMANDOR 116 CS

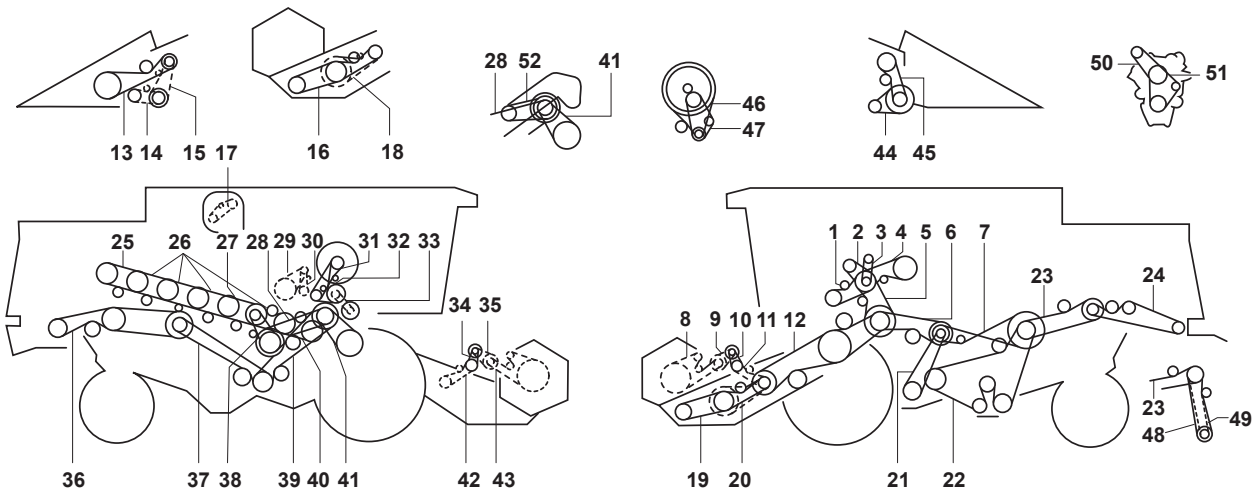

			OE	
1	GROUND DRIVE FROM NO. 15900371	1	661092.2	1426196
1	TO NO. 15900370	1	644017.1	1426173
2	HYDRAULIC PUMP FROM NO. 15900371	1	633030.2	0201108
2	TO NO. 15900370	1	629002.1	1601103
3	AIR CONDITIONER	1	629908.1	1443160
4	GRAIN TANK UNLOADING FROM NO. 15900371	1	661093.1	1423202
4	TO NO. 15900370	1	629763.0	1423210
5	INTERMEDIATE DRIVE THRESHING MECHANISM FROM NO. 15900371	1	644403.0	1426260
5	TO NO. 15900370	1	644018.1	1426230
6	BLOWER INTERMEDIATE DRIVE	1	603337.0	0202222
7	SIEVE PAN INTERMEDIATE DRIVE FROM NO. 15900371	1	644141.1	1429343
7	TO NO. 15900370	1	603336.1	1429345
8	AT 5.1 M CUTTERBAR	1	650193.0	Chain
9	AT 5.1 M CUTTERBAR	1	670229.2	Chain
10	AT 5.1 M CUTTERBAR	1	670224.1	1462186
11	AT 5.1 M CUTTERBAR	1	650191.2	Chain
12	SHAFTS DISTANCE 1306 MM FROM NO. 15900461	2	644419.1	0302428
12	SHAFTS DISTANCE 1306 MM TO NO. 15900460	2	603430.1	1402412
12	SHAFTS DISTANCE 1463 MM	2	603017.3	1402436
13	FOR CORN PICKER	1	692149.0	1424269 EE-TECH
13	FOR CORN PICKER	1	692150.0	1424276
13	CORN PICKER FOLDING	1	629142.0	1425218
14	FOR CORN PICKER	1	692166.0	Chain
15	FOR CORN PICKER	1	503445.0	Chain
16	FROM 6.0 M CUTTERBAR	1	671013.1	0202230
17	GRAIN ELEVATOR FROM NO. 15900231	1	646128.0	Chain
17	TO NO. 15900230	1	646011.0	Chain
18	FROM 6.0 M CUTTERBAR AT N = 175 MIN-1	1	676277.0	Chain
18	AT N = 144 MIN-1	1	176933.0	Chain
19	AT 5.1 M CUTTERBAR	1	713506.2	0101200
20	AT 5.1 M CUTTERBAR	1	650174.0	Chain

COMMANDOR 116 CS (CONTINUED)

			OE	
21	FAN	1	603380.1	1410210
22	SIEVE BOX	1	609762.0	0323472
23	FOR STRAW SPREADER	1	506671.2	1454323
23	FOR CHAFF SPREADER	1	713506.2	0101200
24	FOR STRAW SPREADER	1	640653.1	1901251
25	8. SEPARATOR DRUM	1	644014.1	1902144
26	3.5, 6.7. SEPARATOR DRUM	4	644015.1	1423179
27	4TH SEPARATOR DRUM	1	644016.1	1424181
28	INTERMEDIATE DRIVE VARIABLE SPEED DRIVE	1	064168.2	1424251
29	GRAIN TANK UNLOADING FROM NO. 15900371	1	661909.0	Chain
29	TO NO. 15900371	1	818101.0	Chain
30	LATERAL AUGER DRIVE FROM NO. 15900371	1	661911.1	Chain
30	NO. 15900271 - 15900370	1	642492.0	Chain
30	TO NO. 15900270	1	646660.0	Chain
31	ROTOR DRIVE TO NO. 15900370	1	644267.0	1401134
32	ROTOR INTERMEDIATE DRIVE NO 15900151 - 15900370	1	233839.2	0201112
32	TO NO. 15900150	1	633030.2	0201108
33	RETURNS	1	600981.0	Chain
34	FROM 6.0 M CUTTERBAR	1	670224.1	1462186
35	FROM 6.0 M CUTTERBAR	2	670229.2	Chain
36	CHOPPER, GRAIN	1	061701.2	1402358
36	CHOPPER, CORN	2	061872.0	1402336
37	INTERMEDIATE DRIVE II CHOPPER	1	061700.1	1423319
38	INTERMEDIATE DRIVE SEPARATOR DRUM	1	603247.1	1424183
39	INTERMEDIATE DRIVE I CHOPPER	1	061700.1	1423319
40	1STE AND 2ND SEPARATOR DRUM	1	644014.1	1902144
41	AT N = 650 - 1500 MIN-1 FROM NO. 15900581	1	661429.0	1499328
41	AT N = 650 - 1500 MIN-1 NO. 15900311 - 15900580	1	644418.1	1479291
41	TO NO. 15900310	1	628630.0	1479291
41	AT N = 500 - 1500 MIN-1	1	661430.0	1414168
41	AT HIGH - LOW SPEED RANGE TRANSMISSION FROM NO. 15900581	1	661429.0	1499328
41	AT DRUM CHAIN DRIVE	1	644418.1	1479291
41	AT DRUM CHAIN DRIVE	1	603132.1	Chain
41	AT DRUM CHAIN DRIVE	1	609790.0	Chain
41	FROM 6.0 M CUTTERBAR	1	603131.0	Chain
42	AT 6.0 M - 6.6 M	2	670229.2	Chain
43	AT 7.5 M - 9.0 M	1	648166.0	Chain
43	FOR HPH - G CHOPPER	1	645483.1	Chain
44	FOR HPH - G CHOPPER	1	695610.1	1499313
45	ROTOR DRIVE FROM NO. 15900371	1	680334.1	1424212
46	ROTOR INTERMEDIATE DRIVE FROM NO. 15900371	1	661345.0	1400216
47	ROTOR INTERMEDIATE DRIVE FROM NO. 15900371	1	661245.0	2600124
48	FOR CHAFF SPREADER FROM NO. 70910057 AT 531 MIN-1	1	501925.0	0201215
48	FOR CHAFF SPREADER TO NO. 70910056 AT 531 MIN-1	1	802931.0	1401241
49	FOR CHAFF SPREADER FROM NO. 70910057 AT 676 MIN-1	1	687046.1	0301211
49	FOR CHAFF SPREADER TO NO. 70910056 AT 676 MIN-1	1	750288.1	1401234
50	FOR ALTERNATOR FROM NO. 15900371	1	133640.0	0372258
50	TO NO. 15900370	1	133528.0	1472236
51	FOR WATERPUMP TO NO. 15900370	1	133630.1	0372234
52	RADIATOR CONCAVE SUCTION FROM NO. 15900371	1	644448.1	1200149

COMMANDOR 228 CS

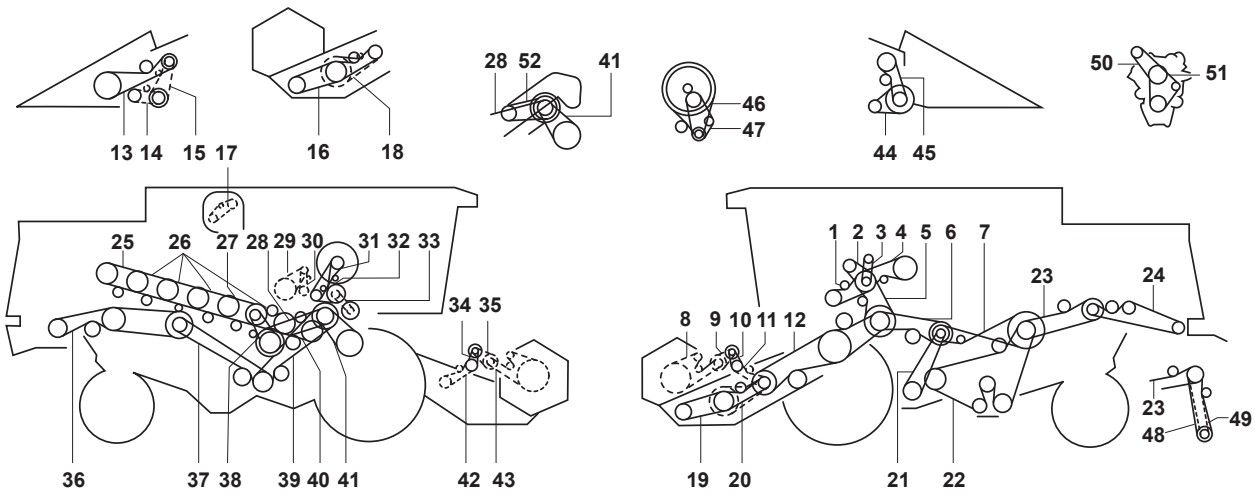

			OE	
1	GROUND DRIVE FROM NO. 15900371	1	661092.2	1426196
1	TO NO. 15900370	1	644017.1	1426173
2	HYDRAULIC PUMP FROM NO. 15900371	1	633030.2	0201108
2	TO NO. 15900370	1	629002.1	1601103
3	AIR CONDITIONER	1	629908.1	1443160
4	GRAIN TANK UNLOADING FROM NO. 15900371	1	661093.1	1423202
4	TO NO. 15900370	1	629763.0	1423210
5	INTERMEDIATE DRIVE THRESHING MECHANISM FROM NO. 15900371	1	644403.0	1426260
5	TO NO. 15900370	1	644018.1	1426230
6	BLOWER INTERMEDIATE DRIVE	1	603337.0	0202222
7	SIEVE PAN INTERMEDIATE DRIVE FROM NO. 15900371	1	644141.1	1429343
7	TO NO. 15900370	1	603336.1	1429345
8	AT 5.1 M CUTTERBAR	1	650193.0	Chain
9	AT 5.1 M CUTTERBAR	1	670229.2	Chain
10	AT 5.1 M CUTTERBAR	1	670224.1	1462186
11	AT 5.1 M CUTTERBAR	1	650191.2	Chain
12	SHAFTS DISTANCE 1306 MM FROM NO. 15900461	2	644419.1	0302428
12	SHAFTS DISTANCE 1306 MM TO NO. 15900460	2	603430.1	1402412
12	SHAFTS DISTANCE 1463 MM	2	603017.3	1402436
13	FOR CORN PICKER	1	692149.0	1424269 EE-TECH
13	FOR CORN PICKER	1	692150.0	1424276
13	CORN PICKER FOLDING	1	629142.0	1425218
14	FOR CORN PICKER	1	692166.0	Chain
15	FOR CORN PICKER	1	503445.0	Chain
16	FROM 6.0 M CUTTERBAR	1	671013.1	0202230
17	GRAIN ELEVATOR FROM NO. 15900231	1	646128.0	Chain
17	TO NO. 15900230	1	646011.0	Chain
18	FROM 6.0 M CUTTERBAR AT N = 175 MIN-1	1	676277.0	Chain
18	AT N = 144 MIN-1	1	176933.0	Chain
19	AT 5.1 M CUTTERBAR	1	713506.2	0101200
20	AT 5.1 M CUTTERBAR	1	650174.0	Chain

COMMANDOR 228 CS (CONTINUED)

			OE	
21	FAN	1	603380.1	1410210
22	SIEVE BOX	1	609762.0	0323472
23	FOR STRAW SPREADER	1	506671.2	1454323
23	FOR CHAFF SPREADER	1	713506.2	0101200
24	FOR STRAW SPREADER	1	640653.1	1901251
25	8. SEPARATOR DRUM	1	644014.1	1902144
26	3.5, 6.7. SEPARATOR DRUM	4	644015.1	1423179
27	4TH SEPARATOR DRUM	1	644016.1	1424181
28	INTERMEDIATE DRIVE VARIABLE SPEED DRIVE	1	064168.2	1424251
29	GRAIN TANK UNLOADING FROM NO. 15900371	1	661909.0	Chain
29	TO NO. 15900371	1	818101.0	Chain
30	LATERAL AUGER DRIVE FROM NO. 15900371	1	661911.1	Chain
30	NO. 15900271 - 15900370	1	642492.0	Chain
30	TO NO. 15900270	1	646660.0	Chain
31	ROTOR DRIVE TO NO. 15900370	1	644267.0	1401134
32	ROTOR INTERMEDIATE DRIVE NO 15900151 - 15900370	1	233839.2	0201112
32	TO NO. 15900150	1	633030.2	0201108
33	RETURNS	1	600981.0	Chain
34	FROM 6.0 M CUTTERBAR	1	670224.1	1462186
35	FROM 6.0 M CUTTERBAR	2	670229.2	Chain
36	CHOPPER, GRAIN	1	061701.2	1402358
36	CHOPPER, CORN	2	061872.0	1402336
37	INTERMEDIATE DRIVE II CHOPPER	1	061700.1	1423319
38	INTERMEDIATE DRIVE SEPARATOR DRUM	1	603247.1	1424183
39	INTERMEDIATE DRIVE I CHOPPER	1	061700.1	1423319
40	1STE AND 2ND SEPARATOR DRUM	1	644014.1	1902144
41	AT N = 650 - 1500 MIN-1 FROM NO. 15900581	1	661429.0	1499328
41	AT N = 650 - 1500 MIN-1 NO. 15900311 - 15900580	1	644418.1	1479291
41	TO NO. 15900310	1	628630.0	1479291
41	AT N = 500 - 1500 MIN-1	1	661430.0	1414168
41	AT HIGH - LOW SPEED RANGE TRANSMISSION FROM NO. 15900581	1	661429.0	1499328
41	AT DRUM CHAIN DRIVE	1	644418.1	1479291
41	AT DRUM CHAIN DRIVE	1	603132.1	Chain
41	AT DRUM CHAIN DRIVE	1	609790.0	Chain
41	FROM 6.0 M CUTTERBAR	1	603131.0	Chain
42	AT 6.0 M - 6.6 M	2	670229.2	Chain
43	AT 7.5 M - 9.0 M	1	648166.0	Chain
43	FOR HPH - G CHOPPER	1	645483.1	Chain
44	FOR HPH - G CHOPPER	1	695610.1	1499313
45	ROTOR DRIVE FROM NO. 15900371	1	680334.1	1424212
46	ROTOR INTERMEDIATE DRIVE FROM NO. 15900371	1	661345.0	1400216
47	ROTOR INTERMEDIATE DRIVE FROM NO. 15900371	1	661245.0	2600124
48	FOR CHAFF SPREADER FROM NO. 70910057 AT 531 MIN-1	1	501925.0	0201215
48	FOR CHAFF SPREADER TO NO. 70910056 AT 531 MIN-1	1	802931.0	1401241
49	FOR CHAFF SPREADER FROM NO. 70910057 AT 676 MIN-1	1	687046.1	0301211
49	FOR CHAFF SPREADER TO NO. 70910056 AT 676 MIN-1	1	750288.1	1401234
50	FOR ALTERNATOR FROM NO. 15900371	1	133640.0	0372258
50	TO NO. 15900370	1	133528.0	1472236
51	FOR WATERPUMP TO NO. 15900370	1	133630.1	0372234
52	RADIATOR CONCAVE SUCTION FROM NO. 15900371	1	644448.1	1200149

CONSUL

			OE	
1	CUTTING TABLE DRIVE	1	702509.0	1403228
2	CYLINDER DRIVE	1	702536.0	1613159
2	DRUM DRIVE VARIABLE SPEED	1	/	/
3	REEL DRIVE VARIABLE SPEED	1	778561.1	1459199
4	KNIFE DRIVE	1	778717.1	1401209
5	SHAKER SHOE DRIVE	2	610830.1	0501273
6	TRACTION VARIATOR DRIVE	1	702536.0	1613159
7	COUNTERSHAFT DRIVE	1	703314.0	0301183
7	SHAKER SHOE DRIVE	1	/	/
8	UNLOADING GRAIN TANK	1	706087.0	0401279
9	STRAW SPREADER DRIVE	1	706829.0	/
10	HYDRAULIC PUMP DRIVE	1	713506.2	0101200
11	TRACTION DRIVE	1	720695.0	0202285
12	TURNING DRUM DRIVE	1	720696.1	1429283
12	TURNING DRUM DRIVE	1	720866.0	1423274
13	RADIATOR FAN DRIVE	1	721306.0	1482289
13	RADIATOR FAN DRIVE	1	721307.0	1482291
14	STRAW WALKER DRIVE	1	774099.0	1454371
15	FAN MILL VARIABLE SPEED	1	778561.1	1459199

DOMINATOR 38

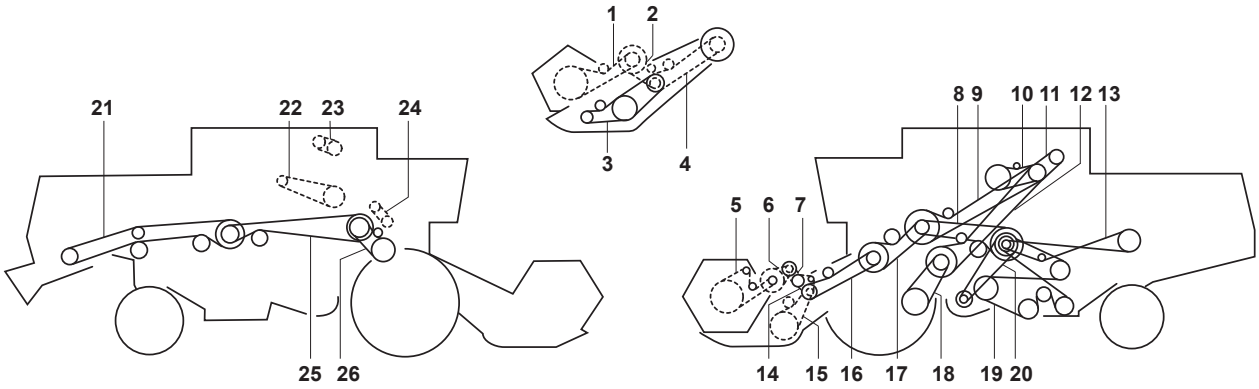

			OE	
1	TO NO. 15200469	1	787631.0	Chain
2	TO NO. 15200469	1	787607.1	☎
3	TO NO. 15200469	1	785341.0	1401180
4	TO NO. 15200469	1	727237.0	☎
5	FROM CUTTERBAR 247185	1	677875.0	Chain
6	FROM CUTTERBAR 247185	1	670228.0	Chain
6	FROM CUTTERBAR 247185	1	670224.1	1462186
8	FANNING MILL	1	724141.0	0102257
9	FOR THRESHING MECHANISM	1	724101.0	1423396 EE-TECH
10		1	724179.0	1401145
11	HYDRAULIC PUMP	1	767057.1	0101099
12	FOR GROUND DRIVE	1	724180.0	1423389 EE-TECH
13	STRAW WALKER	1	785176.0	1401314
14	FROM CUTTERBAR 247185	1	728007.1	Chain
15	FROM CUTTERBAR 247185	1	651072.1	Chain
16	FROM CUTTERBAR 247185	1	724301.1	0702212
17	FROM NO. 15200690	1	724339.0	1402293
17	TO NO. 15200689	1	724168.0	1602195
18	FROM NO. 15201320	1	671083.0	1413193
18	TO NO. 15201319	1	629756.0	1413195
19		1	724248.1	1402474
20		1	603380.1	1410210
21		1	061878.0	1402412
22		1	725325.0	Chain
23		1	686200.0	Chain
24		1	600981.0	Chain
25	STRAW CHOPPER	2	061872.0	1402336
26		1	603247.1	1424183

DOMINATOR 48

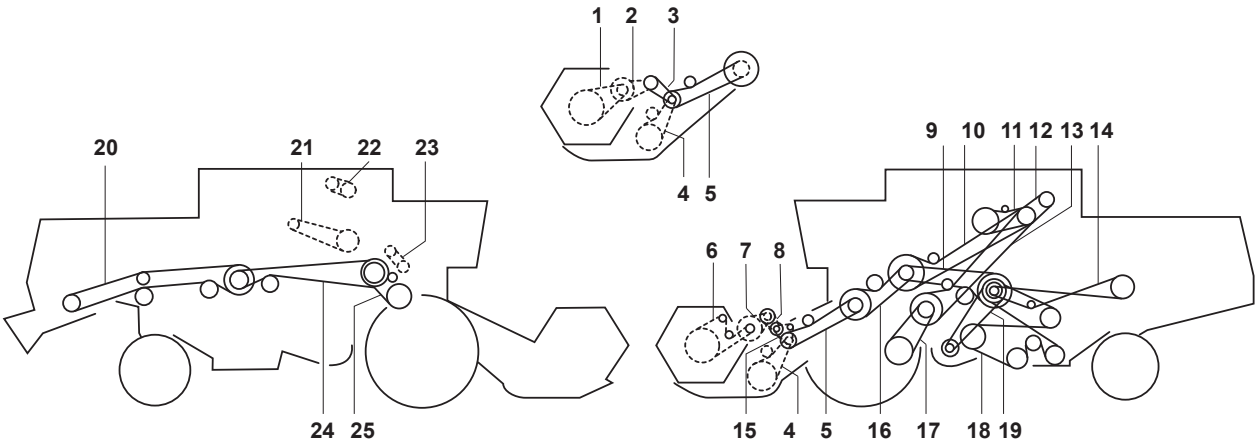

			OE	
3		1	778561.1	1459199
5		1	724301.1	0702212
8		1	670224.1	1462186
9		1	724141.0	0102257
10		1	724101.0	1423396 EE-TECH
11		1	673614.1	1423188
12		1	767057.1	0101099
13		1	724180.0	1423389 EE-TECH
14		1	785176.0	1401314
16		1	724168.0	1602195
17		1	629756.0	1413195
18		1	724248.1	1402474
19		1	603380.1	1410210
24		2	061872.0	1402336
25		1	603247.1	1424183
25		1	603015.1	1413166

DOMINATOR 48 SP

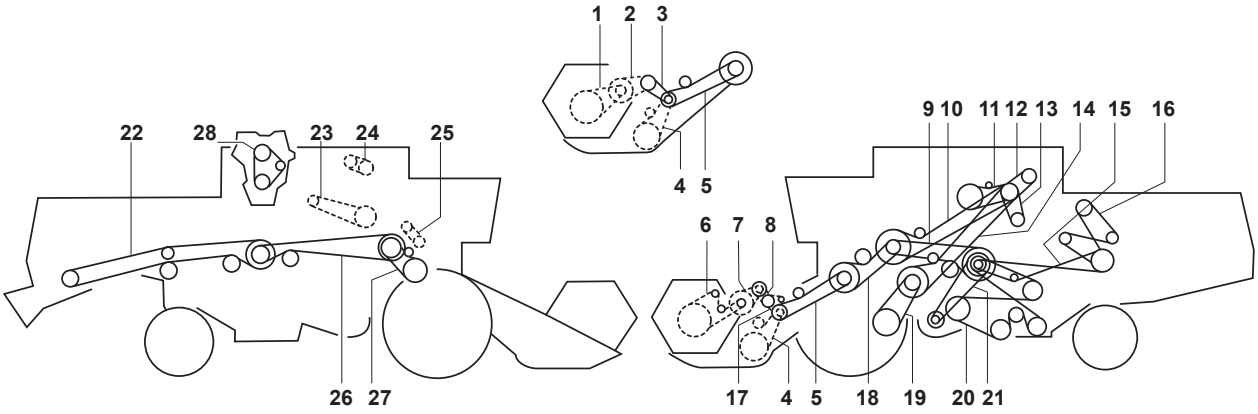

			OE	
1	TO CUTTERBAR 247184	1	778564.0	Chain
2	TO CUTTERBAR 247184	1	778562.0	Chain
3	TO CUTTERBAR 247184	1	778561.1	1459199
4		1	651072.1	Chain
5		1	724301.1	0702212
6	FROM CUTTERBAR 247185	1	677875.0	Chain
7	FROM CUTTERBAR 247185	1	670228.0	Chain
8	FROM CUTTERBAR 247185	1	670224.1	1462186
9	FANNING MILL	1	724141.0	0102257
10	FOR THRESHING MECHANISM	1	724100.0	1424398 EE-TECH
11		1	673614.1	1423188
12	HYDRAULIC PUMP	1	767057.1	0101099
13	FROM CUTTERBAR 247185	1	783268.1	0372234
14	FROM NO. 15400642	1	724180.0	1423389 EE-TECH
15	TO NO. 15400641	1	785176.0	1401314
16		1	802931.0	1401241
17		1	728007.1	Chain
18		1	724339.0	1402293
18		1	724168.0	1602195
19		1	629756.0	1413195
20		1	724247.1	1402474
21		1	603380.1	1410210
22		1	061902.0	1402479
23		1	725325.0	Chain
24		1	686200.0	Chain
25		1	600981.0	Chain
26	STRAW CHOPPER	2	061872.0	1402336
27	AT N = 650 - 1500 MIN-1 FROM NO. 15400932	1	661429.0	1499328
27	AT N = 650 - 1500 MIN-1 TO NO 15400931	1	603015.1	1413166
27	AT N = 500 - 1400 MIN-1	1	661430.0	1414168
28	PERKINS 4.236 / 4.248	1	147227.0	0372232
28	PERKINS 6.3544	2	147228.1	1600100
28	PERKINS 1006.6	1	147233.1	0372244

DOMINATOR 56 - 66

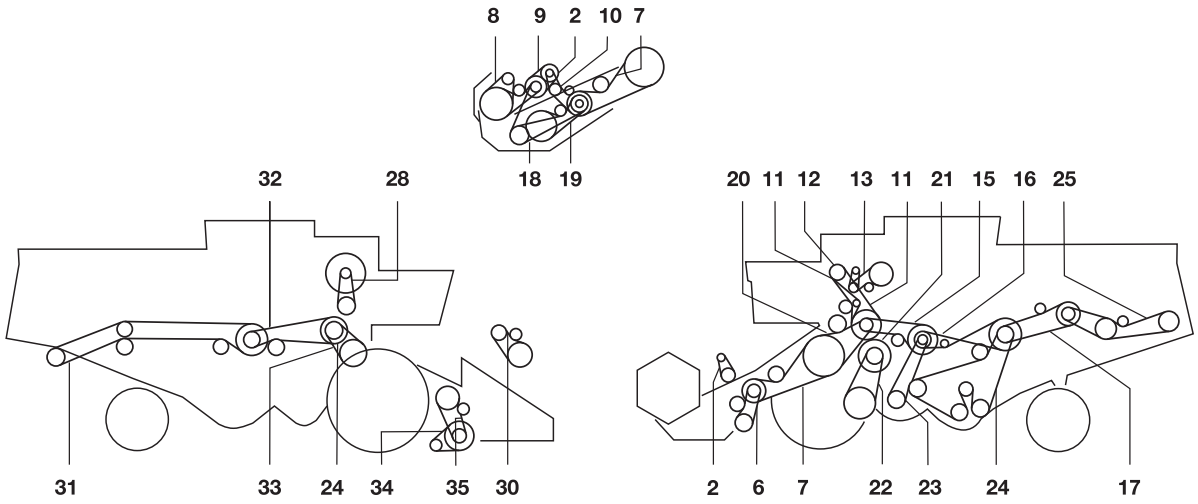

			OE	
2	REEL DRIVE VARIABLE SPEED	1	670224.1	1462186
6	KNIFE DRIVE	1	629214.1	1477269
7		1	629081.1	1402307
7		1	603122.0	1403325
8		1	603284.0	2354342
9		1	056961.0	1900106
10		1	056961.0	1900106
11	HYDRAULIC PUMP DRIVE	1	767057.1	0101099
12		1	621903.1	1443151
13	DISCHARGE AUGER SHAFT	1	673614.1	1423188
14	TRACTION DRIVE	1	671012.2	1424226 EE-TECH
15		1	603337.0	0202222
15		1	672358.0	0302220
16	SIEVE DRIVE	1	672359.1	1429345
16		1	603336.1	1429345
17		1	506671.2	1454323
18		1	603283.0	0302220
19		1	603048.0	1454282
20		1	673638.1	1403239
21		1	629436.0	1423274
22		1	629737.0	1413193
23		1	671209.0	1459293
24		2	603017.3	1402436
25		1	635494.1	1401304
28		1	783430.1	1401129
30		1	603247.1	1424183
31		1	061361.0	1402547
32	WHEEL SHAFT (FRONT)	1	060306.4	0702274
33		1	603015.1	1413166
34		1	629410.1	1402129
35		1	680334.1	1424212

DOMINATOR 58

			OE	
1	PICK UP REEL	1	778561.1	1459199
2	CUTTERBAR DRIVE	1	724301.1	0702212
3	FANNING MILL	1	724141.0	0102257
4	THRESHING DRIVE MECH.	1	724100.0	1424398 EE-TECH
5	GRAIN TANK UNLOADER DRIVE	1	673614.1	1423188
6	HYDRAULIC PUMP DRIVE	1	767057.1	0101099
7	COMPRESSOR DRIVE	2	783268.1	0372234
8	FAN DRIVE	1	724180.0	1423389 EE-TECH
8	FAN DRIVE	1	724181.0	1423389 EE-TECH
9	STRAW WALKER DRIVE	1	785176.0	1401314
10	AIR INTAKE	1	802931.0	1401241
11	FEEDER DRIVE	1	724339.0	1402293
11	FEEDER DRIVE	1	724168.0	1602195
12	TRACTION DRIVE	1	629756.0	1413195
13	IMPELLOR DRIVE	1	724247.1	1402474
14	CLEANING FAN	1	603380.1	1410210
15	CHOPPER DRIVE	1	061902.0	1402479
16	FINAL CHOPPER DRIVE	2	061872.0	1402336
17	VARIATOR DRUM DRIVE	1	603015.1	1413166
17	VARIATOR DRUM DRIVE	1	628630.0	1479291

DOMINATOR 58 SP

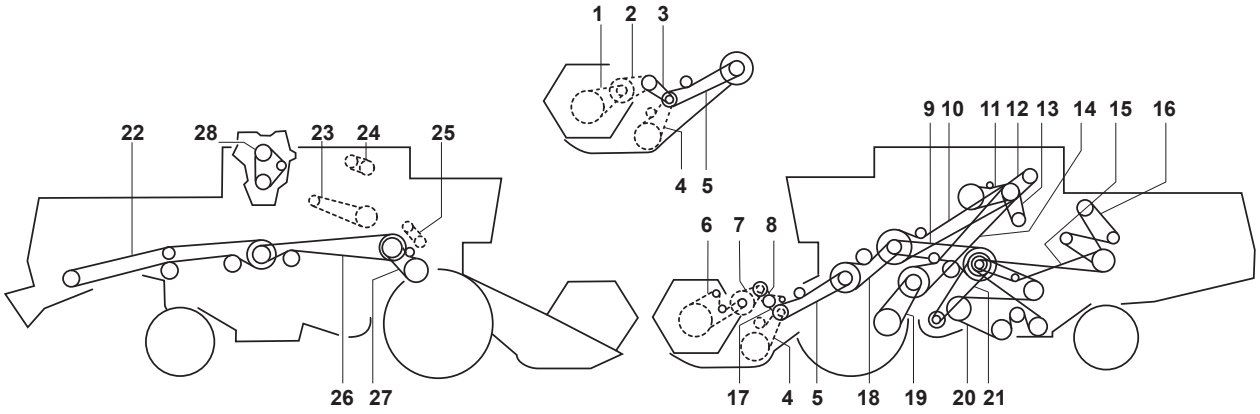

			OE	
1	TO CUTTERBAR 247184	1	778564.0	Chain
2	TO CUTTERBAR 247184	1	778562.0	Chain
3	TO CUTTERBAR 247184	1	778561.1	1459199
4		1	651072.1	Chain
5		1	724301.1	0702212
6	FROM CUTTERBAR 247185	1	677875.0	Chain
7	FROM CUTTERBAR 247185	1	670228.0	Chain
8	FROM CUTTERBAR 247185	1	670224.1	1462186
9	FANNING MILL	1	724141.0	0102257
10	FOR THRESHING MECHANISM	1	724100.0	1424398 EE-TECH
11		1	673614.1	1423188
12	HYDRAULIC PUMP	1	767057.1	0101099
13	FROM CUTTERBAR 247185	1	783268.1	0372234
14	FROM NO. 15400642	1	724180.0	1423389 EE-TECH
15	TO NO. 15400641	1	785176.0	1401314
16		1	802931.0	1401241
17		1	728007.1	Chain
18		1	724339.0	1402293
18		1	724168.0	1602195
19		1	629756.0	1413195
20		1	724247.1	1402474
21		1	603380.1	1410210
22		1	061902.0	1402479
23		1	725325.0	Chain
24		1	686200.0	Chain
25		1	600981.0	Chain
26	STRAW CHOPPER	2	061872.0	1402336
27	AT N = 650 - 1500 MIN-1 FROM NO. 15400932	1	661429.0	1499328
27	AT N = 650 - 1500 MIN-1 TO N0 15400931	1	603015.1	1413166
27	AT N = 500 - 1400 MIN-1	1	661430.0	1414168
28	PERKINS 4.236 / 4.248	1	147227.0	0372232
28	PERKINS 6.3544	2	147228.1	1600100
28	PERKINS 1006.6	1	147233.1	0372244

DOMINATOR 68

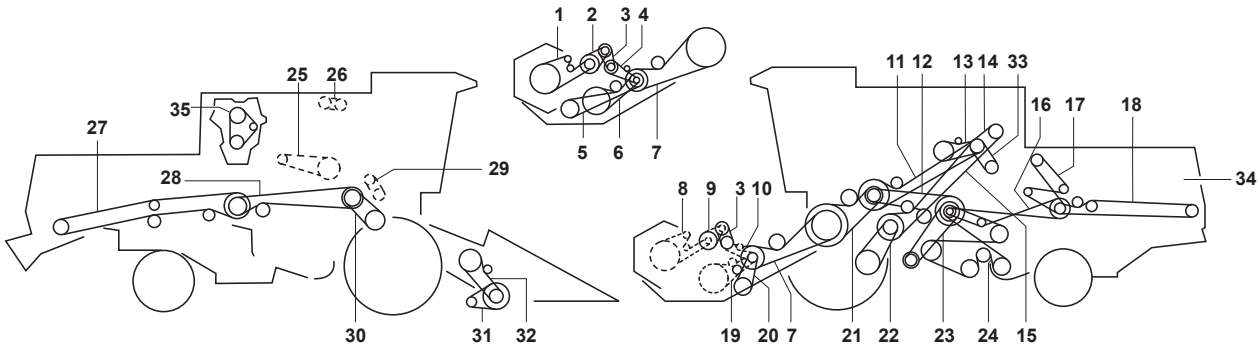

			OE	
1	CUTTING MECHANICAL BY 3.0 M	1	603284.0	2354342
2	CUTTING MECHANICAL BY 3.0 M	1	056961.0	1900106
3		1	670224.1	1462186
4	CUTTING MECHANICAL BY 3.0 M	1	056961.0	1900106
5	FOR 3.6 M - 5.1 M TO CUTTING MECHANICAL 255807	1	713506.2	0101200
5	CUTTING MECHANICAL BY 3.6 M TO 5.1 M TO 25580	1	713506.2	0101200
5	TO CUTTING MECHANICAL BY 3.0 TO CUT. 255807	2	778717.1	1401209
5	CUTTING MECHANICAL BY 3.0 M TO CUT. 255806	1	603283.0	0302220
6	CUTTING MECHANICAL BY 3.0 M	1	603048.0	1454282
7	2X BY MAIZE PICKET (TO NR. 15606082)	2	629836.1	0302302
7	2X BY MAIZE PICKET (TO NR. 15606083)	1	603290.0	1402317
11		1	724100.0	1424398 EE-TECH
12		1	724141.0	0102257
13		1	673614.1	1423188
14		1	767057.1	0101099
15		1	724181.0	1423389 EE-TECH
16		1	785176.0	1401314
17		1	802931.0	1401241
18	FOR STRAW DISTRIBUTOR	1	509435.0	0201343
20	CUTTING MECHANICAL TO 3.6 M	1	629214.1	1477269
21		1	673638.1	1403239
22		1	629756.0	1413195
23		1	603380.1	1410210
24		1	724247.1	1402474
27	FOR GRAIN	1	061902.0	1402479
27	FOR MAIZE	1	062043.0	0102464
28		2	061872.0	1402336
30	FOR N=650-1500 RPM (TO NR. 15603257)	1	628630.0	1479291
30	FOR N=650-1550 RPM (TO NR. 15603256)	1	603015.1	1413166
30	FOR N=500-1400 RPM	1	644177.0	1414168
31		1	629410.1	1402129
32		1	680334.1	1424212
33	AIR CONDITIONING COMPRESSOR DRIVE	1	783268.1	0372234

DOMINATOR 68 R

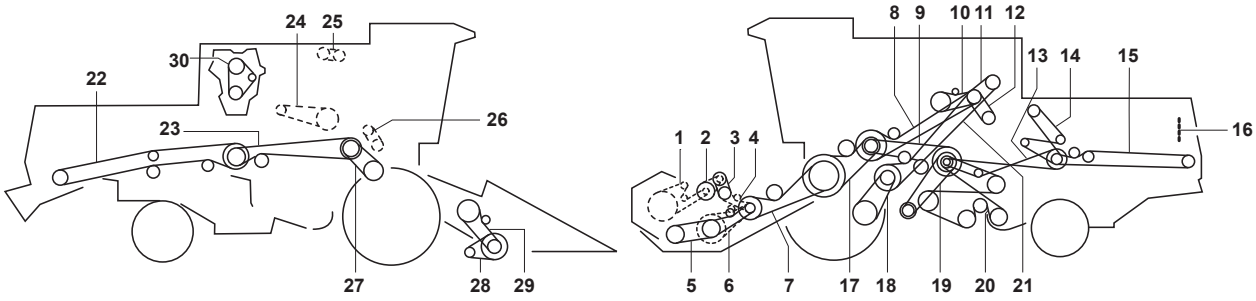

			OE	
1	REEL	1	650193.0	Chain
2		1	670229.2	Chain
3	REEK VARIATOR	1	670224.1	1462186
4		1	650191.2	Chain
5	KNIFE DRIVE	1	713506.2	0101200
6	ROLLER	1	650174.0	Chain
7	FROM NO. 15500594 (2X FOR CORN)	1	603290.0	1402317
7	FEEDER DRIVE TO NO. 15500593 (2X FORN CORN)	2	629836.1	0302302
7	FEEDER HOUSING LONG	2	061872.0	1402336
8		1	724100.0	1424398 EE-TECH
9	FANNING MILL	1	724141.0	0102257
10	GRAIN TANK UNLOADING	1	673614.1	1423188
11	HYDRAULIC PUMP	1	767057.1	0101099
12	AIR CONDITIONER	1	783268.1	0372234
13		1	785176.0	1401314
14	FEED RAKE DRIVE	1	802931.0	1401241
15	STRAW SPREADER	1	509435.0	0201343
16	OUTLET PIPE	1	605490.1	Chain
17	CUTTERBAR DRIVE	1	673638.1	1403239
18	DRIVE - VARIATOR	1	629756.0	1413195
19	BLOWER - VARIATOR	1	603380.1	1410210
20	SIEVE PAN DRIVE	1	724247.1	1402474
21	GROUND DRIVE	1	724181.0	1423389 EE-TECH
22	AT GRAIN	1	061902.0	1402479
22	AT CORN	1	062043.0	0102464
23	STRAW CHOPPER	2	061872.0	1402336
24	GRAIN TANK UNLOADING	1	725325.0	Chain
25	GRAIN ELEVATOR	1	686200.0	Chain
26	RETURNS ELEVATOR	1	600981.0	Chain
27	AT N = 650 - 1550 MIN-1	1	603015.1	1413166
27	AT N = 500 - 1400 MIN-1	1	644177.0	1414168
27	AT N = 650 - 1500 MIN-1	1	628630.0	1479291
27	DRUM CHAIN DRIVE	1	603132.1	Chain
28	FOR HPH - CHOPPER	1	629410.1	1402129
29	FOR HPH - CHOPPER	1	680334.1	1424212
30	PERKINS 6.3544	2	147228.1	1600100
30	PERKINS 1006.6	1	147233.1	0372244
30	MERCEDES OM 352	1	133523.0	0422134

DOMINATOR 68 SR

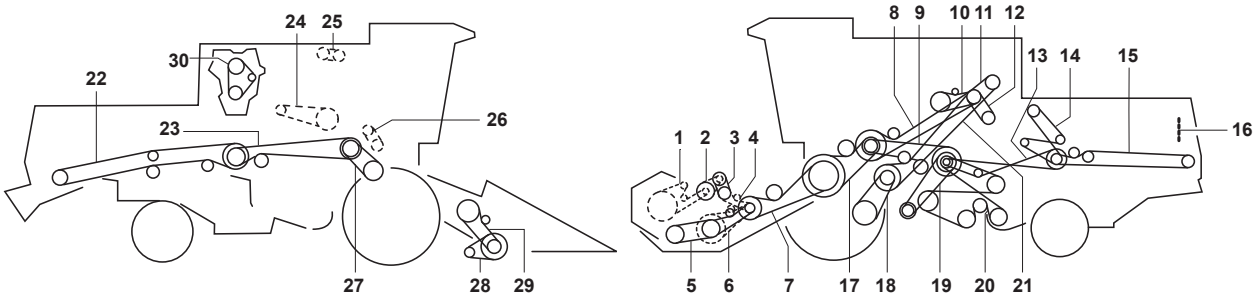

			OE	
1	REEL	1	650193.0	Chain
2		1	670229.2	Chain
3	REEK VARIATOR	1	670224.1	1462186
4		1	650191.2	Chain
5	KNIFE DRIVE	1	713506.2	0101200
6	ROLLER	1	650174.0	Chain
7	FROM NO. 15500594 (2X FOR CORN)	1	603290.0	1402317
7	FEEDER DRIVE TO NO. 15500593 (2X FORN CORN)	2	629836.1	0302302
7	FEEDER HOUSING LONG	2	061872.0	1402336
8		1	724100.0	1424398 EE-TECH
9	FANNING MILL	1	724141.0	0102257
10	GRAIN TANK UNLOADING	1	673614.1	1423188
11	HYDRAULIC PUMP	1	767057.1	0101099
12	AIR CONDITIONER	1	783268.1	0372234
13		1	785176.0	1401314
14	FEED RAKE DRIVE	1	802931.0	1401241
15	STRAW SPREADER	1	509435.0	0201343
16	OUTLET PIPE	1	605490.1	Chain
17	CUTTERBAR DRIVE	1	673638.1	1403239
18	DRIVE - VARIATOR	1	629756.0	1413195
19	BLOWER - VARIATOR	1	603380.1	1410210
20	SIEVE PAN DRIVE	1	724247.1	1402474
21	GROUND DRIVE	1	724181.0	1423389 EE-TECH
22	AT GRAIN	1	061902.0	1402479
22	AT CORN	1	062043.0	0102464
23	STRAW CHOPPER	2	061872.0	1402336
24	GRAIN TANK UNLOADING	1	725325.0	Chain
25	GRAIN ELEVATOR	1	686200.0	Chain
26	RETURNS ELEVATOR	1	600981.0	Chain
27	AT N = 650 - 1550 MIN-1	1	603015.1	1413166
27	AT N = 500 - 1400 MIN-1	1	644177.0	1414168
27	AT N = 650 - 1500 MIN-1	1	628630.0	1479291
27	DRUM CHAIN DRIVE	1	603132.1	Chain
28	FOR HPH - CHOPPER	1	629410.1	1402129
29	FOR HPH - CHOPPER	1	680334.1	1424212
30	PERKINS 6.3544	2	147228.1	1600100
30	PERKINS 1006.6	1	147233.1	0372244
30	MERCEDES OM 352	1	133523.0	0422134

DOMINATOR 76

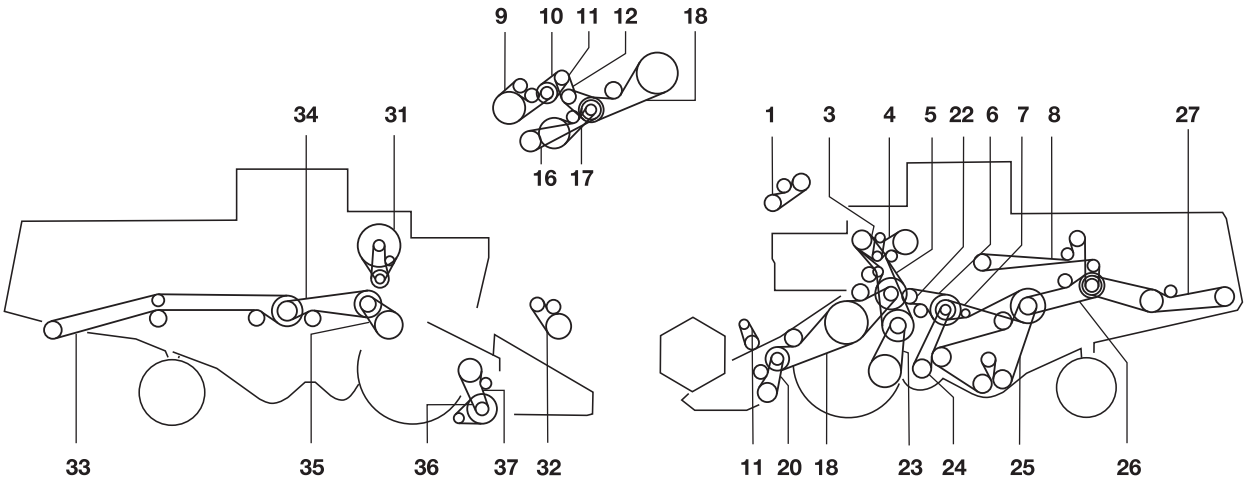

			OE	
1		1	673625.0	1424162
2	HYDRAULIC PUMP DRIVE	1	767057.1	0101099
3		1	621903.1	1443151
4	DISCHARGE AUGER SHAFT	1	673614.1	1423188
5	TRACTION DRIVE	1	671012.2	1424226 EE-TECH
6		1	603337.0	0202222
6	FAN DRIVE	1	672358.0	0302220
7	SIEVE DRIVE	1	672359.1	1429345
7		1	603336.1	1429345
8	ELEVATOR DRIVE UNIT	1	629732.2	1401405
9		1	603284.0	2354342
10		1	056961.0	1900106
11	REEL DRIVE VARIABLE SPEED	1	670224.1	1462186
12		1	056961.0	1900106
16		1	603283.0	0302220
17		1	603048.0	1454282
18		1	603122.0	1403325
20	KNIFE DRIVE	1	629214.1	1477269
21		1	673638.1	1403239
22		1	629436.0	1423274
23		1	629737.0	1413193
24		1	671209.0	1459293
25		2	603017.3	1402436
26		1	506671.2	1454323
27		1	623427.1	1401378
31		1	783430.1	1401129
32		1	603247.1	1424183
33		1	061360.1	1402621
34		1	060306.4	0702274
35		1	603015.1	1413166
36		1	629410.1	1402129
37		1	680334.1	1424212

DOMINATOR 78

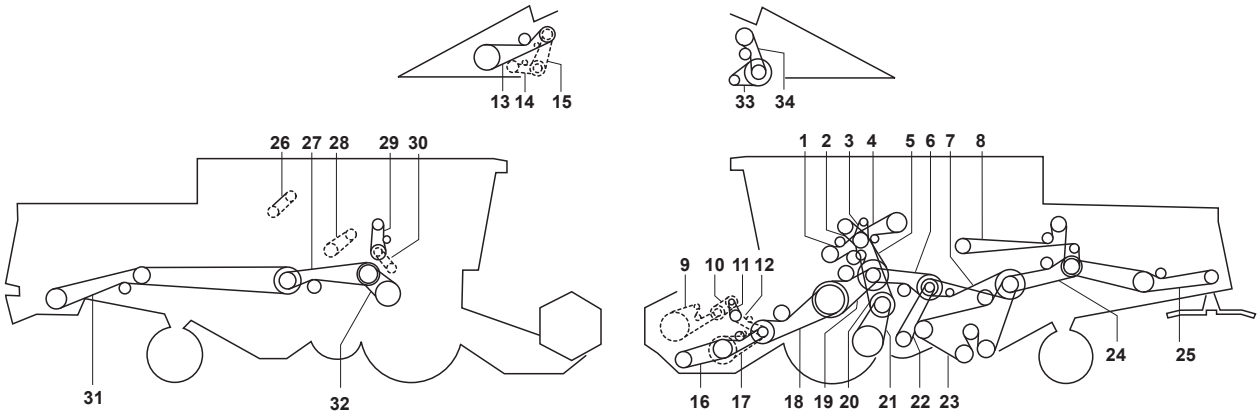

			OE	
1	AT HYDRAULIC GROUND DRIVE	1	673625.0	1424162
2	HYDRAULIC PUMP	1	767057.1	0101099
3	AT AIR CONDITIONING	1	629908.1	1443160
4		1	673614.1	1423188
5		1	671012.2	1424226 EE-TECH
6		1	603337.0	0202222
7		1	603336.1	1429345
8		1	629732.2	1401405
9	FOR CUTTERBAR	1	650193.0	Chain
10	FOR CUTTERBAR	1	670229.2	Chain
11	FOR CUTTERBAR	1	670224.1	1462186
12	AT 3.0 M CUTTERBAR	1	650296.0	☎
12	FROM 3.6 M CUTTERBAR	1	650191.2	Chain
13	FOR CORN PICKER	1	692149.0	1424269 EE-TECH
13	FOR CORN PICKER	1	692150.0	1424276
14	FOR CORN PICKER	1	692166.0	Chain
15	FOR CORN PICKER	1	503445.0	Chain
16	AT 3.0 M CUTTERBAR	2	778717.1	1401209
16	FROM 3.6 M CUTTERBAR	1	713506.2	0101200
17	AT 3.0 M CUTTERBAR	1	650262.0	☎
17	FROM 3.6 M CUTTERBAR	1	650174.0	Chain
18	FROM NO. 09101947 FOR CORN	1	603290.0	1402317
18	FEEDER DRIVE TO NO. 09101946 FOR CORN	2	629836.1	0302302
18	FROM NO. 09101947 FOR CORN	2	603290.0	1402317
18	FEEDER DRIVE TO NO. 09101946 FOR CORN	2	629836.1	0302302
19		1	673638.1	1403239
20	AT MECHANICAL GROUND DRIVE	1	603427.0	1423267
21	AT MECHANICAL GROUND DRIVE	1	603317.0	1413201
22		1	671209.0	1459293
23	RETURNS AUGER	2	603017.3	1402436
24		1	506671.2	1454323
25	FOR STRAW SPREADER	1	623427.1	1401378
26		1	605137.1	☎

DOMINATOR 78 (CONTINUED)

			OE	
27	FOR STRAW CHOPPER	1	060306.4	0702274
28		1	619278.0	Chain
29	ROTARY SCREEN	1	603341.0	1601120
30		1	600981.0	Chain
31	FOR GRAIN - CHOPPER	1	061360.1	1402621
31	FOR CORN CHOPPER	1	061214.0	1402609
32	AT N = 650 - 1500 MIN-1	1	628630.0	1479291
32	AT N = 500 - 1400 MIN-1	1	644177.0	1414168
32	AT CHAIN DRIVE	1	603132.1	Chain
32	AT CHAIN DRIVE	1	609790.0	Chain
33	FOR HPG - G CHOPPER	1	695610.1	1499313
34	FOR HPG - G CHOPPER	1	680334.1	1424212

DOMINATOR 80 - 85

			OE	
1	REEL DRIVE VARIABLE SPEED	1	670224.1	1462186
2	CUTTING TABLE DRIVE CLUTCH	1	560562.0	1403248
3	MAIN DRIVE	1	671012.2	1424226 EE-TECH
4	HYDRAULIC PUMP TRACTION DRIVE	1	673625.0	1424162
5	HYDRAULIC PUMP DRIVE	1	767057.1	0101099
5	HYDRAULIC PUMP DRIVE	1	532011.1	0101105
5	HYDRAULIC PUMP DRIVE	1	633030.2	0201108
5	HYDRAULIC PUMP DRIVE	1	656028.0	0201109
6	DISCHARGE DRIVE GRAIN TANK	1	673614.1	1423188
7	SHAKER SHOE FANNING MILL	1	672358.0	0302220
8	STRAW WALKER DRIVE	1	629036.0	1454407
8	STRAW WALKER DRIVE	1	673601.0	2002211
9	KNIFE DRIVE	1	769202.1	1454222
9	KNIFE DRIVE	1	629214.1	1477269
10	CUTTING TABLE DRIVE	1	778717.1	1401209
10	CUTTING TABLE DRIVE	1	673639.1	1403310
11	TRACTION DRIVE	1	720866.0	1423274
12	TRACTION VARIATOR DRIVE	1	671083.0	1413193
13	FAN MILL VARIABLE SPEED	1	671209.0	1459293
14	SHAKER SHOE RETURN AUGER	1	672359.1	1429345
15	AUGER (GRAIN)	1	673690.1	0102137
16	FEEDER AUGER	1	501925.0	0201215
17	COUNTERSHAFT DRIVE	1	060306.4	0702274
18	AIR INTAKE DRIVE	1	802931.0	1401241
19	STRAW CHOPPER DRIVE	1	060949.1	1402556
20	CYLINDER VARIATOR DRIVE	1	671015.0	1415180
20	CYLINDER VARIATOR DRIVE	1	629035.0	1415208
21	THRESHING MACHINE	1	671012.2	1424226 EE-TECH
21	THRESHING MACHINE	1	629510.1	1424238 EE-TECH

DOMINATOR 86

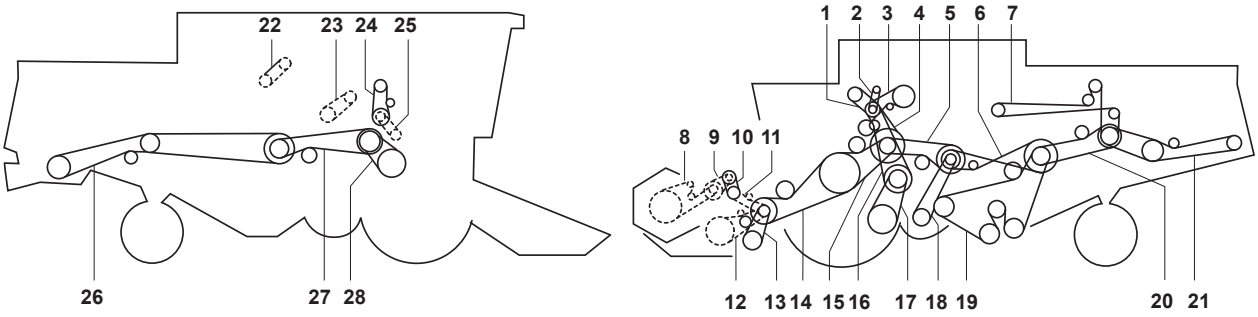

			OE	
1	HYDRAULIC PUMP DRIVE	1	767057.1	0101099
2		1	621903.1	1443151
3	DISCHARGE AUGER SHAFT	1	673614.1	1423188
4	TRACTION DRIVE	1	671012.2	1424226 EE-TECH
5		1	603337.0	0202222
6		1	603336.1	1429345
7	ELEVATOR DRIVE UNIT	1	629732.2	1401405
10	REEL DRIVE ELEVATOR	1	670224.1	1462186
13	KNIFE DRIVE	1	629214.1	1477269
14		1	603122.0	1403325
15		1	673638.1	1403239
16		1	603427.0	1423267
17		1	603317.0	1413201
18		1	671209.0	1459293
19		2	603017.3	1402436
20		1	506671.2	1454323
21		1	635494.1	1401304
24		1	603341.0	1601120
26		1	061361.0	1402547
27	WHEEL SHAFT (FRONT)	1	060306.4	0702274
28		1	603015.1	1413166
31		1	603247.1	1424183

DOMINATOR 88

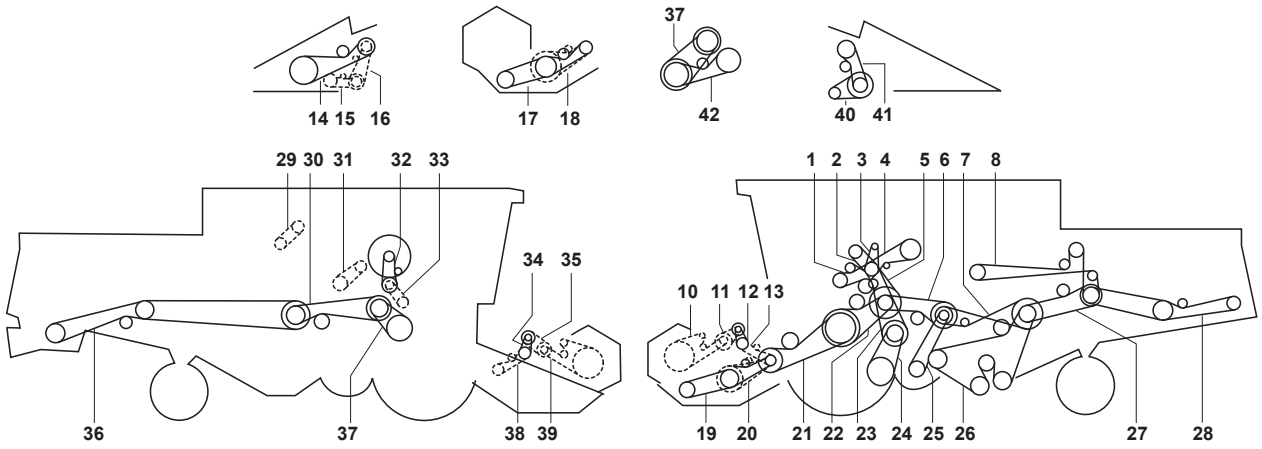

			OE	
1		1	673625.0	1424162
2	HYDRAULIC PUMP	1	767057.1	0101099
3		1	629908.1	1443160
4		1	673614.1	1423188
5		1	671012.2	1424226 EE-TECH
6		1	603337.0	0202222
7		1	603336.1	1429345
8		1	629732.2	1401405
10	AT 3.6 M - 5.1 M	1	650193.0	Chain
11	AT 3.6 M - 5.1 M	1	670229.2	Chain
12	AT 3.6 M - 5.1 M	1	670224.1	1462186
13	AT 3.6 M - 5.1 M	1	650191.2	Chain
14	FOR CORN PICKER	1	692149.0	1424269 EE-TECH
14	FOR CORN PICKER	1	692150.0	1424276
15	FOR CORN PICKER	1	692166.0	Chain
16	FOR CORN PICKER	1	503445.0	Chain
17	AT 6.0 M - 6.6 M	1	671013.1	0202230
18	AT 6.0 M - 6.6 M	1	676277.0	Chain
19	AT 3.6 M - 5.1 M	1	713506.2	0101200
20	AT 3.6 M - 5.1 M	1	650174.0	Chain
21	SHAFTS DISTANCE 1306 MM	2	603290.0	1402317
21	FEEDER DRIVE SHAFTS DISTANCE 1177 MM	2	629836.1	0302302
22		1	673638.1	1403239
23		1	609822.0	1424273 EE-TECH
24		1	609823.0	1414208
25		1	671209.0	1459293
26		2	603017.3	1402436
27		1	506671.2	1454323
28		1	635494.1	1401304
29		1	608745.0	Chain
30		1	060306.4	0702274
31		1	619278.0	Chain

DOMINATOR 88 (CONTINUED)

			OE	
32	ROTARY SCREEN	1	603341.0	1601120
33		1	600981.0	Chain
34	AT 6.0 M - 6.6 M	1	670224.1	1462186
35	AT 6.0 M - 6.6 M	1	670229.2	Chain
36	FOR GRAIN - CHOPPER	1	061361.0	1402547
36	FOR CORN - CHOPPER	1	061213.0	1402532
37	AT VAR. 7715	1	609823.0	1414208
37	AT N = 650 - 1500 MIN-1	1	628630.0	1479291
37	AT N = 500 - 1400 MIN-1	1	644177.0	1414168
37	AT CHAIN DRIVE	1	603132.1	Chain
37	AT CHAIN DRIVE	1	609790.0	Chain
38	AT 6.0 M - 6.6 M	1	670229.2	Chain
39	AT 6.0 M - 6.6 M	1	648166.0	Chain
40	FOR HPH-G CHOPPER	1	695610.1	1499313
41	FOR HPH-G CHOPPER	1	680334.1	1424212
42	AT VAR. 7715	1	661220.1	1424259

DOMINATOR 88 VX

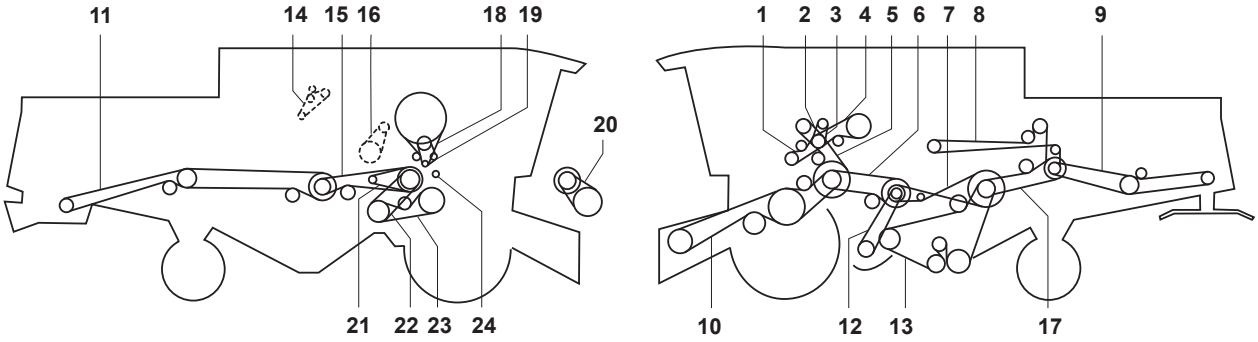

			OE	
1		1	544048.0	1425161
2		1	767057.1	0101099
3		1	629908.1	1443160
4		1	629769.1	1423207
5		1	671012.2	1424226 EE-TECH
6		1	603337.0	0202222
7		1	603336.1	1429345
8		1	644447.0	1401412
9		1	635494.1	1401304
10		2	661301.1	1402451
11	FOR CORN	1	061213.0	1402532
11		1	061361.0	1402547
12		1	671209.0	1459293
13		2	603017.3	1402436
15		1	060306.4	0702274
17		1	506671.2	1454323
18		1	661345.0	1400216
19		1	657793.0	1900089
20		1	628630.0	1479291
21		1	644448.1	1200149
22		1	609823.0	1414208
23		1	661220.1	1424259

DOMINATOR 96

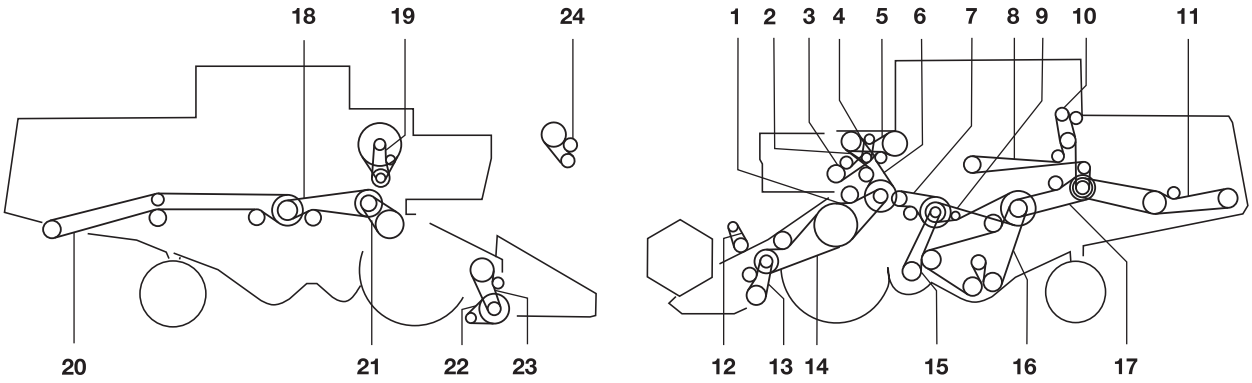

			OE	
2		1	767057.1	0101099
3		1	673625.0	1424162
4		1	621903.1	1443151
5		1	673614.1	1423188
6		1	671012.2	1424226 EE-TECH
7		1	603337.0	0202222
8		1	629732.2	1401405
9		1	603336.1	1429345
10		1	802931.0	1401241
11		1	623427.1	1401378
12		1	670224.1	1462186
13		1	629214.1	1477269
14		1	603122.0	1403325
15		1	671209.0	1459293
16		2	603017.3	1402436
17		1	506671.2	1454323
18		1	061306.2	1419300
19		1	603341.0	1601120
20		1	061360.1	1402621
21		1	603015.1	1413166
22		1	629410.1	1402129
23		1	680334.1	1424212
24		1	603247.1	1424183

DOMINATOR 98

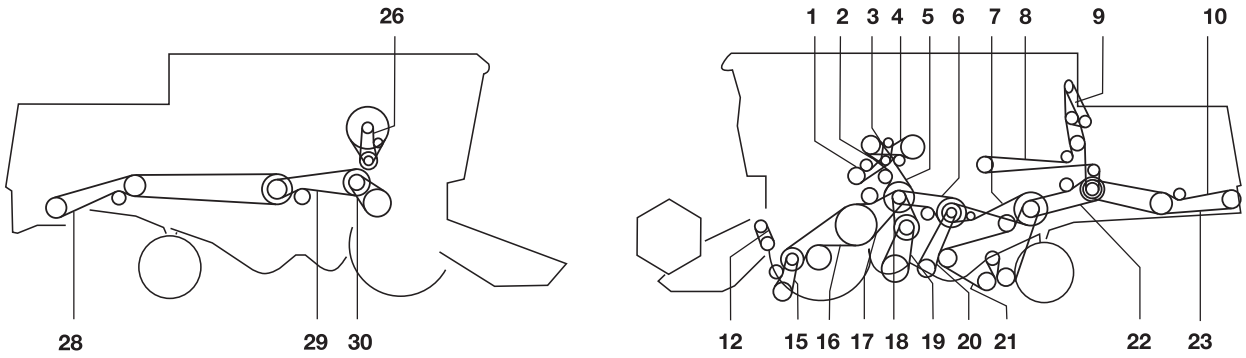

			OE	
1	MERCEDES ENGINE OM 352A	1	629001.2	1425165
1	MERCEDES ENGINE OM 360	1	673625.0	1424162
2	MERCEDES ENGINE OM 352A + PERKINS ENGINE T63544	1	603378.0	0201097
2	MERCEDES ENGINE OM 360	1	767057.1	0101099
3		1	629908.1	1443160
4		1	673614.1	1423188
5	MERCEDES ENGINE OM 360	1	671012.2	1424226 EE-TECH
5	MERCEDES ENGINE OM 352A + PERKINS ENGINE T63544	1	629000.1	1425229 EE-TECH
6		1	603337.0	0202222
7		1	603336.1	1429345
8		1	629732.2	1401405
9		1	802931.0	1401241
12		1	670224.1	1462186
15		1	713506.2	0101200
16	SHAFT BASE 1177 MM	2	629836.1	0302302
16	SHAFT BASE 1463 MM	2	061872.0	1402336
17		1	673638.1	1403239
18	MECHANICAL DRIVE	1	609822.0	1424273 EE-TECH
19	MECHANICAL DRIVE	1	609823.0	1414208
20		1	671209.0	1459293
21		2	603017.3	1402436
22		1	506671.2	1454323
23		1	623427.1	1401378
26		1	603341.0	1601120
28	FOR MAIZE STRAW CHOPPER	1	061214.0	1402609
28	FOR STRAW CHOPPER	1	061360.1	1402621
29	FOR STRAW CHOPPER	1	060306.4	0702274
30	CYLINDER N=650-1500 RPM	1	628630.0	1479291
30	CYLINDER N=500-1400 RPM	1	644177.0	1414168

DOMINATOR 98 VX

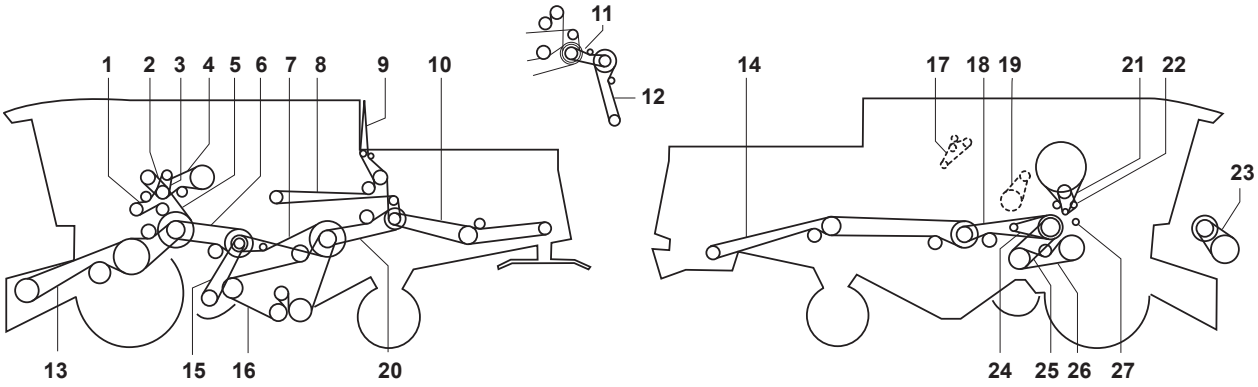

			OE	
1		1	544048.0	1425161
2		1	767057.1	0101099
3		1	629908.1	1443160
4		1	629769.1	1423207
5		1	661458.1	1425228
6		1	603337.0	0202222
7		1	603336.1	1429345
9		1	802931.0	1401241
10		1	623427.1	1401378
11		1	755070.2	1601120
12		1	785341.0	1401180
12		1	066034.0	1901188
14		1	061214.0	1402609
15		1	671209.0	1459293
16		2	603017.3	1402436
18		1	060306.4	0702274
20		1	506671.2	1454323
21		1	661345.0	1400216
22		1	657793.0	1900089
23		1	644418.1	1479291
24		1	644448.1	1200149
25		1	609823.0	1414208
26		1	661220.1	1424259

DOMINATOR 100 - 105

			OE	
1	REEL DRIVE VARIABLE SPEED	1	670224.1	1462186
2	CUTTING TABLE DRIVE	2	672353.0	0302390
3	THRESHING MACHINE	1	629000.1	1425229 EE-TECH
4	HYDRAULIC PUMP TRACTION DRIVE	1	629001.2	1425165
5	HYDRAULIC PUMP DRIVE	1	629002.1	1601103
6	DRIVE GRAIN TANK	1	673614.1	1423188
7	SHAKER SHOE FANNING MILL	1	672358.0	0302220
8	STRAW WALKER DRIVE	1	629036.0	1454407
9	KNIFE DRIVE	1	769202.1	1454222
9	KNIFE DRIVE	1	629214.1	1477269
10	FAN DRIVE VARIABLE SPEED	1	671209.0	1459293
11	SHAKER SHOE RETURN AUGER	1	672359.1	1429345
12	AUGER (GRAIN)	1	629081.1	1402307
13	ELEVATOR DRIVE UNIT	1	629732.2	1401405
14	FEEDER ELEVATOR	1	501925.0	0201215
15	COUNTERSHAFT DRIVE	1	060306.4	0702274
16	AIR INTAKE DRIVE	1	802931.0	1401241
17	STRAW CHOPPER DRIVE	1	061253.2	1402650
18	CYLINDER VARIATOR DRIVE	1	629035.0	1415208
19	THRESHING MACHINE	1	629510.1	1424238 EE-TECH

DOMINATOR 106

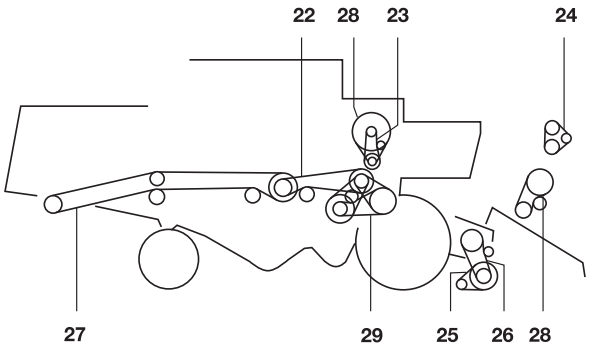

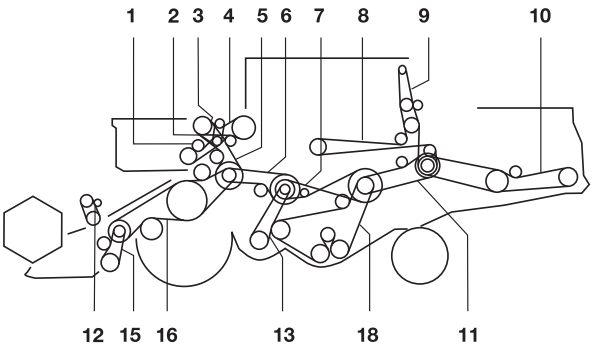

			OE	
1	HYDRAULIC PUMP DRIVE (OM 360)	1	629001.2	1425165
1	MAIN (OM 401)	1	629279.0	2025172
2	OM 360	1	603378.0	0201097
2	OM 401	1	689175.0	1401101
3		1	621903.1	1443151
4	GRAIN TANK (OM 360)	1	673614.1	1423188
4	GRAIN TANK (OM 401)	1	672351.0	1423192
5	MAIN/DRUM	1	629000.1	1425229 EE-TECH
6		1	603337.0	0202222
7	RETURN AUGER DRIVE	1	603336.1	1429345
8	ELEVATOR DRIVE UNIT	1	629732.2	1401405
9		1	640653.1	1901251
10		1	623427.1	1401378
11	STRAW WALKER DRIVE	1	506671.2	1454323
12	REEL DRIVE VARIABLE SPEED	1	670224.1	1462186
13		1	603380.1	1410210
15	KNIFE DRIVE	1	629214.1	1477269
16	TABLE DRIVE	2	629441.1	0302390
18	SIEVE PAN (FROM NR. 9000439)	1	609762.0	0323472
18	SIEVE PAN (TO NR. 9000438)	1	603033.0	1423476
22	COUNTERSHAFT DRIVE	1	060306.4	0702274
23		1	603341.0	1601120
24	ENGINE (OM 401)	1	133528.0	1472236
24	ENGINE (OM 401)	2	133549.1	1472238
24	ENGINE (OM 360)	1	685693.0	0372234
25		1	629410.1	1402129
26		1	680334.1	1424212
27	STRAW CHOPPER DRIVE	1	061360.1	1402621
28	DRUM DRIVE	1	629366.1	1424215
28	DRUM DRIVE	1	629035.0	1415208
29	CYLINDER	1	603354.0	1424250 EE-TECH

DOMINATOR 108 - 118 HYDR

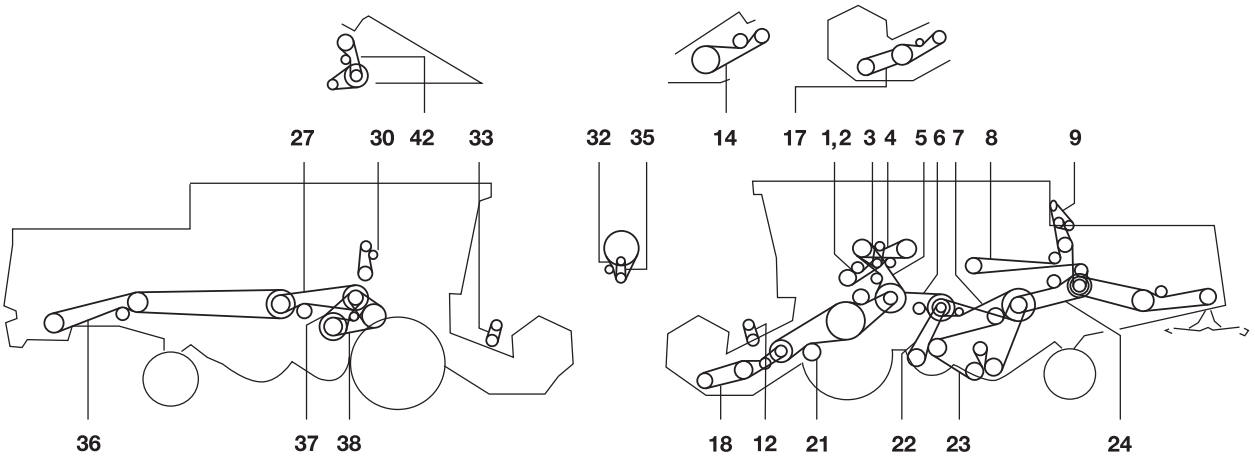

			OE	
1	FOR MERCEDES ENGINE OM 421	1	629279.0	2025172
1	FOR MERCEDES ENGINE OM 366 LA	1	644405.2	1425194
1	FOR MERCEDES ENGINE OM 441 A	1	661092.2	1426196
2		1	689175.0	1401101
3		1	629908.1	1443160
3	FOR VAR. 7705	1	661114.0	1443167
4	FOR VAR. 7605	1	660409.1	1423198
4	FOR VAR. 7705	1	661093.1	1423202
4	TO NR. 09403057	1	629763.0	1423210
5	TO NR. 09403057	1	629000.1	1425229 EE-TECH
5	FROM NR. 09403058	1	644404.1	1425254
6		1	603337.0	0202222
7		1	603336.1	1429345
8	TO NR. 09404032	1	629732.2	1401405
8	FROM NR. 09404033	1	644447.0	1401412
9	NOT SERIE MA	1	640653.1	1901251
12	FOR 3.9 M - 5.1 M	1	670224.1	1462186
14	FOR MAIZE PICKER	1	692149.0	1424269 EE-TECH
14	FOR MAIZE PICKER	1	692150.0	1424276
17	FOR 6.0 M - 9.0 M	1	671013.1	0202230
19	STRAW WALKER DRIVE	1	713506.2	0101200
21	SHAFT BASE 1177 MM	2	629441.1	0302390
21	SHAFT 1463 MM (TO NR. 09404032)	2	603017.3	1402436
21	SHAFT 1306 MM (TO NR. 09404032)	1	603430.1	1402412
21	SHAFT 1306 MM (FROM NR. 09404033)	1	644419.1	0302428
21	SHAFT 1463 MM (FROM NR. 0940433)	2	661301.1	1402451
22	COUNTERSHAFT DRIVE	1	603380.1	1410210
23		1	609762.0	0323472
24		1	506671.2	1454323
25		1	623427.1	1401378
27	STRAW CHOPPER DRIVE	1	060306.4	0702274

DOMINATOR 108 - 118 HYDR (CONTINUED)

			OE	
30		1	603341.0	1601120
30		1	783430.1	1401129
32	FROM NR. 09405335	1	661345.0	1400216
32	FOR RABA - ENGINE	1	783876.0	1417218
32	TO NR. 09405334	1	821734.2	0300206
33	FOR 6.0 M - 9.0 M	1	670224.1	1462186
35	FOR RABA - ENGINE	1	629764.0	1400072
35	FOR OM 366 LA	1	657793.0	1900089
35	FOR OM 366 LA	1	661244.0	1400119
35	FOR MERCEDES ENGINE OM 441 A	1	661245.0	2600124
35	FOR 6.0 M - 9.0 M	1	670229.2	Chain
36	CHOPPER DRIVE (MAIZE)	1	061214.0	1402609
36	CHOPPER DRIVE (GRAIN) (FROM NR. 09403058)	1	061353.1	1402622
36	CHOPPER DRIVE (GRAIN) (TO NR. 09403057)	1	061360.1	1402621
37	FROM NR. 09403058	1	609823.0	1414208
37	TO NR. 09403057	1	629035.0	1415208
38	VAR. 7818	1	661298.0	1423274
38	FOR N=510-1220 RPM	1	629510.1	1424238 EE-TECH
38	FOR N=650-1500 RPM	1	603354.0	1424250 EE-TECH
38	VAR. 7693 / VAR. 7716	1	661220.1	1424259
41		1	695610.1	1499313
42		1	680334.1	1424212
43	FOR AIR EXHAUST	1	644448.1	1200149

DOMINATOR 108 - 118 MECH

			OE	
1		1	689175.0	1401101
2		1	629908.1	1443160
3		1	629769.1	1423207
4	MAIN/DRUM	1	629000.1	1425229 EE-TECH
5		1	603337.0	0202222
6	RETURN AUGER DRIVE	1	603336.1	1429345
7	ELEVATOR DRIVE UNIT	1	629732.2	1401405
7	FROM NR. 09404033	1	644447.0	1401412
8		1	640653.1	1901251
11	FOR 3.9 M - 5.1 M	1	670224.1	1462186
13	FOR MAIZE PICKER	1	692149.0	1424269 EE-TECH
13	FOR MAIZE PICKER	1	692150.0	1424276
16	FOR 6.0 M - 9.0 M	1	671013.1	0202230
18	FOR 3.9 M - 5.1 M	1	713506.2	0101200
20	SHAFT BASE 1177 MM	2	629836.1	0302302
20	SHAFT 1306 MM	1	603290.0	1402317
21	TABLE CLUTCH	1	673638.1	1403239
22		1	609822.0	1424273 EE-TECH
23		1	609823.0	1414208
24		1	603380.1	1410210
25		1	609762.0	0323472
26		1	506671.2	1454323
27		1	623427.1	1401378
29	COUNTERSHAFT DRIVE	1	060306.4	0702274
32	TO NR. 09400750	1	603341.0	1601120
32	FROM NR. 09400751	1	783430.1	1401129
34	FOR 6.0 M - 9.0 M	1	670224.1	1462186
36	CHOPPER DRIVE (MAIZE)	1	061214.0	1402609
36	CHOPPER DRIVE (GRAIN) (FROM NR. 09403058)	1	061353.1	1402622
36	CHOPPER DRIVE (GRAIN) (TO NR. 09403057)	1	061360.1	1402621
37		1	628630.0	1479291
40		1	695610.1	1499313
41		1	680334.1	1424212
42	FOR TWO-STAGE DRIVE	1	661220.1	1424259

DOMINATOR 108 VX

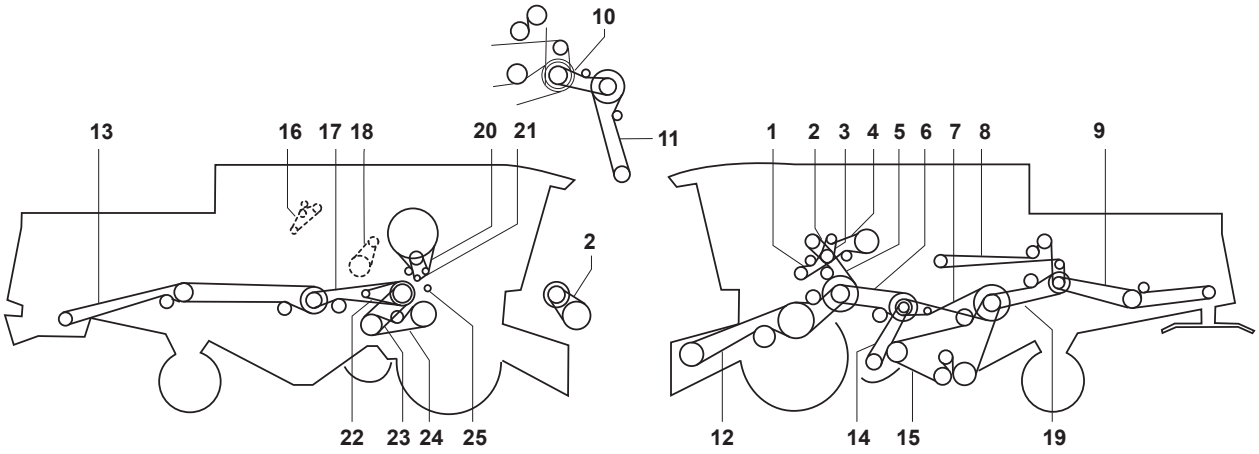

			OE	
1		1	544049.1	0223179
2		1	767057.1	0101099
3		1	629908.1	1443160
4		1	660409.1	1423198
5		1	644404.1	1425254
6		1	603337.0	0202222
7		1	644141.1	1429343
8		1	644447.0	1401412
9		1	623427.1	1401378
10		1	755070.2	1601120
11		1	785341.0	1401180
11		1	066034.0	1901188
12		1	661337.1	0102464
13		1	061214.0	1402609
13		1	061353.1	1402622
14		1	603380.1	1410210
15		1	609762.0	0323472
17		1	060306.4	0702274
19		1	506671.2	1454323
20		1	661345.0	1400216
21	MERCEDES ENGINE OM 366L	1	661244.0	1400119
21	MERCEDES ENGINE OM 441	1	661245.0	2600124
22		1	644448.1	1200149
23		1	609823.0	1414208
24		1	661298.0	1423274
24		1	661220.1	1424259

DOMINATOR 112

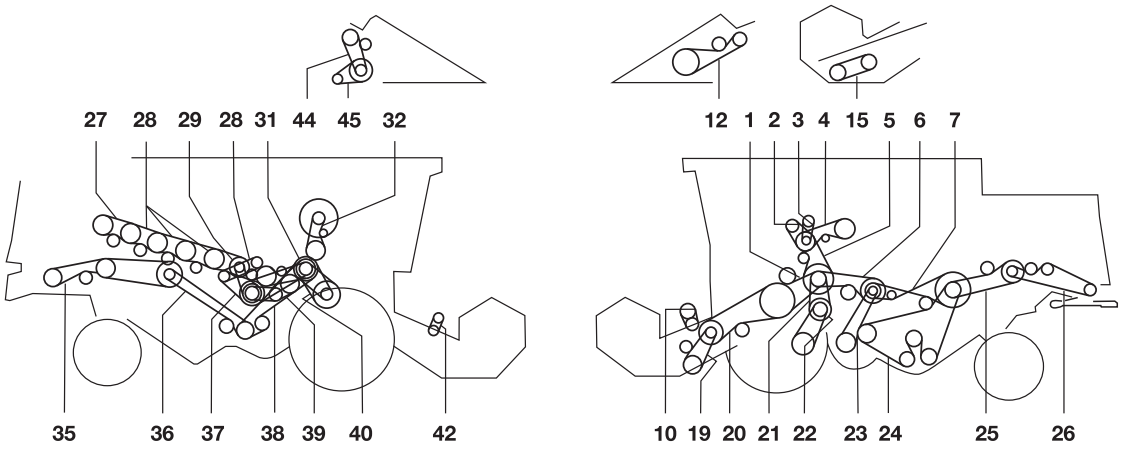

			OE	
1		1	673638.1	1403239
2		1	689175.0	1401101
3		1	629908.1	1443160
4		1	629769.1	1423207
5		1	629000.1	1425229 EE-TECH
6		1	603337.0	0202222
7		1	644141.1	1429343
12	FOR MAIZE PICKER	1	692149.0	1424269 EE-TECH
12	FOR MAIZE PICKER	1	692150.0	1424276
15	FROM 6.0 M CUTTING TABLE	1	671013.1	0202230
15	FOR SOJA CUTTING TABLE	1	644209.2	0102250
19	TO 5.1 M CUTTING TABLE	1	629214.1	1477269
20		2	629836.1	0302302
21		1	609822.0	1424273 EE-TECH
22		1	609823.0	1414208
23		1	603380.1	1410210
24		1	609762.0	0323472
25		1	506671.2	1454323
26		1	640653.1	1901251
27		1	644014.1	1902144
28		1	644015.1	1423179
29		1	644016.1	1424181
31		1	064168.2	1424251
35	FOR MAIZE	2	061872.0	1402336
35	FOR GRAIN	1	061701.2	1402358
36	FOR STRAW CHOPPER	1	061700.1	1423319
37		1	603247.1	1424183
38	FOR STRAW CHOPPER	1	061700.1	1423319
39		1	644014.1	1902144
40	CYLINDER N=650-1500 RPM	1	603015.1	1413166
40	CYLINDER N=500-1400 RPM	1	644177.0	1414168
42	FROM 6.0 M CUTTING TABLE	1	670224.1	1462186
44		1	680334.1	1424212
45		1	629410.1	1402129

DOMINATOR 114

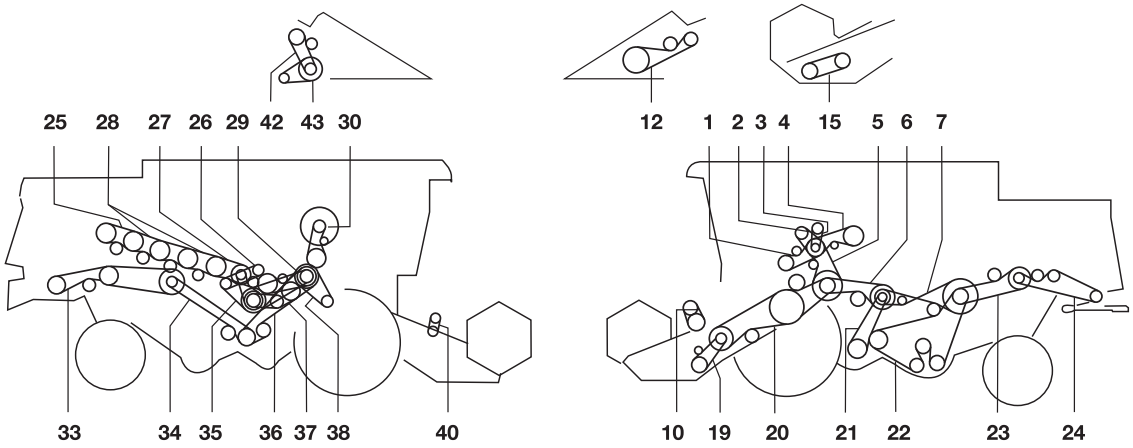

			OE	
1		1	629279.0	2025172
2		1	629002.1	1601103
3	TO NR. 14200046	1	621903.1	1443151
3	FROM NR. 14200047	1	629908.1	1443160
4		1	629763.0	1423210
5		1	629000.1	1425229 EE-TECH
6		1	603337.0	0202222
7		1	644141.1	1429343
10	TO 5.7 M CUTTING TABLE	1	670224.1	1462186
12	FOR MAIZE PICKER	1	692149.0	1424269 EE-TECH
12	FOR MAIZE PICKER	1	692150.0	1424276
15	FROM 6.0 M CUTTING TABLE	1	671013.1	0202230
15	FOR SOJA CUTTING TABLE	1	644209.2	0102250
19	TO 5.7 M CUTTING TABLE	1	629214.1	1477269
20		2	603017.3	1402436
21		1	603380.1	1410210
22		1	609762.0	0323472
23	FOR STRAW DISTRIBUTOR	1	506671.2	1454323
24	FOR STRAW DISTRIBUTOR	1	640653.1	1901251
25		1	644014.1	1902144
26		1	644015.1	1423179
27		1	644016.1	1424181
29		1	064168.2	1424251
30	TO NR. 14200176	1	603341.0	1601120
30	FROM NR. 14200177	1	233843.1	1401127
33	FOR MAIZE	2	061872.0	1402336
33	FOR GRAIN	1	061701.2	1402358
34	FOR STRAW CHOPPER	1	061700.1	1423319
35		1	603247.1	1424183
36	FOR STRAW CHOPPER	1	061700.1	1423319
37		1	344014.1	0202141
38	CYLINDER N=650-1500 RPM	1	603015.1	1413166
38	CYLINDER N=500-1400 RPM	1	644177.0	1414168
40	FROM 6.0 M CUTTING TABLE	1	670224.1	1462186
42		1	680334.1	1424212
43		1	629410.1	1402129

DOMINATOR 115

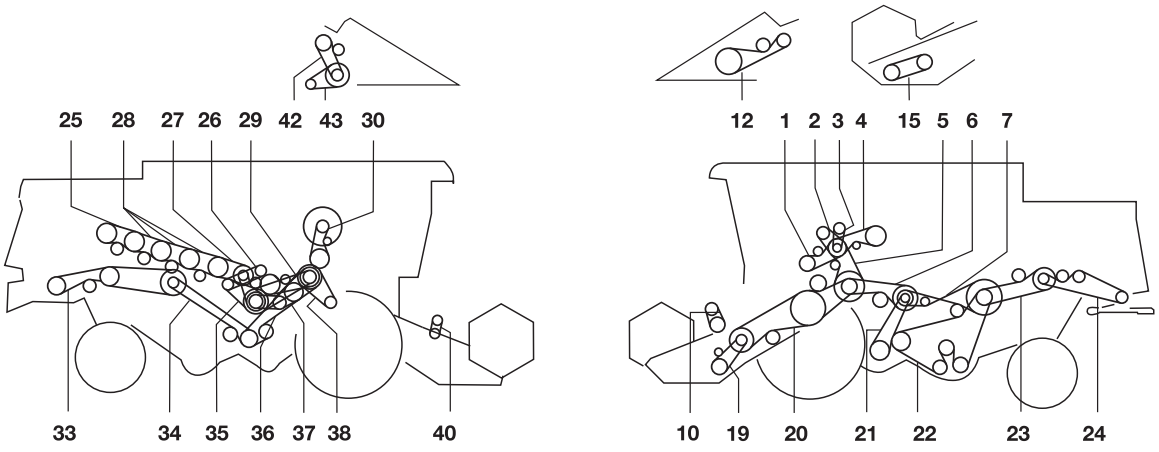

			OE	
1		1	629763.0	1423210
1		1	644017.1	1426173
2		1	629002.1	1601103
3		1	629908.1	1443160
5		1	644018.1	1426230
6		1	603337.0	0202222
7		1	644141.1	1429343
10	TO 5.1 M CUTTING TABLE	1	670224.1	1462186
12	FOR MAIZE PICKER	1	692149.0	1424269 EE-TECH
12	FOR MAIZE PICKER	1	692150.0	1424276
15	FROM 6.0 M CUTTING TABLE	1	671013.1	0202230
15	FOR SOJA CUTTING TABLE	1	644209.2	0102250
19	TO 5.1 M CUTTING TABLE	1	629214.1	1477269
20		2	603017.3	1402436
21		1	603380.1	1410210
22		1	609762.0	0323472
23	FOR STRAW DISTRIBUTOR	1	506671.2	1454323
24	FOR STRAW DISTRIBUTOR	1	640653.1	1901251
25		1	644014.1	1902144
26		1	644015.1	1423179
27		1	644016.1	1424181
29		1	064168.2	1424251
30		1	233843.1	1401127
33	FOR MAIZE	2	061872.0	1402336
33	FOR GRAIN	1	061701.2	1402358
34	FOR STRAW CHOPPER	1	061700.1	1423319
35		1	603247.1	1424183
36	FOR STRAW CHOPPER	1	061700.1	1423319
37		1	644014.1	1902144
38	CYLINDER N=650-1500 RPM	1	603015.1	1413166
38	CYLINDER N=500-1400 RPM	1	644177.0	1414168
40	FROM 6.0 M CUTTING TABLE	1	670224.1	1462186
42		1	680334.1	1424212
43		1	629410.1	1402129

DOMINATOR 116

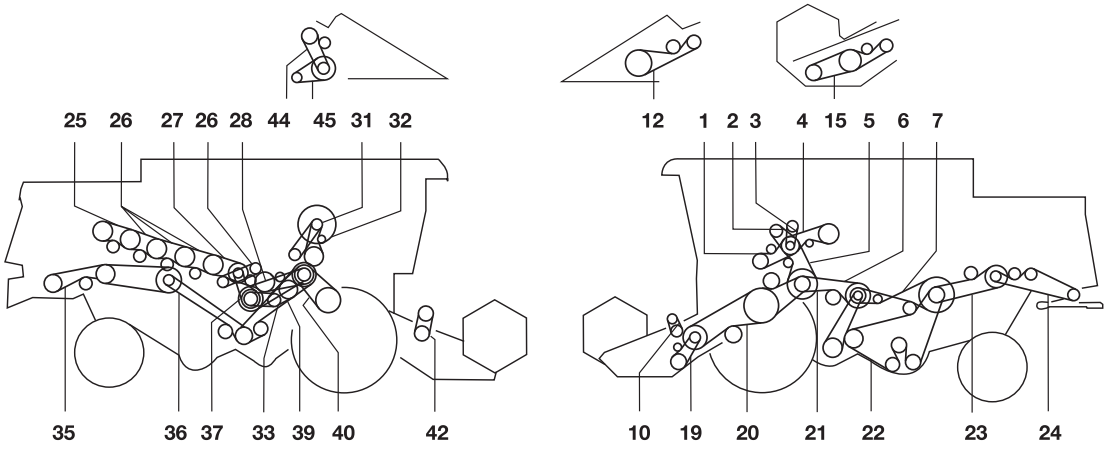

			OE	
1	HYDRAULIC PUMP DRIVE	1	644017.1	1426173
2	HYDRAULIC PUMP DRIVE (TO NR. 14400299)	1	689175.0	1401101
2	HYDRAULIC PUMP DRIVE (FROM NR. 14400300)	1	629002.1	1601103
3	TO NR. 14400199	1	621903.1	1443151
3	FROM NR. 14400200	1	629908.1	1443160
4	DRIVE GRAIN TANK	1	629763.0	1423210
5	MAIN DRIVE	1	644018.1	1426230
6		1	603337.0	0202222
7	RETURN AUGER DRIVE	1	603336.1	1429345
10	REEL DRIVE VARIABLE SPEED - TO 5.7 M CUTTING TABLE	1	670224.1	1462186
12	FOR MAIZE PICKER	1	692149.0	1424269 EE-TECH
12	FOR MAIZE PICKER	1	692150.0	1424276
15	FROM 6.0 M CUTTING TABLE	1	671013.1	0202230
15	FOR SOJA CUTTING TABLE	1	644209.2	0102250
19	KNIFE TO 5.7 M CUTTING TABLE	1	629214.1	1477269
20	TABLE (TO NR. 14400124)	2	629441.1	0302390
20	TABLE (FROM NR. 14400125)	2	603017.3	1402436
21		1	603380.1	1410210
22	SIEVE PAN DRIVE	1	609762.0	0323472
23	STRAW WALKER DRIVE	1	506671.2	1454323
24		1	640653.1	1901251
25		1	644014.1	1902144
26	ROLLER	1	644015.1	1423179
27	ROLLER	1	644016.1	1424181
28	INTERMEDIATE SHAFT	1	064168.2	1424251
31	SCREEN (TO NR. 14400299)	1	233843.1	1401127
31	SCREEN (FROM NR. 14400300)	1	644267.0	1401134
32	FROM NR. 14400300	1	633030.2	0201108
35	FOR MAIZE	2	061872.0	1402336
35	FOR GRAIN	1	061701.2	1402358
36	FOR STRAW CHOPPER	1	061700.1	1423319
37	STRAW WALKER DRIVE	1	603247.1	1424183

DOMINATOR 116 (CONTINUED)

			OE	Gates
38	FOR STRAW CHOPPER	1	061700.1	1423319
39		1	644014.1	1902144
40	CYLINDER N=650-1500 RPM	1	603015.1	1413166
40	CYLINDER N=500-1400 RPM	1	644177.0	1414168
42	FROM 6.0 M CUTTING TABLE	1	670224.1	1462186
44		1	680334.1	1424212
45		1	629410.1	1402129

DOMINATOR 118

			OE	Gates
1	AT MERCEDES OM 441 A	1	661092.2	1426196
1	AT MERCEDES OM 441 A 163 KW 4 GROOVE	1	644405.2	1425194
1	AT MERCEDES OM 421	1	629279.0	2025172
2	AT MERCEDES OM 441 A	1	633030.2	0201108
2	HYDRAULIC PUMP AT MERCEDES OM 366 LA	1	767057.1	0101099
2	HYDRAULIC PUMP 163 KW 4 GROOVE	1	767057.1	0101099
2		1	689175.0	1401101
3	AT MERCEDES OM 441 A	1	661114.0	1443167
3		1	629908.1	1443160
4	AT MERCEDES OM 441 A	1	661093.1	1423202
4	AT MERCEDES OM 366 LA WITH HYDRAULIC GROUND DRIVE	1	660409.1	1423198
4	AT MERCEDES OM 366 LA WITH MECHANICAL GROUND DRIVE	1	629769.1	1423207
4	AT MERCEDES OM 421	1	629763.0	1423210
4	AT PERKINS V8 540	1	629769.1	1423207
4	AT RABA - MOTOR	1	629763.0	1423210
5	AT 5 - RILL DRIVE FROM 09403058	1	644403.0	1426260
5	AT 4 - RILL DRIVE FROM NO. 09403058	1	644404.1	1425254
5	TO NO. 094030057	1	629000.1	1425229 EE-TECH
6		1	603337.0	0202222
7		1	603336.1	1429345
8	FROM NO. 09404033	1	644447.0	1401412
8	TO NO. 09404032	1	629732.2	1401405
9	NOT AT SERIES MAXI	1	640653.1	1901251
10	AT 3.9 M - 5.1 M	1	650193.0	Chain
11	AT 3.9 M - 5.1 M	1	670229.2	Chain
12	AT 3.9 M - 5.1 M	1	670224.1	1462186
13	AT 3.9 M - 5.1 M	1	650191.2	Chain
14	FOR CORN PICKER	1	692149.0	1424269 EE-TECH
14	FOR CORN PICKER	1	692150.0	1424276
15	FOR CORN PICKER	1	692166.0	Chain
16	FOR CORN PICKER	1	503445.0	Chain
17	AT 6.0 M - 9.0 M	1	671013.1	0202230
18	AT 6.0 M - 9.0 M	1	676277.0	Chain
19	AT 3.9 M - 5.1 M	1	713506.2	0101200

DOMINATOR 118 (CONTINUED)

			OE	
20	AT 3.9 M - 5.1 M	1	650174.0	Chain
21	SHAFTS DISTANCE 1306 MM FROM NO. 09404033	2	644419.1	0302428
21	TO NO. 0904032	2	603430.1	1402412
21	SHAFTS DISTANCE 1177 MM	2	629441.1	0302390
21	SHAFTS DISTANCE 1463 MM FROM NO. 09404033	2	661301.1	1402451
21	TO NO. 09404032	2	603017.3	1402436
22		1	603380.1	1410210
23		1	609762.0	0323472
24		1	506671.2	1454323
25		1	623427.1	1401378
26		1	608716.0	Chain
27		1	060306.4	0702274
28		1	818101.0	Chain
29		1	642492.0	Chain
30	AT MERCEDES - MOTOR FROM 09400751 - 09403057	1	783430.1	1401129
30	ROTARY SCREEN AT MERCEDES - MOTOR TO NO. 09400750	1	603341.0	1601120
31		1	600981.0	Chain
32	FROM NO. 09405335	1	661345.0	1400216
32	TO NO. 09405334	1	821734.2	0300206
32	AT RABA - MOTOR	1	783876.0	1417218
33	AT 6.0 M - 9.0 M	1	670224.1	1462186
34	AT 6.0 M - 9.0 M	1	670229.2	Chain
35	AT OM 366 LA 163 KW	1	661244.0	1400119
35	AT MERCEDES OM 441 A	1	661245.0	2600124
35	AT OM 366 LA 132 KW	1	657793.0	1900089
35	AT RABA - MOTOR	1	629764.0	1400072
36	FOR GRAIN CHOPPER FROM NO. 09403058	1	061353.1	1402622
36	FOR GRAIN CHOPPER TO NO. 09403057	1	061360.1	1402621
36	FOR CORN - CHOPPER	1	061214.0	1402609
37	FROM NO. 09403058	1	609823.0	1414208
37	TO NO. 09403057	1	629035.0	1415208
38	VAR. 7818 2 GROOVE	1	661298.0	1423274
38	VAR. 7693 / VAR. 7716 3 GROOVE	1	661220.1	1424259
38	AT N = 650 - 1500 MIN-1 TO 09403057	1	603354.0	1424250 EE-TECH
38	AT N = 510 - 1220 MIN-1 TO 09403057	1	629510.1	1424238 EE-TECH
38	AT CHAIN DRIVE	1	603348.0	☎
38	AT CHAIN DRIVE	1	718093.0	☎
39	AT 6.0 M - 9.0 M	1	670229.2	Chain
40	AT 6.0 M - 6.6 M	1	648166.0	Chain
40	AT 7.5 M - 9.0 M	1	645483.1	Chain
41	FOR HPH - G CHOPPER	1	695610.1	1499313
42	FOR HPH - G CHOPPER	1	680334.1	1424212
43	FOR SUCTION BLOWER	1	644448.1	1200149

DOMINATOR 128 VX

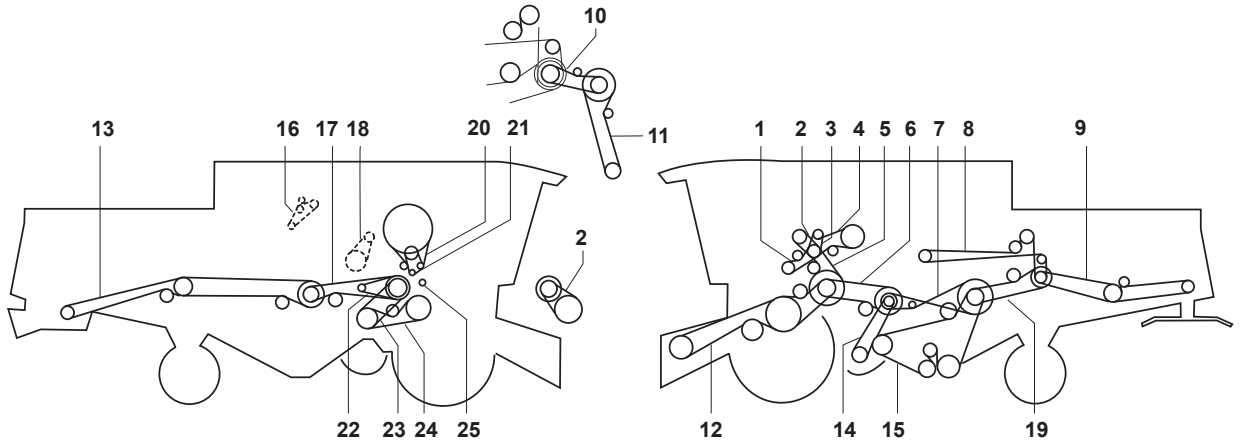

			OE	
1		2	544049.1	0223179
2	MERCEDES OM 906 LA	1	656028.0	0201109
2	MERCEDES OM 366 LA	1	767057.1	0101099
3	MERCEDES OM 906 LA	1	621903.1	1443151
3	MERCEDES OM 366 LA	1	629908.1	1443160
4		1	660409.1	1423198
5	MERCEDES OM 906 LA	1	544083.0	1425256
5	MERCEDES OM 366 LA	1	644404.1	1425254
6		1	603337.0	0202222
7		1	644141.1	1429343
8		1	644447.0	1401412
9		1	623427.1	1401378
10		1	755070.2	1601120
11	N = 519	1	066034.0	1901188
11	N = 660	1	785341.0	1401180
12		1	661337.1	0102464
13	FROM NO. 09408297	1	644539.0	1602631
13	TO NO. 09408296	1	061353.1	1402622
13	FOR CORN	1	061214.0	1402609
14		1	603380.1	1410210
15		1	609762.0	0323472
16		1	608716.0	Chain
17	FROM NO. 09408297	1	644538.0	1623311 EE-TECH
17	TO NO. 09408296	1	060306.4	0702274
18		1	818101.0	Chain
19		1	506671.2	1454323
20	MERCEDES OM 906 LA	1	545689.0	0300225
20	MERCEDES OM 366 LA	1	661345.0	1400216
21	MERCEDES OM 906 LA	1	545668.1	0200110
21	MERCEDES OM 366 LA	1	661244.0	1400119
22	FROM NO. 09408297	1	644537.0	1900151
22	TO NO. 09408296	1	644448.1	1200149
23	TWO STAGE DRIVE	1	609823.0	1414208
24	DRUM VARIABLE SPEED DRIVE N = 650 - 1500	1	661220.1	1424259
24	DRUM VARIABLE SPEED DRIVE N = 250 - 1250	1	661298.0	1423274
25		1	600981.0	Chain

DOMINATOR 130 - 140 - 150

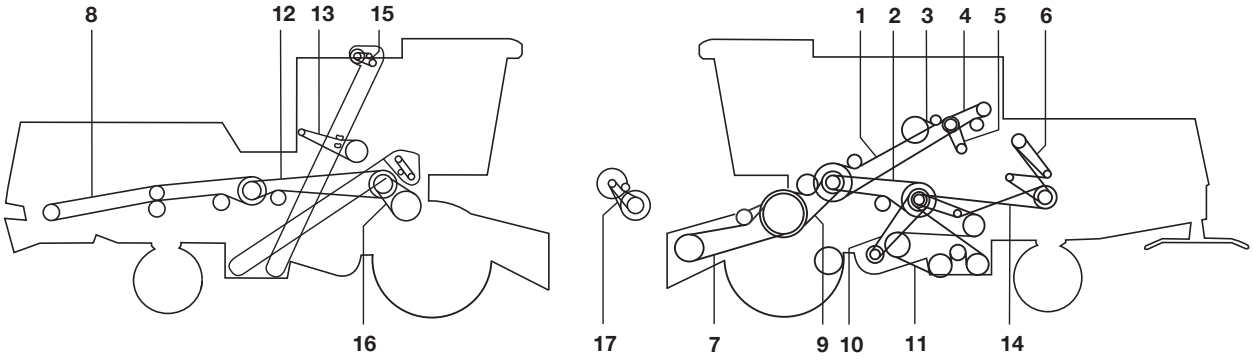

			OE	
1	THRESHING MECHANISM DRIVE	1	628888.0	1423400
2	SIEVE PAN DRIVE	1	724141.0	0102257
3	DISCHARGE DRIVE GRAIN TANK	1	672351.0	1423192
4	HYDRAULIC GROUND DRIVE	1	672350.1	1424166
5	AIR CONDITIONING COMPRESSOR DRIVE	1	349065.0	0172225
6	INTENSIVE SEPARATION SYSTEM DRIVE	1	802931.0	1401241
7	CUTTERBAR DRIVE	1	603290.0	1402317
8	CHOPPER DRIVE	1	061902.0	1402479
9	CUTTERBAR DRIVE	1	673638.1	1403239
10	FAN DRIVE VARIABLE SPEED	1	603380.1	1410210
11	SIEVE PAN DRIVE	1	724247.1	1402474
12	CHOPPER DRIVE	2	061872.0	1402336
13	GEAR GRAIN TANK	1	725325.0	Chain
14	STRAW WALKER DRIVE	1	785176.0	1401314
15	ELEVATOR CHAIN	1	686200.0	Chain
16	DRUM DRIVE VARIABLE SPEED (N=650-1500 RPM)	1	661430.0	1414168
16	DRUM DRIVE VARIABLE SPEED (N=500-1400 RPM)	1	661430.0	1414168
17	CHAIN DRIVE	1	603132.1	Chain

DOMINATOR 204 - 203 MEGA

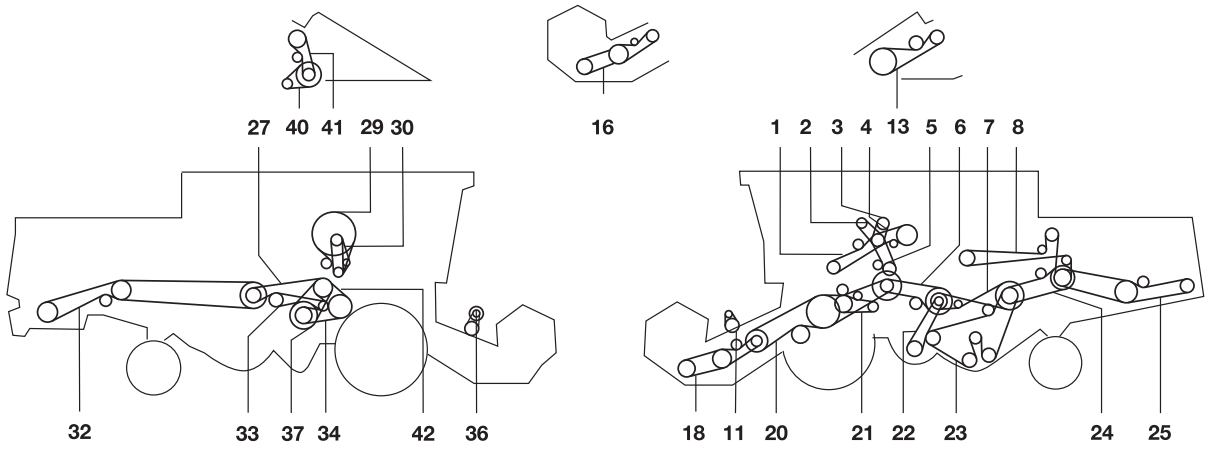

			OE	
0	FOR TWO-STAGE DRIVE	1	609823.0	1414208
0	FOR TWO-STAGE DRIVE	1	661220.1	1424259
1	TRAVEL DRIVE	1	661362.2	1425215
2	HYDRAULIC PUMP DRIVE	1	767057.1	0101099
3	AIR CONDITIONING COMPRESSOR DRIVE	1	629908.1	1443160
4	TANK UNLOADER DRIVE	1	629769.1	1423207
5	THRESHING MACHINE	1	661458.1	1425228
6	COUNTERSHAFT DRIVE	1	603337.0	0202222
7	FOR DOMINATOR 203 MEGA	1	603336.1	1429345
7	FOR DOMINATOR 204 MEGA	1	644141.1	1429343
11	REEL DRIVE BY 3.9 M - 5.1 M CUTTING TABLE	1	670224.1	1462186
13	FOR MAIZE PICKER	1	692149.0	1424269 EE-TECH
13	FOR MAIZE PICKER	1	692150.0	1424276
13	FOR MULTIMASTER	1	629142.0	1425218
16	FOR 6.0 - 7.5 M CUTTING TABLE	1	671013.1	0202230
18	KNIFE DRIVE 3.9 - 5.1 M CUTTING TABLE	1	713506.2	0101200
20	SHAFT BASE 1306 MM	1	661337.1	0102464
20	SHAFT BASE 1463 MM	1	661378.2	1402486
21	ACCELERATOR	1	661031.3	0223185
22	BLOWER - DOMINATOR 203 MEGA	1	671209.0	1459293
22	BLOWER - DOMINATOR 204 MEGA	1	603380.1	1410210
23	SHAKER SHOE - DOMINATOR 203 MEGA	2	603017.3	1402436
23	SHAKER SHOE - DOMINATOR 204 MEGA	1	609762.0	0323472
24	STRAW WALKER DRIVE	1	506671.2	1454323
25	STRAW DISTRIBUTOR	1	623427.1	1401378
27	STRAW CHOPPER DRIVE	1	060306.4	0702274
29	COOLER	1	661345.0	1400216
30	COUNTERSHAFT DRIVE	1	657793.0	1900089
32	STRAW CHOPPER (MAIZE)	1	061214.0	1402609
32	STRAW CHOPPER (GRAIN)	1	061360.1	1402621
33	DOMINATOR 204 MEGA N=650-1500 RPM	1	609823.0	1414208
34	DOMINATOR 204 MEGA N=650-1500 RPM	1	661220.1	1424259
35	REEL DRIVE BY 6.0 M - 7.5 M CUTTING TABLE	1	670224.1	1462186
37	AIR EXHAUST	1	644448.1	1200149
40	CHOPPER DRIVE	1	695610.1	1499313
41	CHOPPER DRIVE	1	680334.1	1424212
43	FOR MERCEDES ENGINE OM 366 LA	1	133635.1	1472251

DOMINATOR 218 - 208 MEGA

			OE	
0	REEL DRIVE BY 2 - STEP GEAR	1	661220.1	1424259
1	TRAVEL DRIVE - OM 366 LA	1	661451.0	1425229 EE-TECH
1	TRAVEL DRIVE - OM 441 A	1	661239.1	1426236 EE-TECH
2	HYDRAULIC PUMP DRIVE (OM 366)	1	767057.1	0101099
2	HYDRAULIC PUMP DRIVE (OM 441 A)	1	633030.2	0201108
3	AIR CONDITIONING COMPRESSOR DRIVE - OM 366 LA	1	629908.1	1443160
3	AIR CONDITIONING COMPRESSOR DRIVE - OM 441 A	1	661114.0	1443167
4	TANK UNLOADING - OM 366 LA	1	660409.1	1423198
4	TANK UNLOADING - OM 441 A	1	661093.1	1423202
5	THRESHING MACHINE - OM 366 LA	1	644404.1	1425254
5	THRESHING MACHINE - OM 441 A	1	644403.0	1426260
6	COUNTERSHAFT DRIVE	1	603337.0	0202222
7		1	644141.1	1429343
8		1	644447.0	1401412
11	REEL DRIVE BY 4.5 M - 5.1 M	1	670224.1	1462186
13	FOR MULTIMASTER	1	692149.0	1424269 EE-TECH
13	FOR MULTIMASTER	1	692150.0	1424276
13	FOR MULTIMASTER	1	629142.0	1425218
16	REEL DRIVE BY 6.0 M - 9.0 M	1	671013.1	0202230
18	REEL DRIVE BY 4.5 M - 5.1 M	1	713506.2	0101200
20	FEEDER CHANNEL	1	661378.2	1402486
21	FEEDER DRUM	1	661031.3	0223185
22	BLOWER DRIVE	1	603380.1	1410210
23	SHAKER SHOE DRIVE	1	609762.0	0323472
24	STRAW WALKER DRIVE	1	506671.2	1454323
25	STRAW DISTRIBUTOR	1	623427.1	1401378
27	STRAW CHOPPER DRIVE	1	060306.4	0702274
30	COOLER	1	661345.0	1400216
31	COUNTERSHAFT - OM 366 LA	1	661244.0	1400119
31	COUNTERSHAFT - OM 441 A	1	661245.0	2600124
33	STRAW CHOPPER (MAIZE)	1	061214.0	1402609
33	STRAW CHOPPER (GRAIN)	1	061353.1	1402622
34	TROMMELVORGELEGE	1	609823.0	1414208
35	REEL DRIVE BY N=510-1400 RPM	1	661298.0	1423274
35	REEL DRIVE BY N=650-1500 RPM	1	661220.1	1424259
36	REEL DRIVE BY 6.0 M - 9.0 M	1	670224.1	1462186
40	CHOPPER DRIVE	1	695610.1	1499313
41	CHOPPER DRIVE	1	680334.1	1424212
42	FOR AIR EXHAUST	1	644448.1	1200149

EUROPA

			OE	
1	BALER	1	506880.0	1430283
2	COUNTERSHAFT - STRAW CHOPPER	1	801221.0	1430231
2	KNIFE DRIVE	1	756051.0	0202168
3	TANK UNLOADER DRIVE	1	756059.0	1430228
3	TANK UNLOADER DRIVE	1	756051.0	0202168
4	RADIATOR FAN DRIVE	1	758719.0	1401122
4	RADIATOR FAN DRIVE	1	758662.1	2001129
5	CUTTING TABLE DRIVE	1	772657.1	0102189
6	SPREADER GRAIN IN TANK	1	775698.0	1401161
7	PICK UP DRIVE	1	800309.0	2301174
8	STRAW CHOPPER DRIVE	1	506940.0	1430658
9	SHAKER SHOE FANNING MILL	1	775049.0	1430480
10	HYDRAULIC PUMP DRIVE	1	755070.2	1601120
11	TRACTION DRIVE	1	750316.0	1429233
11	TRACTION DRIVE	1	750284.0	☎
12	THRESHING MACHINE	1	750888.0	1401234
13	TRACTION DRIVE	1	751112.0	1499326
14	SHAKER SHOE FANBALER	1	772658.0	1430746
14	SHAKER SHOE FANBALER	1	772659.0	☎
15	STRAW WALKER ELEVATOR	1	774100.0	1454423
15	STRAW WALKER ELEVATOR	1	773313.0	1429391
16	COUNTERSHAFT - STRAW CHOPPER	1	801221.0	1430231
22	CHAFF SPREADER DRIVE (LOWER)	1	123306A1	0301147

JAGUAR 60

			OE	
1	HYDRAULIC REMOTE CONTROL	1	211238.0	☎
2	ANGLE GEAR BOX N=540 RPM	2	943227.0	2837174
3	ANGLE GEAR BOX N=750 RPM	1	943234.0	☎
4	ANGLE GEAR BOX N=1000 RPM	1	211148.1	2137177

JAGUAR 70 SF

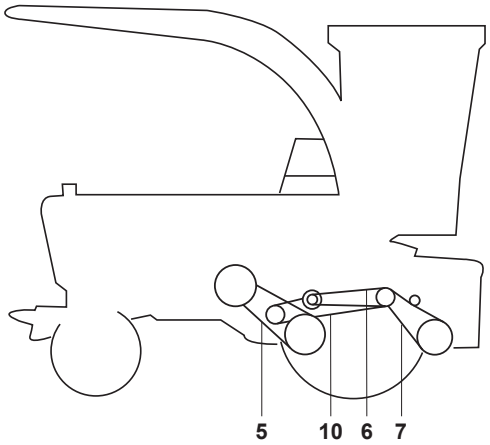

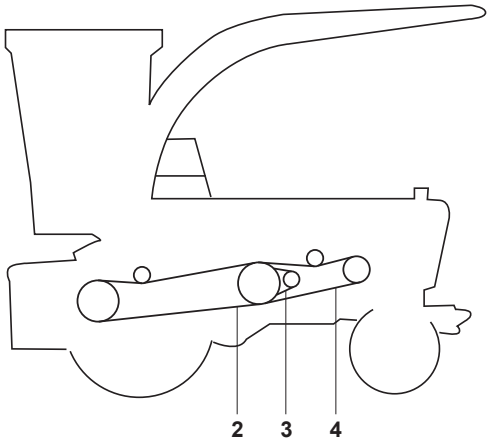

			OE	
2	DRUM DRIVE VARIABLE SPEED	1	063309.0	0325358
3	HYDRAULIC PUMP DRIVE	1	633030.2	0201108
4	ENGINE	1	063285.0	1426255
5	DRUM DRIVE VARIABLE SPEED	1	629412.0	1413193
5	DRUM DRIVE VARIABLE SPEED	1	629737.0	1413193
6	FEEDER DRIVE	1	618123.0	0101169
7	FEEDER DRIVE	1	063940.0	0302154
10	FEEDER DRIVE	1	062294.0	0104232

JAGUAR 75 - 71

			OE	
1	FEEDER SHAFT (UPPER)	1	981678.0	/

JAGUAR 85

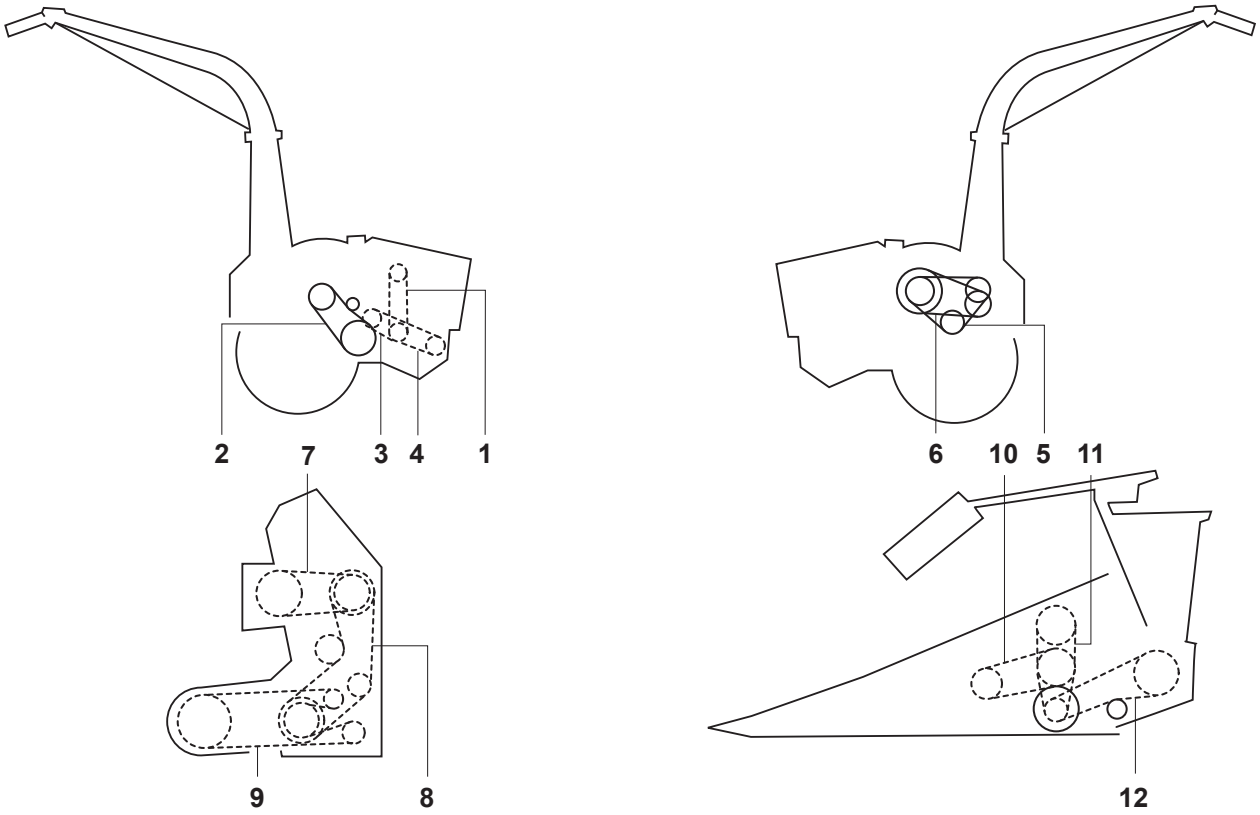

			OE	
1		1	211377.0	Chain
2	GRAIN TANK UNLOADER	1	673614.1	1423188
3		1	233480.0	Chain
4		1	942752.0	Chain
5		1	981044.0	☎
6		1	633030.2	0201108
7		1	920077.3	Chain
8		1	211437.0	Chain
9		1	233630.0	Chain
10		2	958004.2	Chain
11		2	955001.6	Chain
12		1	958000.5	Chain

JAGUAR 670

			OE	
1	MAIN DRIVE	1	077796.0	1449760
2	ALTERNATOR DRIVE	1	512087.0	0172253
3	COMPRESSOR DRIVE	1	052393.1	1400115
4	FAN DRIVE	1	077400.0	0101168
5	CLEANING FAN DRIVE	1	077276.0	1400290
6		1	076403.1	1470339

JAGUAR 675

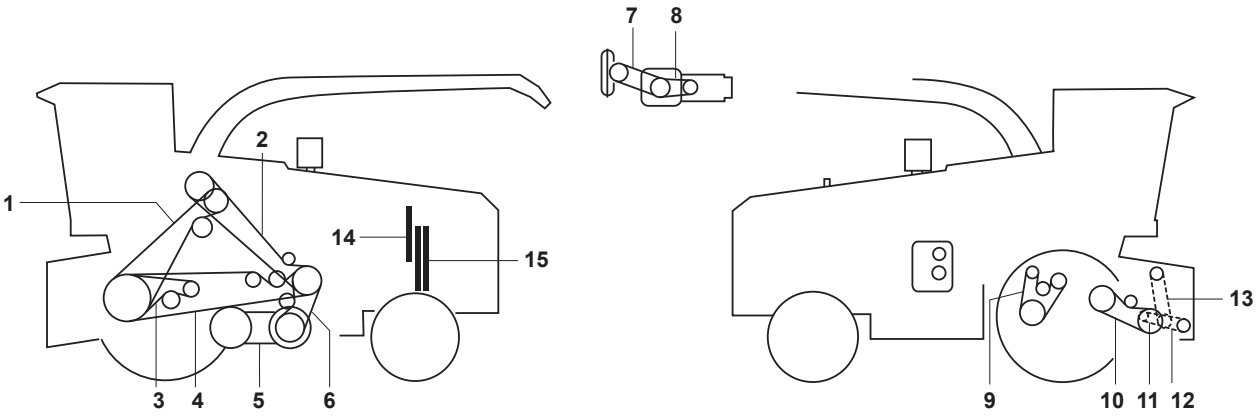

			OE	
1	FEEDER DRIVE	2	629836.1	0302302
2		1	070310.1	0101298
3	FOR CORN - CRACKER	1	629769.1	1423207
4		1	070953.1	1425408
5		1	609823.0	1414208
6		1	644016.1	1424181
7	FOR HYDRAULIC PUMP	1	750193.2	0401111
8	FOR AIR CONDITIONING	1	659025.0	1400066
9	FOR CORN - CRACKER	1	072110.0	1470277
10		1	673614.1	1423188
11		1	233480.0	Chain
12		1	942752.0	Chain
13		1	211377.0	Chain
14	FOR ALTERNATOR AT OM 421	1	133528.0	1472236
15	COOLING AT OM 421	2	133630.1	0372234
15	COOLING AND ALTERNATOR AT OM 360	2	685693.0	0372234

JAGUAR 675 HYDRO

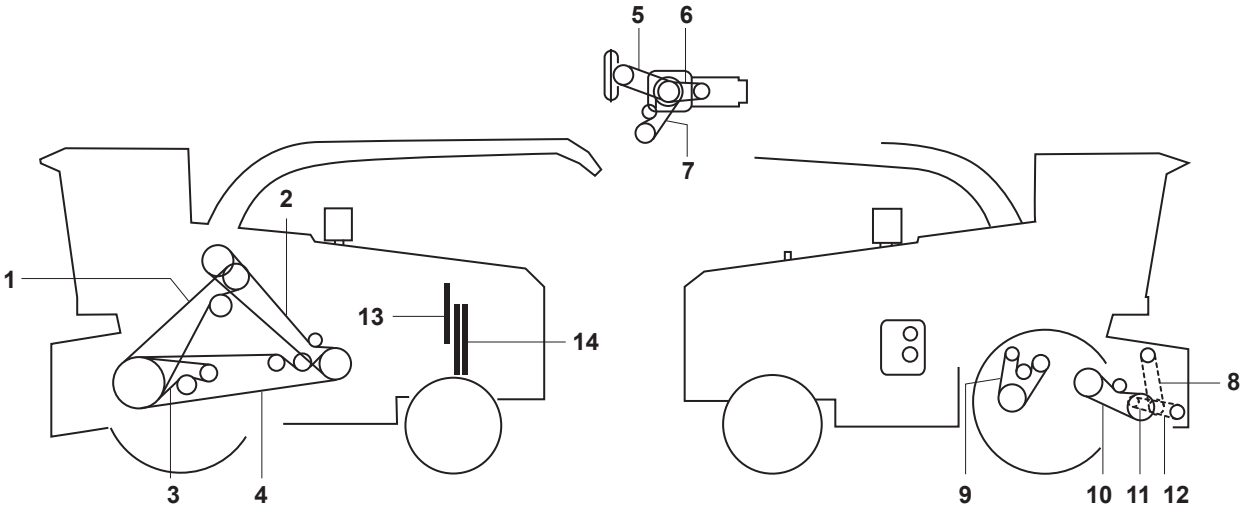

			OE	
1	FEEDER DRIVE	2	629836.1	0302302
2		1	070310.1	0101298
3	FOR CORN CRACKER	1	629769.1	1423207
4		1	070953.1	1425408
5	FOR HYDRAULIC PUMP	1	750193.2	0401111
6	FOR AIR CONDITIONING	1	659025.0	1400066
7		1	176543.1	1424163
8		1	211377.0	Chain
9	FOR CORN CRACKER	1	072110.0	1470277
10		1	673614.1	1423188
11		1	233480.0	Chain
12		1	942752.0	Chain
13	FOR ALTERNATOR	1	133528.0	1472236
14	FOR COOLING	2	133630.1	0372234

JAGUAR 680

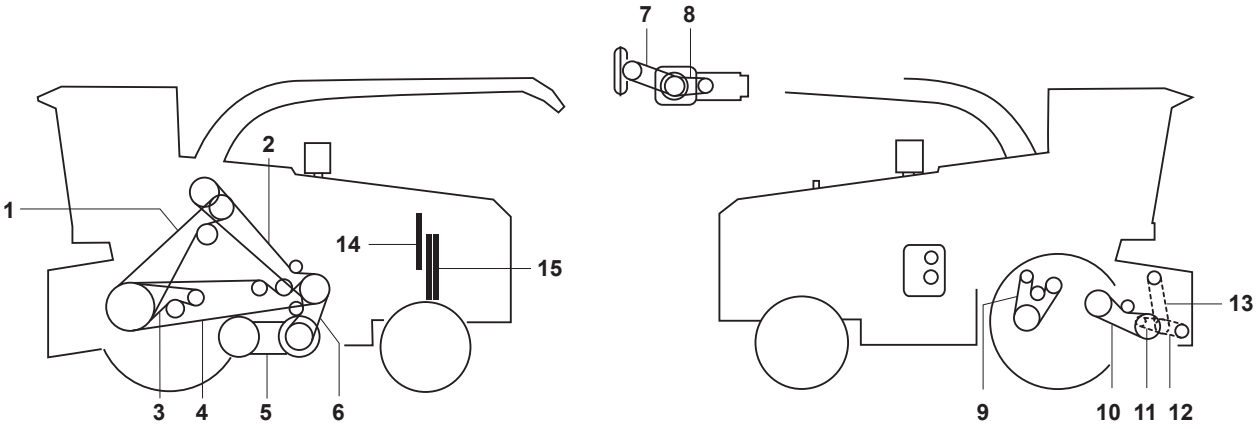

			OE	
1	FEEDER DRIVE	2	629836.1	0302302
2		1	070310.1	0101298
3	FOR CORN CRACKER	1	629769.1	1423207
4		1	070953.1	1425408
5		1	609823.0	1414208
6		1	644016.1	1424181
7	FOR HYDRAULIC PUMP	1	750193.2	0401111
8	FOR AIR CONDITIONING	1	659025.0	1400066
9	FOR CORN CRACKER	1	072110.0	1470277
10		1	673614.1	1423188
11		1	233480.0	Chain
12		1	942752.0	Chain
13		1	211377.0	Chain
14	FOR ALTERNATOR AT OM 421	1	133528.0	1472236
15	COOLING AT OM 421	2	133630.1	0372234
15	COOLING AND ALTERNATOR AT OM 360	2	685693.0	0372234

JAGUAR 680 HYDRO

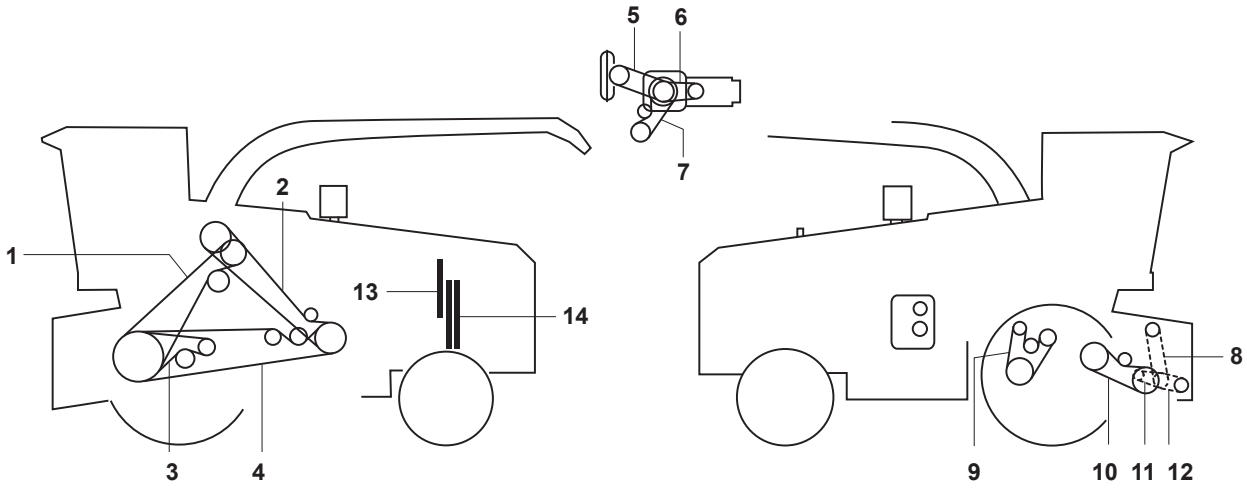

			OE	
1		2	629836.1	0302302
2		1	070310.1	0101298
3	FOR CORN CRACKER	1	629769.1	1423207
4		1	070953.1	1425408
5	FOR HYDRAULIC PUMP	1	750193.2	0401111
6	FOR AIR CONDITIONING	1	659025.0	1400066
7		1	176543.1	1424163
8		1	211377.0	Chain
9	FOR CORN CRACKER	1	072110.0	1470277
10		1	673614.1	1423188
11		1	233480.0	Chain
12		1	942752.0	Chain
13	FOR ALTERNATOR	1	133528.0	1472236
14	FOR COOLING	2	133630.1	0372234

JAGUAR 682

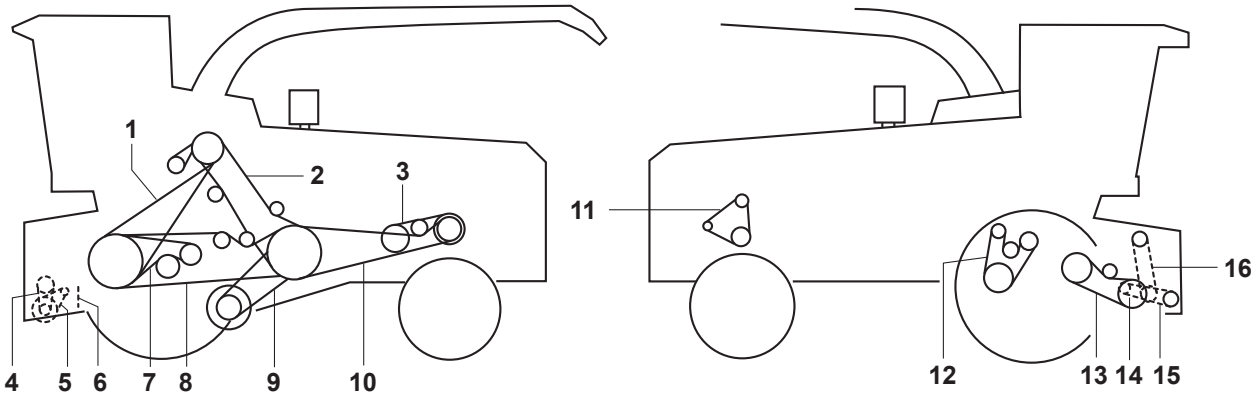

			OE	
1	FOR ACCELERATOR	1	629732.2	1401405
2	FOR SLIP DRIVE	1	070310.1	0101298
3	FOR HYDRAULIC PUMP FROM NO. 18600322	1	634019.2	0301155
3	FOR HYDRAULIC PUMP TO NO. 18600321	1	750294.0	2001143
4		1	073971.0	☎
5		1	073970.0	☎
6	FOR FRONT ATTACHMENT DRIVE	1	073972.0	☎
7	FOR CORN CRACKER	1	629763.0	1423210
8	FOR CHOPPER DRUM	1	073202.1	1425378 EE-TECH
9	AT MECHANICAL GROUND DRIVE	1	629756.0	1413195
9	AT HYDRAULIC GROUND DRIVE	1	073203.1	1424202
10	MOTOR - INTERMEDIATE DRIVE FROM NO. 18600322	1	073199.0	0325362
10	MOTOR - INTERMEDIATE DRIVE TO NO. 18600321	1	073201.1	0325362
11	ALTERNATOR MERCEDES FROM NO. 18600322	1	133641.0	1472264
11	ALTERNATOR PERKINS TO NO. 18600321	1	602387.1	0122155
12	FOR CORN CRACKER	1	073204.1	1470303
13	AT 4G - CHAIN DRIVE	1	644015.1	1423179
13	AT 6G - TRANSMISSION	1	673614.1	1423188
14		1	233480.0	Chain
15		1	942752.0	Chain
16		1	211377.0	Chain

JAGUAR 682 S - SL

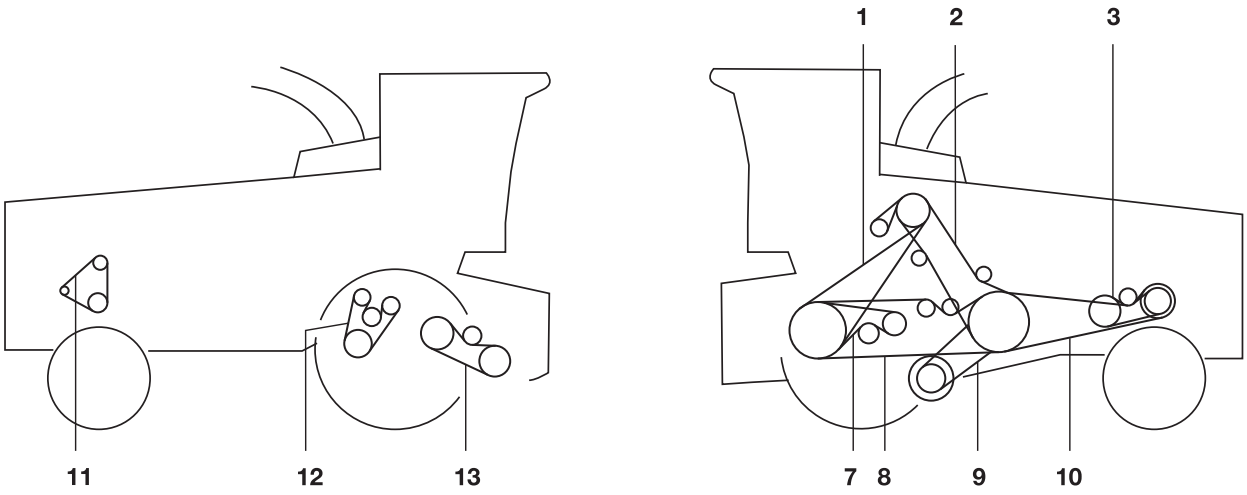

			OE	
1	DRUM DRIVE VARIABLE SPEED	1	629732.2	1401405
2	STRAW WALKER DRIVE	1	070310.1	0101298
3	HYDRAULIC PUMP DRIVE	1	750294.0	2001143
7	CORN CRACKER DRIVE	1	629763.0	1423210
8	THRESHING DRUM VARIATOR DRIVE	1	073202.1	1425378 EE-TECH
9	HYDROSTATIC SPEED DRIVE	1	073203.1	1424202
9	MECHANICAL DRIVE	1	629756.0	1413195
10	ENGINE	1	073201.1	0325362
11	ALTERNATOR DRIVE	1	602387.1	0122155
12	CORN CRACKER DRIVE	1	073204.1	1470303
13	FEEDER DRIVE	1	644015.1	1423179
13	FEEDER DRIVE	1	673614.1	1423188

JAGUAR 685 - 690

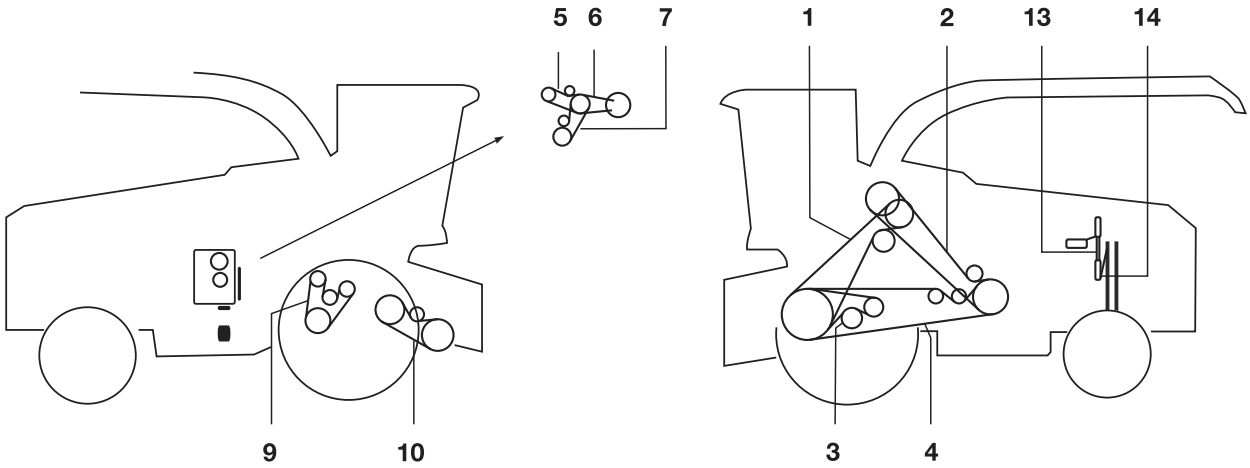

			OE	
1	DRUM DRIVE	2	629836.1	0302302
2	FEEDER DRIVE	1	070310.1	0101298
3	LEFT CORN-CRACKER DRIVE	1	629769.1	1423207
4	HEAD DRUM DRIVE	1	070952.2	1426410
5	HYDRAULIC PUMP DRIVE	1	750193.2	0401111
6	AIR CONDITIONING COMPRESSOR DRIVE	1	659025.0	1400066
7	HYDRAULIC SPEED DRIVE	1	673625.0	1424162
7	HYDRAULIC SPEED DRIVE	1	176543.1	1424163
9	CORN - CRACKER DRIVE RIGHT	1	072110.0	1470277
10	CHOPPER DRIVE	1	673614.1	1423188
13	ALTERNATOR DRIVE	1	133528.0	1472236
14	COOLING FAN	1	133630.1	0372234
15	FOR COMBINE PLATFORM	1	673614.1	1423188

JAGUAR 690 SL

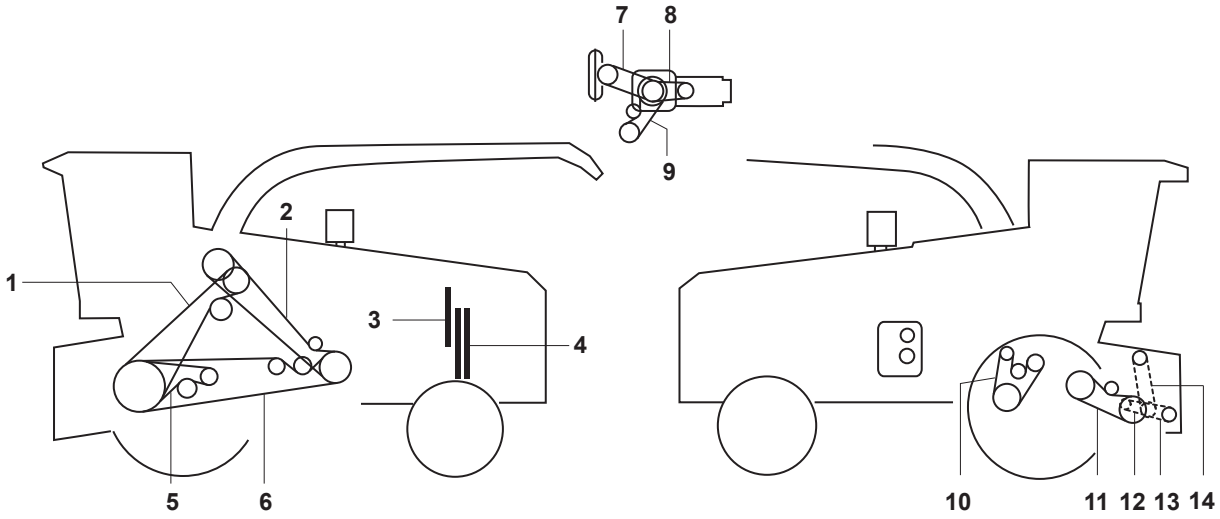

			OE	
1	FOR ACCELERATOR	2	629836.1	0302302
2	FOR SLIP DRIVE	1	070310.1	0101298
3	FOR ALTERNATOR	1	133528.0	1472236
4	FOR MOTOR COOLING	1	133630.1	0372234
5	FOR CORN CRACKER	1	629763.0	1423210
6	AT JAGUAR 690 SL FROM NO. 18800012	1	074803.2	1426413
6	AT JAGUAR 690 SL TO NO. 18800011	1	070952.2	1426410
7	FOR HYDRAULIC PUMP	1	750193.2	0401111
8	FOR AIR CONDITIONING	1	659025.0	1400066
9	FOR GROUND DRIVE	1	176543.1	1424163
10	FOR CORN CRACKER	1	073204.1	1470303
11	FOR FEEDER DRIVE	1	673614.1	1423188
12		1	233480.0	Chain
13		1	942752.0	Chain
14		1	211377.0	Chain

JAGUAR 695 - 685 SL

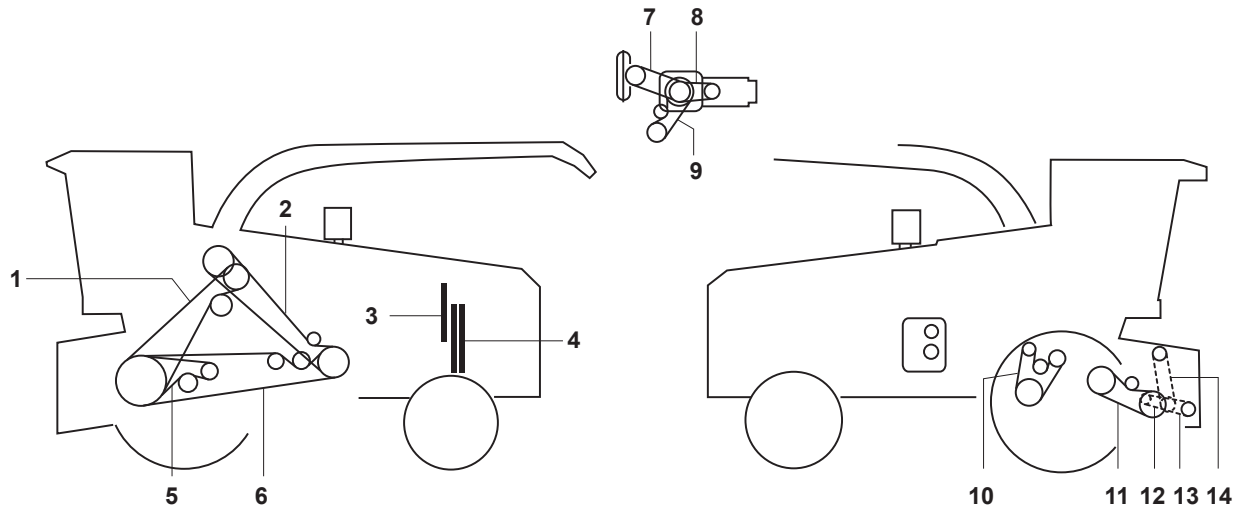

			OE	
1	DRUM DRIVE	2	629836.1	0302302
2	FEEDER DRIVE	1	070310.1	0101298
3	ALTERNATOR DRIVE	1	133528.0	1472236
4	COOLING FAN	1	133630.1	0372234
5	CORN CRACKER DRIVE	1	629763.0	1423210
6	FOR JAGUAR 690/685 SL	1	070952.2	1426410
6	FOR JAGUAR 690/685 SL	1	074803.2	1426413
6	FOR JAGUAR 695 SL	1	074771.2	1426423
7	HYDRAULIC PUMP DRIVE	1	750193.2	0401111
8	AIR CONDITIONING COMPRESSOR DRIVE	1	659025.0	1400066
9	DRUM DRIVE VARIABLE SPEED	1	176543.1	1424163
10	CORN CRACKER DRIVE	1	073204.1	1470303
11	FEEDER DRIVE	1	673614.1	1423188
15	FOR COMBINE PLATFORM	1	673614.1	1423188

JAGUAR 800

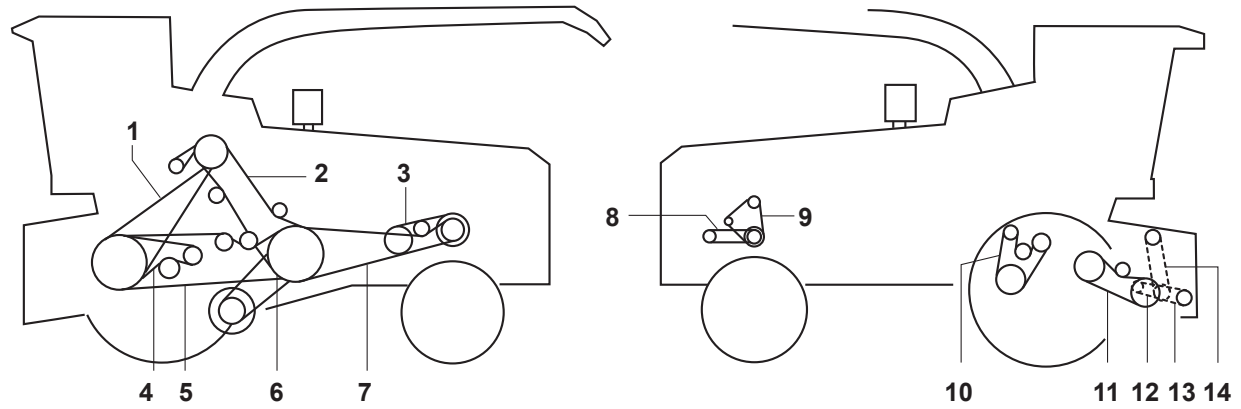

			OE	
1	FOR ACCELERATOR	1	629732.2	1401405
2	FOR SLIP DRIVE	1	070310.1	0101298
3	FOR HYDRAULIC PUMP	1	634019.2	0301155
4	FOR CORN CRACKER	1	629763.0	1423210
5	FOR CHOPPER DRUM	1	073202.1	1425378 EE-TECH
6	AT MECHANICAL GROUND DRIVE	1	629756.0	1413195
6	AT HYDRAULIC GROUND DRIVE	1	073203.1	1424202
7	MOTOR - INTERMEDIATE DRIVE	1	073199.0	0325362
8	FOR AIR CONDITIONING	1	667560.1	1472264
9	FOR ALTERNATOR	1	133641.0	1472264
10	FOR CORN CRACKER	1	073204.1	1470303
11	FOR FEEDER HOUSING	1	673614.1	1423188
12		1	233480.0	Chain
13		1	942752.0	Chain
14		1	211377.0	Chain

JAGUAR 820 - 840

			OE	
1	MAIN DRIVE FOR JAGUAR 820	1	077797.1	1426712
1	MAIN DRIVE FOR JAGUAR 840	1	077796.1	1449760
2	ALTERNATOR DRIVE	1	512087.0	0172253
3	COMPRESSOR DRIVE	1	052393.1	1400115
4	FAN DRIVE	1	077400.0	0101168
5	CLEANING FAN DRIVE	1	077276.0	1400290
6	CORN CRACKER DRIVE	1	076403.1	1470339
7	BLOWER DRIVE	1	984855.0	☎

JAGUAR 830

			OE	
1	MAIN DRIVE	1	067745.0	1426744
2	FAN DRIVE FOR OM 502 LA	1	067289.0	1442293
2	FAN DRIVE FOR OM 457 LA	1	067290.0	1442228
2	FAN DRIVE FOR OM 460 LA	1	142232.0	1442253
3	CORN CRACKER DRIVE	1	076403.1	1470339
3	CORN CRACKER DRIVE	1	067789.0	1499333
4	CHOPPER DRIVE	1	984885.1	1424202
4	CHOPPER DRIVE	1	987883.0	1425204

JAGUAR 850

			OE	
1	MAIN DRIVE	1	067746.0	1449787
2	FAN DRIVE FOR OM 502 LA	1	067289.0	1442293
2	FAN DRIVE FOR OM 457 LA	1	067290.0	1442228
2	FAN DRIVE FOR OM 460 LA	1	142232.0	1442253
3	CORN CRACKER DRIVE	1	076403.1	1470339
3	CORN CRACKER DRIVE	1	067789.0	1499333
4	CHOPPER DRIVE	1	984885.1	1424202
4	CHOPPER DRIVE	1	987883.0	1425204

JAGUAR 860

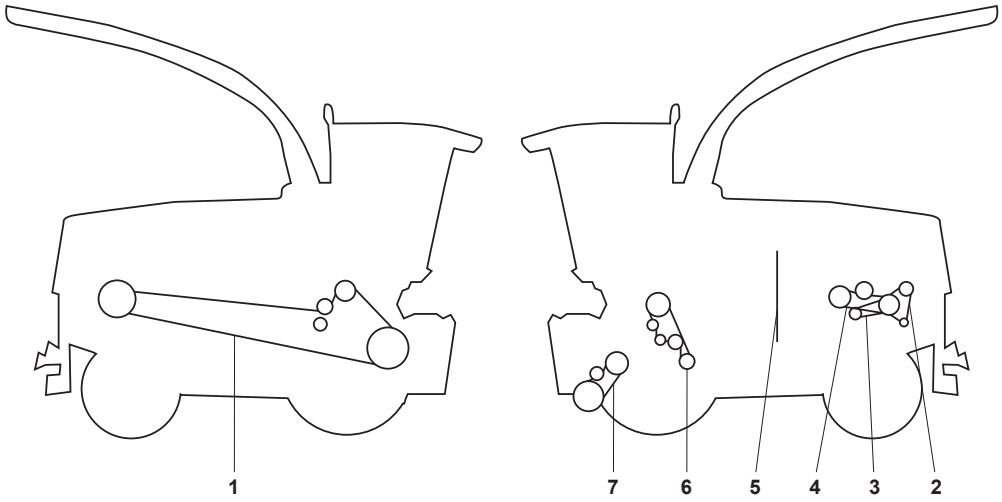

			OE	
1	MAIN DRIVE	1	076401.0	1499855
1	MAIN DRIVE	1	077796.0	1449760
2	GENERATOR	1	512087.0	0172253
3	COMPRESSOR	1	052393.1	1400115
4	AIR FAN	2	742206.0	1401164
4	AIR FAN	1	077400.0	0101168
5	CLEANING FAN DRIVE	1	077276.0	1400290
6	CORN CRACKER DRIVE	1	076403.1	1470339
7		1	984885.0	1424202

JAGUAR 870

			OE	
1	MAIN DRIVE	1	067746.0	1449787
2	FAN DRIVE FOR OM 502 LA	1	067289.0	1442293
2	FAN DRIVE FOR OM 457 LA	1	067290.0	1442228
2	FAN DRIVE FOR OM 460 LA	1	142232.0	1442253
3	CORN CRACKER DRIVE	1	076403.1	1470339
3	CORN CRACKER DRIVE	1	067789.0	1499333
4	CHOPPER DRIVE	1	984885.1	1424202
4	CHOPPER DRIVE	1	987883.0	1425204

JAGUAR 880

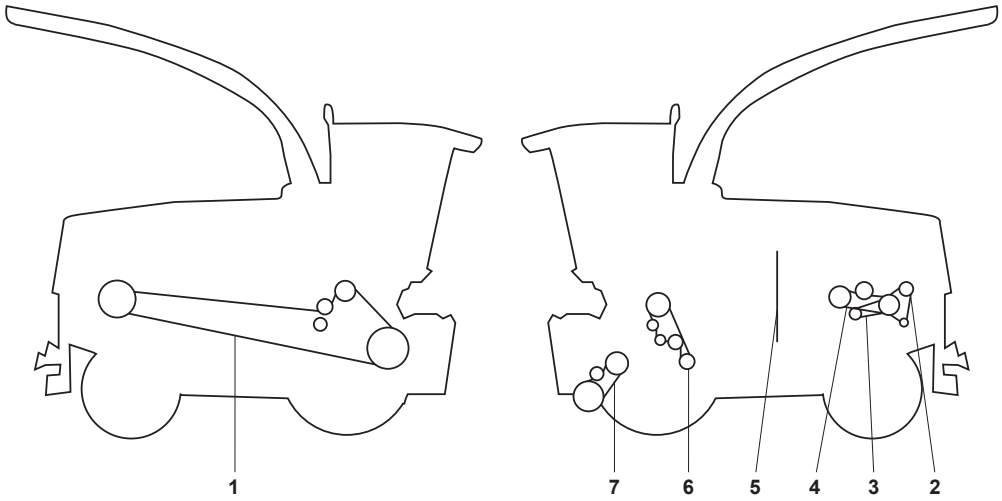

			OE	
1	MAIN DRIVE	1	076401.0	1499855
1	MAIN DRIVE	1	077796.0	1449760
2	GENERATOR	1	512087.0	0172253
3	COMPRESSOR	1	052393.1	1400115
4	AIR FAN	2	742206.0	1401164
4	AIR FAN	1	077400.0	0101168
5	CLEANING FAN DRIVE	1	077276.0	1400290
6	CORN CRACKER DRIVE	1	076403.1	1470339
7		1	984885.0	1424202

JAGUAR 890

			OE	
1	MAIN DRIVE	1	067747.1	1499787
2	FAN DRIVE FOR OM 502 LA	1	067289.0	1442293
2	FAN DRIVE FOR OM 457 LA	1	067290.0	1442228
2	FAN DRIVE FOR OM 460 LA	1	142232.0	1442253
3	CORN CRACKER DRIVE	1	076403.1	1470339
3	CORN CRACKER DRIVE	1	067789.0	1499333
4	CHOPPER DRIVE	1	984885.1	1424202
4	CHOPPER DRIVE	1	987883.0	1425204

JAGUAR 900

			OE	
1	MAIN DRIVE	1	067747.1	1499787
2	FAN DRIVE FOR OM 502 LA	1	067289.0	1442293
2	FAN DRIVE FOR OM 457 LA	1	067290.0	1442228
2	FAN DRIVE FOR OM 460 LA	1	142232.0	1442253
3	CORN CRACKER DRIVE	1	076403.1	1470339
3	CORN CRACKER DRIVE	1	067789.0	1499333
4	CHOPPER DRIVE	1	984885.1	1424202
4	CHOPPER DRIVE	1	987883.0	1425204

JAGUAR 950

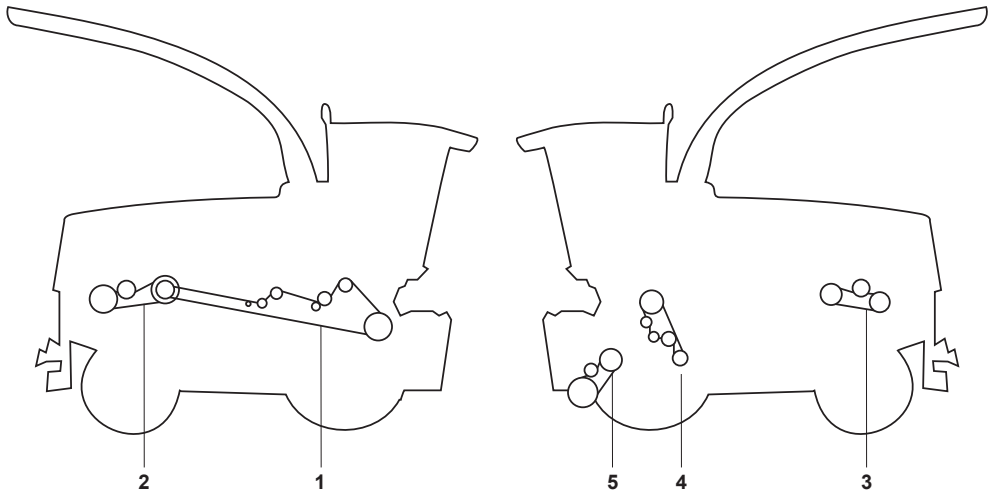

			OE	
1		1	090266.0	1449856
1		1	090267.0	1474897
1		1	140756.0	1484870
2		1	140755.0	1426253
3		1	742026.1	1601218
3		1	140765.0	1401254
4		1	090255.0	1499349
4		1	090256.1	1499413
5		1	629769.1	1423207

JAGUAR 980

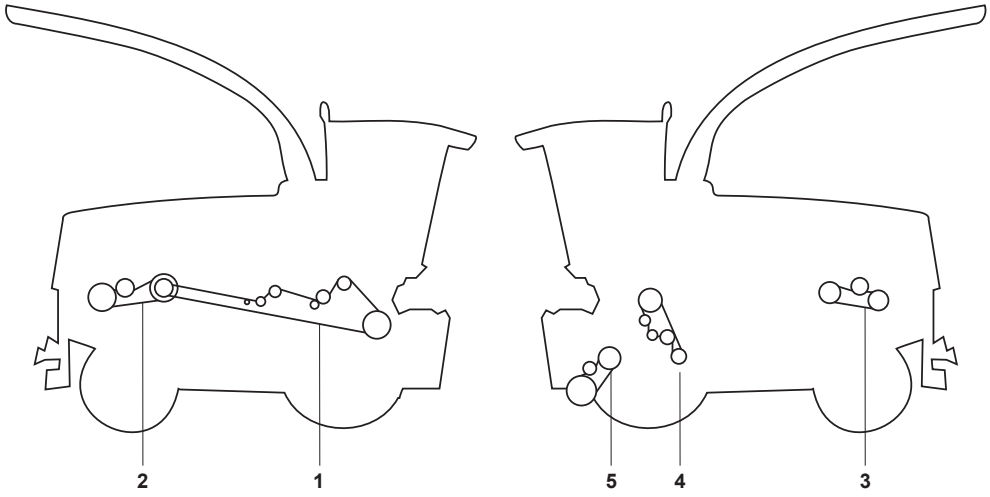

			OE	
1		1	090266.0	1449856
1		1	090267.0	1474897
1		1	140756.0	1484870
2		1	140755.0	1426253
3		1	742026.1	1601218
3		1	140765.0	1401254
4		1	090255.0	1499349
4		1	090256.1	1499413
5		1	629769.1	1423207

LEXION 410 - 405

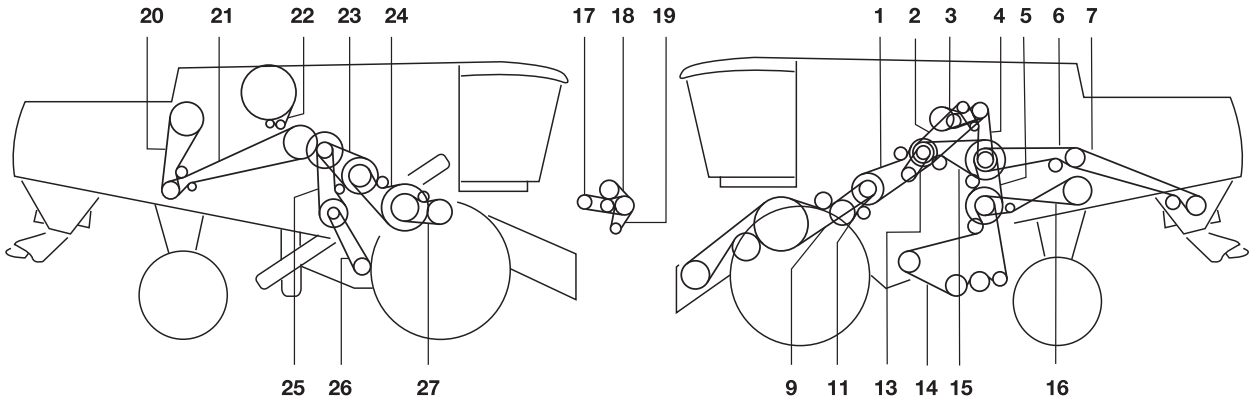

			OE	
0	THRESHING DRUM VARIATOR DRIVE	1	667248.0	1453293
0	KNIFE DRIVE	1	742025.0	0502215
0	REEL DRIVE VARIABLE SPEED	1	670244.1	1462186
1	CUTTERBAR DRIVE	1	667947.0	0323281
2	THRESHING MACHINE	1	667680.0	0225286 EE-TECH
3	DISCHARGE DRIVE GRAIN TANK	1	667681.0	0223204
4	STRAW CHOPPER DRIVE - 1ST STAGE	1	667981.2	1423211
5	SIEVE PAN DRIVE - 2ND STAGE	1	667252.0	1423240
6	STRAW CHOPPER DRIVE - 2ND STAGE	1	667683.1	1402291
7	STRAW CHOPPER DRIVE - 2ND STAGE	1	644771.0	0202305
9	CUTTERBAR DRIVE	2	667454.1	1402549
11	IMPELLER DRUM DRIVE	1	667249.0	1423196
13	HYDRAULIC PUMP DRIVE	1	758719.0	1401122
14	SIEVE PAN DRIVE 2RD STAGE	1	667651.1	0423458
15	SIEVE PAN DRIVE - 1ST STAGE	1	644209.2	0102250
16	STRAW WALKER DRIVE	1	667477.0	0101311
17	COMPRESSOR DRIVE	1	667560.1	1472264
18	ROTARY SCREEN FAN AND DRIVE	1	667242.0	1401113
19	ALTERNATOR DRIVE STARTER	1	667673.0	1472227
20	AGITATOR DRIVE (REAR)	1	667973.0	1401234
21	AGITATOR DRIVE (FRONT)	1	667974.0	1401384
22	ROTARY SCREEN DRIVE	1	667561.1	1400234
23	THRESHING DRUM VARIATOR DRIVE	1	661427.0	1499369
24	THRESHING CYLINDER	1	667934.0	1423301 EE-TECH
25	FAN DRIVE - 1ST STAGE	1	667957.0	1401208
26	FAN INTERMEDIATE DRIVE	1	667457.0	1410203
27	THRESHING DRUM VARIATOR DRIVE	1	667251.1	1423224

LEXION 410 II

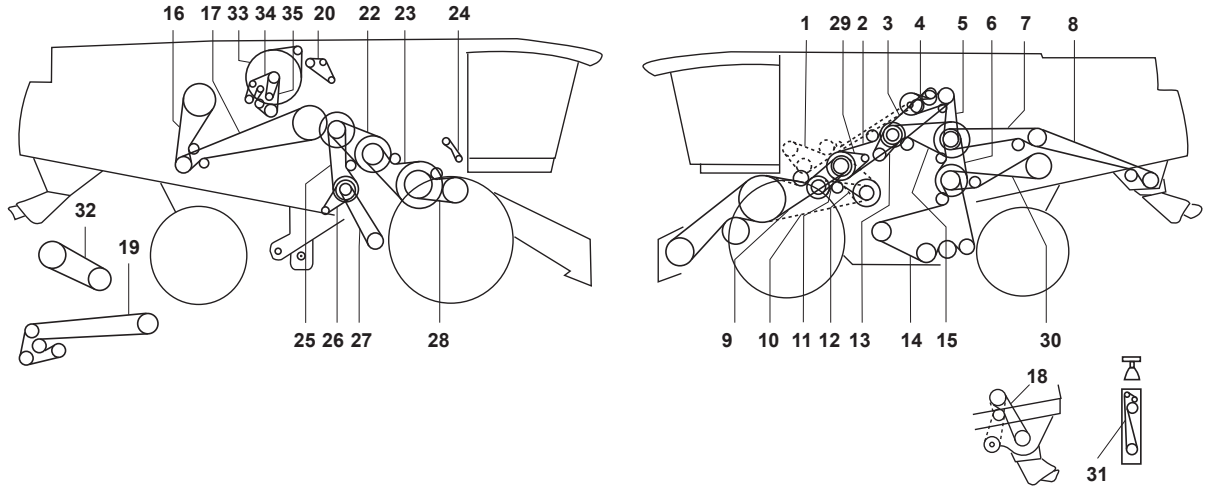

			OE	
1	GRAIN TANK UNLOADING	1	755537.0	Chain
1	EXTRA WEAR - PROOF	1	758711.0	Chain
2	CUTTERBAR DRIVE, 1STE STAGE	1	667255.1	1424282
3	THRESHING MECHANISM DRIVE	1	352371.1	1425292
4	GRAIN TANK UNLOADING	1	667250.0	1423210
5	CHOPPER DRIVE 1STE STAGE	1	667958.3	1423216
6	SIEVE PAN, 2ND STAGE	1	667252.0	1423240
7	CHOPPER DRIVE, 2ND STAGE	1	667683.1	1402291
8	CHOPPER DRIVE, 3RD STAGE ADJUSTABLE CHOPPER	1	667683.1	1402291
8	CHOPPER DRIVE, 3RD STAGE RIGID CHOPPER	1	061701.2	1402358
9	CUTTERBAR DRIVE, 2ND STAGE WITHOUT VARIABLE SPEED DRIVE	2	667454.1	1402549
10	CUTTERBAR DRIVE, 2ND STAGE WITH VARIABLE SPEED DRIVE	2	667551.2	1402587
11	SYNCHRONOUS DRIVE	1	667249.0	1423196
12	CUTTERBAR VARIATOR	1	667530.1	1463300
13	CHAFF SPREADER	1	758719.0	1401122
14	CLEANING, 3RD STAGE	1	667651.1	0423458
15	CLEANING, 1ST STAGE	1	644209.2	0102250
16	INTENSIVE SEPARATION SYSTEM, SHORT	1	667973.0	1401234
17	INTENSIVE SEPARATION SYSTEM, LONG	1	667974.0	1401384
18	CHOPPER DRIVE, 4TH STAGE	1	667684.0	0202172
19	FINGER ROLLER	1	509035.1	1501475
20	GRAIN ELEVATOR	1	754315.1	Chain
22	LEXION 410	1	661427.0	1499369
23	LEXION 410	1	644902.0	1423292
24	RETURNS ELEVATOR	1	642492.0	Chain
25	LEXION 410	1	667957.0	1401208
26	LEXION 410	1	644843.0	1400115
27	FAN VARIATOR	1	667457.0	1410203
28	PRE - DRUM DRIVE	1	667251.1	1423224
29	HYDRAULIC REEL DRIVE	1	829094.0	1401137
30	STRAW WALKER DRIVE	1	667477.0	0101311
31	STRAW SPREADER	1	539443.0	1499395
32	DRUM VARIATOR 2ND STAGE	1	667248.0	1453293
33	RADIATOR SCREEN 2ND STAGE	1	545689.0	0300225
34	ENGINE 3126 B	1	796475.0	0285329
35	FAN DRIVE	1	796450.0	0242166

LEXION 420 MONTANA

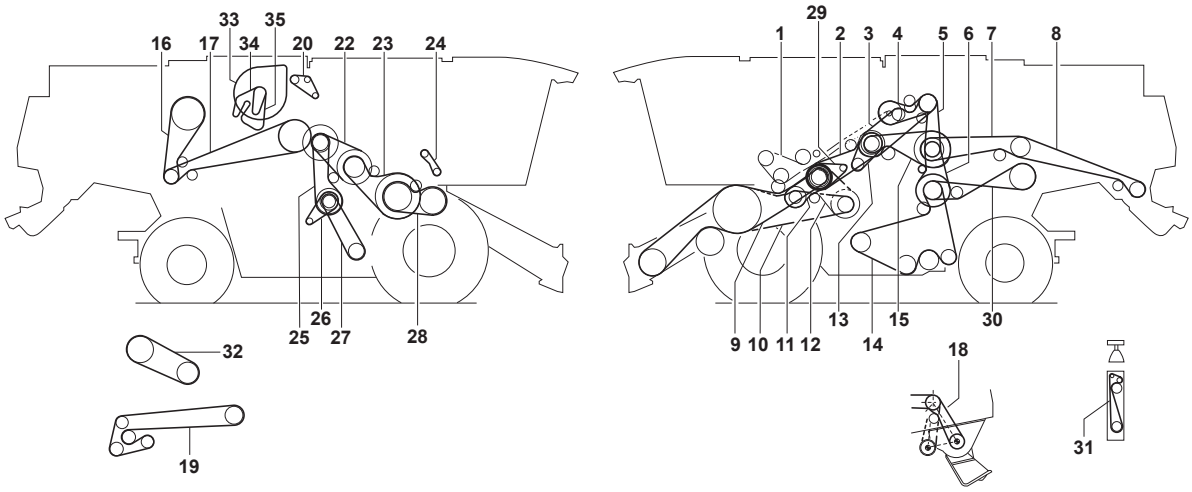

1	GRAIN TANK UNLOADING	1	755537.0	Chain
1	EXTRA WEAR - PROOF	1	758711.0	Chain
2	CUTTERBAR DRIVE, 1STE STAGE	1	667255.1	1424282
3	THRESHING MECHANISM DRIVE	1	352371.1	1425292
4	GRAIN TANK UNLOADING	1	667250.0	1423210
5	CHOPPER DRIVE, 1STE STAGE	1	667958.3	1423216
6	SIEVE PAN, 2ND STAGE	1	667252.0	1423240
7	CHOPPER DRIVE, 2ND STAGE	1	667683.1	1402291
8	CHOPPER DRIVE, 3RD STAGE ADJUSTABLE CHOPPER	1	667683.1	1402291
9	CUTTERBAR DRIVE, 2ND STAGE WITHOUT VARIABLE SPEED DRIVE	2	667454.1	1402549
10	CUTTERBAR DRIVE, 3RD STAGE WITH VARIABLE SPEED DRIVE	2	667551.2	1402587
11	SYNCHRONOUS DRIVE	1	667249.0	1423196
12	CUTTERBAR VARIATOR	1	667530.1	1463300
13	CHAFF SPREADER	1	758719.0	1401122
14	CLEANING, 3RD STAGE	1	667651.1	0423458
15	CLEANING, 1STE STAGE	1	644209.2	0102250
16	INTENSIVE SEPARATION SYSTEM, SHORT	1	667973.0	1401234
17	INTENSIVE SEPARATION SYSTEM, LONG	1	667974.0	1401384
18	CHOPPER DRIVE, 4TH STAGE	1	667684.0	0202172
19	FINGER ROLLER	1	509035.1	1501475
20	GRAIN ELEVATOR	1	754315.1	Chain
22	DRUM VARIATOR	1	667248.0	1453293
23	DRUM DRIVE	1	176442.1	2124287
24	RETURNS ELEVATOR	1	642492.0	Chain
25	FAN DRIVE	1	742026.2	1601218
26	SUCTION FAN	1	644781.0	0200118
27	FAN VARIATOR	1	667457.0	1410203
28	PRE - DRUM DRIVE	1	667251.1	1423224
29	HYDRAULIC REEL DRIVE	1	829094.0	1401137
30	STRAW WALKER DRIVE	1	667477.0	0101311
31	STRAW SPREADER	1	539443.0	1499395
32	DRUM VARIATOR 2ND STAGE	1	667248.0	1453293
33	RADIATOR SCREEN 2ND STAGE	1	545689.0	0300225
34	ENGINE 3126 B	1	796475.0	0285329
35	FAN DRIVE	1	796450.0	0242166

LEXION 430 - 415

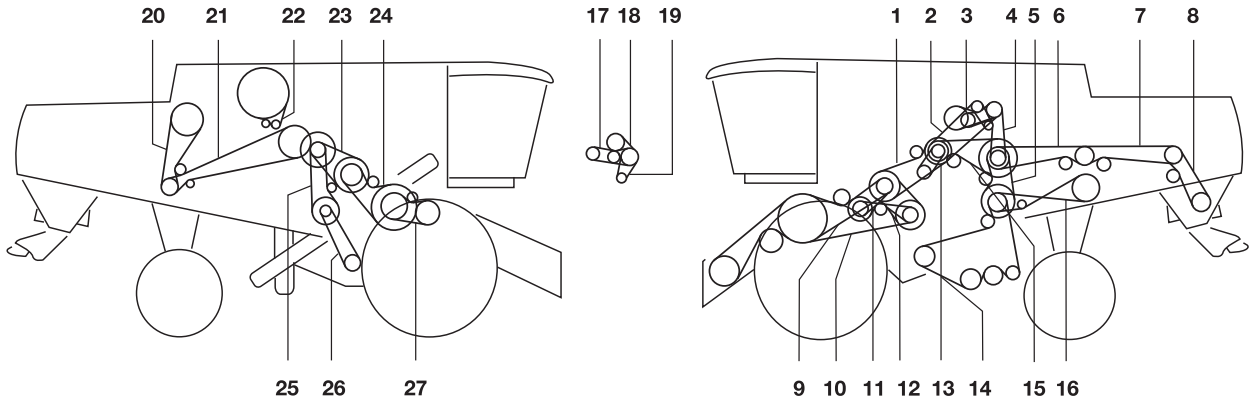

			OE	
0	STRAW SPREADER DRIVE	1	539433.0	☎
0	ROTARY SCREEN DRIVE	1	667456.0	0372231
0	KNIFE DRIVE	1	742025.0	0502215
0	REEL DRIVE VARIABLE SPEED	1	670244.1	1462186
1	CLUTCH FOR CUTTERBAR DRIVE	1	667255.1	1424282
2	THRESHING MECHANICAL DRIVE	1	667680.0	0225286 EE-TECH
3	DISCHARGE DRIVE GRAIN TANK	1	667681.0	0223204
4	STRAW CHOPPER DRIVE - 1ST STAGE	1	667981.2	1423211
5	SIEVE PAN DRIVE - 2ND STAGE	1	667252.0	1423240
6	STRAW CHOPPER DRIVE - 2ND STAGE	1	667633.0	☎
7	STRAW CHOPPER DRIVE - 2ND STAGE	1	667683.1	1402291
8	STRAW CHOPPER DRIVE - 4TH STAGE	1	667684.0	0202172
9	CUTTERBAR DRIVE WITHOUT VARIATOR DRIVE	2	667454.1	1402549
10	CUTTERBAR DRIVE WITHOUT VARIATOR DRIVE	2	667551.2	1402587
11	IMPELLER DRUM DRIVE	1	667249.0	1423196
12	CUTTERBAR DRIVE WITH VARIABLE SPEED DRIVE	1	667530.1	1463300
13	HYDRAULIC PUMP DRIVE	1	758719.0	1401122
14	SIEVE PAN DRIVE 2RD STAGE	1	667651.1	0423458
15	SIEVE PAN DRIVE - 1ST STAGE	1	644209.2	0102250
16	STRAW WALKER DRIVE	1	667477.0	0101311
17	COMPRESSOR DRIVE	1	667560.1	1472264
18	ROTARY SCREEN FAN AND DRIVE	1	667242.0	1401113
19	ALTERNATOR DRIVE STARTER	1	667673.0	1472227
20	AGITATOR DRIVE (REAR)	1	667973.0	1401234
21	AGITATOR DRIVE (FRONT)	1	667974.0	1401384
22	ROTARY SCREEN DRIVE	1	667561.1	1400234
23	THRESHING DRUM VARIATOR DRIVE	1	667248.0	1453293
24	THRESHING DRUM VARIATOR DRIVE	1	667458.0	1424296
25	FAN DRIVE - 1ST STAGE	1	742026.2	1601218
26	FAN DRIVE - 1ST STAGE	1	667457.0	1410203
27	SPEED REDUCING GEAR BOX	1	667251.1	1423224

LEXION 430 II

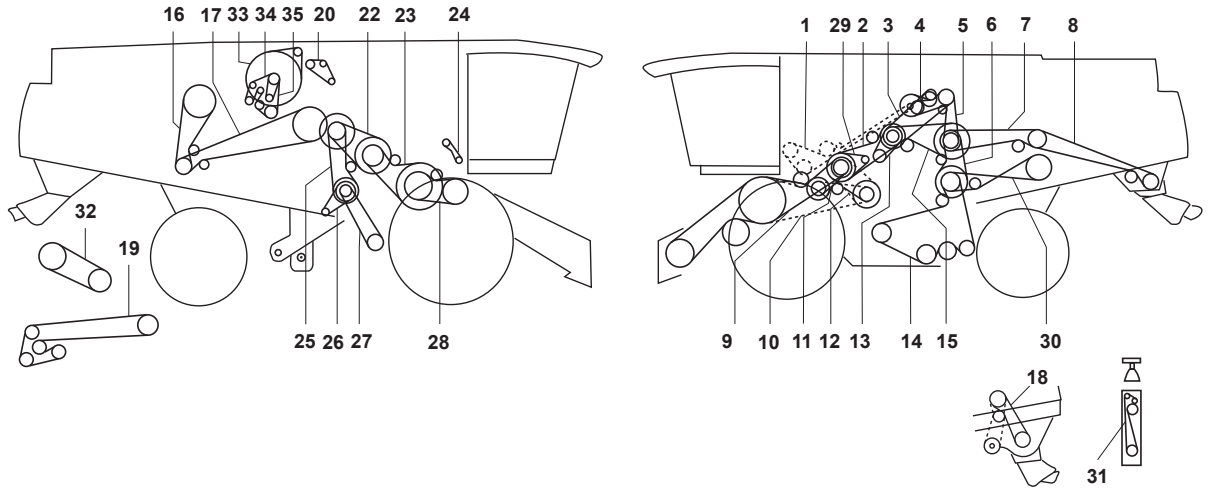

1	GRAIN TANK UNLOADING	1	755537.0	Chain
1	EXTRA WEAR - PROOF	1	758711.0	Chain
2	CUTTERBAR DRIVE, 1STE STAGE	1	667255.1	1424282
3	THRESHING MECHANISM DRIVE	1	352371.1	1425292
4	GRAIN TANK UNLOADING	1	667250.0	1423210
5	CHOPPER DRIVE 1STE STAGE	1	667958.3	1423216
6	SIEVE PAN, 2ND STAGE	1	667252.0	1423240
7	CHOPPER DRIVE, 2ND STAGE	1	667683.1	1402291
8	CHOPPER DRIVE, 3RD STAGE ADJUSTABLE CHOPPER	1	667683.1	1402291
8	CHOPPER DRIVE, 3RD STAGE RIGID CHOPPER	1	061701.2	1402358
9	CUTTERBAR DRIVE, 2ND STAGE WITHOUT VARIABLE SPEED DRIVE	2	667454.1	1402549
10	CUTTERBAR DRIVE, 2ND STAGE WITH VARIABLE SPEED DRIVE	2	667551.2	1402587
11	SYNCHRONOUS DRIVE	1	667249.0	1423196
12	CUTTERBAR VARIATOR	1	667530.1	1463300
13	CHAFF SPREADER	1	758719.0	1401122
14	CLEANING, 3RD STAGE	1	667651.1	0423458
15	CLEANING, 1ST STAGE	1	644209.2	0102250
16	INTENSIVE SEPARATION SYSTEM, SHORT	1	667973.0	1401234
17	INTENSIVE SEPARATION SYSTEM, LONG	1	667974.0	1401384
18	CHOPPER DRIVE, 4TH STAGE	1	667684.0	0202172
19	FINGER ROLLER	1	509035.1	1501475
20	GRAIN ELEVATOR	1	754315.1	Chain
22	DRUM VARIATOR	1	667248.0	1453293
23	DRUM DRIVE	1	176442.1	2124287
24	RETURNS ELEVATOR	1	642492.0	Chain
25	FAN DRIVE	1	742026.2	1601218
26	SUCTION BLOWER LEXION 430, 420	1	644781.0	0200118
27	FAN VARIATOR	1	667457.0	1410203
28	PRE - DRUM DRIVE	1	667251.1	1423224
29	HYDRAULIC REEL DRIVE	1	829094.0	1401137
30	STRAW WALKER DRIVE	1	667477.0	0101311
31	STRAW SPREADER	1	539443.0	1499395
32	DRUM VARIATOR 2ND STAGE	1	667248.0	1453293
33	RADIATOR SCREEN 2ND STAGE	1	545689.0	0300225
34	ENGINE 3126 B	1	796475.0	0285329
35	FAN DRIVE	1	796450.0	0242166

LEXION 430 MONTANA

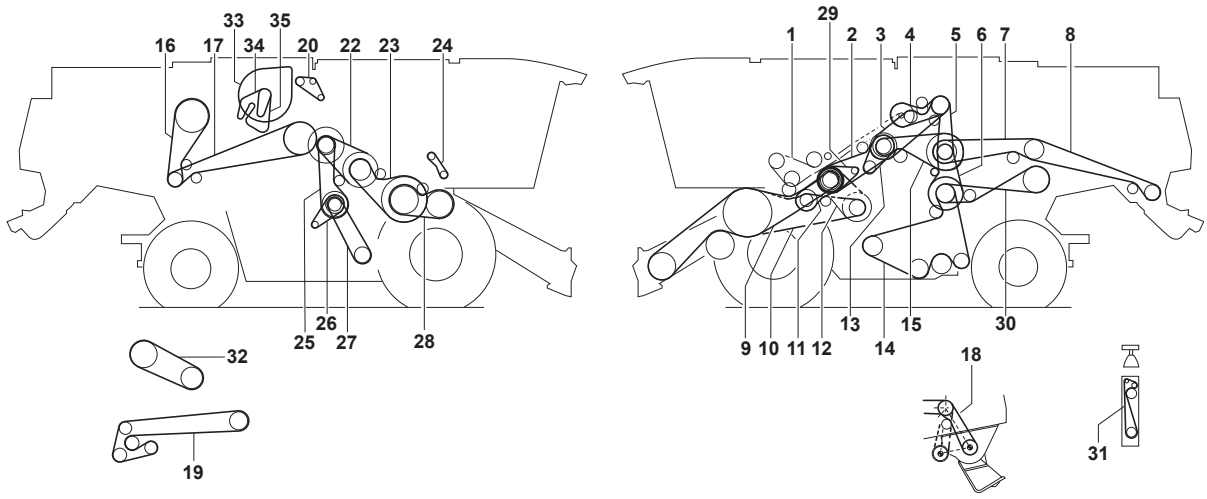

1	GRAIN TANK UNLOADING	1	755537.0	Chain
1	EXTRA WEAR - PROOF	1	758711.0	Chain
2	CUTTERBAR DRIVE, 1STE STAGE	1	667255.1	1424282
3	THRESHING MECHANISM DRIVE	1	352371.1	1425292
4	GRAIN TANK UNLOADING	1	667250.0	1423210
5	CHOPPER DRIVE, 1STE STAGE	1	667958.3	1423216
6	SIEVE PAN, 2ND STAGE	1	667252.0	1423240
7	CHOPPER DRIVE, 2ND STAGE	1	667683.1	1402291
8	CHOPPER DRIVE, 3RD STAGE ADJUSTABLE CHOPPER	1	667683.1	1402291
9	CUTTERBAR DRIVE, 2ND STAGE WITHOUT VARIABLE SPEED DRIVE	2	667454.1	1402549
10	CUTTERBAR DRIVE, 3RD STAGE WITH VARIABLE SPEED DRIVE	2	667551.2	1402587
11	SYNCHRONOUS DRIVE	1	667249.0	1423196
12	CUTTERBAR VARIATOR	1	667530.1	1463300
13	CHAFF SPREADER	1	758719.0	1401122
14	CLEANING, 3RD STAGE	1	667651.1	0423458
15	CLEANING, 1STE STAGE	1	644209.2	0102250
16	INTENSIVE SEPARATION SYSTEM, SHORT	1	667973.0	1401234
17	INTENSIVE SEPARATION SYSTEM, LONG	1	667974.0	1401384
18	CHOPPER DRIVE, 4TH STAGE	1	667684.0	0202172
19	FINGER ROLLER	1	509035.1	1501475
20	GRAIN ELEVATOR	1	754315.1	Chain
22	DRUM VARIATOR	1	667248.0	1453293
23	DRUM DRIVE	1	176442.1	2124287
24	RETURNS ELEVATOR	1	642492.0	Chain
25	FAN DRIVE	1	742026.2	1601218
26	SUCTION FAN	1	644781.0	0200118
27	FAN VARIATOR	1	667457.0	1410203
28	PRE - DRUM DRIVE	1	667251.1	1423224
29	HYDRAULIC REEL DRIVE	1	829094.0	1401137
30	STRAW WALKER DRIVE	1	667477.0	0101311
31	STRAW SPREADER	1	539443.0	1499395
32	DRUM VARIATOR 2ND STAGE	1	667248.0	1453293
33	RADIATOR SCREEN 2ND STAGE	1	545689.0	0300225
34	ENGINE 3126 B	1	796475.0	0285329
35	FAN DRIVE	1	796450.0	0242166

LEXION 440 II

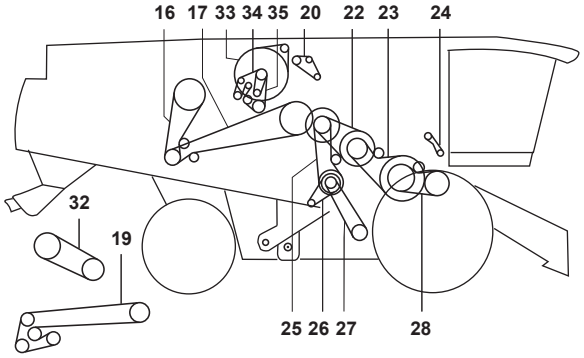

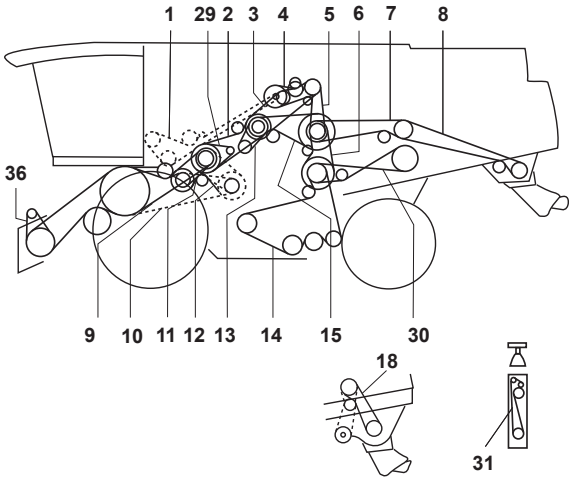

1	GRAIN TANK UNLOADING	1	755508.0	Chain
1	EXTRA WEAR - PROOF	1	758710.0	Chain
2	CUTTERBAR DRIVE, 1STE STAGE	1	667255.1	1424282
3	THRESHING MECHANISM DRIVE	1	667453.0	1426293
4	GRAIN TANK UNLOADING	1	667250.0	1423210
5	CHOPPER DRIVE 1STE STAGE	1	667958.3	1423216
6	SIEVE PAN, 2ND STAGE	1	667252.0	1423240
7	CHOPPER DRIVE, 2ND STAGE	1	061700.1	1423319
8	CHOPPER DRIVE, 3RD STAGE ADJUSTABLE CHOPPER	1	061700.1	1423319
8	CHOPPER DRIVE, 3RD STAGE RIGID CHOPPER FROM NO. 54402246	1	749828.0	1423394
8	NO. 54401896 - 54402245	1	628888.0	1423400
8	TO NO. 54401895	1	749828.0	1423394
9	CUTTERBAR DRIVE, 2ND STAGE WITHOUT VARIABLE SPEED DRIVE	2	667454.1	1402549
10	CUTTERBAR DRIVE, 3RD STAGE WITH VARIABLE SPEED DRIVE	2	667551.2	1402587
11	SYNCHRONOUS DRIVE	1	667249.0	1423196
12	CUTTERBAR VARIATOR	1	667530.1	1463300
13	CHAFF SPREADER	1	758719.0	1401122
14	CLEANING, 3RD STAGE	1	667651.1	0423458
15	CLEANING, 1ST STAGE	1	644209.2	0102250
16	INTENSIVE SEPARATION SYSTEM, SHORT	1	667973.0	1401234
17	INTENSIVE SEPARATION SYSTEM, LONG	1	667974.0	1401384
18	CHOPPER DRIVE, 4TH STAGE	1	661093.1	1423202
19	FINGER ROLLER	1	509035.1	1501475
20	GRAIN ELEVATOR	1	754315.1	Chain
22	DRUM VARIATOR	1	667248.0	1453293
23	DRUM DRIVE	1	176442.1	2124287
24	RETURNS ELEVATOR	1	642492.0	Chain
25	FAN DRIVE	1	742026.2	1601218
26	SUCTION FAN	1	644781.0	0200118
27	FAN VARIATOR	1	667457.0	1410203
28	PRE - DRUM DRIVE	1	667251.1	1423224
29	HYDRAULIC REEL DRIVE	1	829094.0	1401137
30	STRAW WALKER DRIVE	1	667477.0	0101311

LEXION 440 II (CONTINUED)

			OE	
31	STRAW SPREADER	1	539443.0	1499395
32	DRUM VARIATOR 2ND STAGE	1	667248.0	1453293
33	RADIATOR SCREEN 2ND STAGE	1	545689.0	0300225
34	ENGINE C9	1	796474.0	0385331
34	ENGINE 3126 B	1	796475.0	0285329
35	FAN DRIVE	1	796450.0	0242166
36	SUCTION BLOWER E - CHANNEL	1	765985.0	1900123

LEXION 450 II MTS

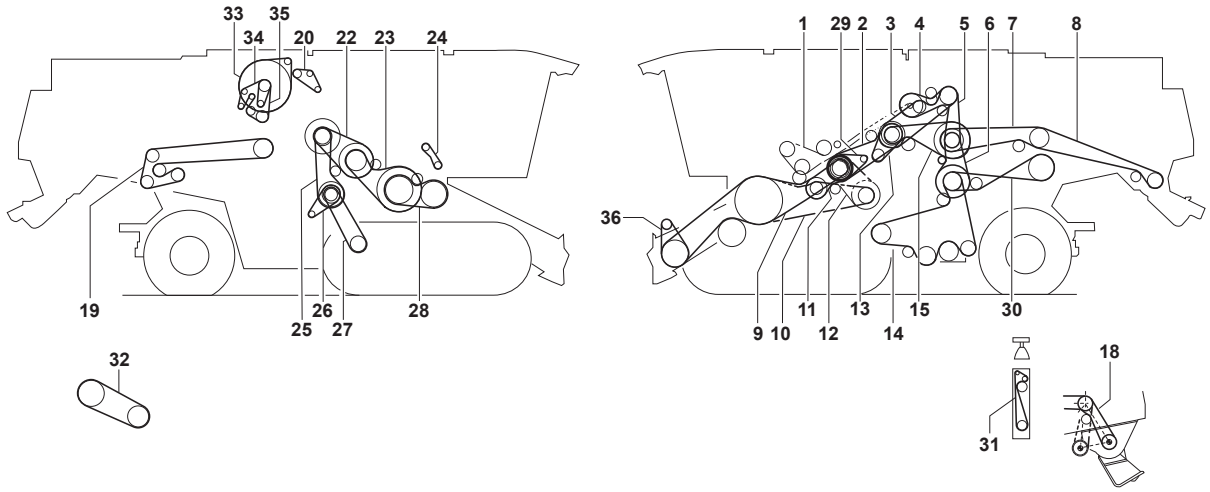

1	GRAIN TANK UNLOADING	1	755508.0	Chain
1	EXTRA WEAR - PROOF	1	758710.0	Chain
2	CUTTERBAR DRIVE, 1STE STAGE	1	667255.1	1424282
3	THRESHING MECHANISM DRIVE	1	352403.0	1426293
4	GRAIN TANK UNLOADING	1	667250.0	1423210
5	CHOPPER DRIVE 1STE STAGE	1	667958.3	1423216
6	SIEVE PAN 2ND STAGE	1	667252.0	1423240
7	CHOPPER DRIVE, 2ND STAGE	1	061700.1	1423319
8	CHOPPER DRIVE, 3RD STAGE ADJUSTABLE CHOPPER	1	061700.1	1423319
8	CHOPPER DRIVE, 3RD STAGE RIGID CHOPPER FROM NO. 54700050	1	749828.0	1423394
8	NO. 54700041 - 54700049	1	628888.0	1423400
8	TO NO. 54700040	1	749828.0	1423394
9	CUTTERBAR DRIVE, 2ND STAGE WITHOUT VARIABLE SPEED DRIVE	2	667454.1	1402549
10	CUTTERBAR DRIVE, 3RD STAGE WITH VARIABLE SPEED DRIVE	2	667551.2	1402587
11	SYNCHRONOUS DRIVE	1	667249.0	1423196
12	CUTTERBAR VARIATOR	1	667530.1	1463300
13	CHAFF SPREADER	1	758719.0	1401122
14	CLEANING, 3RD STAGE	1	667651.1	0423458
15	CLEANING, 1STE STAGE	1	644209.2	0102250
18	CHOPPER DRIVE, 4TH STAGE	1	661093.1	1423202
19	FINGER ROLLER	1	509035.1	1501475
20	GRAIN ELEVATOR	1	754315.1	Chain
22	DRUM VARIATOR	1	667248.0	1453293
23	DRUM DRIVE	1	176442.1	2124287
24	RETURNS ELEVATOR	1	642492.0	Chain
25	FAN DRIVE	1	742026.2	1601218
26	SUCTION FAN	1	644781.0	0200118
27	FAN VARIATOR	1	667457.0	1410203
28	PRE - DRUM DRIVE	1	667251.1	1423224
29	HYDRAULIC REEL DRIVE	1	829094.0	1401137
30	STRAW WALKER DRIVE	1	667477.0	0101311
31	STRAW SPREADER	1	539443.0	1499395
32	DRUM VARIATOR 2ND STAGE	1	667248.0	1453293
33	RADIATOR SCREEN 2ND STAGE	1	545689.0	0300225
34	ENGINE C9	1	796474.0	0385331
35	FAN DRIVE	1	796450.0	0242166
36	SUCTION BLOWER E - CHANNEL	1	765985.0	1900123

LEXION 450 TERRA

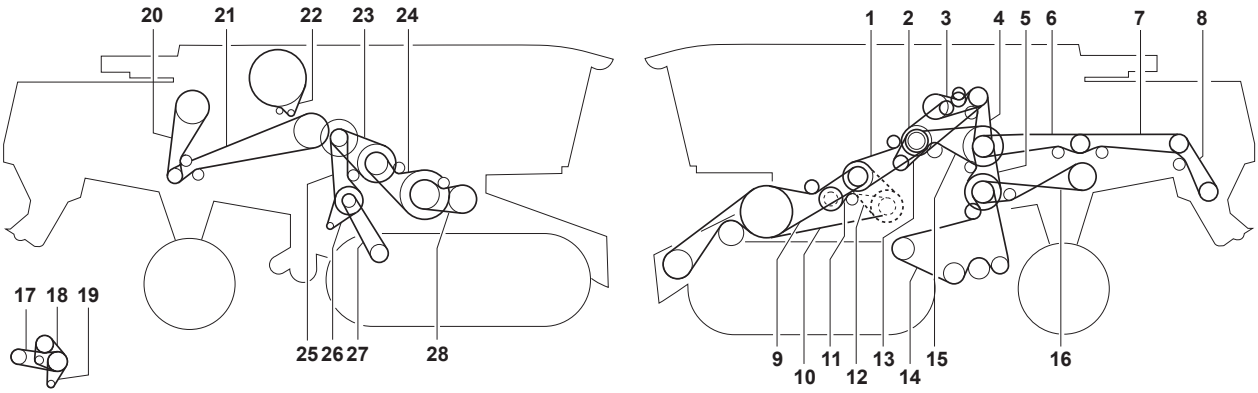

			OE	
1	1STE STAGE CUTTERBAR	1	667255.1	1424282
2	THRESHING MECHANISM	1	667453.0	1426293
3	GRAIN TANK UNLOADING	1	667250.0	1423210
4	1STE STAGE CHOPPER	1	667958.3	1423216
5	2ND STAGE CLEANING	1	667252.0	1423240
6	2ND STAGE CHOPPER	1	061700.1	1423319
7	3RD STAGE CHOPPER	1	061700.1	1423319
8	4TH STAGE CHOPPER	1	661093.1	1423202
9	2ND STAGE CUTTERBAR WITHOUT VARIABLE SPEED	2	667454.1	1402549
10	3RD STAGE CUTTERBAR WITH VARIABLE SPEED	2	667551.2	1402587
11	IMPELLER DRUM	1	667249.0	1423196
12	CUTTERBAR VARIABLE SPEED	1	667530.1	1463300
13	HYDRAULIC PUMP	1	758719.0	1401122
14	3RD STAGE CLEANING	1	667651.1	0423458
15	1STE STAGE CLEANING	1	644209.2	0102250
16	STRAW WALKER	1	667477.0	0101311
17	COMPRESSOR	1	667560.1	1472264
18	MOTOR FAN	1	667242.0	1401113
19	1STE STAGE RADIATOR SCREEN	1	667456.0	0372231
20	REAR FEED RAKE	1	667973.0	1401234
21	FRONT FEED RAKE	1	667974.0	1401384
22	2ND STAGE RADIATOR SCREEN	1	667561.1	1400234
23	DRUM VARIABLE SPEED DRIVE	1	667248.0	1453293
24	THRESHING DRUM FROM NO. 45800017	1	176442.1	2124287
24	THRESHING DRUM TO NO. 45700016	1	667458.0	1424296
24	THRESHING DRUM AT DISC D 593 MM OPTIONAL	1	667255.1	1424282
25	1STE STAGE BLOWER	1	742026.2	1601218
26	FAN VARIABLE SPEED DRIVE	1	667457.0	1410203
27	ACCELERATOR	1	667251.1	1423224
28	SUCTION FAN	1	644781.0	0200118

LEXION 460 - 440

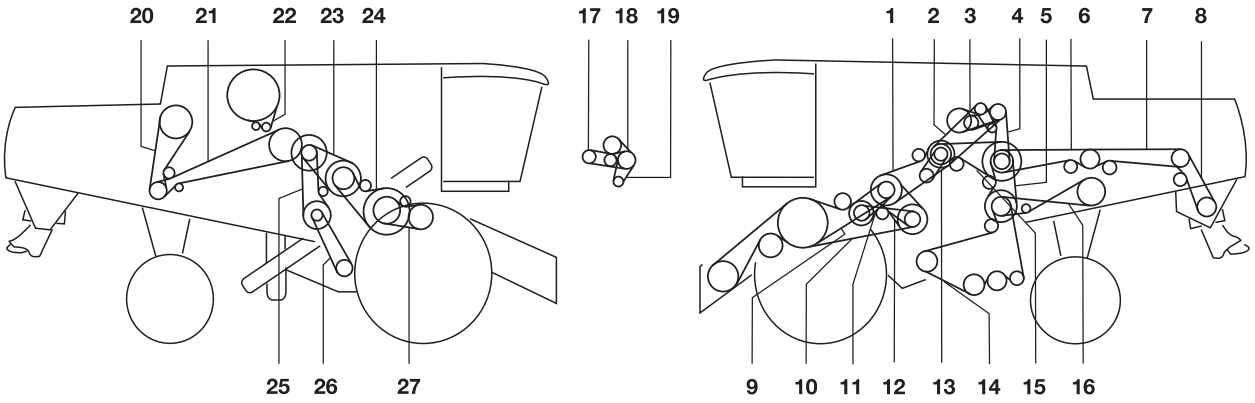

			OE	
0	REEL DRIVE VARIABLE SPEED	1	670244.1	1462186
0	KNIFE DRIVE	1	742025.0	0502215
1	CLUTCH FOR CUTTERBAR DRIVE	1	667255.1	1424282
2	THRESHING MECHANISM DRIVE	1	667453.0	1426293
3	DISCHARGE DRIVE GRAIN TANK	1	667250.0	1423210
4	STRAW CHOPPER DRIVE - 1ST STAGE	1	667958.3	1423216
5	SIEVE PAN DRIVE - 2ND STAGE	1	667252.0	1423240
6	STRAW CHOPPER DRIVE - 2ND STAGE	1	061700.1	1423319
7	STRAW CHOPPER DRIVE - 2ND STAGE	1	061700.1	1423319
8	STRAW CHOPPER DRIVE - 4TH STAGE	1	661093.1	1423202
9	CUTTERBAR DRIVE WITHOUT VARIATOR DRIVE	2	667454.1	1402549
10	CUTTERBAR DRIVE WITH VARIABLE SPEED DRIVE	2	667551.2	1402587
11	IMPELLER DRUM DRIVE	1	667249.0	1423196
12	CUTTERBAR DRIVE WITH VARIABLE SPEED DRIVE	1	667530.1	1463300
13	HYDRAULIC PUMP DRIVE	1	758719.0	1401122
14	SIEVE PAN DRIVE 2RD STAGE	1	667651.1	0423458
15	SIEVE PAN DRIVE - 1ST STAGE	1	644209.2	0102250
16	STRAW WALKER DRIVE	1	667477.0	0101311
17	COMPRESSOR DRIVE	1	667560.1	1472264
18	ROTARY SCREEN FAN AND DRIVE	1	667242.0	1401113
19	ROTARY SCREEN DRIVE	1	667456.0	0372231
20	AGITATOR DRIVE (REAR)	1	667973.0	1401234
21	AGITATOR DRIVE (FRONT)	1	667974.0	1401384
22	ROTARY SCREEN DRIVE	1	667561.1	1400234
23	THRESHING DRUM VARIATOR DRIVE	1	667248.0	1453293
24	THRESHING DRUM VARIATOR DRIVE	1	667458.0	1424296
25	FAN DRIVE - 1ST STAGE	1	742026.2	1601218
26	FAN INTERMEDIATE DRIVE	1	667457.0	1410203
27	SPEED REDUCING GEAR BOX	1	667251.1	1423224

LEXION 460 II

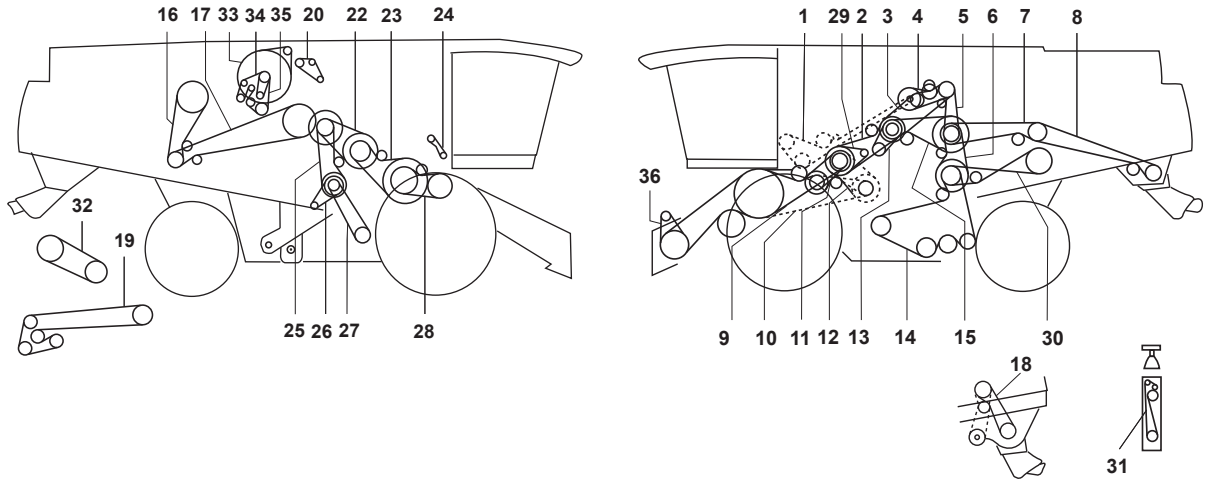

			OE	
1	GRAIN TANK UNLOADING	1	755508.0	Chain
1	EXTRA WEAR - PROOF	1	758710.0	Chain
2	CUTTERBAR DRIVE, 1STE STAGE	1	667255.1	1424282
3	THRESHING MECHANISM DRIVE	1	352403.0	1426293
4	GRAIN TANK UNLOADING	1	667250.0	1423210
5	CHOPPER DRIVE 1STE STAGE	1	667958.3	1423216
6	SIEVE PAN, 2ND STAGE	1	667252.0	1423240
7	CHOPPER DRIVE, 2ND STAGE	1	061700.1	1423319
8	CHOPPER DRIVE, 3RD STAGE ADJUSTABLE CHOPPER	1	061700.1	1423319
8	CHOPPER DRIVE, 3RD STAGE RIGID CHOPPER FROM NO. 54402246	1	749828.0	1423394
8	NO. 54401896 - 54402245	1	628888.0	1423400
8	TO NO. 54401895	1	749828.0	1423394
9	CUTTERBAR DRIVE, 2ND STAGE WITHOUT VARIABLE SPEED DRIVE	2	667454.1	1402549
10	CUTTERBAR DRIVE, 3RD STAGE WITH VARIABLE SPEED DRIVE	2	667551.2	1402587
11	SYNCHRONOUS DRIVE	1	667249.0	1423196
12	CUTTERBAR VARIATOR	1	667530.1	1463300
13	CHAFF SPREADER	1	758719.0	1401122
14	CLEANING, 3RD STAGE	1	667651.1	0423458
15	CLEANING, 1ST STAGE	1	644209.2	0102250
16	INTENSIVE SEPERATION SYSTEM, SHORT	1	667973.0	1401234
17	INTENSIVE SEPERATION SYSTEM, LONG	1	667974.0	1401384
18	CHOPPER DRIVE, 4TH STAGE	1	661093.1	1423202
19	FINGER ROLLER	1	509035.1	1501475
20	GRAIN ELEVATOR	1	754315.1	Chain
22	DRUM VARIATOR	1	667248.0	1453293
23	DRUM DRIVE	1	176442.1	2124287
24	RETURNS ELEVATOR	1	642492.0	Chain
25	FAN DRIVE	1	742026.2	1601218
26	SUCTION FAN	1	644781.0	0200118
27	FAN VARIATOR	1	667457.0	1410203
28	PRE - DRUM DRIVE	1	667251.1	1423224

LEXION 460 II (CONTINUED)

			OE	
29	HYDRAULIC REEL DRIVE	1	829094.0	1401137
30	STRAW WALKER DRIVE	1	667477.0	0101311
31	STRAW SPREADER	1	539443.0	1499395
32	DRUM VARIATOR 2ND STAGE	1	667248.0	1453293
33	RADIATOR SCREEN 2ND STAGE	1	545689.0	0300225
34	ENGINE C9	1	796474.0	0385331
34	ENGINE 3126 B	1	796475.0	0285329
35	FAN DRIVE	1	796450.0	0242166
36	SUCTION BLOWER E - CHANNEL	1	765985.0	1900123

LEXION 460 II MTS

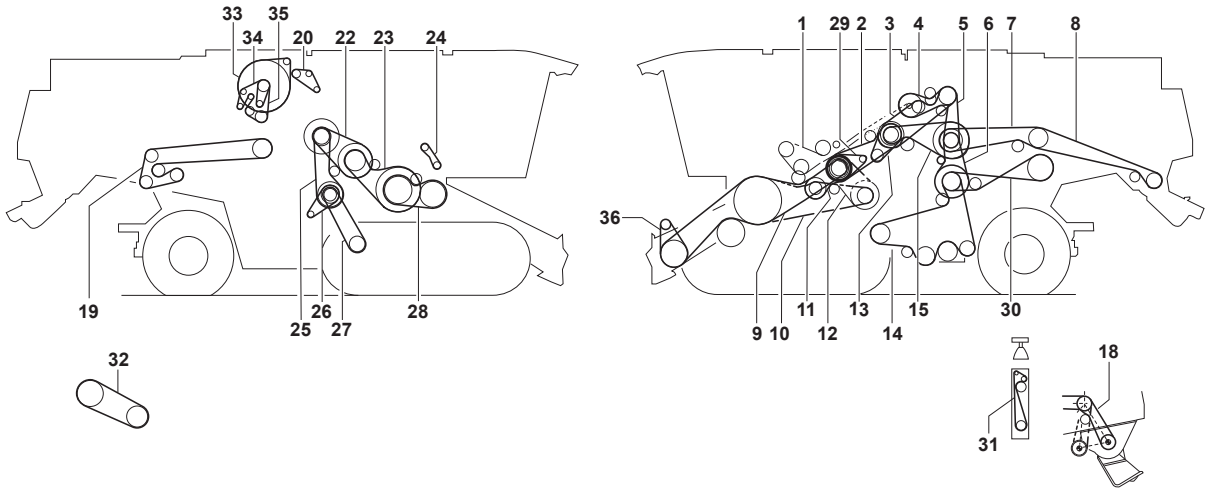

			OE	
1	GRAIN TANK UNLOADING	1	755508.0	Chain
1	EXTRA WEAR - PROOF	1	758710.0	Chain
2	CUTTERBAR DRIVE, 1STE STAGE	1	667255.1	1424282
3	THRESHING MECHANISM DRIVE	1	352403.0	1426293
4	GRAIN TANK UNLOADING	1	667250.0	1423210
5	CHOPPER DRIVE 1STE STAGE	1	667958.3	1423216
6	SIEVE PAN 2ND STAGE	1	667252.0	1423240
7	CHOPPER DRIVE, 2ND STAGE	1	061700.1	1423319
8	CHOPPER DRIVE, 3RD STAGE ADJUSTABLE CHOPPER	1	061700.1	1423319
8	CHOPPER DRIVE, 3RD STAGE RIGID CHOPPER FROM NO. 54700050	1	749828.0	1423394
8	NO. 54700041 - 54700049	1	628888.0	1423400
8	TO NO. 54700040	1	749828.0	1423394
9	CUTTERBAR DRIVE, 2ND STAGE WITHOUT VARIABLE SPEED DRIVE	2	667454.1	1402549
10	CUTTERBAR DRIVE, 3RD STAGE WITH VARIABLE SPEED DRIVE	2	667551.2	1402587
11	SYNCHRONOUS DRIVE	1	667249.0	1423196
12	CUTTERBAR VARIATOR	1	667530.1	1463300
13	CHAFF SPREADER	1	758719.0	1401122
14	CLEANING, 3RD STAGE	1	667651.1	0423458
15	CLEANING, 1STE STAGE	1	644209.2	0102250
18	CHOPPER DRIVE, 4TH STAGE	1	661093.1	1423202
19	FINGER ROLLER	1	509035.1	1501475
20	GRAIN ELEVATOR	1	754315.1	Chain
22	DRUM VARIATOR	1	667248.0	1453293
23	DRUM DRIVE	1	176442.1	2124287
24	RETURNS ELEVATOR	1	642492.0	Chain
25	FAN DRIVE	1	742026.2	1601218
26	SUCTION FAN	1	644781.0	0200118
27	FAN VARIATOR	1	667457.0	1410203
28	PRE - DRUM DRIVE	1	667251.1	1423224
29	HYDRAULIC REEL DRIVE	1	829094.0	1401137
30	STRAW WALKER DRIVE	1	667477.0	0101311
31	STRAW SPREADER	1	539443.0	1499395
32	DRUM VARIATOR 2ND STAGE	1	667248.0	1453293
33	RADIATOR SCREEN 2ND STAGE	1	545689.0	0300225
34	ENGINE C9	1	796474.0	0385331
35	FAN DRIVE	1	796450.0	0242166
36	SUCTION BLOWER E - CHANNEL	1	765985.0	1900123

LEXION 460 TERRA

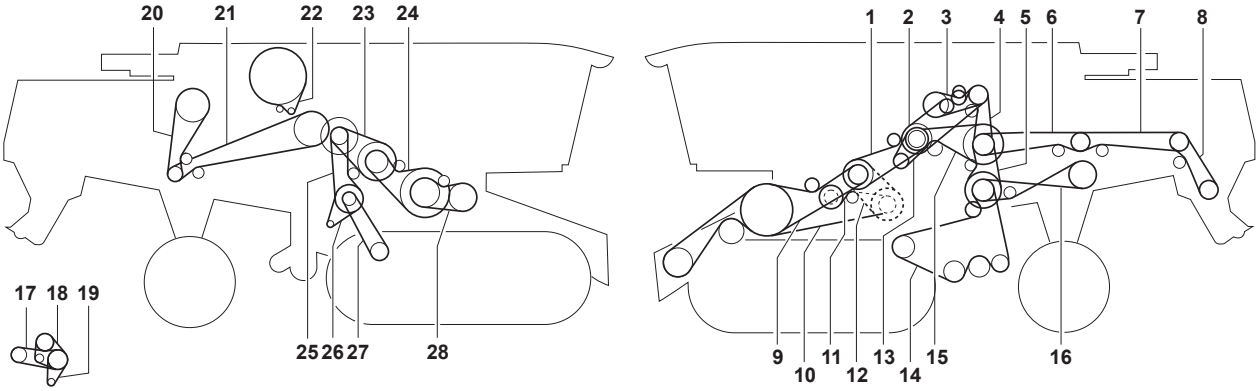

			OE	
1	1STE STAGE CUTTERBAR	1	667255.1	1424282
2	THRESHING MECHANISM	1	667453.0	1426293
3	GRAIN TANK UNLOADING	1	667250.0	1423210
4	1STE STAGE CHOPPER	1	667958.3	1423216
5	2ND STAGE CLEANING	1	667252.0	1423240
6	2ND STAGE CHOPPER	1	061700.1	1423319
7	3RD STAGE CHOPPER	1	061700.1	1423319
8	4TH STAGE CHOPPER	1	661093.1	1423202
9	2ND STAGE CUTTERBAR WITHOUT VARIABLE SPEED	2	667454.1	1402549
10	3RD STAGE CUTTERBAR WITH VARIABLE SPEED	2	667551.2	1402587
11	IMPELLER DRUM	1	667249.0	1423196
12	CUTTERBAR VARIABLE SPEED	1	667530.1	1463300
13	HYDRAULIC PUMP	1	758719.0	1401122
14	3RD STAGE CLEANING	1	667651.1	0423458
15	1STE STAGE CLEANING	1	644209.2	0102250
16	STRAW WALKER	1	667477.0	0101311
17	COMPRESSOR	1	667560.1	1472264
18	MOTOR FAN	1	667242.0	1401113
19	1STE STAGE RADIATOR SCREEN	1	667456.0	0372231
20	REAR FEED RAKE	1	667973.0	1401234
21	FRONT FEED RAKE	1	667974.0	1401384
22	2ND STAGE RADIATOR SCREEN	1	667561.1	1400234
23	DRUM VARIABLE SPEED DRIVE	1	667248.0	1453293
24	THRESHING DRUM FROM NO. 45800017	1	176442.1	2124287
24	THRESHING DRUM TO NO. 45700016	1	667458.0	1424296
24	THRESHING DRUM AT DISC D 593 MM OPTIONAL	1	667255.1	1424282
25	1STE STAGE BLOWER	1	742026.2	1601218
26	FAN VARIABLE SPEED DRIVE	1	667457.0	1410203
27	ACCELERATOR	1	667251.1	1423224
28	SUCTION FAN	1	644781.0	0200118

LEXION 470

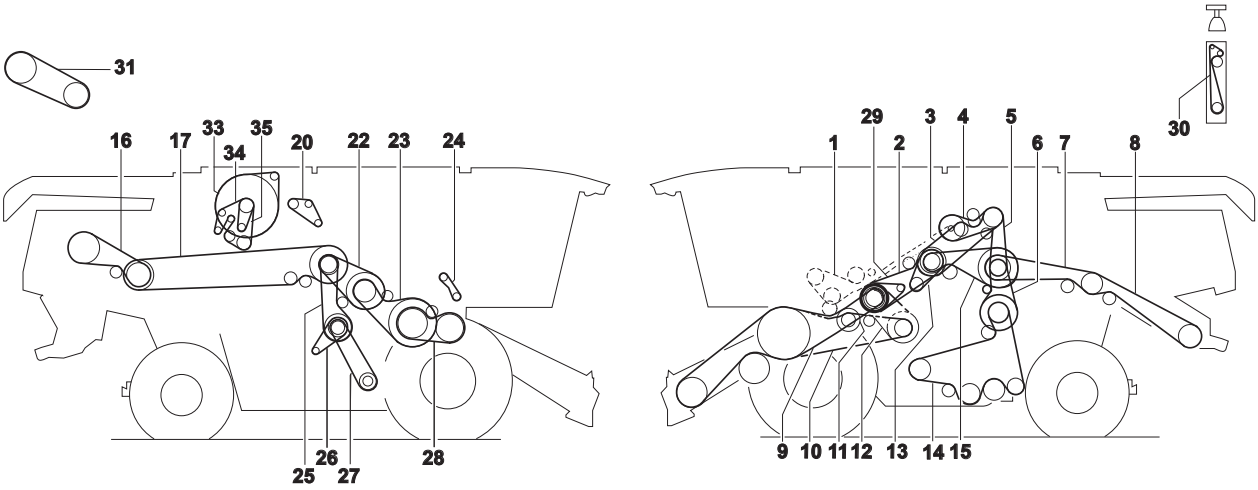

			OE	
1	DISCHARGE DRIVE GRAIN TANK (ROLLER CHAIN)	1	755508.0	Chain
1	EXTRA WEAR-PROOF (ROLLER CHAIN)	1	758710.0	Chain
2	CUTTERBAR DRIVE, 1STE STAGE	1	667255.1	1424282
3	THRESHING MECHANISM DRIVE	1	352403.0	1426293
4	DISCHARGE DRIVE GRAIN TANK	1	667250.0	1423210
5	CHOPPER DRIVE - 1ST STAGE	1	667958.3	1423216
6	SIEVE PAN DRIVE - 2ND STAGE	1	667252.0	1423240
7	CHOPPER DRIVE - 2ND STAGE	1	061700.1	1423319
8	CHOPPER DRIVE - 3RD STAGE	1	350463.0	1423348
9	CUTTERBAR DRIVE, 2ND STAGE WITHOUT VARIABLE SPEED DRIVE	2	667454.1	1402549
10	CUTTERBAR DRIVE, 3RD STAGE WITH VARIABLE SPEED DRIVE	2	667551.2	1402587
11	SYNCHRONOUS DRIVE	1	667249.0	1423196
12	CUTTERBAR DRIVE WITH VARIABLE SPEED DRIVE	1	667530.1	1463300
13	CHAFF SPREADER DRIVE	1	758719.0	1401122
14	CLEANING - 3RD STAGE	1	667651.1	0423458
15	CLEANING - 1ST STAGE	1	644209.2	0102250
16	HYBRID DRIVE - 2ND STAGE	1	629510.1	1424238 EE-TECH
17	HYBRID DRIVE - 1ST STAGE	1	749886.1	1424641
21	ELEVATOR (ROLLER CHAIN) GRAIN	1	754315.1	Chain
22	DRUM DRIVE VARIABLE SPEED	1	667248.0	1453293
23	DRUM DRIVE	1	176442.1	2124287
24	RETURN ELEVATOR (ROLLER CHAIN)	1	642492.0	Chain
25	FAN DRIVE	1	742026.2	1601218
26	SUCTION FAN	1	644781.0	0200118
27	FAN DRIVE VARIABLE SPEED	1	667457.0	1410203
28	PRE-DRUM DRIVE	1	667251.1	1423224
29	HYDRAULIC REEL PUMP DRIVE	1	829094.0	1401137
30	STRAW SPREADER DRIVE	1	539443.0	1499395
31	HYBRID VARIABLE SPEED DRIVE	1	667248.0	1453293
32	RADIATOR SCREEN - 2ND STAGE	1	545689.0	0300225
33	ENGINE C9	1	796474.0	0385331
34	FAN DRIVE	1	796450.0	0242166

LEXION 470 MONTANA

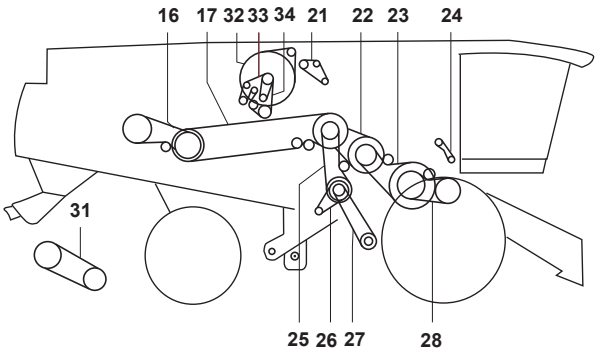

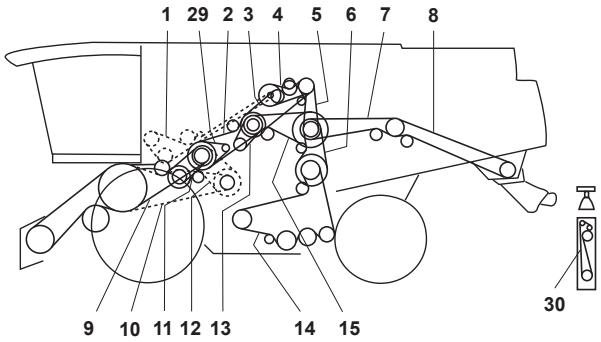

			OE	
1	GRAIN TANK UNLOADING	1	755508.0	Chain
1	EXTRA WEAR - PROOF	1	758710.0	Chain
2	CUTTERBAR DRIVE, 1STE STAGE	1	667255.1	1424282
3	THRESHING MECHANISM DRIVE	1	352403.0	1426293
4	GRAIN TANK UNLOADING	1	667250.0	1423210
5	CHOPPER DRIVE 1STE STAGE	1	667958.3	1423216
6	SIEVE PAN, 2ND STAGE	1	667252.0	1423240
7	CHOPPER DRIVE, 2ND STAGE	1	061700.1	1423319
8	CHOPPER DRIVE, 3RD STAGE	1	350463.0	1423348
9	CUTTERBAR DRIVE, 2ND STAGE WITHOUT VARIABLE SPEED DRIVE	2	667454.1	1402549
10	CUTTERBAR DRIVE 3RD STAGE WITH VARIABLE SPEED DRIVE	2	667551.2	1402587
11	SYNCHRONOUS DRIVE	1	667249.0	1423196
12	CUTTERBAR VARIATOR	1	667530.1	1463300
13	CHAFF SPREADER	1	758719.0	1401122
14	CLEANING, 3RD STAGE	1	667651.1	0423458
15	CLEANING, 1STE STAGE	1	644209.2	0102250
16	HYBRID DRIVE, 2ND STAGE	1	629510.1	1424238 EE-TECH
17	HYBRID DRIVE, 1STE STAGE	1	749886.1	1424641
21	GRAIN ELEVATOR	1	754315.1	Chain
22	DRUM VARIATOR	1	667248.0	1453293
23	DRUM DRIVE	1	176442.1	2124287
24	RETURNS ELEVATOR	1	642492.0	Chain
25	FAN DRIVE	1	742026.2	1601218
26	SUCTION FAN	1	644781.0	0200118
27	FAN VARIATOR	1	667457.0	1410203
28	PRE - DRUM DRIVE	1	667251.1	1423224
29	HYDRAULIC REEL DRIVE	1	829094.0	1401137
30	STRAW SPREADER	1	539443.0	1499395
31	HYBRID VARIABLE SPEED DRIVE	1	667248.0	1453293
32	RADIATOR SCREEN 2ND STAGE	1	545689.0	0300225
33	ENGINE C9	1	796474.0	0385331
34	FAN DRIVE	1	796450.0	0242166

LEXION 480

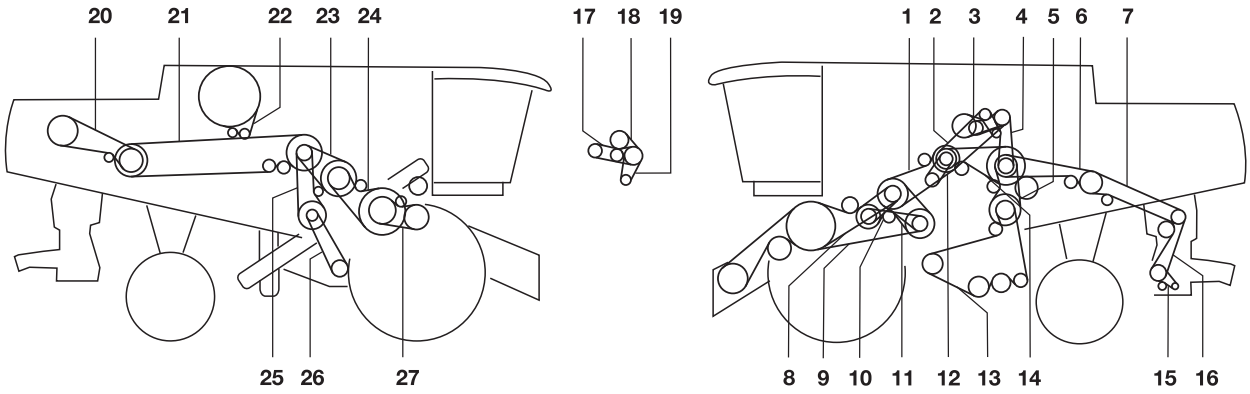

			OE	
0	REEL DRIVE VARIABLE SPEED	1	670244.1	1462186
0	KNIFE DRIVE	1	742025.0	0502215
1	CLUTCH FOR CUTTERBAR DRIVE	1	667255.1	1424282
2	TENSIONER FOR THRESHING MECHANICAL DRIVE	1	667881.0	1499431
3	DISCHARGE DRIVE GRAIN TANK	1	667250.0	1423210
4	STRAW CHOPPER DRIVE - 1ST STAGE	1	644685.1	1424218
5	SIEVE PAN DRIVE - 2ND STAGE	1	667252.0	1423240
6	STRAW CHOPPER DRIVE - 2ND STAGE	1	061700.1	1423319
7	STRAW CHOPPER DRIVE - 2ND STAGE	1	661298.0	1423274
7	STRAW CHOPPER DRIVE - 2ND STAGE	1	749712.0	1423329
8	CUTTERBAR DRIVE WITHOUT VARIATOR DRIVE	2	667454.1	1402549
9	CUTTERBAR DRIVE WITH VARIABLE SPEED DRIVE	2	667551.2	1402587
10	IMPELLER DRUM DRIVE	1	667249.0	1423196
11	CUTTERBAR DRIVE WITH VARIABLE SPEED DRIVE	1	667530.1	1463300
12	HYDRAULIC PUMP DRIVE	1	758719.0	1401122
12	HYDRAULIC PUMP DRIVE	1	233843.1	1401127
13	SIEVE PAN DRIVE 2RD STAGE	1	667651.1	0423458
14	SIEVE PAN DRIVE - 1ST STAGE	1	644209.2	0102250
15	UNI SPREADER DRIVE - 2ND STAGE	1	667891.1	1469483
16	UNI SPREADER DRIVE - 1ST STAGE	1	667798.2	0301198
17	COMPRESSOR DRIVE	1	667560.1	1472264
18	ROTARY SCREEN FAN AND DRIVE	1	667242.0	1401113
19	ROTARY SCREEN DRIVE	1	667456.0	0372231
20	HYBRID DRIVE - 2ND STAGE	1	667427.0	0124242 EE-TECH
20	HYBRID DRIVE - 2ND STAGE	1	667983.0	1424313
21	HYBRID DRIVE - 1ST STAGE	1	667554.0	1424560
22	ROTARY SCREEN DRIVE	1	667561.1	1400234
23	THRESHING DRUM VARIATOR DRIVE	1	667248.0	1453293
24	THRESHING DRUM VARIATOR DRIVE	1	667458.0	1424296
25	FAN DRIVE - 1ST STAGE	1	742026.2	1601218
26	FAN INTERMEDIATE DRIVE	1	667457.0	1410203
27	SPEED REDUCING GEAR BOX	1	667251.1	1423224

LEXION 480 II

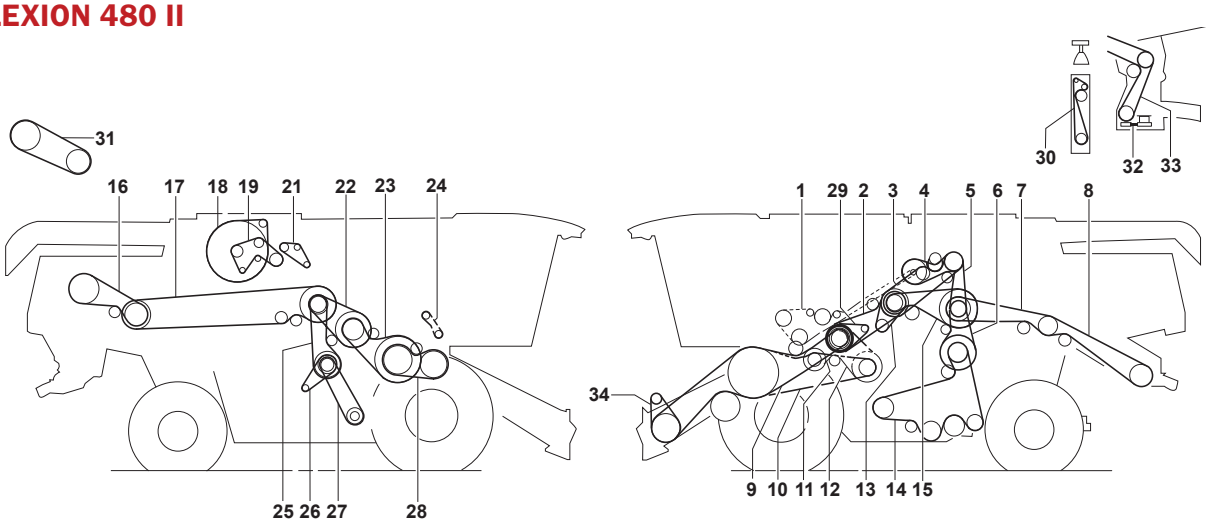

1	GRAIN TANK UNLOADING	1	755508.0	Chain
1	EXTRA WEAR - PROOF	1	758710.0	Chain
2	CUTTERBAR DRIVE, 1STE STAGE	1	667255.1	1424282
3	THRESHING MECHANISM DRIVE	1	667881.0	1499431
4	GRAIN TANK UNLOADING	1	667250.0	1423210
5	CHOPPER DRIVE 1STE STAGE	1	644966.0	1424218
6	SIEVE PAN, 2ND STAGE	1	667252.0	1423240
7	CHOPPER DRIVE, 2ND STAGE	1	644889.0	1423319
8	CHOPPER DRIVE, 3RD STAGE ONLY FOR RICE	1	350463.0	1423348
8	STRENGTHENED DRIVE	1	644890.0	1423329
9	CUTTERBAR DRIVE, 2ND STAGE WITHOUT VARIABLE SPEED DRIVE	2	667454.1	1402549
10	CUTTERBAR DRIVE, 3RD STAGE WITH VARIABLE SPEED DRIVE	2	667551.2	1402587
11	SYNCHRONOUS DRIVE	1	667249.0	1423196
12	CUTTERBAR VARIATOR	1	667530.1	1463300
13	AT CHAFF SPREADER	1	758719.0	1401122
13	AT SPREADER FAN	1	233843.1	1401127
14	CLEANING, 3RD STAGE	1	644866.0	1323464
15	CLEANING, 1STE STAGE	1	644209.2	0102250
16	HYBRID DRIVE, 2ND STAGE	1	629510.1	1424238 EE-TECH
17	HYBRID DRIVE, 1STE STAGE	1	749886.1	1424641
18	RADIATOR SCREEN 2ND STAGE	1	545689.0	0300225
19	FAN DRIVE / C12	1	761979.1	0285317
21	GRAIN ELEVATOR	1	754315.1	Chain
22	DRUM VARIATOR	1	667248.0	1453293
23	DRUM DRIVE	1	176442.1	2124287
24	RETURNS ELEVATOR	1	642492.0	Chain
25	FAN DRIVE	1	742026.2	1601218
26	SUCTION FAN	1	644781.0	0200118
27	FAN VARIATOR	1	667457.0	1410203
28	PRE - DRUM DRIVE	1	667251.1	1423224
29	HYDRAULIC REEL DRIVE	1	829094.0	1401137
30	STRAW SPREADER	1	539443.0	1499395
31	HYBRID VARIABLE SPEED DRIVE	1	667248.0	1453293
32	SPREADER FAN, 2ND STAGE	1	667891.1	1469483
33	SPREADER FAN, 1STE STAGE	1	644942.0	1402293
34	SUCTION BLOWER E - CHANNEL	1	765985.0	1900123

LEXION 480 II MTS

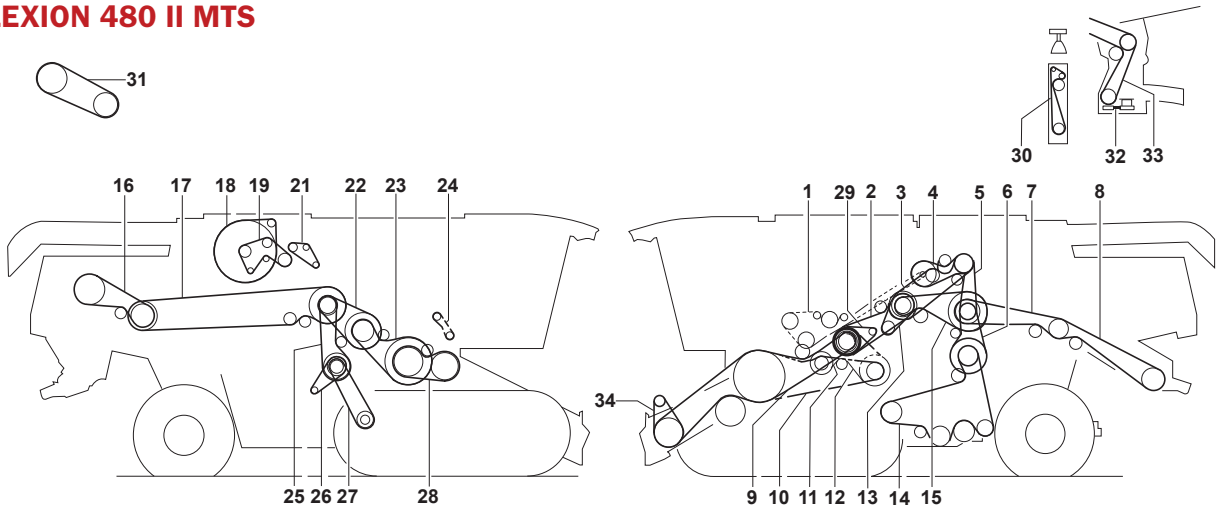

1	GRAIN TANK UNLOADING	1	755508.0	Chain
1	EXTRA WEAR - PROOF	1	758710.0	Chain
2	CUTTERBAR DRIVE, 1STE STAGE	1	667255.1	1424282
3	THRESHING MECHANISM DRIVE	1	667881.0	1499431
4	GRAIN TANK UNLOADING	1	667250.0	1423210
5	CHOPPER DRIVE, 1STE STAGE	1	644966.0	1424218
6	SIEVE PAN, 2ND STAGE	1	667252.0	1423240
7	CHOPPER DRIVE, 2ND STAGE	1	644889.0	1423319
8	CHOPPER DRIVE, 3RD STAGE ONLY FOR RICE	1	350463.0	1423348
8	STRENGTHENED DRIVE	1	644890.0	1423329
9	CUTTERBAR DRIVE, 2ND STAGE WITHOUT VARIABLE SPEED DRIVE	2	667454.1	1402549
10	CUTTERBAR DRIVE 3RD STAGE WITH VARIABLE SPEED DRIVE	2	667551.2	1402587
11	SYNCHRONOUS DRIVE	1	667249.0	1423196
12	CUTTERBAR VARIATOR	1	667530.1	1463300
13	AT CHAFF SPREADER	1	758719.0	1401122
13	AT SPREADER FAN	1	233843.1	1401127
14	CLEANING, 3RD STAGE	1	644866.0	1323464
15	CLEANING, 1STE STAGE	1	644209.2	0102250
16	HYBRID DRIVE, 2ND STAGE	1	629510.1	1424238 EE-TECH
17	HYBRID DRIVE, 1STE STAGE	1	749886.1	1424641
18	RADIATOR SCREEN 2ND STAGE	1	545689.0	0300225
19	FAN DRIVE / C12	1	761979.1	0285317
21	GRAIN ELEVATOR	1	754315.1	Chain
22	DRUM VARIATOR	1	667248.0	1453293
23	DRUM DRIVE	1	176442.1	2124287
24	RETURNS ELEVATOR	1	642492.0	Chain
25	FAN DRIVE	1	742026.2	1601218
26	SUCTION FAN	1	644781.0	0200118
27	FAN VARIATOR	1	667457.0	1410203
28	PRE - DRUM DRIVE	1	667251.1	1423224
29	HYDRAULIC REEL DRIVE	1	829094.0	1401137
30	STRAW SPREADER	1	539443.0	1499395
31	HYBRID VARIABLE SPEED DRIVE	1	667248.0	1453293
32	SPREADER FAN, 2ND STAGE	1	667891.1	1469483
33	SPREADER FAN, 1STE STAGE	1	644942.0	1402293
34	SUCTION BLOWER E - CHANNEL	1	765985.0	1900123

LEXION 480 TERRA

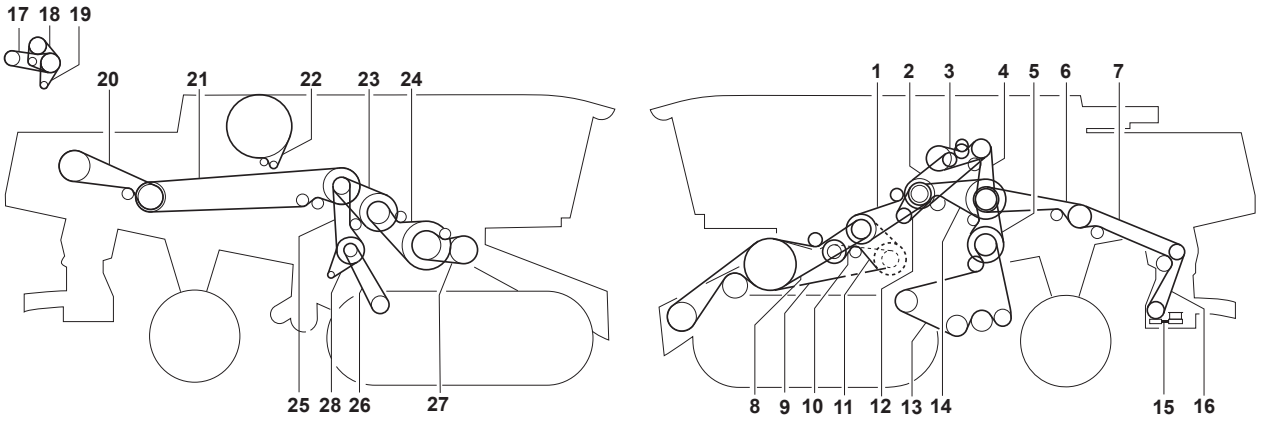

			OE	
1	1STE STAGE CUTTERBAR	1	667255.1	1424282
2	THRESHING MECHANISM	1	667881.0	1499431
3	GRAIN TANK UNLOADING	1	667250.0	1423210
4	1STE STAGE CHOPPER FROM NO. 46800071	1	644966.0	1424218
4	1STE STAGE CHOPPER TO NO. 46800070	1	644685.1	1424218
5	2ND STAGE CLEANING	1	667252.0	1423240
6	2ND STAGE CHOPPER FROM NO. 46800071	1	644889.0	1423319
6	2ND STAGE CHOPPER TO NO. 46800070	1	061700.1	1423319
7	3RD STAGE CHOPPER FROM NO. 46800071	1	644890.0	1423329
7	3RD STAGE CHOPPER TO NO. 46800070	1	749712.0	1423329
8	2ND STAGE CUTTERBAR WITHOUT VARIABLE SPEED	2	667454.1	1402549
9	3RD STAGE CUTTERBAR WITH VARIABLE SPEED DRIVE	2	667551.2	1402587
10	IMPELLER DRUM	1	667249.0	1423196
11	CUTTERBAR VARIABLE SPEED DRIVE	1	667530.1	1463300
12	STRAW SPREADER	1	233843.1	1401127
12	STRAW SPREADER	1	758719.0	1401122
13	3RD STAGE CLEANING	1	644866.0	1323464
14	1STE STAGE CLEANING	1	644209.2	0102250
15	2ND STAGE SPREADER BLOWER	1	667891.1	1469483
16	1STE EACH SPREADER BLOWER FROM NO. 46800034	1	644942.0	1402293
16	1STE EACH SPREADER BLOWER TO NO. 46800033	1	667798.2	0301198
17	COMPRESSOR	1	667560.1	1472264
18	MOTOR FAN	1	667242.0	1401113
19	1STE STAGE RADIATOR SCREEN	1	667456.0	0372231
20	2ND STAGE HYBRID FROM NO. 46800081	1	629510.1	1424238 EE-TECH
20	2ND STAGE HYBRID TO NO. 46800080	1	667983.0	1424313
20	BEI N = 300 MIN-1	1	667458.0	1424296
21	1STE STAGE HYBRID FROM NO. 46800081	1	749886.1	1424641
21	1STE STAGE HYBRID TO NO. 46800080	1	667554.0	1424560
22	2ND STAGE RADIATOR SCREEN	1	667561.1	1400234
23	DRUM VARIBALE SPEED DRIVE	1	667248.0	1453293
24	THRESHING DRUM	1	176442.1	2124287
24	THRESHING DRUM AT DISC 644878.1 OPTIONAL	1	667255.1	1424282
25	1STE STAGE BLOWER	1	742026.2	1601218
26	FAN VARIABLE SPEED DRIVE	1	667457.0	1410203
27	ACCELERATOR	1	667251.1	1423224
28	SUCTION FAN	1	644781.0	0200118

LEXION 510

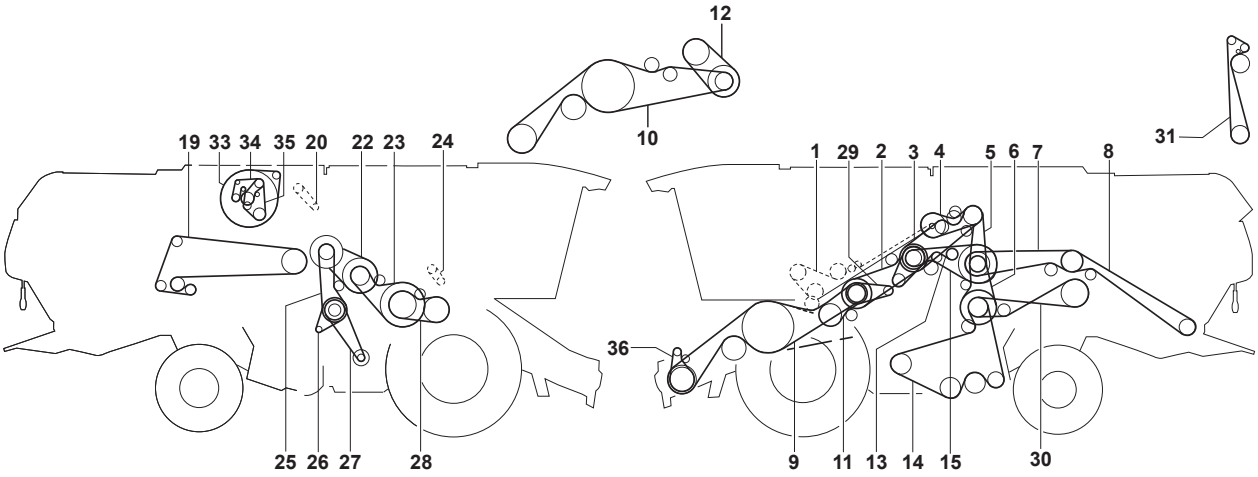

			OE	
1	GRAIN TANK UNLOADING	1	755537.0	Chain
1	EXTRA WEAR - PROOF	1	758711.0	Chain
2	CUTTERBAR DRIVE, 1STE STAGE	1	644892.0	1424282
3	THRESHING MECHANISM DRIVE P02/540/541/560/P02/670/671/680/681	1	352371.1	1425292
3	THRESHING MECHANISM DRIVE P02/590/591/660/661	1	667453.0	1426293
4	GRAIN TANK UNLOADING	1	667250.0	1423210
5	CHOPPER DRIVE, 1STE STAGE AT MOTOR 3126B AND C9 - EXHAUST LEVEL 3A	1	667958.3	1423216
5	CHOPPER DRIVE, 1STE STAGE AT MOTOR C6.6	1	355696.0	1423214
6	SIEVE PAN, 2ND STAGE	1	667252.0	1423240
7	CHOPPER DRIVE, 2ND STAGE	1	061700.1	1423319
8	CHOPPER DRIVE, 3RD STAGE RIGID CHOPPER	1	628888.0	1423400
9	CUTTERBAR DRIVE, 2ND STAGE WITHOUT VARIABLE SPEED DRIVE	2	667454.1	1402549
10	CUTTERBAR DRIVE, 3RD STAGE WITH VARIABLE SPEED DRIVE	2	667551.2	1402587
11	SYNCHRONOUS DRIVE	1	667249.0	1423196
12	CUTTERBAR VARIATOR	1	667530.1	1463300
13	CHAFF SPREADER	1	746508.3	0201155
14	CLEANING, 3RD STAGE	1	667651.1	0423458
15	CLEANING, 1STE STAGE	1	644209.2	0102250
19	FINGER ROLLER	1	628991.0	1401499
20	GRAIN ELEVATOR	1	754315.1	Chain
22	DRUM VARIATOR FROM NO. 58300369	1	667248.0	1453293
22	DRUM VARIATOR	1	661427.0	1499369
23	DRUM DRIVE	1	176442.1	2124287
23	DRUM DRIVE	1	644902.0	1423292
24	RETURNS ELEVATOR	1	642492.0	Chain
25	FAN DRIVE	2	778717.1	1401209
26	SUCTION BLOWER	1	644843.0	1400115
27	FAN VARIATOR	1	667457.0	1410203
28	PRE - DRUM DRIVE	1	667251.1	1423224
29	HYDRAULIC REEL DRIVE	1	829094.0	1401137
30	STRAW WALKER DRIVE	1	667477.0	0101311

LEXION 510 (CONTINUED)

			OE	
31	STRAW SPREADER	1	539443.0	1499395
33	RADIATOR SCREEN 2ND STAGE	1	545689.0	0300225
34	AT MOTOR 3126B	1	796474.0	0385331
34	ENGINE C6.6	1	798820.0	☎
35	FAN DRIVE AT MOTOR 3126B	1	796450.0	0242166
35	AT MOTOR C9	1	584627.1	0785285
35	AT MOTOR C6.6	1	580157.0	0785276
36	SUCTION BLOWER E - CHANNEL	1	765985.0	1900123

LEXION 520 MONTANA

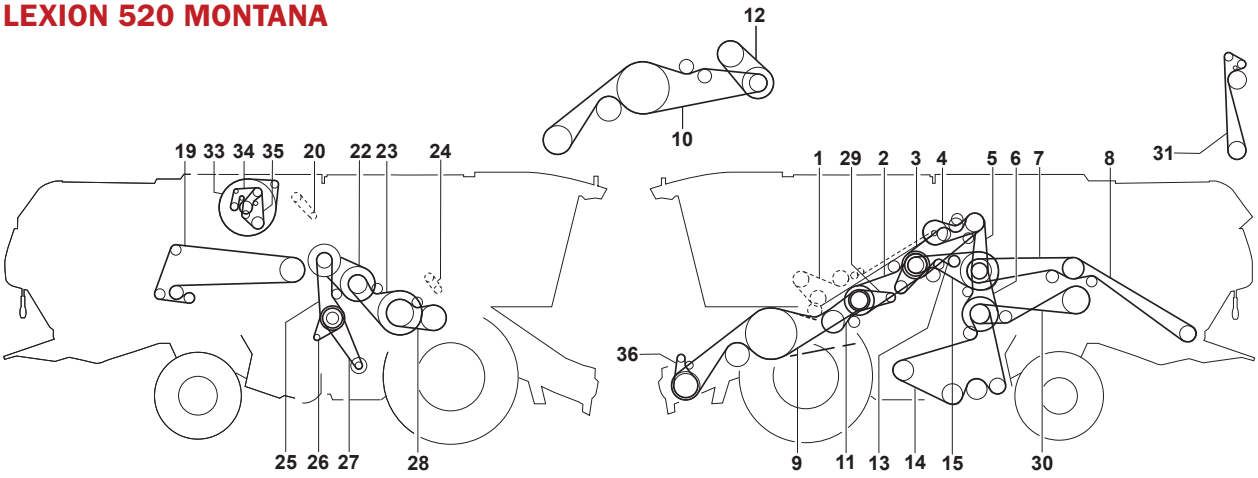

			OE	
1	GRAIN TANK UNLOADING	1	755537.0	Chain
1	EXTRA - WEAR PROOF	1	758711.0	Chain
2	CUTTERBAR DRIVE 1STE STAGE	1	644892.0	1424282
3	THRESHING MECHANISM DRIVE P02/540/541/670/671	1	352371.1	1425292
3	THRESHING MECHANISM DRIVE P02/660/661 FROM NO. 58200137	1	352403.0	1426293
3	THRESHING MECHANISM DRIVE P02/590/591 P02/660/661	1	667453.0	1426293
4	GRAIN TANK UNLOADING	1	667250.0	1423210
5	CHOPPER DRIVE, 1STE STAGE AT MOTOR 3126B, C9	1	667958.3	1423216
5	CHOPPER DRIVE, 1STE STAGE AT MOTOR C6.6	1	355696.0	1423214
6	SIEVE PAN 2ND STAGE	1	667252.0	1423240
7	CHOPPER DRIVE, 2ND STAGE	1	061700.1	1423319
8	CHOPPER DRIVE, 3RD STAGE RIGID CHOPPER	1	628888.0	1423400
9	CUTTERBAR DRIVE, 2ND STAGE WITHOUT VARIABLE SPEED DRIVE	2	667454.1	1402549
10	CUTTERBAR DRIVE 3RD STAGE WITH VARIABLE SPEED DRIVE	2	667551.2	1402587
11	SYNCHRONOUS DRIVE	1	667249.0	1423196
12	CUTTERBAR VARIATOR	1	667530.1	1463300
13	CHAFF SPREADER	1	746508.3	0201155
14	CLEANING, 3RD STAGE	1	667651.1	0423458
15	CLEANING, 1STE STAGE	1	644209.2	0102250
19	FINGER ROLLER	1	628991.0	1401499
20	GRAIN ELEVATOR	1	754315.1	Chain
22	DRUM VARIATOR	1	667248.0	1453293
23	DRUM DRIVE	1	176442.1	2124287
24	RETURNS ELEVATOR	1	642492.0	Chain
25	FAN DRIVE	4	746506.0	0101222
26	SUCTION FAN	1	644781.0	0200118
27	FAN VARIATOR	1	667457.0	1410203
28	PRE - DRUM DRIVE	1	667251.1	1423224
29	HYDRAULIC REEL DRIVE	1	829094.0	1401137
30	STRAW WALKER DRIVE	1	667477.0	0101311
31	STRAW SPREADER	1	539443.0	1499395
33	RADIATOR SCREEN 2ND STAGE	1	545689.0	0300225
34	AT MOTOR 3126B	1	796474.0	0385331
34	ENGINE C6.6	1	798820.0	☎
35	FAN DRIVE AT MOTOR 3126B	1	796450.0	0242166
35	AT MOTOR C9	1	584627.1	0785285
35	AT MOTOR C6.6	1	580157.0	0785276
36	SUCTION BLOWER E - CHANNEL	1	765985.0	1900123

LEXION 530

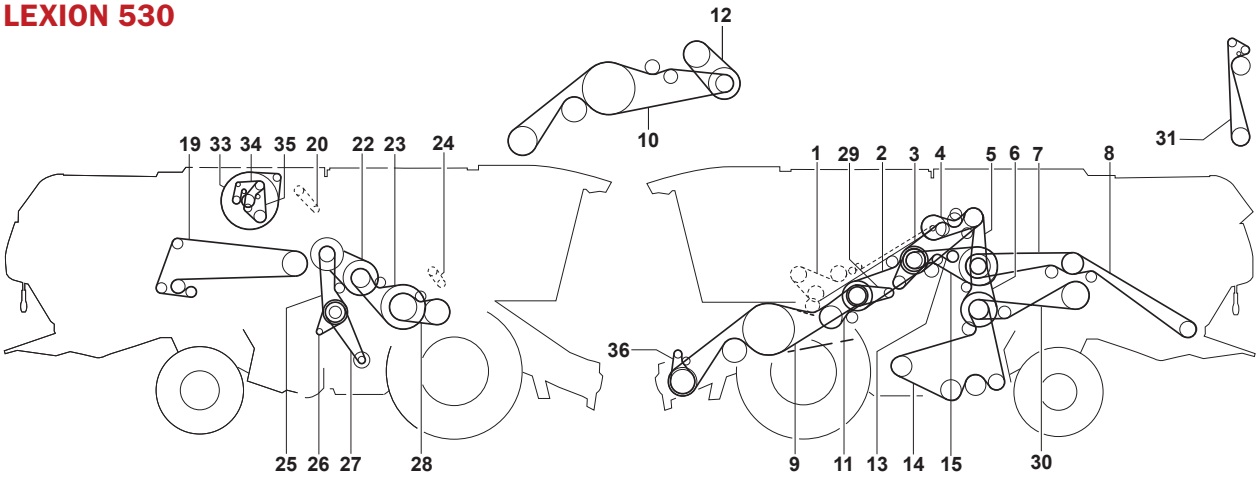

			OE	
1	GRAIN TANK UNLOADING	1	755537.0	Chain
1	EXTRA WEAR - PROOF	1	758711.0	Chain
2	CUTTERBAR DRIVE, 1STE STAGE	1	644892.0	1424282
3	THRESHING MECHANISM DRIVE P02/540/541/560/P02/670/671/680/681	1	352371.1	1425292
3	THRESHING MECHANISM DRIVE P02/590/591/660/661	1	667453.0	1426293
4	GRAIN TANK UNLOADING	1	667250.0	1423210
5	CHOPPER DRIVE, 1STE STAGE AT MOTOR 3126B AND C9 - EXHAUST LEVEL 3A	1	667958.3	1423216
5	CHOPPER DRIVE, 1STE STAGE AT MOTOR C6.6	1	355696.0	1423214
6	SIEVE PAN, 2ND STAGE	1	667252.0	1423240
7	CHOPPER DRIVE, 2ND STAGE	1	061700.1	1423319
8	CHOPPER DRIVE, 3RD STAGE RIGID CHOPPER	1	628888.0	1423400
9	CUTTERBAR DRIVE, 2ND STAGE WITHOUT VARIABLE SPEED DRIVE	2	667454.1	1402549
10	CUTTERBAR DRIVE, 3RD STAGE WITH VARIABLE SPEED DRIVE	2	667551.2	1402587
11	SYNCHRONOUS DRIVE	1	667249.0	1423196
12	CUTTERBAR VARIATOR	1	667530.1	1463300
13	CHAFF SPREADER	1	746508.3	0201155
14	CLEANING, 3RD STAGE	1	667651.1	0423458
15	CLEANING, 1STE STAGE	1	644209.2	0102250
19	FINGER ROLLER	1	628991.0	1401499
20	GRAIN ELEVATOR	1	754315.1	Chain
22	DRUM VARIATOR FROM NO. 58300369	1	667248.0	1453293
23	DRUM DRIVE LEXION 530, 520, 510 FROM NO. 58300369	1	176442.1	2124287
24	RETURNS ELEVATOR	1	642492.0	Chain
25	FAN DRIVE	4	746506.0	0101222
26	SUCTION BLOWER	1	644781.0	0200118
27	FAN VARIATOR	1	667457.0	1410203
28	PRE - DRUM DRIVE	1	667251.1	1423224
29	HYDRAULIC REEL DRIVE	1	829094.0	1401137
30	STRAW WALKER DRIVE	1	667477.0	0101311
31	STRAW SPREADER	1	539443.0	1499395
33	RADIATOR SCREEN 2ND STAGE	1	545689.0	0300225
34	AT MOTOR 3126B	1	796474.0	0385331
34	ENGINE C6.6	1	798820.0	☎
35	FAN DRIVE AT MOTOR 3126B	1	796450.0	0242166
35	AT MOTOR C9	1	584627.1	0785285
35	AT MOTOR C6.6	1	580157.0	0785276
36	SUCTION BLOWER E - CHANNEL	1	765985.0	1900123

LEXION 530 MONTANA

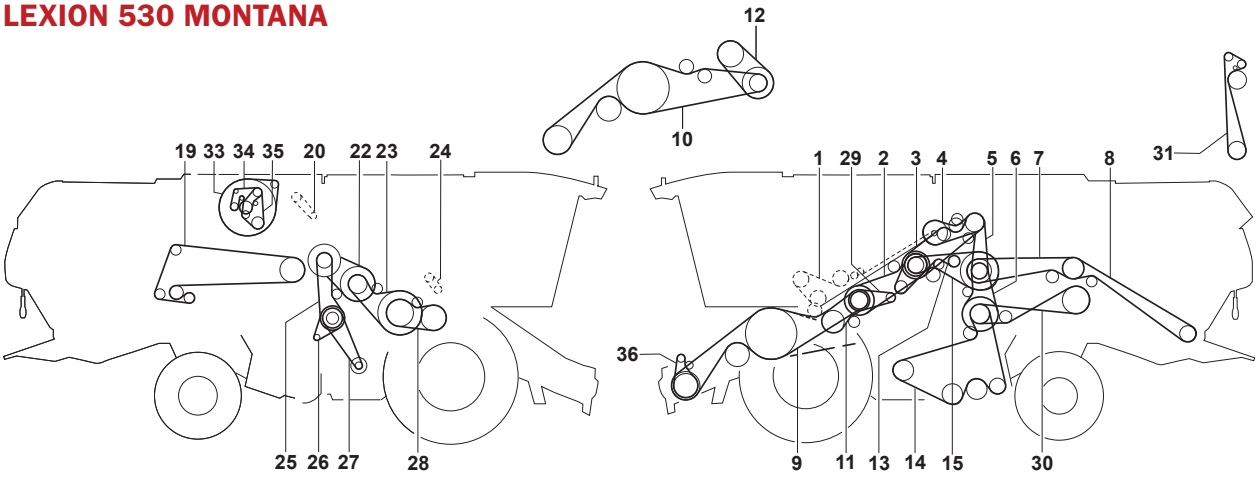

			OE	
1	GRAIN TANK UNLOADING	1	755537.0	Chain
1	EXTRA - WEAR PROOF	1	758711.0	Chain
2	CUTTERBAR DRIVE 1STE STAGE	1	644892.0	1424282
3	THRESHING MECHANISM DRIVE P02/540/541/670/671	1	352371.1	1425292
3	THRESHING MECHANISM DRIVE P02/660/661 FROM NO. 58200137	1	352403.0	1426293
3	THRESHING MECHANISM DRIVE P02/590/591 P02/660/661	1	667453.0	1426293
4	GRAIN TANK UNLOADING	1	667250.0	1423210
5	CHOPPER DRIVE, 1STE STAGE AT MOTOR 3126B, C9	1	667958.3	1423216
5	CHOPPER DRIVE, 1STE STAGE AT MOTOR C6.6	1	355696.0	1423214
6	SIEVE PAN 2ND STAGE	1	667252.0	1423240
7	CHOPPER DRIVE, 2ND STAGE	1	061700.1	1423319
8	CHOPPER DRIVE, 3RD STAGE RIGID CHOPPER	1	628888.0	1423400
9	CUTTERBAR DRIVE, 2ND STAGE WITHOUT VARIABLE SPEED DRIVE	2	667454.1	1402549
10	CUTTERBAR DRIVE 3RD STAGE WITH VARIABLE SPEED DRIVE	2	667551.2	1402587
11	SYNCHRONOUS DRIVE	1	667249.0	1423196
12	CUTTERBAR VARIATOR	1	667530.1	1463300
13	CHAFF SPREADER	1	746508.3	0201155
14	CLEANING, 3RD STAGE	1	667651.1	0423458
15	CLEANING, 1STE STAGE	1	644209.2	0102250
19	FINGER ROLLER	1	628991.0	1401499
20	GRAIN ELEVATOR	1	754315.1	Chain
22	DRUM VARIATOR	1	667248.0	1453293
23	DRUM DRIVE	1	176442.1	2124287
24	RETURNS ELEVATOR	1	642492.0	Chain
25	FAN DRIVE	4	746506.0	0101222
26	SUCTION FAN	1	644781.0	0200118
27	FAN VARIATOR	1	667457.0	1410203
28	PRE - DRUM DRIVE	1	667251.1	1423224
29	HYDRAULIC REEL DRIVE	1	829094.0	1401137
30	STRAW WALKER DRIVE	1	667477.0	0101311
31	STRAW SPREADER	1	539443.0	1499395
33	RADIATOR SCREEN 2ND STAGE	1	545689.0	0300225
34	AT MOTOR 3126B	1	796474.0	0385331
34	ENGINE C6.6	1	798820.0	☎
35	FAN DRIVE AT MOTOR 3126B	1	796450.0	0242166
35	AT MOTOR C9	1	584627.1	0785285
35	AT MOTOR C6.6	1	580157.0	0785276
36	SUCTION BLOWER E - CHANNEL	1	765985.0	1900123

LEXION 540 - 560

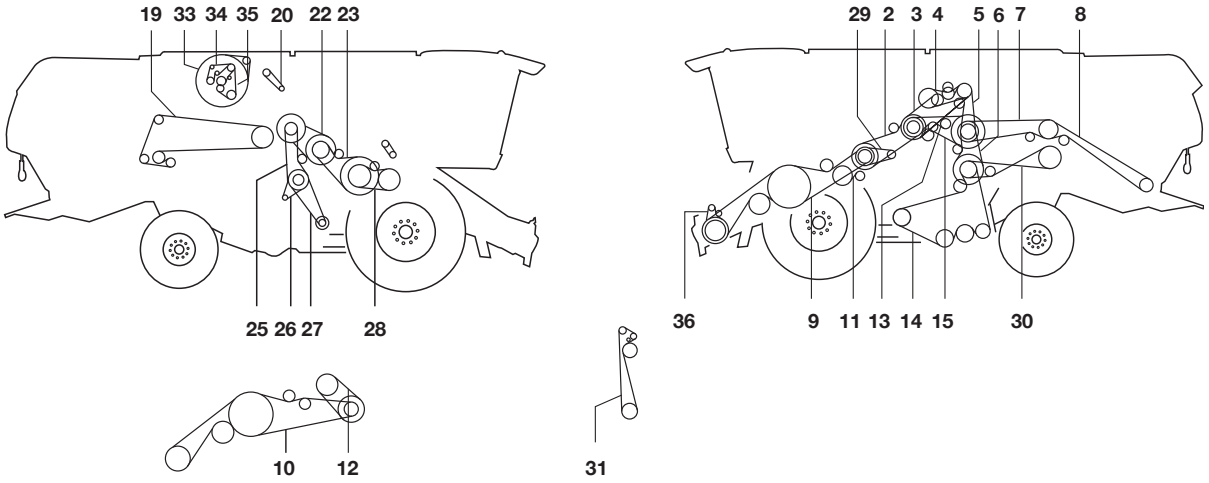

			OE	
2	CUTTERBAR DRIVE, 1STE STAGE	1	644892.0	1424282
3	THRESHING MECHANISM AT CATERPILLAR C13, C10	1	667881.0	1499431
3	THRESHING MECHANISM ENGINE C9	1	352403.0	1426293
3	THRESHING MECHANISM ENGINE 3126B, C6.6	1	667453.0	1426293
4	DISCHARGE DRIVE GRAIN TANK	1	667250.0	1423210
5	CHOPPER DRIVE - 1ST STAGE AT MOTOR C13, C10, C9 AND 3126B	1	667958.3	1423216
5	CHOPPER DRIVE - 1ST STAGE AT MOTOR C6.6	1	355696.0	1423214
6	SIEVE PAN DRIVE - 2ND STAGE	1	667252.0	1423240
7	CHOPPER DRIVE - 2ND STAGE	1	061700.1	1423319
8	CHOPPER DRIVE - 3RD STAGE RIGID CHOPPER	1	628888.0	1423400
9	CUTTERBAR DRIVE, 2ND STAGE WITHOUT VARIABLE SPEED DRIVE	2	667454.1	1402549
10	CUTTERBAR DRIVE, 3RD STAGE WITH VARIABLE SPEED DRIVE	2	667551.2	1402587
11	SYNCHRONOUS DRIVE	1	667249.0	1423196
12	CUTTERBAR DRIVE WITH VARIABLE SPEED DRIVE	1	667530.1	1463300
13	CHAFF SPREADER DRIVE	1	746508.3	0201155
14	CLEANING - 3RD STAGE	1	667651.1	0423458
15	CLEANING - 1ST STAGE	1	644209.2	0102250
19	FINGER ROLLER	1	628991.0	1401499
20	ELEVATOR DRIVE GRAIN	1	754315.1	Chain
22	DRUM DRIVE VARIABLE SPEED	1	667248.0	1453293
23	DRUM DRIVE	1	176442.1	2124287
25	FAN DRIVE	4	746506.0	0101222
26	SUCTION FAN	1	644781.0	0200118
27	FAN DRIVE VARIABLE SPEED	1	667457.0	1410203
28	PRE-DRUM DRIVE	1	667251.1	1423224
29	HYDRAULIC REEL PUMP DRIVE	1	829094.0	1401137
30	STRAW WALKER DRIVE	1	667477.0	0101311
31	STRAW SPREADER DRIVE	1	539443.0	1499395
33	RADIATOR SCREEN - 2ND STAGE	1	545689.0	0300225
34	ENGINE C9 EMISSION STANDARD 2	1	796786.0	1485332
34	ENGINE 3126 B	1	796474.0	0385331
35	FAN DRIVE - ENGINE C10, C13 (FROM NR. 58401487)	1	628964.1	1485350
35	FAN DRIVE (UP TO NR. 58401486)	1	743910.1	0285317
35	FAN DRIVE - ENGINE 3126B AND AT C9-EMISSION STANDARD	1	796450.0	0242166
35	FAN DRIVE C9-EXHAUST LEVEL 3A	1	584627.1	0785285
35	FAN DRIVE AT MOTOR C6.6	1	580157.0	0785276
36	SUCTION BLOWER E.-CHANNEL	1	765985.0	1900123

LEXION 550 MONTANA

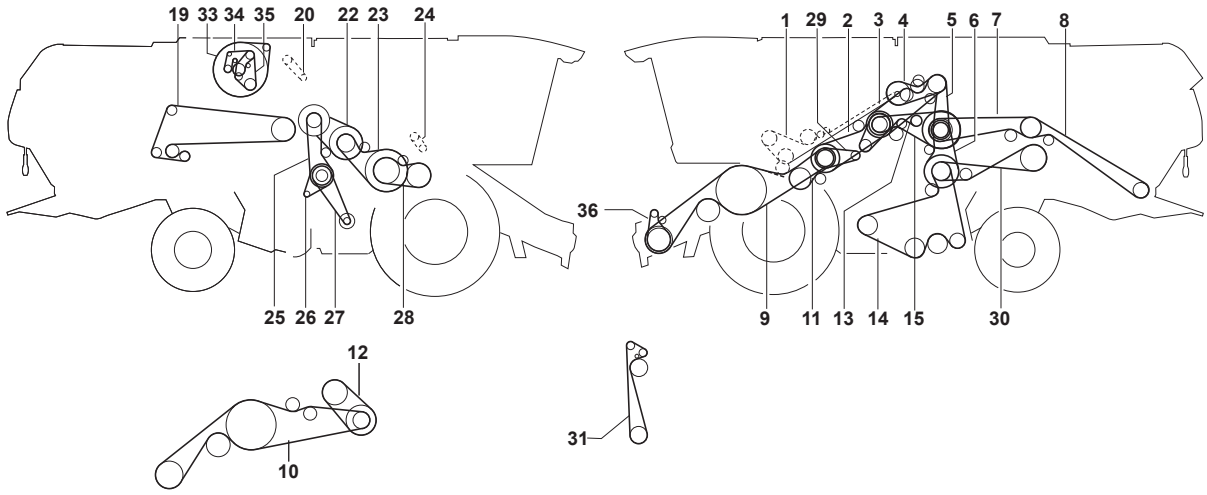

1	GRAIN TANK UNLOADING	1	755508.0	Chain
1	EXTRA WEAR - PROOF	1	758710.0	Chain
2	CUTTERBAR DRIVE 1STE STAGE	1	644892.0	1424282
3	THRESHING MECHANISM DRIVE ENGINE C10	1	667881.0	1499431
3	THRESHING MECHANISM DRIVE ENGINE C9	1	352403.0	1426293
4	GRAIN TANK UNLOADING	1	667250.0	1423210
5	CHOPPER DRIVE 1STE STAGE	1	667958.3	1423216
6	SIEVE PAN 2ND STAGE	1	667252.0	1423240
7	CHOPPER DRIVE, 2ND STAGE	1	061700.1	1423319
8	CHOPPER DRIVE, 3RD STAGE RIGID CHOPPER	1	628888.0	1423400
9	CUTTERBAR DRIVE, 2ND STAGE WITHOUT VARIABLE SPEED DRIVE	2	667454.1	1402549
10	CUTTERBAR DRIVE 3RD STAGE WITH VARIABLE SPEED DRIVE	2	667551.2	1402587
11	SYNCHRONOUS DRIVE	1	667249.0	1423196
12	CUTTERBAR VARIATOR	1	667530.1	1463300
13	CHAFF SPREADER	1	746508.3	0201155
14	CLEANING 3RD STAGE	1	667651.1	0423458
15	CLEANING 1STE STAGE	1	644209.2	0102250
19	FINGER ROLLER	1	628991.0	1401499
20	GRAIN ELEVATOR	1	754315.1	Chain
22	DRUM VARIATOR	1	667248.0	1453293
23	DRUM DRIVE	1	176442.1	2124287
24	RETURNS ELEVATOR	1	642492.0	Chain
25	FAN DRIVE	4	746506.0	0101222
26	SUCTION FAN	1	644781.0	0200118
27	FAN VARIATOR	1	667457.0	1410203
28	PRE - DRUM DRIVE	1	667251.1	1423224
29	HYDRAULIC REEL DRIVE	1	829094.0	1401137
30	STRAW WALKER DRIVE	1	667477.0	0101311
31	STRAW SPREADER	1	539443.0	1499395
33	RADIATOR SCREEN 2ND STAGE	1	545689.0	0300225
34	ENGINE C9	1	796786.0	1485332
35	FAN DRIVE ENGINE C10 FROM NO. 58000036	1	628964.1	1485350
35	FAN DRIVE ENGINE C10 TO NO. 58000035	1	743910.1	0285317
35	FAN DRIVE C9 EMISSION STANDARD 2	1	796450.0	0242166
35	FAN DRIVE C9 EXHAUST LEVEL 3A	1	584627.1	0785285
36	SUCTION BLOWER E - CHANNEL	1	765985.0	1900123

LEXION 560 MONTANA

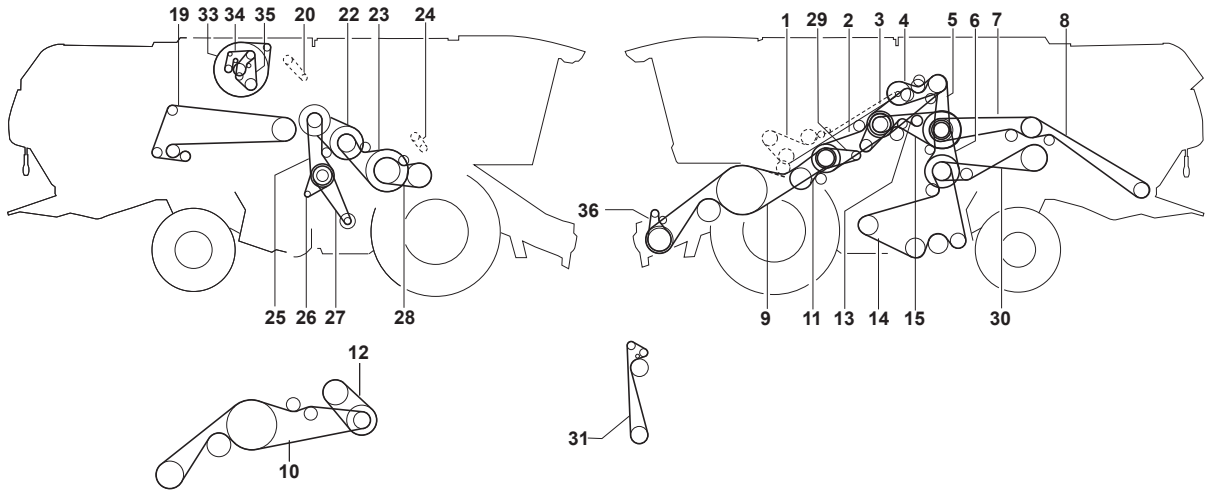

1	GRAIN TANK UNLOADING	1	755508.0	Chain
1	EXTRA WEAR - PROOF	1	758710.0	Chain
2	CUTTERBAR DRIVE 1STE STAGE	1	644892.0	1424282
3	THRESHING MECHANISM DRIVE ENGINE C10	1	667881.0	1499431
3	THRESHING MECHANISM DRIVE ENGINE C9	1	352403.0	1426293
4	GRAIN TANK UNLOADING	1	667250.0	1423210
5	CHOPPER DRIVE 1STE STAGE	1	667958.3	1423216
6	SIEVE PAN 2ND STAGE	1	667252.0	1423240
7	CHOPPER DRIVE, 2ND STAGE	1	061700.1	1423319
8	CHOPPER DRIVE, 3RD STAGE RIGID CHOPPER	1	628888.0	1423400
9	CUTTERBAR DRIVE, 2ND STAGE WITHOUT VARIABLE SPEED DRIVE	2	667454.1	1402549
10	CUTTERBAR DRIVE 3RD STAGE WITH VARIABLE SPEED DRIVE	2	667551.2	1402587
11	SYNCHRONOUS DRIVE	1	667249.0	1423196
12	CUTTERBAR VARIATOR	1	667530.1	1463300
13	CHAFF SPREADER	1	746508.3	0201155
14	CLEANING 3RD STAGE	1	667651.1	0423458
15	CLEANING 1STE STAGE	1	644209.2	0102250
19	FINGER ROLLER	1	628991.0	1401499
20	GRAIN ELEVATOR	1	754315.1	Chain
22	DRUM VARIATOR	1	667248.0	1453293
23	DRUM DRIVE	1	176442.1	2124287
24	RETURNS ELEVATOR	1	642492.0	Chain
25	FAN DRIVE	4	746506.0	0101222
26	SUCTION FAN	1	644781.0	0200118
27	FAN VARIATOR	1	667457.0	1410203
28	PRE - DRUM DRIVE	1	667251.1	1423224
29	HYDRAULIC REEL DRIVE	1	829094.0	1401137
30	STRAW WALKER DRIVE	1	667477.0	0101311
31	STRAW SPREADER	1	539443.0	1499395
33	RADIATOR SCREEN 2ND STAGE	1	545689.0	0300225
34	ENGINE C9	1	796786.0	1485332
35	FAN DRIVE ENGINE C10 FROM NO. 58000036	1	628964.1	1485350
35	FAN DRIVE ENGINE C10 TO NO. 58000035	1	743910.1	0285317
35	FAN DRIVE C9 EMISSION STANDARD 2	1	796450.0	0242166
35	FAN DRIVE C9 EXHAUST LEVEL 3A	1	584627.1	0785285
36	SUCTION BLOWER E - CHANNEL	1	765985.0	1900123

LEXION 570

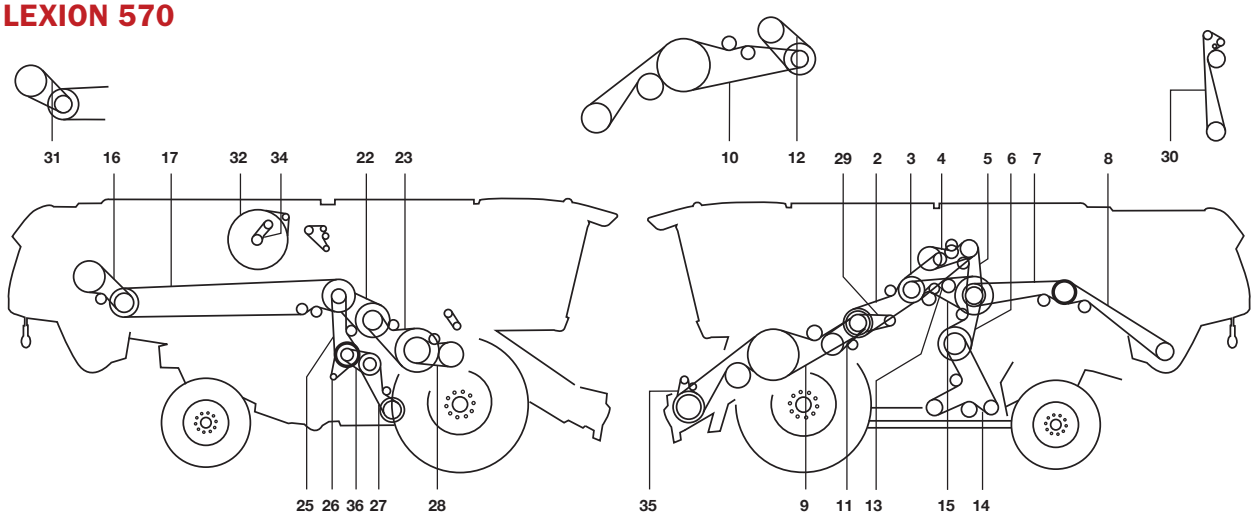

			OE	
2	CUTTERBAR DRIVE, 1STE STAGE	1	644892.0	1424282
3	THRESHING MECHANISM DRIVE	1	667452.1	1449337
4	DISCHARGE DRIVE GRAIN TANK	1	667250.0	1423210
5	CHOPPER DRIVE - 1ST STAGE	1	667958.3	1423216
6	SIEVE PAN DRIVE - 2ND STAGE (FROM NR. 58500163-58500093-107)	1	644902.0	1423292
6	TO NR. 58500092 -NR. 58500108-162	1	667252.0	1423240
7	CHOPPER DRIVE - 2ND STAGE	1	061700.1	1423319
8	CHOPPER DRIVE - 3RD STAGE	1	628978.0	1423361
9	CUTTERBAR DRIVE, 2ND STAGE WITHOUT VARIABLE SPEED DRIVE	2	667454.1	1402549
10	CUTTERBAR DRIVE, 3RD STAGE WITH VARIABLE SPEED DRIVE	2	667551.2	1402587
11	SYNCHRONOUS DRIVE	1	667249.0	1423196
12	CUTTERBAR DRIVE WITH VARIABLE SPEED DRIVE	1	667530.1	1463300
13	CHAFF SPREADER DRIVE	1	746508.3	0201155
14	CLEANING - 3RD STAGE (FROM NR. 58500163-58500093-107)	1	756466.0	1423364
14	CLEANING (TO NR. 58500092 - NR. 58500108-162)	1	667651.1	0423458
15	CLEANING - 1ST STAGE	1	644209.2	0102250
16	HYBRID DRIVE - 2ND STAGE (FROM NR. 58500163)	1	628792.0	0224234
16	HYBRID DRIVE - 2ND STAGE (UP TO NR. 58500162)	1	749895.0	0224223 EE-TECH
17	HYBRID DRIVE - 1ST STAGE	1	749886.1	1424641
22	DRUM DRIVE VARIABLE SPEED	1	667248.0	1453293
23	DRUM DRIVE	1	176442.1	2124287
25	FAN DRIVE (FROM NR. 58500163-NR. 58500093-107)	1	667957.0	1401208
25	FAN DRIVE (TO NR. 58500092 -NR. 58500108-162)	4	746506.0	0101222
26	SUCTION BLOWER (FROM NR. 58500163-NR. 58500093-107)	1	667367.0	0272247
26	SUCTION BLOWER (TO NR. 58500092 -NR. 58500108-162)	1	644781.0	0200118
27	FAN DRIVE VARIABLE SPEED (FROM NR. 58500163-NR. 58500093-107)	1	744785.0	1401216
27	FAN DRIVE VARIABLE SPEED (TO NR. 58100092 - NR. 58500108-162)	1	667457.0	1410203
28	PRE-DRUM DRIVE	1	667251.1	1423224
29	HYDRAULIC REEL PUMP DRIVE	1	829094.0	1401137
30	STRAW SPREADER DRIVE	1	539443.0	1499395
31	HYBRID DRIVE - 2ND STAGE (FROM NR. 58500163)	1	744965.0	1453965
31	HYBRID VARIABLE SPEED DRIVE (UP TO NR. 58500162)	1	667248.0	1453293
32	RADIATOR SCREEN - 2ND STAGE	1	545689.0	0300225
34	FAN DRIVE (FROM NR. 58500253)	1	628964.1	1485350
34	FAN DRIVE (UP TO NR. 58500252)	1	743910.1	0285317
35	SUCTION BLOWER E.-CHANNEL	1	765985.0	1900123
36	FROM NR. 58500163-NR. 58500093-107	1	628847.1	1413847

LEXION 570 MONTANA

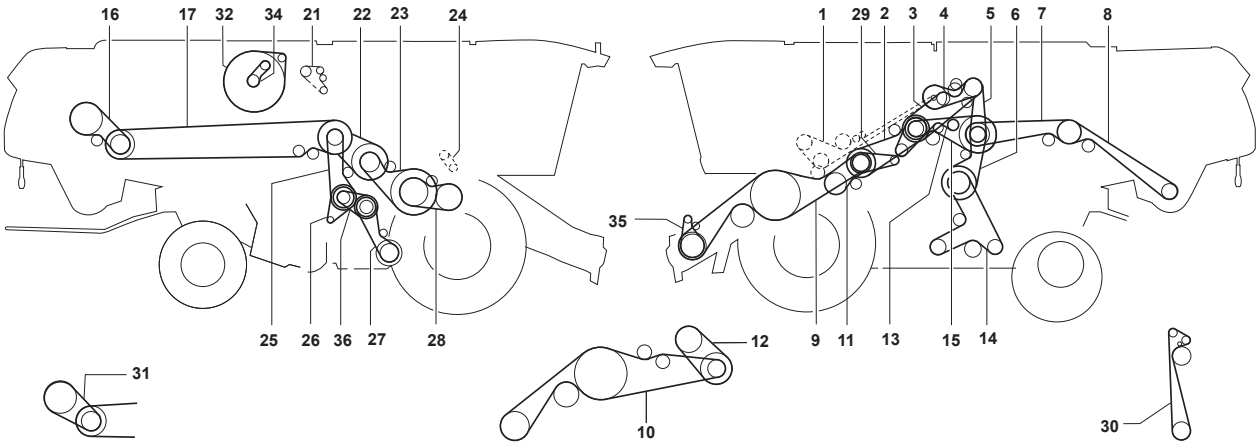

			OE	
1	GRAIN TANK UNLOADING	1	755508.0	Chain
1	EXTRA WEAR - PROOF	1	758710.0	Chain
2	CUTTERBAR DRIVE, 1STE STAGE	1	644892.0	1424282
3	THRESHING MECHANISM DRIVE	1	667452.1	1449337
4	GRAIN TANK UNLOADING	1	667250.0	1423210
5	CHOPPER DRIVE 1STE STAGE	1	667958.3	1423216
6	SIEVE PAN 2ND STAGE FROM NO. 58100038	1	644902.0	1423292
6	TO NO. 58100037	1	667252.0	1423240
7	CHOPPER DRIVE, 2ND STAGE FROM NO. 58100187	1	644889.0	1423319
7	CHOPPER DRIVE, 2ND STAGE TO NO. 58100186	1	061700.1	1423319
8	CHOPPER DRIVE, 3RD STAGE	1	628978.0	1423361
9	CUTTERBAR DRIVE, 2ND STAGE WITHOUT VARIABLE SPEED DRIVE	2	667454.1	1402549
10	CUTTERBAR DRIVE 3RD STAGE WITH VARIABLE SPEED DRIVE	2	667551.2	1402587
11	SYNCHRONOUS DRIVE	1	667249.0	1423196
12	CUTTERBAR VARIATOR	1	667530.1	1463300
13	CHAFF SPREADER	1	746508.3	0201155
14	CLEANING, 3RD STAGE FROM NO. 58100038	1	756466.0	1423364
14	TO NO. 58100037	1	667651.1	0423458
15	CLEANING 1STE STAGE	1	644209.2	0102250
16	HYBRID DRIVE 2ND STAGE FROM NO. 58100038	1	628792.0	0224234
16	HYBRID DRIVE 2ND STAGE TO NO. 58100037	1	749895.0	0224223 EE-TECH
17	HYBRID DRIVE 1STE FROM NO. 58100038	1	644961.0	1424647
17	TO NO. 58100037	1	749886.1	1424641
21	GRAIN ELEVATOR	1	754315.1	Chain
22	DRUM VARIATOR	1	667248.0	1453293
23	DRUM DRIVE	1	176442.1	2124287
24	RETURNS ELEVATOR	1	642492.0	Chain
25	FAN DRIVE FROM NO. 58100038	1	667957.0	1401208
25	TO NO. 58100037	4	746506.0	0101222
26	SUCTION BLOWER FROM NO. 58100038	1	667367.0	0272247
26	TO NO. 58100037	1	644781.0	0200118
27	FAN VARIATOR FROM NO. 58100038	1	744785.0	1401216

LEXION 570 MONTANA (CONTINUED)

			OE	
27	TO NO. 58100037	1	667457.0	1410203
28	PRE - DRUM DRIVE	1	667251.1	1423224
29	HYDRAULIC REEL DRIVE	1	829094.0	1401137
30	STRAW SPREADER	1	539443.0	1499395
31	HYBRID DRIVE 2ND STAGE	1	744965.0	1453965
31	FROM NO. 58100038	1	667248.0	1453293
32	HYBRID VARIABLE SPEED DRIVE TO NO. 58100037	1	545689.0	0300225
34	RADIATOR SCREEN 2ND STAGE	1	628964.1	1485350
34	FAN DRIVE FROM NO. 58100038	1	743910.1	0285317
35	FAN DRIVE TO NO. 58100037	1	765985.0	1900123
36	SUCTION BLOWER E - CHANNEL FROM NO. 58100038	1	628847.1	1413847

LEXION 580

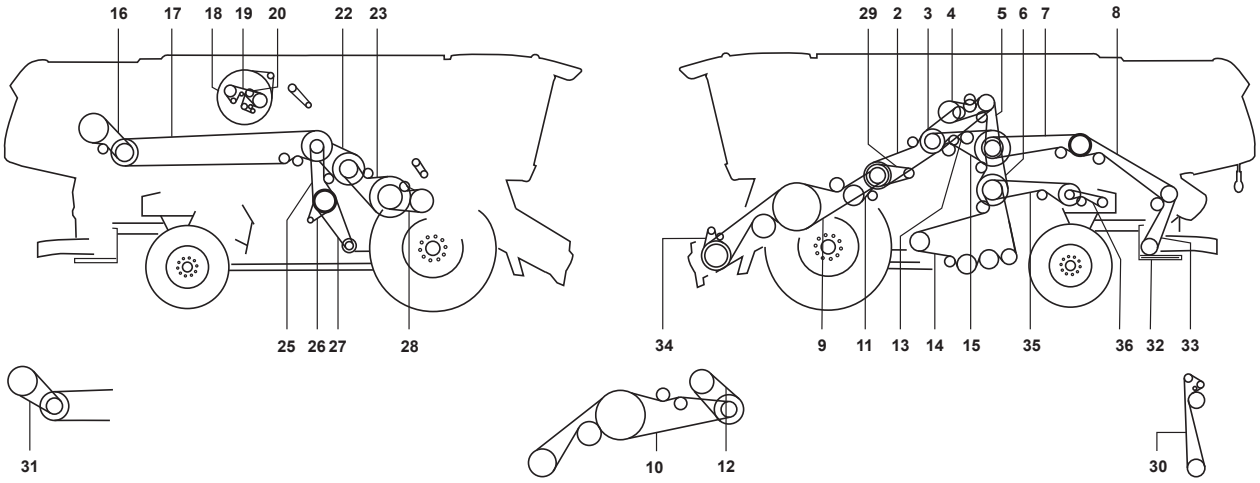

			OE	
2	CUTTERBAR DRIVE, 1STE STAGE	1	644892.0	1424282
3	THRESHING MECHANISM DRIVE	1	644884.0	1499431
4	DISCHARGE DRIVE GRAIN TANK	1	667981.2	1423211
5	CHOPPER DRIVE - 1ST STAGE	1	644885.0	1424219
6	SIEVE PAN DRIVE - 2ND STAGE	1	667252.0	1423240
7	CHOPPER DRIVE - 2ND STAGE	1	644889.0	1423319
8	CHOPPER DRIVE - 3RD STAGE ONLY FOR RICE	1	628978.0	1423361
8	STRENGTHENED DRIVE	1	644890.0	1423329
9	CUTTERBAR DRIVE, 2ND STAGE WITHOUT VARIABLE SPEED DRIVE	2	667454.1	1402549
10	CUTTERBAR DRIVE, 3RD STAGE WITH VARIABLE SPEED DRIVE	2	667551.2	1402587
11	SYNCHRONOUS DRIVE	1	667249.0	1423196
12	CUTTERBAR DRIVE WITH VARIABLE SPEED DRIVE	1	667530.1	1463300
13	AT CHAFF-, STRAW- AND RADIAL SPREADER	1	746508.3	0201155
13	AT SPREADER FAN	1	233843.1	1401127
14	CLEANING - 3RD STAGE	1	644866.0	1323464
15	CLEANING - 1ST STAGE	1	644209.2	0102250
16	HYBRID DRIVE - 2ND STAGE (FROM NR. 58600057)	1	628792.0	0224234
16	HYBRID DRIVE - 2ND STAGE (UP TO NR. 58600056)	1	749895.0	0224223 EE-TECH
17	HYBRID DRIVE - 1ST STAGE	1	749886.1	1424641
18	RADIATOR SCREEN - 2ND STAGE	1	545689.0	0300225
19	FAN DRIVE	1	628964.1	1485350
20	ENGINE	1	744873.0	1442229
22	DRUM DRIVE VARIABLE SPEED	1	667248.0	1453293
23	DRUM DRIVE	1	644965.0	2124287
25	FAN DRIVE	4	746506.0	0101222
26	SUCTION FAN	1	644781.0	0200118
27	FAN DRIVE VARIABLE SPEED	1	667457.0	1410203
28	PRE-DRUM DRIVE	1	667251.1	1423224
29	HYDRAULIC REEL PUMP DRIVE	1	829094.0	1401137
30	STRAW SPREADER DRIVE	1	539443.0	1499395
31	HYBRID VARIABLE SPEED DRIVE (FROM NR. 58600057)	1	744965.0	1453965
31	HYBRID VARIABLE SPEED DRIVE (UP TO NR. 58600056)	1	667248.0	1453293
32	SPREADER FAN - 2ND STAGE	1	667891.1	1469483
33	SPREADER FAN - 1ST STAGE (FROM NR. 58600862)	1	667252.0	1423240
33	SPREADER FAN - 1ST STAGE (TO NR. 58600861)	1	644942.0	1402293
34	SUCTION BLOWER E.-CHANNEL	1	765985.0	1900123
35	FEEDER BASE	1	661425.0	0201264
36	FEEDER BASE	1	758719.0	1401122

LEXION 580 R AUSTRALIA

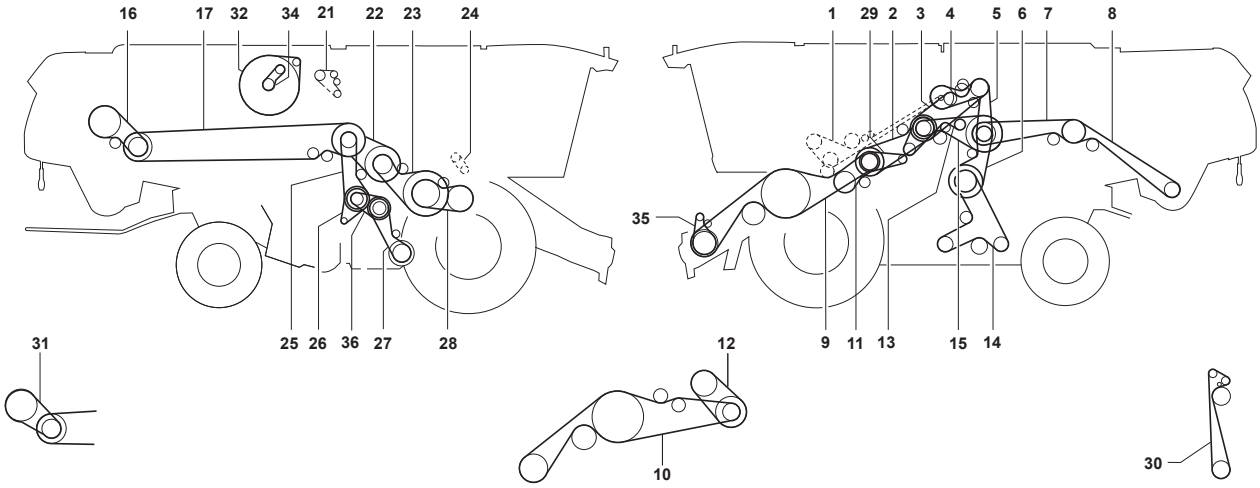

			OE	
1	GRAIN TANK UNLOADING	1	785868.0	☎
2	CUTTERBAR DRIVE, 1STE STAGE	1	644892.0	1424282
3	THRESHING MECHANISM DRIVE	1	667452.1	1449337
4	GRAIN TANK UNLOADING	1	667250.0	1423210
5	CHOPPER DRIVE 1STE STAGE	1	667958.3	1423216
6	SIEVE PAN 2ND STAGE	1	644902.0	1423292
7	CHOPPER DRIVE, 2ND STAGE	1	644890.0	1423329
8	CHOPPER DRIVE, 3RD STAGE	1	355658.0	1423364
9	CUTTERBAR DRIVE, 2ND STAGE WITHOUT VARIABLE SPEED DRIVE	2	667454.1	1402549
10	CUTTERBAR DRIVE 3RD STAGE WITH VARIABLE SPEED DRIVE	2	667551.2	1402587
11	SYNCHRONOUS DRIVE	1	667249.0	1423196
12	CUTTERBAR VARIATOR	1	667530.1	1463300
13	CHAFF SPREADER	1	746508.3	0201155
14	CLEANING 3RD STAGE	1	756466.0	1423364
15	CLEANING 1STE STAGE	1	644209.2	0102250
16	HYBRID DRIVE 2ND STAGE	1	628792.0	0224234
17	HYBRID DRIVE 1STE STAGE	1	644961.0	1424647
21	GRAIN ELEVATOR	1	795266.0	☎
22	DRUM VARIATOR	1	667248.0	1453293
23	DRUM DRIVE	1	176442.1	2124287
24	RETURNS ELEVATOR	1	642492.0	Chain
25	FAN DRIVE 1STE STAGE	1	667957.0	1401208
26	SUCTION FAN	1	667367.0	0272247
27	FAN DRIVE 3RD STAGE	1	744785.0	1401216
28	PRE - DRUM DRIVE	1	667251.1	1423224
29	HYDRAULIC REEL DRIVE	1	829094.0	1401137
30	STRAW SPREADER	1	539443.0	1499395
31	HYBRID DRIVE, 2ND STAGE	1	744965.0	1453965
32	RADIATOR SCREEN 2ND STAGE	1	545689.0	0300225
34	FAN DRIVE	1	628964.1	1485350
35	SUCTION BLOWER E - CHANNEL	1	765985.0	1900123
36	FAN VARIABLE SPEED DRIVE 2ND STAGE	1	628847.1	1413847

LEXION 600

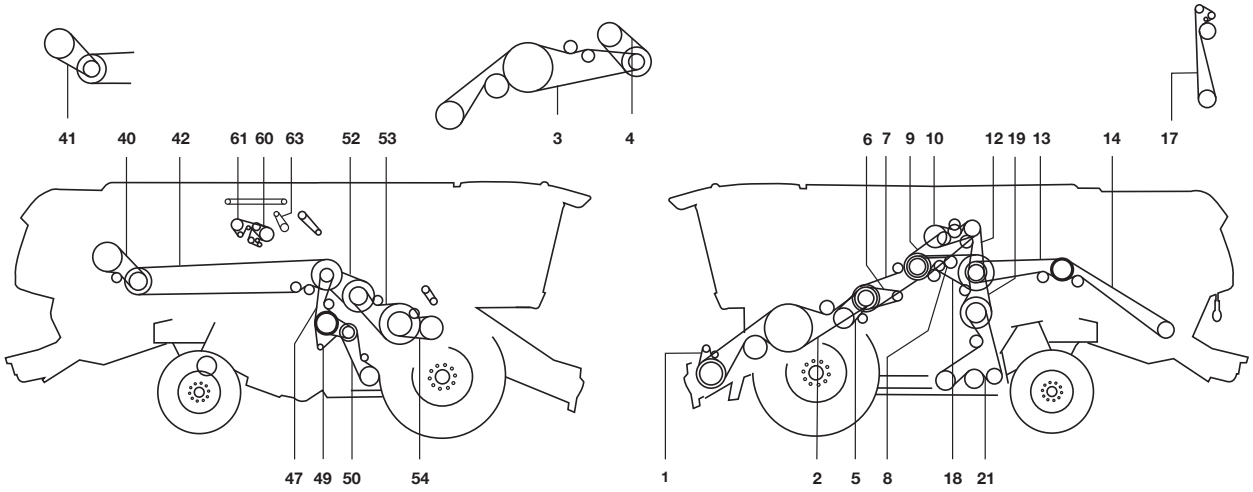

1	SUCTION BLOWER E.-CHANNEL	1	765985.0	1900123
2	CUTTERBAR DRIVE, 2ND STAGE WITHOUT VARIABLE SPEED DRIVE	3	628579.1	1402550
3	CUTTERBAR DRIVE, 3RD STAGE WITH VARIABLE SPEED DRIVE	3	628779.1	1402588
4	CUTTERBAR DRIVE, 2ND STAGE WITH VARIABLE SPEED DRIVE	1	744870.0	1414210
5	IMPELLER DRUM DRIVE	1	667249.0	1423196
6	HYDRAULIC REEL PUMP DRIVE	1	829094.0	1401137
7	CUTTERBAR DRIVE - 1ST STAGE B06 / 10 - STANDARD	1	644892.0	1424282
7	CUTTERBAR DRIVE - 1ST STAGE B06 / 20 - VARIATOR	1	749859.0	1425275
8	AT CHAFF-, STRAW- AND RADIAL SPREADER	1	746508.3	0201155
9	THRESHING MECHANISM DRIVE	1	644884.0	1499431
10	DISCHARGE DRIVE GRAIN TANK - 1ST STAGE	1	667981.2	1423211
12	CHOPPER DRIVE - 1ST STAGE	1	644885.0	1424219
13	CHOPPER DRIVE - 2ND STAGE	1	644889.0	1423319
14	CHOPPER DRIVE - 3RD STAGE ONLY FOR RICE	1	628978.0	1423361
17	STRAW SPREADER DRIVE	1	539443.0	1499395
18	SIEVE PAN DRIVE - 1ST STAGE	1	644209.2	0102250
19	SIEVE PAN DRIVE - 2ND STAGE	1	644902.0	1423292
21	SIEVE PAN DRIVE 2RD STAGE	1	756466.0	1423364
40	HYBRID DRIVE - 2ND STAGE	1	628792.0	0224234
41	HYBRID VARIABLE SPEED - 2ND STAGE	1	744965.0	1453965
42	HYBRID DRIVE - 1ST STAGE	1	749886.1	1424641
47	FAN DRIVE - 1ST STAGE	1	667957.0	1401208
49	BLOWER VARIABLE SPEED - 2ND STAGE	1	628847.1	1413847
50	FAN DRIVE - 3RD STAGE	1	744785.0	1401216
52	THRESHING MECHANISM DRIVE	1	744965.0	1453965
53	DRUM DRIVE	1	644965.0	2124287
54	PRE-DRUM DRIVE	1	667251.1	1423224
60	ENGINE	1	744873.0	1442229
61	FAN DRIVE	1	628964.1	1485350
63	SUCTION FAN	1	744874.1	0172189

LEXION 670

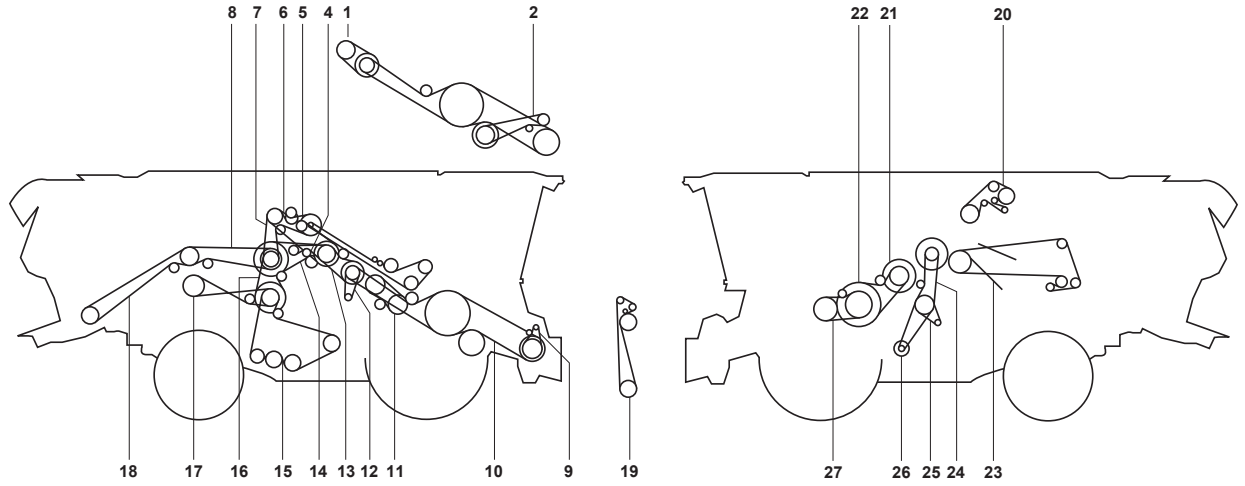

			OE	
1		1	665833.0	1424215
2		1	665999.2	1400181
4		1	746508.3	0201155
5		1	660587.0	1474387
6		1	660762.1	1423220
7		1	660315.0	0323219
8		1	644889.0	1423319
9		1	325728.0	1900123
10		1	665798.0	1402606
10		1	665827.1	1424641
11		1	667249.0	1423196
12		1	746508.3	0201155
12		1	775698.0	1401161
13		1	665957.1	0714203
14		1	644209.2	0102250
15		1	667651.0	0423458
16		1	667252.0	1423240
17		1	670796.0	1401310
18		1	628888.0	1423400
18		1	670723.0	1623401
19		1	539443.0	1499395
20		1	628964.1	1485350
21		1	667248.0	1453293
21		1	744965.0	1453965
22		1	176442.1	2124287
22		1	644965.0	2124287
23		1	628991.0	1401499
24		1	746506.0	0101222
25		1	660962.0	1400114
26		1	667457.0	1410203
27		1	667251.1	1423224

LEXION 740

			OE	
1		1	176442.1	2124287
2		1	325728.0	1900123
3		1	545689.0	0300225
4		3	628779.1	1402588
5		1	628792.0	0224234
6		1	628964.1	1485350
7		1	628978.0	1423361
8		1	644209.2	0102250
9		1	644889.0	1423319
10		1	644892.0	1424282
11		1	644902.0	1423292
12		1	644961.0	1424647
13		1	660315.0	0323219
14		1	660382.0	1485353
15		1	660488.0	1501193
16		1	660554.0	1449340
17		1	660566.0	1401207
18		1	660762.1	1423220
19		1	660961.0	1300104
20		1	661244.0	1400119
21		1	667248.0	1453293
22		1	667249.0	1423196
23		1	667251.1	1423224
24		2	667454.1	1402549
25		1	667530.1	1463300
26		2	667551.2	1402587
27		1	670724.0	1423362
28		1	670835.0	1400420
29		1	744965.0	1453965
30		1	749886.1	1424641
31		1	756466.0	1423364
32		1	980851.0	1424227

LEXION 750

			OE	
1		1	176442.1	2124287
2		1	325728.0	1900123
3		1	545689.0	0300225
4		3	628779.1	1402588
5		1	628792.0	0224234
6		1	628964.1	1485350
7		1	628978.0	1423361
8		1	644209.2	0102250
9		1	644889.0	1423319
10		1	644892.0	1424282
11		1	644902.0	1423292
12		1	644961.0	1424647
13		1	660315.0	0323219
14		1	660382.0	1485353
15		1	660488.0	1501193
16		1	660554.0	1449340
17		1	660566.0	1401207
18		1	660762.1	1423220
19		1	660961.0	1300104
20		1	661244.0	1400119
21		1	667248.0	1453293
22		1	667249.0	1423196
23		1	667251.1	1423224
24		2	667454.1	1402549
25		1	667530.1	1463300
26		2	667551.2	1402587
27		1	670724.0	1423362
28		1	744965.0	1453965
29		1	749886.1	1424641
30		1	756466.0	1423364
31		1	980851.0	1424227

LEXION 770

			OE	
1		1	325728.0	1900123
2		1	355658.0	1423364
3		1	570195.2	0323219
4		1	628792.0	0224234
5		1	628847.1	1413847
6		1	628964.1	1485350
7		1	628978.0	1423361
8		1	644209.2	0102250
9		1	644781.0	0200118
10		1	644884.0	1499431
11		1	644889.0	1423319
12		1	644890.0	1423329
13		1	644902.0	1423292
14		1	644965.0	2124287
15		1	660587.0	1474387
16		1	660762.1	1423220
17		2	665798.0	1402606
18		1	665824.0	1425660
19		1	665901.1	☎
20		1	665999.2	1400181
21		1	667249.0	1423196
22		1	667251.1	1423224
23		1	667367.0	0272247
24		1	667957.0	1401208
25		1	670724.0	1423362
26		1	670999.2	0700147
27		2	742206.0	1401164
28		1	744785.0	1401216
29		1	744965.0	1453965
30		1	746508.3	0201155
31		1	775698.0	1401161

LEXION 780

			OE	
1		1	325728.0	1900123
2		1	355658.0	1423364
3		1	570195.2	0323219
4		1	628792.0	0224234
5		1	628847.1	1413847
6		1	628964.1	1485350
7		1	628978.0	1423361
8		1	644209.2	0102250
9		1	644781.0	0200118
10		1	644884.0	1499431
11		1	644889.0	1423319
12		1	644890.0	1423329
13		1	644902.0	1423292
14		1	644965.0	2124287
15		1	660587.0	1474387
16		1	660762.1	1423220
17		2	665798.0	1402606
18		1	665824.0	1425660
19		1	665901.1	☎
20		1	665999.2	1400181
21		1	667249.0	1423196
22		1	667251.1	1423224
23		1	667367.0	0272247
24		1	667957.0	1401208
25		1	670724.0	1423362
26		1	670999.2	0700147
27		2	742206.0	1401164
28		1	744785.0	1401216
29		1	744965.0	1453965
30		1	746508.3	0201155
31		1	775698.0	1401161

MATADOR - STANDARD - GIGANT

			OE	
1	TURNING DRUM DRIVE	1	610197.0	0330292
2	TURNING DRUM DRIVE	1	500863.0	1430287
3	COUNTERSHAFT - BALER	1	551068.0	1430400
4	MAIN DRIVE	1	630144.0	1403323
5	RADIATOR FAN DRIVE	1	610835.0	/
5	RADIATOR FAN DRIVE	1	610196.0	/
5	RADIATOR FAN DRIVE	1	653121.0	/
6	KNIFE DRIVE	1	610833.1	1401271
7	CYLINDER	2	617309.2	1403254
8	SIEVE BOX	1	523252.0	1430352
9		1	630043.0	/
9		1	630025.0	/
10	HYDRAULIC PUMP DRIVE	1	767057.1	0101099
11	SIEVE BOX	1	772658.0	1430746
12	REEL DRIVE VARIABLE SPEED	1	778561.1	1459199
13	PICK UP DRIVE	1	800309.0	2301174
14	DRIVE GRAIN TANK	1	636021.1	1430202
14	DRIVE GRAIN TANK	1	636021.1	1430202
15	TRACTION DRIVE	1	630156.0	1478450
16	DRUM DRIVE VARIABLE SPEED	1	750294.0	2001143
17	STRAW SHAKER	1	801222.0	1401231

MEDION 310 - 320

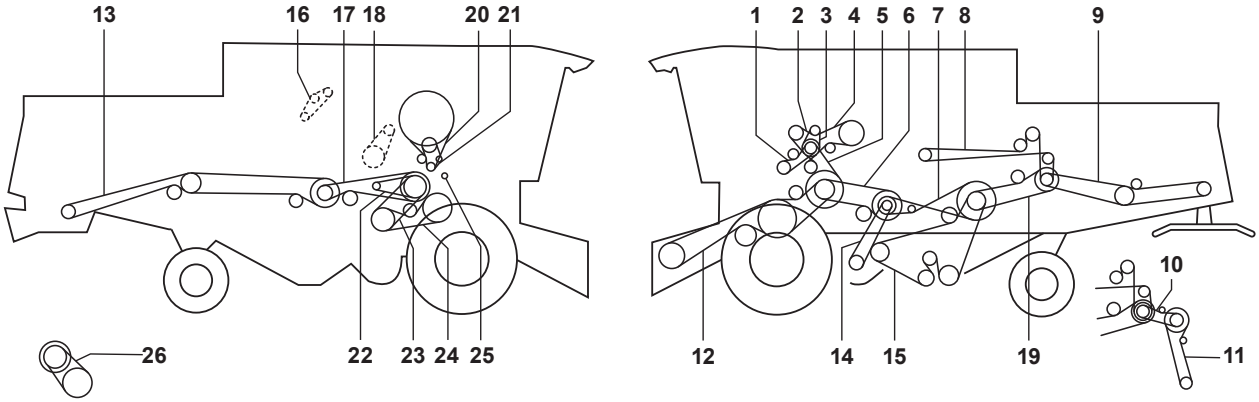

			OE	
1		1	644016.1	1424181
2		1	656028.0	0201109
3		1	621903.1	1443151
4		1	660409.1	1423198
6		1	603337.0	0202222
7		1	603336.1	1429345
9		1	623427.1	1401378
10		1	755070.2	1601120
13		1	061214.0	1402609
13		1	061353.1	1402622
14		1	671209.0	1459293
15		2	603017.3	1402436
19		1	506671.2	1454323
20		1	545689.0	0300225
21		1	056961.0	1900106
22		1	644448.1	1200149
23		1	609823.0	1414208
24		1	661220.1	1424259
26		1	661429.0	1499328

MEDION 330

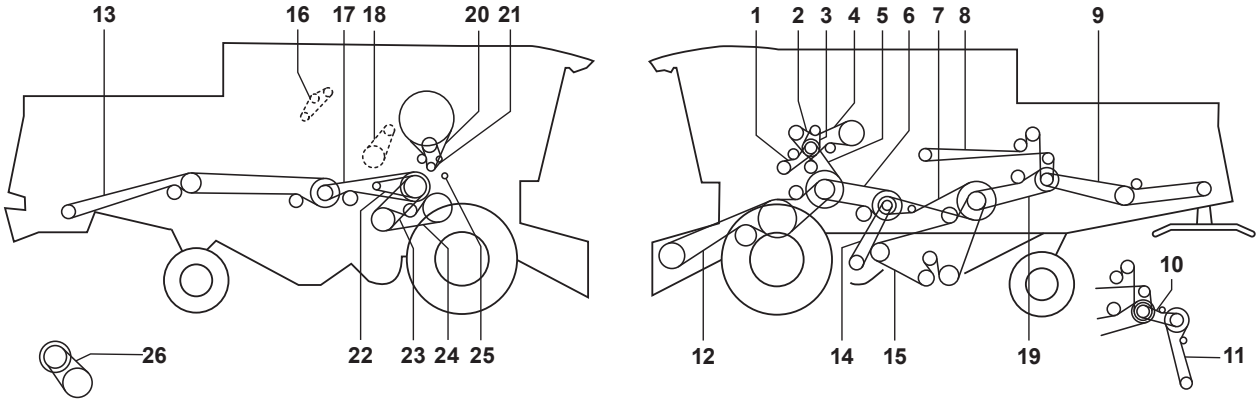

			OE	
1		1	644016.1	1424181
2		1	656028.0	0201109
3		1	621903.1	1443151
4	WITH MERCEDES OM 906 LA	1	544166.0	0223201
4	WITH PERKINS 1006-6 TA	1	660409.1	1423198
5	WITH MERCEDES OM 906 LA	1	544164.0	1425257
5	WITH PERKINS 1006-6 TA	1	544114.1	1424251
6		1	603337.0	0202222
7		1	603336.1	1429345
8		1	644447.0	1401412
9		1	623427.1	1401378
10		1	755070.2	1601120
11	N = 519	1	066034.0	1901188
11	N = 660	1	785341.0	1401180
12		2	661301.1	1402451
13		1	061353.1	1402622
13	FOR CORN	1	061214.0	1402609
14		1	671209.0	1459293
15		2	603017.3	1402436
16		1	608716.0	Chain
17		1	544147.0	2002279
18		1	818101.0	Chain
19		1	506671.2	1454323
20	FROM NO. 93202272	1	821734.2	0300206
20	TO NO. 93202271	1	545689.0	0300225
21		1	056961.0	1900106
22		1	644448.1	1200149
23		1	661427.0	1499369
24	DRUM VARIABLE SPEED DRIVE	1	661220.1	1424259
25		1	600981.0	Chain
26	DIRECT DRIVE	1	661429.0	1499328
0	ALTERNATOR FROM NO. 93202272	1	796998.0	0285314
0	ALTERNATOR TILL NR. 932002271	1	545954.0	1485268

MEDION 330 HYDRO

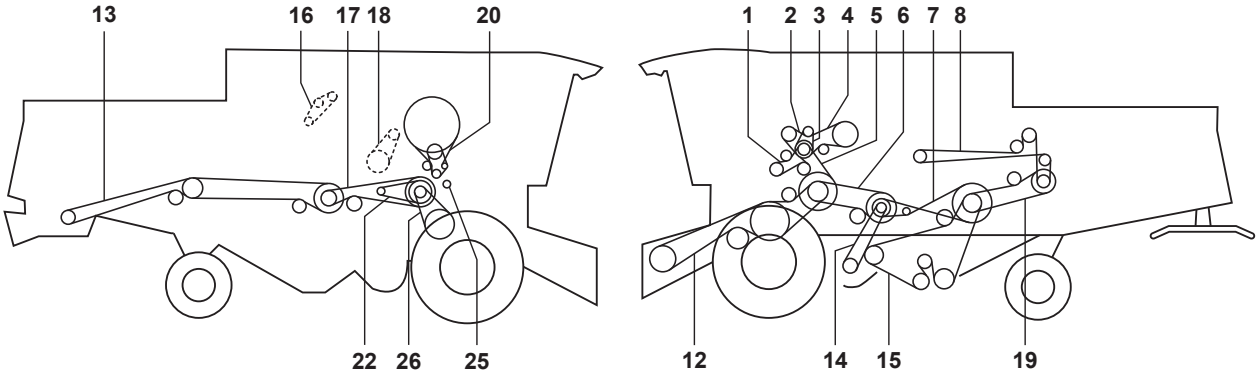

			OE	
1	HYDRAULIC GROUND DRIVE	1	644016.1	1424181
2	GEAR PUMP	1	656028.0	0201109
3	AIR CONDITIONER	1	621903.1	1443151
4	GRAIN TANK UNLOADING	1	544166.0	0223201
5	THRESHING MECHANISM DRIVE	1	544164.0	1425257
6	SIEVE PAN, 1STE STAGE	1	603337.0	0202222
7	SIEVE PAN, 2ND STAGE	1	603336.1	1429345
8	INTENSIVE SEPARATION SYSTEM	1	644447.0	1401412
12		1	644419.1	0302428
13	CHOPPER DRIVE, 2ND STAGE	1	061353.1	1402622
14	FAN VARIATOR	1	671209.0	1459293
15	SIEVE PAN, 3RD STAGE	2	603017.3	1402436
16		1	608716.0	Chain
17	CHOPPER DRIVE 1STE STAGE	1	544147.0	2002279
18		1	818101.0	Chain
19	STRAW WALKER DRIVE	1	506671.2	1454323
20	RADIATOR SCREEN 2ND STAGE FROM NO. 93100144	1	821734.2	0300206
20	RADIATOR SCREEN 2ND STAGE TO NO. 93100143	1	545689.0	0300225
22	RADIATOR SCREEN SUCTION BLOWER	1	644448.1	1200149
25		1	600981.0	Chain
26	DIRECT DRIVE DRUM VARIABLE SPEED DRIVE 650 - 1500 RPM	1	661429.0	1499328
0	ALTERNATOR FROM NO. 93100214	1	796998.0	0285314
0	ALTERNATOR FROM NR. 93100213	1	545954.0	1485268

MEDION 340

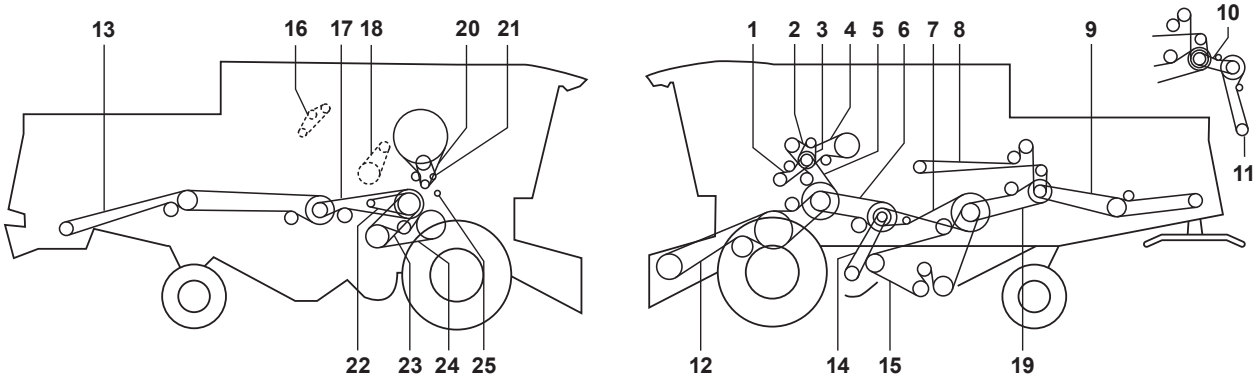

			OE	
0	ALTERNATOR DRIVE - FROM NO. 93400580	1	796998.0	0285314
0	ALTERNATOR DRIVE - TILL NR. 93400579	1	545954.0	1485268
1		1	544049.1	0223179
2		1	656028.0	0201109
3		1	621903.1	1443151
4		1	544166.0	0223201
5		1	544164.0	1425257
6		1	603337.0	0202222
7		1	644141.1	1429343
8		1	644447.0	1401412
9		1	623427.1	1401378
10		1	755070.2	1601120
11	N=519 RPM	1	066034.0	1901188
11	N=660 RPM	1	785341.0	1401180
12		1	661337.1	0102464
13		1	061214.0	1402609
14		1	603380.1	1410210
15		1	609762.0	0323472
16		1	603380.1	1410210
17		1	644538.0	1623311 EE-TECH
18		1	818101.0	Chain
19		1	506671.2	1454323
20	FROM No. 93400580	1	821734.2	0300206
20	TO No. 93400579	1	545689.0	0300225
21		1	545668.1	0200110
22		1	644537.0	1900151
23	FROM No. 93400610	1	661220.1	1424259
23	TO No. 93400609 / HIGH - LOW SPEED RANGE	1	609823.0	1414208
24	DRUM VARIABLE SPEED DRIVE (N=650 - 1500 RPM)	1	661220.1	1424259

MEGA 202

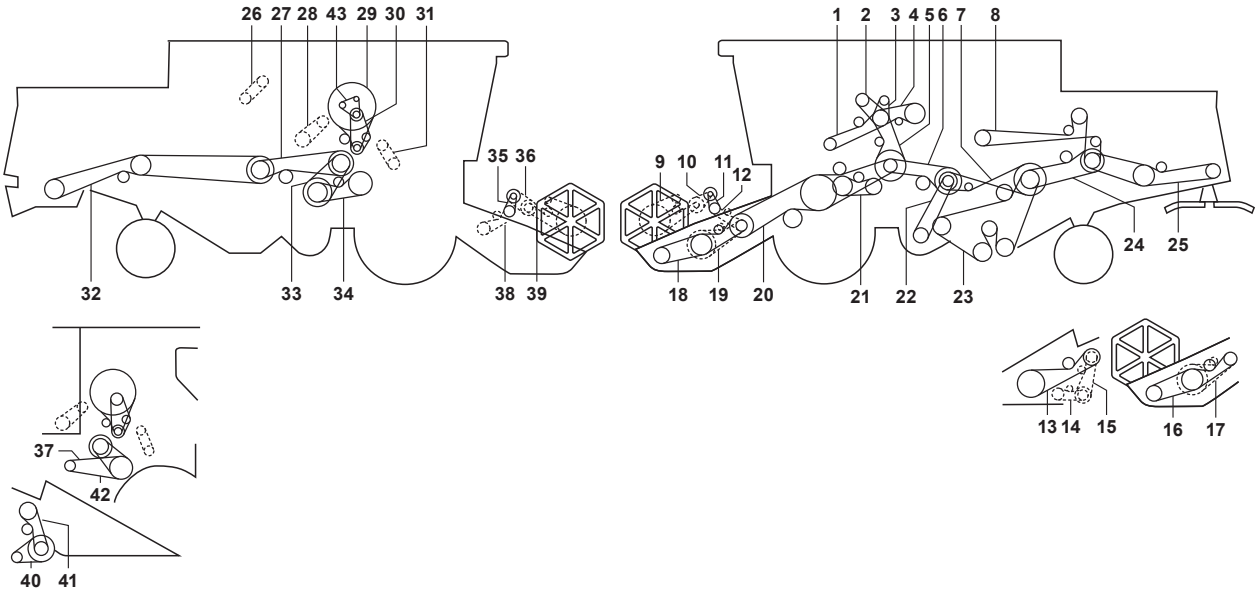

			OE	
1	GROUND DRIVE	1	644465.0	1924209
2	HYDRAULIC PUMP	1	767057.1	0101099
3	AIR CONDITIONER	1	629908.1	1443160
4	GRAIN TANK	1	629769.1	1423207
5	THRESHING MECHANISM	1	661458.1	1425228
6	GEAR	1	603337.0	0202222
7		1	603336.1	1429345
8	FEED RAKE DRIVE	1	644447.0	1401412
9	AT 3.6 M - 5.1 M FROM CUTTERBAR 288353	1	648166.0	Chain
9	TO CUTTERBAR 288352	1	650193.0	Chain
10	AT 3.6 M - 5.1 M	1	670229.2	Chain
11	AT 3.6 M - 5.1 M	1	670224.1	1462186
12	AT 3.6 M - 5.1 M	1	650191.2	Chain
13	FOR CORN PICKER	1	692149.0	1424269 EE-TECH
13	FOR CORN PICKER	1	692150.0	1424276
14	FOR CORN PICKER	1	692166.0	Chain
15	FOR CORN PICKER	1	503445.0	Chain
16	AT 6.0 M - 6.6 M	1	671013.1	0202230
17	AT 6.0 M - 6.6 M	1	676277.0	Chain
18	AT 3.6 M - 5.1 M	1	713506.2	0101200
19	AT 3.6 M - 5.1 M	1	650174.0	Chain
20	SHAFTS DISTANCE 1306MM	2	661337.1	0102464
20	SHAFTS DISTANCE 1463MM	2	661378.2	1402486
21	PRE - ACCELERATOR	1	661031.3	0223185
22	FAN	1	671209.0	1459293
23		2	603017.3	1402436
24	STRAW WALKER	1	506671.2	1454323

MEGA 202 (CONTINUED)

			OE	
25	STRAW SPREADER	1	635494.1	1401304
26	GRAIN ELEVATOR	1	608745.0	Chain
27	STRAW CHOPPER	1	060306.4	0702274
28	GRAIN TANK	1	818101.0	Chain
29	RADIATOR SCREEN	1	661345.0	1400216
30	GEAR	1	657793.0	1900089
31	RETURNS ELEVATOR	1	600981.0	Chain
32	FOR GRAIN CHOPPER	1	061361.0	1402547
32	FOR CORN CHOPPER	1	061213.0	1402532
33	AT 2 STAGE DRIVE	1	609823.0	1414208
34	AT 2 STAGE DRIVE	1	661220.1	1424259
35	AT 6.0 M - 6.6 M	1	670224.1	1462186
36	AT 6.0 M - 6.6 M	1	670229.2	Chain
37	SUCTION FAN	1	644448.1	1200149
38	AT 6.0 M - 6.6 M	1	670229.2	Chain
39	AT 6.0 M - 6.6 M	1	648166.0	Chain
40	FOR HPH-G CHOPPER	1	695610.1	1499313
41	FOR HPH-G CHOPPER	1	680334.1	1424212
42	N = 650 - 1500 MIN-1	1	644418.1	1479291
43	AT MERCEDES OM 366 A	1	133630.1	0372234
43	AT PERKINS 1006.6 T	1	147233.1	0372244

MEGA 202 II

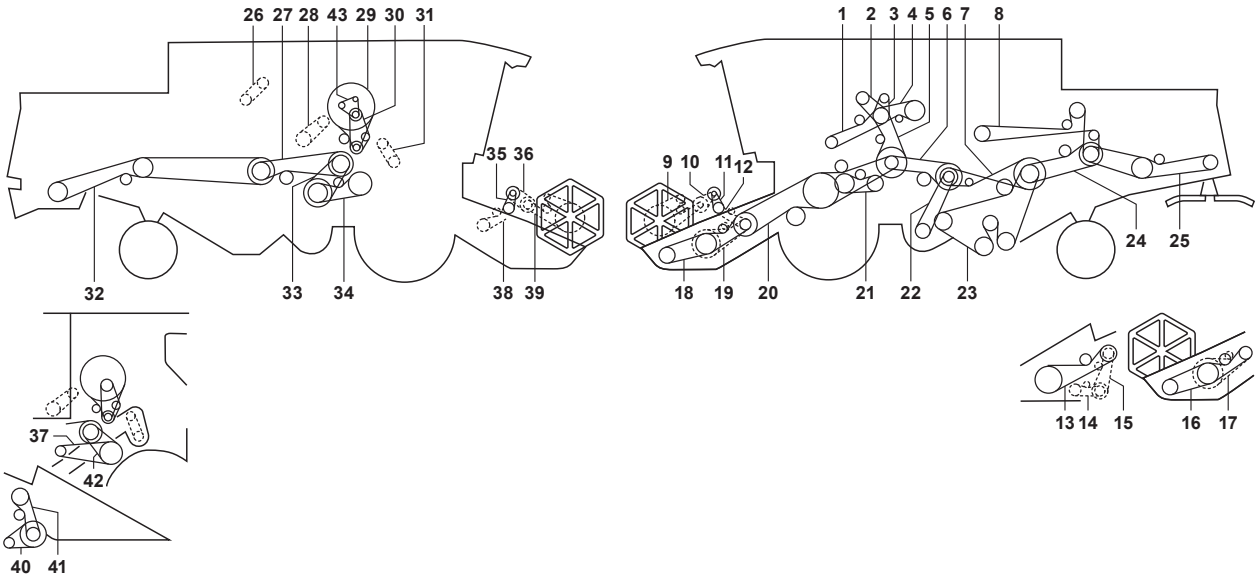

			OE	
1	GROUND DRIVE	1	644465.0	1924209
2	HYDRAULIC PUMP	1	767057.1	0101099
3	AIR CONDITIONER	1	629908.1	1443160
4	GRAIN TANK	1	629769.1	1423207
5	THRESHING MECHANISM	1	661458.1	1425228
6	INTERMEDIATE DRIVE 1	1	603337.0	0202222
7	INTERMEDIATE DRIVE 2	1	603336.1	1429345
8	FEED RAKE DRIVE	1	644447.0	1401412
9	AT 3.6 M - 5.1 M	1	648166.0	Chain
10	AT 3.6 M - 5.1 M	1	670229.2	Chain
11	AT 3.6 M - 5.1 M	1	670224.1	1462186
12	AT 3.6 M - 5.1 M	1	650191.2	Chain
13	FOR CORN PICKER	1	692149.0	1424269 EE-TECH
13	FOR CORN PICKER	1	692150.0	1424276
14	FOR CORN PICKER	1	692166.0	Chain
15	FOR CORN PICKER	1	503445.0	Chain
16	AT 6.0 M - 6.6 M	1	671013.1	0202230
17	AT 6.0 M - 6.6 M	1	676277.0	Chain
18	AT 3.6 M - 5.1 M	1	713506.2	0101200
19	AT 3.6 M - 5.1 M	1	650174.0	Chain
20	FEEDER HOUSING CUTTERBAR	2	644369.1	1402501
21	PRE - ACCELERATOR	1	661031.3	0223185
22	FAN	1	671209.0	1459293
23	SIEVE PAN / AUGER	2	603017.3	1402436
24	STRAW WALKER	1	506671.2	1454323
25	STRAW SPREADER	1	635494.1	1401304
26	GRAIN ELEVATOR	1	608745.0	Chain

MEGA 202 II (CONTINUED)

			OE	
27	STRAW CHOPPER	1	060306.4	0702274
28	GRAIN TANK	1	818101.0	Chain
29	RADIATOR SCREEN	1	661345.0	1400216
30	GEAR	1	657793.0	1900089
31	RETURNS ELEVATOR	1	600981.0	Chain
32	FOR GRAIN - CHOPPER	1	061361.0	1402547
32	FOR CORN - CHOPPER	1	061213.0	1402532
33	AT 2 - STAGE DRIVE	1	609823.0	1414208
34	AT 2 - STAGE DRIVE	1	661220.1	1424259
35	AT 6.0 M - 6.6 M	1	670224.1	1462186
36	AT 6.0 M - 6.6 M	1	670229.2	Chain
37	SUCTION FAN	1	644448.1	1200149
38	AT 6.0 M - 6.6 M	1	670229.2	Chain
39	AT 6.0 M - 6.6 M	1	648166.0	Chain
40	FOR HPH-G CHOPPER	1	695610.1	1499313
41	FOR HPH-G CHOPPER	1	680334.1	1424212
42	N = 650 - 1500 MIN-1	1	644418.1	1479291
43	AT MERCEDES OM 366 A	1	133630.1	0372234
43	AT PERKINS 1006.6 T	1	147233.1	0372244

MEGA 203

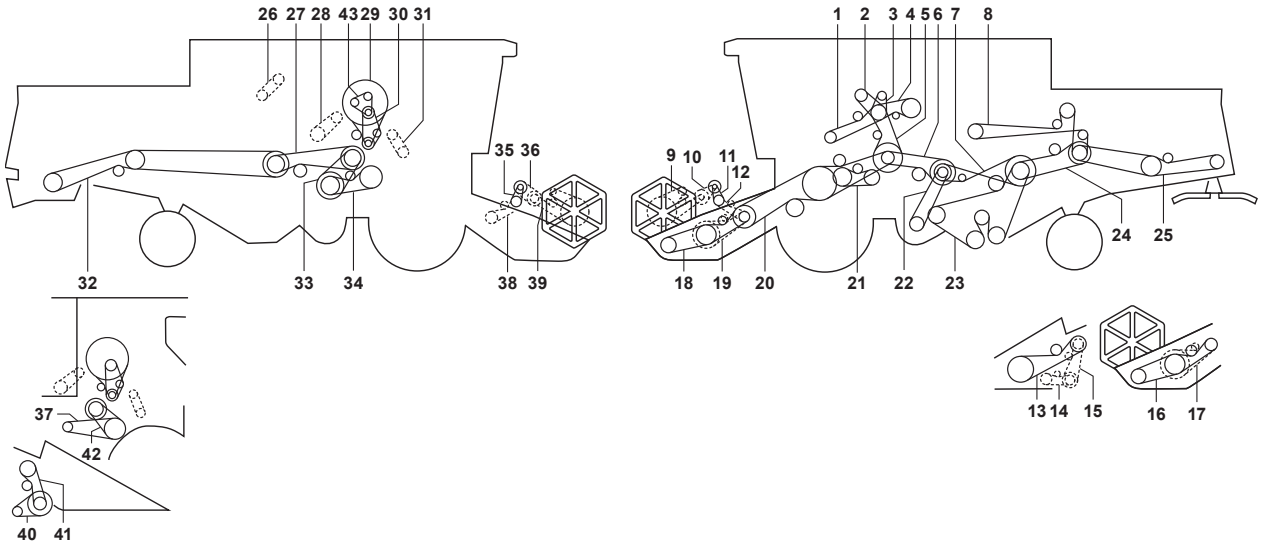

			OE	
1	GROUND DRIVE	1	661362.2	1425215
1	AT MERCEDES OM 366 LA WITH 163 KW	1	661451.0	1425229 EE-TECH
2	HYDRAULIC PUMP	1	767057.1	0101099
3	AIR CONDITIONER	1	629908.1	1443160
4	GRAIN TANK	1	629769.1	1423207
4	AT MERCEDES OM 366 LA WITH 163 KW	1	660409.1	1423198
5	THRESHING MECHANISM	1	661458.1	1425228
5	AT MERCEDES OM 366 LA WITH 163 KW	1	644404.1	1425254
6	GEAR	1	603337.0	0202222
7		1	644141.1	1429343
7		1	603336.1	1429345
8	FEED RAKE DRIVE	1	644447.0	1401412
9	AT 3.9 M - 5.1 M FROM CUTTERBAR 288353	1	648166.0	Chain
9	TO CUTTERBAR 288352	1	650193.0	Chain
10	AT 3.9 M - 5.1 M	1	670229.2	Chain
11	AT 3.9 M - 5.1 M	1	670224.1	1462186
12	AT 3.9 M - 5.1 M	1	650191.2	Chain
13	FOR CORN PICKER	1	692149.0	1424269 EE-TECH
13	FOR CORN PICKER	1	692150.0	1424276
13	FOR MULTIMASTER	1	629142.0	1425218
14	FOR CORN PICKER	1	692166.0	Chain
15	FOR CORN PICKER	1	503445.0	Chain
16	AT 6.0M - 7.5M	1	671013.1	0202230
17	AT 6.0M - 7.5M	1	676277.0	Chain
18	AT 3.9 M - 5.1 M	1	713506.2	0101200
19	AT 3.9 M - 5.1 M	1	650174.0	Chain
20	SHAFTS DISTANCE 1306 MM	2	661337.1	0102464
20	SHAFTS DISTANCE 1463 MM	2	661378.2	1402486
21	PRE - ACCELERATOR	1	661031.3	0223185

MEGA 203 (CONTINUED)

			OE	
22	BLOWER - 204 MEGA	1	603380.1	1410210
22	BLOWER - 203 MEGA	1	671209.0	1459293
23	SIEVE PAN	1	609762.0	0323472
23	SIEVE PAN	2	603017.3	1402436
24	STRAW WALKER	1	506671.2	1454323
25	STRAW SPREADER	1	623427.1	1401378
26	TO NO. 09350929	1	608745.0	Chain
26	GRAIN ELEVATOR	1	608745.0	Chain
27	STRAW CHOPPER	1	060306.4	0702274
28	GRAIN TANK	1	818101.0	Chain
29	RADIATOR SCREEN	1	661345.0	1400216
30	GEAR	1	657793.0	1900089
31	RETURNS ELEVATOR	1	600981.0	Chain
32	FOR GRAIN CHOPPER FROM NO. 09350552	1	061353.1	1402622
32	TO NO. 09350551	1	061360.1	1402621
32	FOR CORN CHOPPER	1	061214.0	1402609
33	AT 2 STAGE DRIVE	1	609823.0	1414208
34	AT 2 STAGE DRIVE	1	661220.1	1424259
35	AT 6.0M - 7.5M	1	670224.1	1462186
36	AT 6.0M - 7.5M	1	670229.2	Chain
37	SUCTION FAN	1	644448.1	1200149
38	AT 6.0M - 7.5M	1	670229.2	Chain
39	AT 6.0 M - 6.6 M	1	648166.0	Chain
39	AT 7.5M CUTTERBAR	1	645483.1	Chain
40	FOR HPH - G CHOPPER	1	695610.1	1499313
41	FOR HPH - G CHOPPER	1	680334.1	1424212
42	AT DOMINATOR 203 MEGA WITH N = 650 - 1500 MIN-1	1	644418.1	1479291
43	AT MERCEDES OM 366 LA	1	133635.1	1472251
43	AT MERCEDES OM 366 A	1	133630.1	0372234
43	AT PERKINS 1006.6 T	1	147233.1	0372244

MEGA 203 II

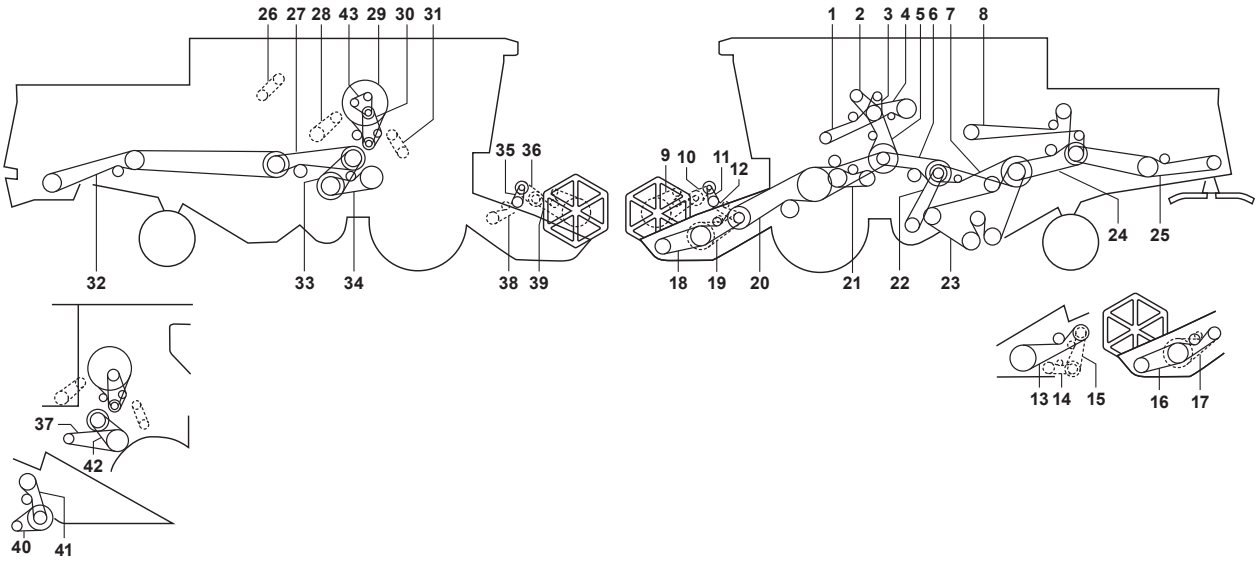

			OE	
1	GROUND DRIVE	1	661362.2	1425215
1	AT MERCEDES OM 366 LA WITH 163 KW	1	661451.0	1425229 EE-TECH
1	WITH MERCEDES OM 906 LA	1	644016.1	1424181
2	HYDRAULIC PUMP	1	767057.1	0101099
2	HYDRAULIC PUMP WITH MERCEDES OM 906 LA	1	656028.0	0201109
3	AIR CONDITIONER	1	629908.1	1443160
3	AIR CONDITIONING WITH MERCEDES OM 906 LA	1	621903.1	1443151
4	GRAIN TANK	1	629769.1	1423207
4	AT MERCEDES OM 366 LA WITH 163 KW	1	660409.1	1423198
4	WITH MERD	1	544166.0	0223201
5	THRESHING MECHANISM	1	661458.1	1425228
5	AT MERCEDES OM 366 LA WITH 163 KW	1	644404.1	1425254
5	WITH MERCEDES OM 906 LA	1	544164.0	1425257
6	GEAR	1	603337.0	0202222
7		1	603336.1	1429345
8	FEED RAKE DRIVE	1	644447.0	1401412
9	AT 3.9 M - 5.1 M FROM CUTTERBAR 288353	1	648166.0	Chain
10	AT 3.9 M - 5.1 M	1	670229.2	Chain
11	AT 3.9 M - 5.1 M	1	670224.1	1462186
12	AT 3.9 M - 5.1 M	1	650191.2	Chain
13	FOR CORN PICKER	1	692149.0	1424269 EE-TECH
13	FOR CORN PICKER	1	692150.0	1424276
13	FOR MULTIMASTER	1	661362.2	1425215
14	FOR CORN PICKER	1	692166.0	Chain
15	FOR CORN PICKER	1	503445.0	Chain
16	AT 6.0M - 7.5M	1	671013.1	0202230
17	AT 6.0M - 7.5M	1	676277.0	Chain
18	AT 3.9 M - 5.1 M	1	713506.2	0101200

MEGA 203 II (CONTINUED)

			OE	
19	AT 3.9 M - 5.1 M	1	650174.0	Chain
20	FEEDER CHANNEL	2	644369.1	1402501
21	PRE - ACCELERATOR	1	661031.3	0223185
22	BLOWER - 203 MEGA	1	671209.0	1459293
23	SIEVE PAN	2	603017.3	1402436
24	STRAW WALKER	1	506671.2	1454323
25	STRAW SPREADER	1	623427.1	1401378
26	GRAIN ELEVATOR	1	608745.0	Chain
27	TO NO. 93500772	1	060306.4	0702274
27	STRAW CHOPPER	1	060306.4	0702274
28	GRAIN TANK	1	818101.0	Chain
29	RADIATOR SCREEN	1	661345.0	1400216
29	RADIATOR SCREEN WITH MERCEDES OM 906 LA	1	545668.1	0200110
30	MERCEDES OM 366 LA	1	657793.0	1900089
30	PERKINS 1006.6 T	1	657793.0	1900089
30	MERCEDES OM 366 LA 163 KW	1	661244.0	1400119
30	WITH MERCEDES OM 906 LA	1	545689.0	0300225
31	RETURNS ELEVATOR	1	600981.0	Chain
32	GRAIN	1	061353.1	1402622
32	FOR CORN - CHOPPER	1	061214.0	1402609
33	AT DOMINATOR 204 MEGA WITH N = 650 - 1500 MIN-1	1	609823.0	1414208
33	AT 2 STAGE DRIVE	1	609823.0	1414208
34	AT DOMINATOR 204 MEGA WITH N = 650 - 1500 MIN-1	1	661220.1	1424259
34	AT 2 STAGE DRIVE	1	661220.1	1424259
35	AT 6.0M - 7.5M	1	670224.1	1462186
36	AT 6.0M - 7.5M	1	670229.2	Chain
37	SUCTION FAN	1	644448.1	1200149
38	AT 6.0M - 7.5M	1	670229.2	Chain
39	AT 6.0M - 7.5M	1	648166.0	Chain
40	FOR HPH - G CHOPPER	1	695610.1	1499313
41	FOR HPH - G CHOPPER	1	680334.1	1424212
42	AT DOMINATOR 203 MEGA WITH N = 650 - 1500 MIN-1	1	644418.1	1479291
43	MERCEDES 366 LA (147 KW)	1	133635.1	1472251
43	MERCEDES 366 LA (163 KW)	1	133642.0	0122155
43	AT PERKINS 1006.6 T	1	147233.1	0372244

MEGA 204

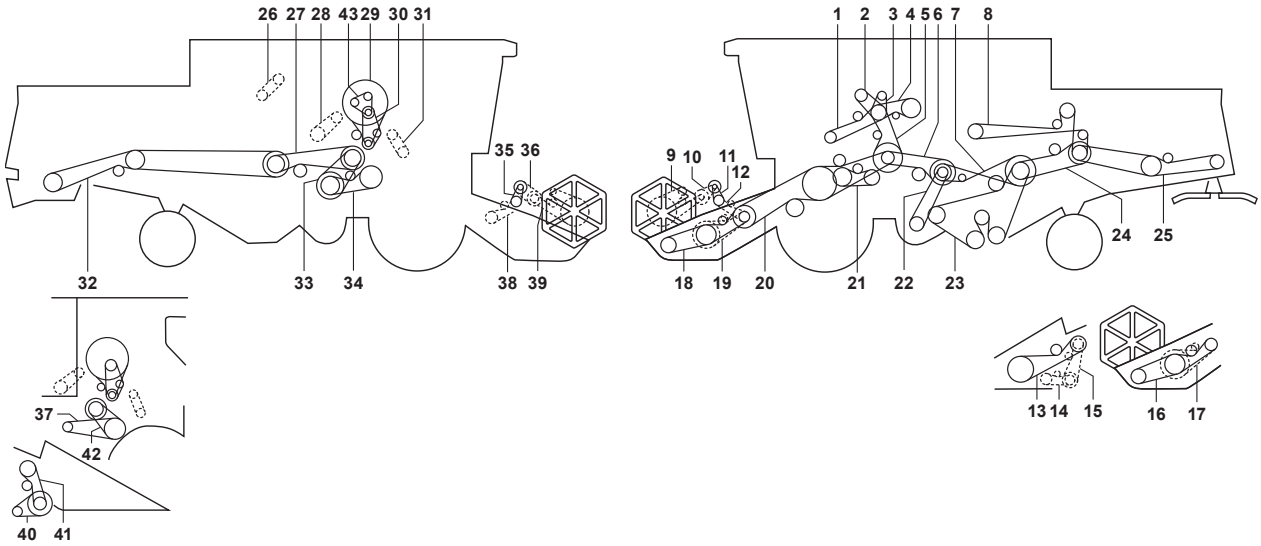

			OE	
1	GROUND DRIVE	1	661362.2	1425215
1	AT MERCEDES OM 366 LA WITH 163 KW	1	661451.0	1425229 EE-TECH
2	HYDRAULIC PUMP	1	767057.1	0101099
3	AIR CONDITIONER	1	629908.1	1443160
4	GRAIN TANK	1	629769.1	1423207
4	AT MERCEDES OM 366 LA WITH 163 KW	1	660409.1	1423198
5	THRESHING MECHANISM	1	661458.1	1425228
5	AT MERCEDES OM 366 LA WITH 163 KW	1	644404.1	1425254
6	GEAR	1	603337.0	0202222
7	GRAIN ELEVATOR - 204 MEGA FROM NO. 09350930	1	644141.1	1429343
8	FEED RAKE DRIVE	1	644447.0	1401412
9	AT 3.9 M - 5.1 M FROM CUTTERBAR 288353	1	648166.0	Chain
9	TO CUTTERBAR 288352	1	650193.0	Chain
10	AT 3.9 M - 5.1 M	1	670229.2	Chain
11	AT 3.9 M - 5.1 M	1	670224.1	1462186
12	AT 3.9 M - 5.1 M	1	650191.2	Chain
13	FOR CORN PICKER	1	692149.0	1424269 EE-TECH
13	FOR CORN PICKER	1	692150.0	1424276
13	FOR MULTIMASTER	1	629142.0	1425218
14	FOR CORN PICKER	1	692166.0	Chain
15	FOR CORN PICKER	1	503445.0	Chain
16	AT 6.0M - 7.5M	1	671013.1	0202230
17	AT 6.0M - 7.5M	1	676277.0	Chain
18	AT 3.9 M - 5.1 M	1	713506.2	0101200
19	AT 3.9 M - 5.1 M	1	650174.0	Chain
20	SHAFTS DISTANCE 1306 MM	2	661337.1	0102464
20	SHAFTS DISTANCE 1463 MM	2	661378.2	1402486
21	PRE - ACCELERATOR	1	661031.3	0223185
22	BLOWER - 204 MEGA	1	603380.1	1410210

MEGA 204 (CONTINUED)

			OE	
23	SIEVE PAN	1	609762.0	0323472
24	STRAW WALKER	1	506671.2	1454323
25	STRAW SPREADER	1	623427.1	1401378
26	GRAIN ELEVATOR	1	608716.0	Chain
26	TO NO. 09350929	1	608745.0	Chain
27	STRAW CHOPPER	1	060306.4	0702274
28	GRAIN TANK	1	818101.0	Chain
29	RADIATOR SCREEN	1	661345.0	1400216
30	GEAR	1	657793.0	1900089
31	RETURNS ELEVATOR	1	600981.0	Chain
32	FOR GRAIN CHOPPER FROM NO. 09350552	1	061353.1	1402622
32	TO NO. 09350551	1	061360.1	1402621
32	FOR CORN CHOPPER	1	061214.0	1402609
33	AT DOMINATOR 204 MEGA WITH N = 650 - 1500 MIN-1	1	609823.0	1414208
33	AT 2 STAGE DRIVE	1	609823.0	1414208
34	AT DOMINATOR 204 MEGA WITH N = 650 - 1500 MIN-1	1	661220.1	1424259
34	AT 2 STAGE DRIVE	1	661220.1	1424259
35	AT 6.0M - 7.5M	1	670224.1	1462186
36	AT 6.0M - 7.5M	1	670229.2	Chain
37	SUCTION FAN	1	644448.1	1200149
38	AT 6.0M - 7.5M	1	670229.2	Chain
39	AT 6.0 M - 6.6 M	1	648166.0	Chain
39	AT 7.5M CUTTERBAR	1	645483.1	Chain
40	FOR HPH - G CHOPPER	1	695610.1	1499313
41	FOR HPH - G CHOPPER	1	680334.1	1424212
43	AT MERCEDES OM 366 LA	1	133635.1	1472251
43	AT MERCEDES OM 366 A	1	133630.1	0372234
43	AT PERKINS 1006.6 T	1	147233.1	0372244

MEGA 204 II

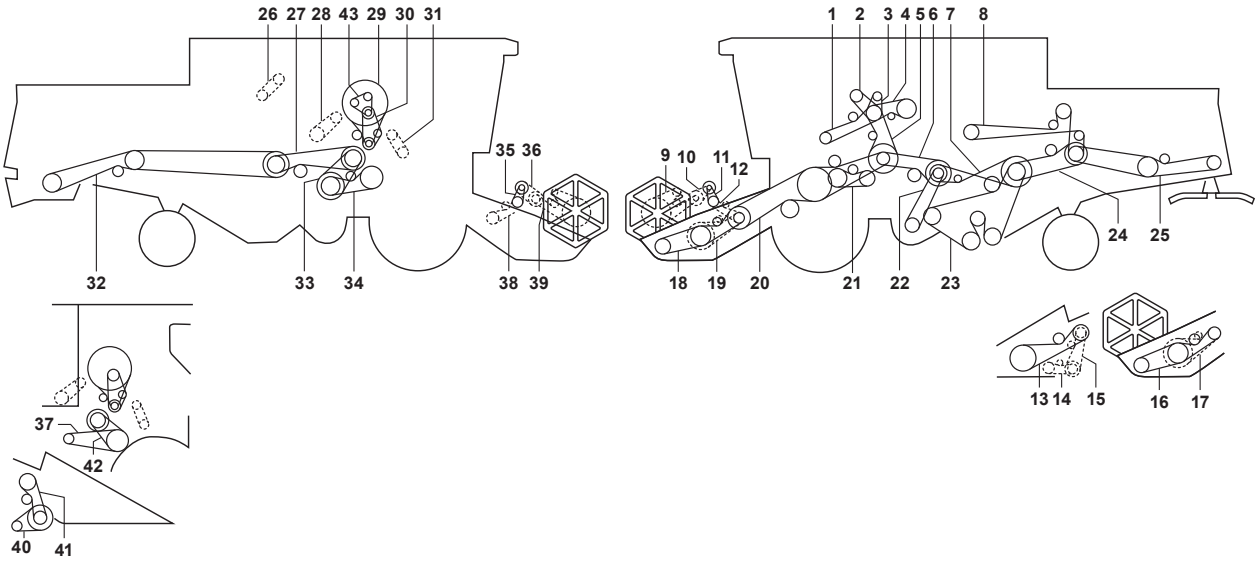

			OE	
1	GROUND DRIVE	1	661362.2	1425215
1	AT MERCEDES OM 366 LA WITH 163 KW	1	661451.0	1425229 EE-TECH
1	WITH MERCEDES OM 906 LA	1	644016.1	1424181
2	HYDRAULIC PUMP	1	767057.1	0101099
2	HYDRAULIC PUMP WITH MERCEDES OM 906 LA	1	656028.0	0201109
3	AIR CONDITIONER	1	629908.1	1443160
3	AIR CONDITIONING WITH MERCEDES OM 906 LA	1	621903.1	1443151
4	GRAIN TANK	1	629769.1	1423207
4	AT MERCEDES OM 366 LA WITH 163 KW	1	660409.1	1423198
4	WITH MERD	1	544166.0	0223201
5	THRESHING MECHANISM	1	661458.1	1425228
5	AT MERCEDES OM 366 LA WITH 163 KW	1	644404.1	1425254
5	WITH MERCEDES OM 906 LA	1	544164.0	1425257
6	GEAR	1	603337.0	0202222
7		1	644141.1	1429343
8	FEED RAKE DRIVE	1	644447.0	1401412
9	AT 3.9 M - 5.1 M FROM CUTTERBAR 288353	1	648166.0	Chain
10	AT 3.9 M - 5.1 M	1	670229.2	Chain
11	AT 3.9 M - 5.1 M	1	670224.1	1462186
12	AT 3.9 M - 5.1 M	1	650191.2	Chain
13	FOR CORN PICKER	1	692149.0	1424269 EE-TECH
13	FOR CORN PICKER	1	692150.0	1424276
13	FOR MULTIMASTER	1	661362.2	1425215
14	FOR CORN PICKER	1	692166.0	Chain
15	FOR CORN PICKER	1	503445.0	Chain
16	AT 6.0M - 7.5M	1	671013.1	0202230
17	AT 6.0M - 7.5M	1	676277.0	Chain
18	AT 3.9 M - 5.1 M	1	713506.2	0101200

MEGA 204 II (CONTINUED)

			OE	
19	AT 3.9 M - 5.1 M	1	650174.0	Chain
20	FEEDER CHANNEL	2	644369.1	1402501
21	PRE - ACCELERATOR	1	661031.3	0223185
22	BLOWER - 204 MEGA	1	603380.1	1410210
23	SIEVE PAN	1	609762.0	0323472
24	STRAW WALKER	1	506671.2	1454323
25	STRAW SPREADER	1	623427.1	1401378
26	GRAIN ELEVATOR	1	608716.0	Chain
27	STRAW CHOPPER	1	644538.0	1623311 EE-TECH
27	TO NO. 93500772	1	060306.4	0702274
28	GRAIN TANK	1	818101.0	Chain
29	RADIATOR SCREEN	1	661345.0	1400216
29	RADIATOR SCREEN WITH MERCEDES OM 906 LA	1	545668.1	0200110
30	MERCEDES OM 366 LA	1	657793.0	1900089
30	PERKINS 1006.6 T	1	657793.0	1900089
30	MERCEDES OM 366 LA 163 KW	1	661244.0	1400119
30	WITH MERCEDES OM 906 LA	1	545689.0	0300225
31	RETURNS ELEVATOR	1	600981.0	Chain
32	GRAIN	1	644539.0	1602631
32	GRAIN	1	061353.1	1402622
32	FOR CORN - CHOPPER	1	061214.0	1402609
33	AT DOMINATOR 204 MEGA WITH N = 650 - 1500 MIN-1	1	609823.0	1414208
33	AT 2 STAGE DRIVE	1	609823.0	1414208
34	AT DOMINATOR 204 MEGA WITH N = 650 - 1500 MIN-1	1	661220.1	1424259
34	AT 2 STAGE DRIVE	1	661220.1	1424259
35	AT 6.0M - 7.5M	1	670224.1	1462186
36	AT 6.0M - 7.5M	1	670229.2	Chain
37	SUCTION FAN	1	644448.1	1200149
38	AT 6.0M - 7.5M	1	670229.2	Chain
39	AT 6.0M - 7.5M	1	648166.0	Chain
40	FOR HPH - G CHOPPER	1	695610.1	1499313
41	FOR HPH - G CHOPPER	1	680334.1	1424212
43	MERCEDES 366 LA (147 KW)	1	133635.1	1472251
43	MERCEDES 366 LA (163 KW)	1	133642.0	0122155
43	AT PERKINS 1006.6 T	1	147233.1	0372244

MEGA 208

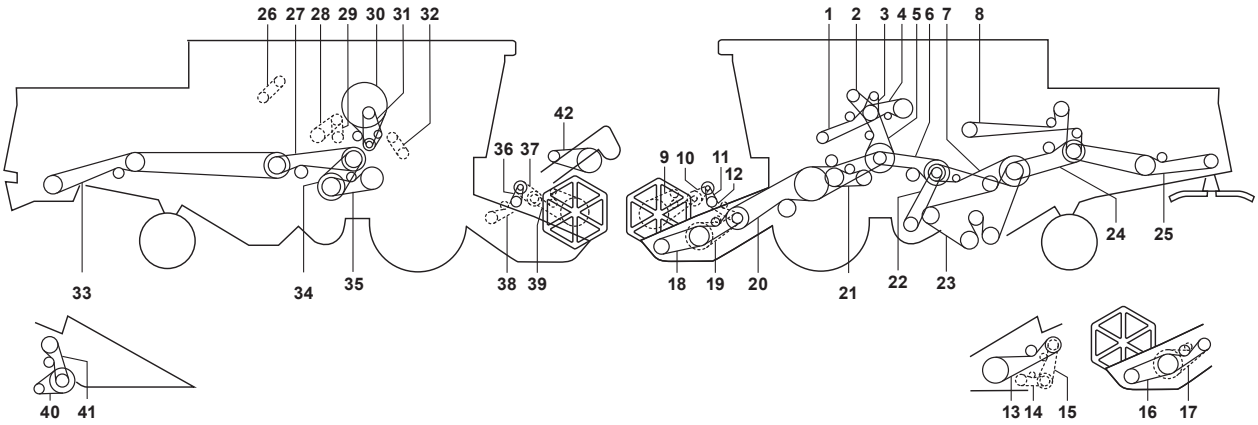

			OE	
1	OM 441 A GROUND DRIVE	1	661239.1	1426236 EE-TECH
1	OM 366 LA GROUND DRIVE	1	661451.0	1425229 EE-TECH
2	OM 441 A HYDRAULIC PUMP	1	633030.2	0201108
2	OM 366 LA HYDRAULIC PUMP	1	767057.1	0101099
3	OM 441 A AIR CONDITIONING	1	661114.0	1443167
3	OM 366 LA AIR CONDITIONING	1	629908.1	1443160
4	OM 441 A GRAIN TANK	1	661093.1	1423202
4	OM 366 LA GRAIN TANK	1	660409.1	1423198
5	OM 441 A THRESHING MECHANISM	1	644403.0	1426260
5	OM 366 LA THRESHING MECHANISM	1	644404.1	1425254
6	GEAR	1	603337.0	0202222
7		1	644141.1	1429343
8	FEED RAKE DRIVE	1	644447.0	1401412
9	AT 4.5M - 5.1M FROM CUTTERBAR 288353	1	648166.0	Chain
9	TO CUTTERBAR 288352	1	650193.0	Chain
10	AT 4.5M - 5.1M	1	670229.2	Chain
11	AT 4.5M - 5.1M	1	670224.1	1462186
12	AT 4.5M - 5.1M	1	650191.2	Chain
13	FOR CORN PICKER	1	692149.0	1424269 EE-TECH
13	FOR CORN PICKER	1	692150.0	1424276
13	FOR MULTIMASTER	1	629142.0	1425218
14	FOR CORN PICKER	1	692166.0	Chain
15	FOR CORN PICKER	1	503445.0	Chain
16	AT 6.0 M - 9.0 M	1	671013.1	0202230
17	AT 6.0 M - 9.0 M	1	676277.0	Chain
18	AT 4.5M - 5.1M	1	713506.2	0101200
19	AT 4.5M - 5.1M	1	650174.0	Chain
20	FEEDER HOUSING SHAFTS DISTANCE 1306MM	2	661378.2	1402486
20	SHAFTS DISTANCE 1463MM	2	644399.0	1402508
21	ACCELERATOR	1	661031.3	0223185
22	FAN	1	603380.1	1410210
23	SIEVE BOX	1	609762.0	0323472

MEGA 208 (CONTINUED)

			OE	
24	STRAW WALKER	1	506671.2	1454323
25	STRAW SPREADER	1	623427.1	1401378
26	GRAIN ELEVATOR FROM NO. 09450677	1	646128.0	Chain
26	TO NO. 09450676	1	608716.0	Chain
27	STRAW CHOPPER	1	060306.4	0702274
28	GRAIN TANK	1	818101.0	Chain
29	GRAIN TANK	1	642492.0	Chain
30	RADIATOR SCREEN	1	661345.0	1400216
31	OM 441 A INTERMEDIATE DRIVE	1	661245.0	2600124
31	OM 366 LA INTERMEDIATE DRIVE	1	661244.0	1400119
32	RETURNS ELEVATOR	1	600981.0	Chain
33	FOR GRAIN CHOPPER	1	061353.1	1402622
33	FOR CORN CHOPPER	1	061214.0	1402609
34	DRUM GEAR	1	609823.0	1414208
35	AT N = 650 - 1500 MIN-1	1	661220.1	1424259
35	AT N = 510 - 1400 MIN-1	1	661298.0	1423274
35	AT 2 STAGE DRIVE	1	661220.1	1424259
36	AT 6.0 M - 9.0 M	1	670224.1	1462186
37	AT 6.0 M - 9.0 M	1	670229.2	Chain
38	AT 6.0 M - 9.0 M	1	670229.2	Chain
39	AT 6.0 M - 9.0 M	1	648166.0	Chain
39	AT 7.5 M - 9.0 M	1	645483.1	Chain
40	FOR HPH - G CHOPPER	1	695610.1	1499313
41	FOR HPH - G CHOPPER	1	680334.1	1424212
42	FOR SUCTION BLOWER	1	644448.1	1200149

MEGA 208 II

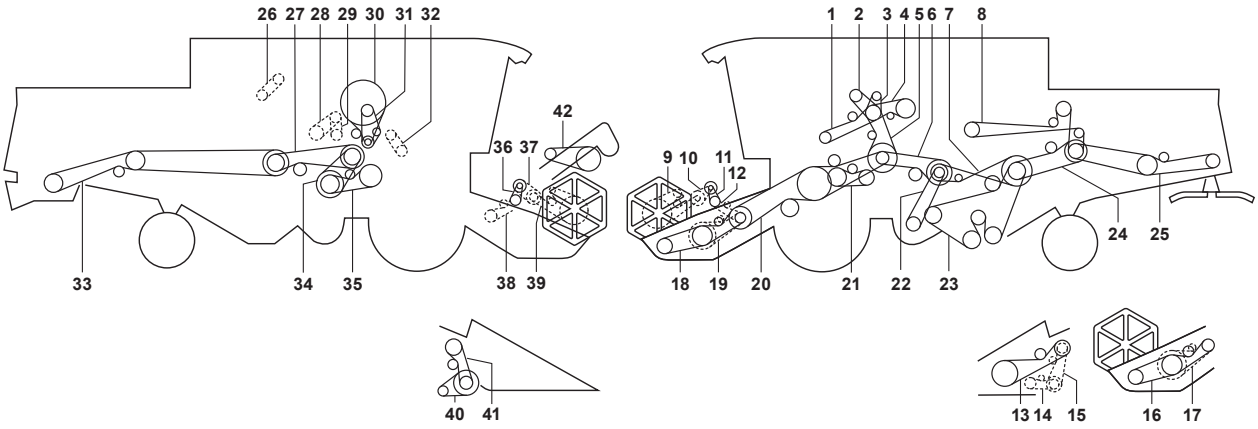

			OE	
1	OM 441 A GROUND DRIVE	1	661239.1	1426236 EE-TECH
1	OM 366 LA GROUND DRIVE	1	661451.0	1425229 EE-TECH
2	OM 441 A HYDRAULIC PUMP	1	633030.2	0201108
2	OM 366 LA HYDRAULIC PUMP	1	767057.1	0101099
3	OM 441 A AIR CONDITIONING	1	661114.0	1443167
3	OM 366 LA AIR CONDITIONING	1	629908.1	1443160
4	OM 441 A GRAIN TANK	1	661093.1	1423202
4	OM 366 LA GRAIN TANK	1	660409.1	1423198
5	OM 441 A THRESHING MECHANISM	1	644403.0	1426260
5	OM 366 LA THRESHING MECHANISM	1	644404.1	1425254
6	GEAR	1	603337.0	0202222
7	THANK YOU GATES	1	644141.1	1429343
8	FEED RAKE DRIVE	1	644447.0	1401412
9	AT 4.5M - 5.1M	1	648166.0	Chain
10	AT 4.5M - 5.1M	1	670229.2	Chain
11	AT 4.5M - 5.1M	1	670224.1	1462186
12	AT 4.5M - 5.1M	1	650191.2	Chain
13	FOR CORN PICKER	1	692149.0	1424269 EE-TECH
13	FOR CORN PICKER	1	692150.0	1424276
13	FOR MULTIMASTER	1	629142.0	1425218
14	FOR CORN PICKER	1	692166.0	Chain
15	FOR CORN PICKER	1	503445.0	Chain
16	AT 6.0 M - 9.0 M	1	671013.1	0202230
17	AT 6.0 M - 9.0 M	1	676277.0	Chain
18	AT 4.5M - 5.1M	1	713506.2	0101200
19	AT 4.5M - 5.1M	1	650174.0	Chain
20	FEEDER CHANNEL	2	644368.1	1402522
21	ACCELERATOR	1	661031.3	0223185
22	FAN	1	603380.1	1410210
23	SIEVE BOX	1	609762.0	0323472
24	STRAW WALKER	1	506671.2	1454323
25	STRAW SPREADER	1	623427.1	1401378

MEGA 208 II (CONTINUED)

			OE	
26	GRAIN ELEVATOR	1	646128.0	Chain
27	STRAW CHOPPER FROM NO. 94501059	1	644538.0	1623311 EE-TECH
27	TO NO. 94501058	1	060306.4	0702274
28	GRAIN TANK	1	818101.0	Chain
29	GRAIN TANK	1	642492.0	Chain
30	RADIATOR SCREEN	1	661345.0	1400216
31	OM 441 A INTERMEDIATE DRIVE	1	661245.0	2600124
31	OM 366 LA INTERMEDIATE DRIVE	1	661244.0	1400119
32	RETURNS ELEVATOR	1	600981.0	Chain
33	FOR GRAIN CHOPPER FROM NO. 94501059	1	644539.0	1602631
33	FOR GRAIN CHOPPER TO NO. 94501058	1	061353.1	1402622
33	FOR CORN CHOPPER	1	061214.0	1402609
34	DRUM GEAR	1	609823.0	1414208
35	DRUM DRIVE	1	661220.1	1424259
36	AT 6.0 M - 9.0 M	1	670224.1	1462186
37	AT 6.0 M - 9.0 M	1	670229.2	Chain
38	AT 6.0 M - 9.0 M	1	670229.2	Chain
39	AT 6.0 M - 6.6 M	1	648166.0	Chain
39	AT 7.5 M - 9.0 M	1	645483.1	Chain
40	FOR HPH - G CHOPPER	1	695610.1	1499313
41	FOR HPH - G CHOPPER	1	680334.1	1424212
42	FOR SUCTION BLOWER FROM NO. 94501059	1	644537.0	1900151
42	TO NO. 94501058	1	644448.1	1200149

MEGA 218

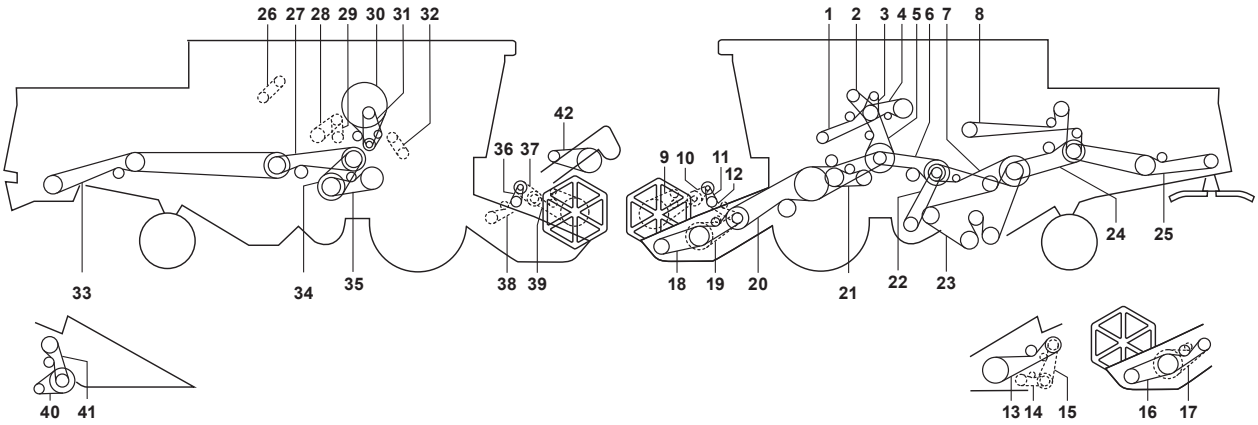

			OE	
1	OM 441 A GROUND DRIVE	1	661239.1	1426236 EE-TECH
1	OM 366 LA GROUND DRIVE	1	661451.0	1425229 EE-TECH
2	OM 441 A HYDRAULIC PUMP	1	633030.2	0201108
2	OM 366 LA HYDRAULIC PUMP	1	767057.1	0101099
3	OM 441 A AIR CONDITIONING	1	661114.0	1443167
3	OM 366 LA AIR CONDITIONING	1	629908.1	1443160
4	OM 441 A GRAIN TANK	1	661093.1	1423202
4	OM 366 LA GRAIN TANK	1	660409.1	1423198
5	OM 441 A THRESHING MECHANISM	1	644403.0	1426260
5	OM 366 LA THRESHING MECHANISM	1	644404.1	1425254
6	GEAR	1	603337.0	0202222
7		1	644141.1	1429343
8	FEED RAKE DRIVE	1	644447.0	1401412
9	AT 4.5M - 5.1M FROM CUTTERBAR 288353	1	648166.0	Chain
9	TO CUTTERBAR 288352	1	650193.0	Chain
10	AT 4.5M - 5.1M	1	670229.2	Chain
11	AT 4.5M - 5.1M	1	670224.1	1462186
12	AT 4.5M - 5.1M	1	650191.2	Chain
13	FOR CORN PICKER	1	692149.0	1424269 EE-TECH
13	FOR CORN PICKER	1	692150.0	1424276
13	FOR MULTIMASTER	1	629142.0	1425218
14	FOR CORN PICKER	1	692166.0	Chain
15	FOR CORN PICKER	1	503445.0	Chain
16	AT 6.0 M - 9.0 M	1	671013.1	0202230
17	AT 6.0 M - 9.0 M	1	676277.0	Chain
18	AT 4.5M - 5.1M	1	713506.2	0101200
19	AT 4.5M - 5.1M	1	650174.0	Chain
20	FEEDER HOUSING SHAFTS DISTANCE 1306MM	2	661378.2	1402486
20	SHAFTS DISTANCE 1463MM	2	644399.0	1402508
21	ACCELERATOR	1	661031.3	0223185
22	FAN	1	603380.1	1410210
23	SIEVE BOX	1	609762.0	0323472

MEGA 218 (CONTINUED)

			OE	
24	STRAW WALKER	1	506671.2	1454323
25	STRAW SPREADER	1	623427.1	1401378
26	GRAIN ELEVATOR FROM NO. 09450677	1	646128.0	Chain
26	TO NO. 09450676	1	608716.0	Chain
27	STRAW CHOPPER	1	060306.4	0702274
28	GRAIN TANK	1	818101.0	Chain
29	GRAIN TANK	1	642492.0	Chain
30	RADIATOR SCREEN	1	661345.0	1400216
31	OM 441 A INTERMEDIATE DRIVE	1	661245.0	2600124
31	OM 366 LA INTERMEDIATE DRIVE	1	661244.0	1400119
32	RETURNS ELEVATOR	1	600981.0	Chain
33	FOR GRAIN CHOPPER	1	061353.1	1402622
33	FOR CORN CHOPPER	1	061214.0	1402609
34	DRUM GEAR	1	609823.0	1414208
35	AT N = 650 - 1500 MIN-1	1	661220.1	1424259
35	AT N = 510 - 1400 MIN-1	1	661298.0	1423274
35	AT 2 STAGE DRIVE	1	661220.1	1424259
36	AT 6.0 M - 9.0 M	1	670224.1	1462186
37	AT 6.0 M - 9.0 M	1	670229.2	Chain
38	AT 6.0 M - 9.0 M	1	670229.2	Chain
39	AT 6.0 M - 9.0 M	1	648166.0	Chain
39	AT 7.5 M - 9.0 M	1	645483.1	Chain
40	FOR HPH - G CHOPPER	1	695610.1	1499313
41	FOR HPH - G CHOPPER	1	680334.1	1424212
42	FOR SUCTION BLOWER	1	644448.1	1200149

MEGA 218 II

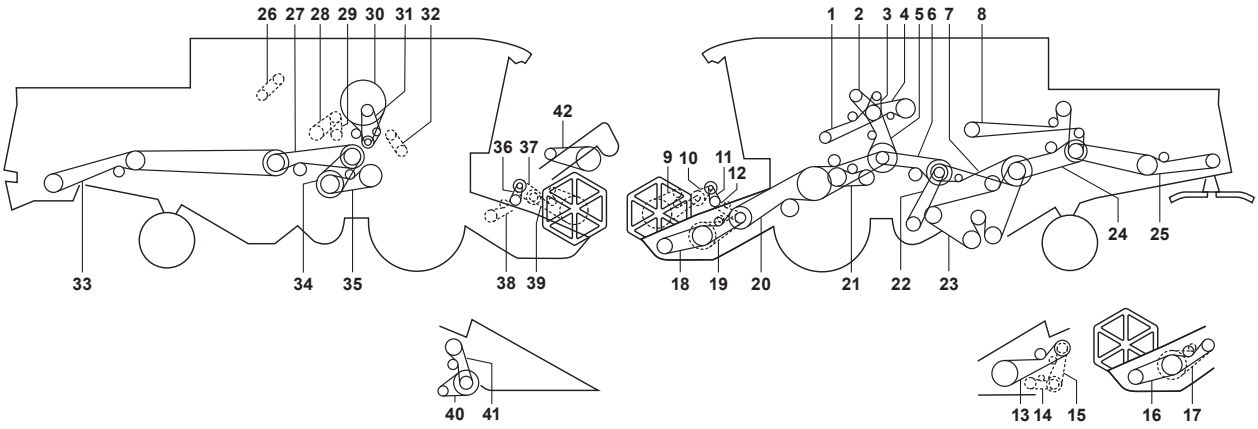

			OE	
1	OM 441 A GROUND DRIVE	1	661239.1	1426236 EE-TECH
1	OM 366 LA GROUND DRIVE	1	661451.0	1425229 EE-TECH
2	OM 441 A HYDRAULIC PUMP	1	633030.2	0201108
2	OM 366 LA HYDRAULIC PUMP	1	767057.1	0101099
3	OM 441 A AIR CONDITIONING	1	661114.0	1443167
3	OM 366 LA AIR CONDITIONING	1	629908.1	1443160
4	OM 441 A GRAIN TANK	1	661093.1	1423202
4	OM 366 LA GRAIN TANK	1	660409.1	1423198
5	OM 441 A THRESHING MECHANISM	1	644403.0	1426260
5	OM 366 LA THRESHING MECHANISM	1	644404.1	1425254
6	GEAR	1	603337.0	0202222
7		1	644141.1	1429343
8	FEED RAKE DRIVE	1	644447.0	1401412
9	AT 4.5M - 5.1M	1	648166.0	Chain
10	AT 4.5M - 5.1M	1	670229.2	Chain
11	AT 4.5M - 5.1M	1	670224.1	1462186
12	AT 4.5M - 5.1M	1	650191.2	Chain
13	FOR CORN PICKER	1	692149.0	1424269 EE-TECH
13	FOR CORN PICKER	1	692150.0	1424276
13	FOR MULTIMASTER	1	629142.0	1425218
14	FOR CORN PICKER	1	692166.0	Chain
15	FOR CORN PICKER	1	503445.0	Chain
16	AT 6.0 M - 9.0 M	1	671013.1	0202230
17	AT 6.0 M - 9.0 M	1	676277.0	Chain
18	AT 4.5M - 5.1M	1	713506.2	0101200
19	AT 4.5M - 5.1M	1	650174.0	Chain
20	FEEDER CHANNEL	2	644368.1	1402522
21	ACCELERATOR	1	661031.3	0223185
22	FAN	1	603380.1	1410210
23	SIEVE BOX	1	609762.0	0323472
24	STRAW WALKER	1	506671.2	1454323
25	STRAW SPREADER	1	623427.1	1401378

MEGA 218 II (CONTINUED)

			OE	
26	GRAIN ELEVATOR	1	646128.0	Chain
27	STRAW CHOPPER FROM NO. 94501059	1	644538.0	1623311 EE-TECH
27	TO NO. 94501058	1	060306.4	0702274
28	GRAIN TANK	1	818101.0	Chain
29	GRAIN TANK	1	642492.0	Chain
30	RADIATOR SCREEN	1	661345.0	1400216
31	OM 441 A INTERMEDIATE DRIVE	1	661245.0	2600124
31	OM 366 LA INTERMEDIATE DRIVE	1	661244.0	1400119
32	RETURNS ELEVATOR	1	600981.0	Chain
33	FOR GRAIN CHOPPER FROM NO. 94501059	1	644539.0	1602631
33	FOR GRAIN CHOPPER TO NO. 94501058	1	061353.1	1402622
33	FOR CORN CHOPPER	1	061214.0	1402609
34	DRUM GEAR	1	609823.0	1414208
35	DRUM DRIVE	1	661220.1	1424259
36	AT 6.0 M - 9.0 M	1	670224.1	1462186
37	AT 6.0 M - 9.0 M	1	670229.2	Chain
38	AT 6.0 M - 9.0 M	1	670229.2	Chain
39	AT 6.0 M - 6.6 M	1	648166.0	Chain
39	AT 7.5 M - 9.0 M	1	645483.1	Chain
40	FOR HPH - G CHOPPER	1	695610.1	1499313
41	FOR HPH - G CHOPPER	1	680334.1	1424212
42	FOR SUCTION BLOWER FROM NO. 94501059	1	644537.0	1900151
42	TO NO. 94501058	1	644448.1	1200149

MEGA 350

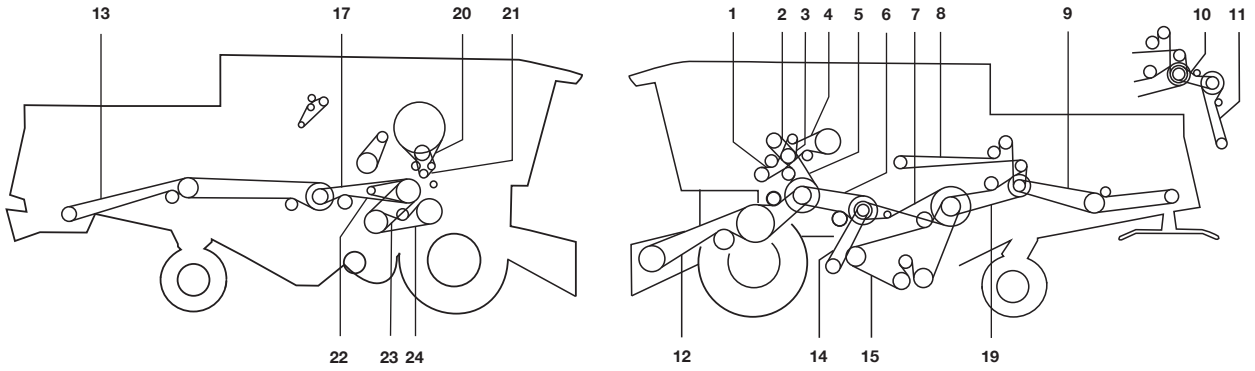

			OE	
1		1	644016.1	1424181
2		1	656028.0	0201109
2	FOR THRESHING	1	629002.1	1601103
3		1	621903.1	1443151
4		1	544166.0	0223201
5		1	544164.0	1425257
6		1	603337.0	0202222
6	FOR THRESHING	1	667238.0	0202245
7		1	644141.1	1429343
8		1	644447.0	1401412
9		1	623427.1	1401378
10		1	755070.2	1601120
11	FOR N=519 RPM	1	066034.0	1901188
11	FOR N=660 RPM	1	785341.0	1401180
12		1	644369.1	1402501
13		1	644539.0	1602631
14		1	603380.1	1410210
15		1	609762.0	0323472
17		1	644538.0	1623311 EE-TECH
19		1	506671.2	1454323
20		1	545689.0	0300225
21		1	545668.1	0200110
22		1	644537.0	1900151
23	TWO STAGE DRIVE	1	661427.0	1499369
24	DRUM DRIVE VARIABLE SPEED (N=650-1500 RPM)	1	661220.1	1424259

MEGA 350 TYP 835

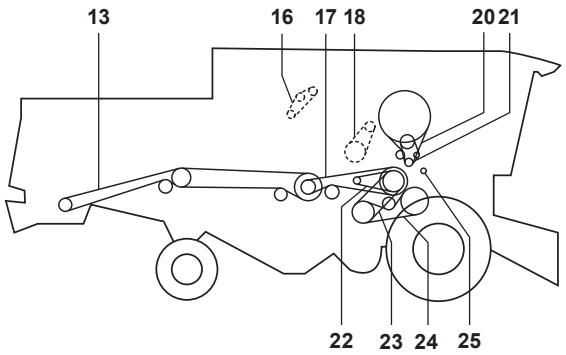

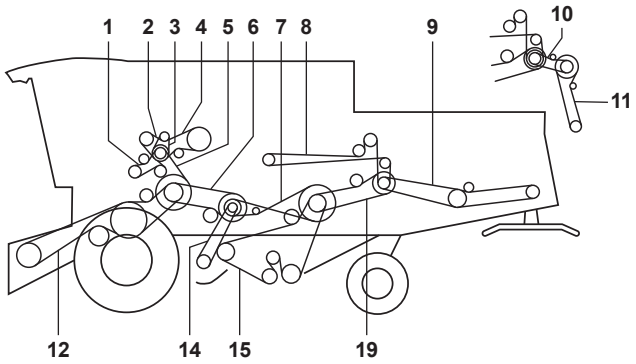

			OE	
1		1	644016.1	1424181
2		1	656028.0	0201109
2	WHEN THRESHING	1	629002.1	1601103
3		1	621903.1	1443151
4		1	544166.0	0223201
5		1	544164.0	1425257
6		1	603337.0	0202222
6	WHEN THRESHING	1	667238.0	0202245
7		1	644141.1	1429343
8		1	644447.0	1401412
9		1	623427.1	1401378
10		1	755070.2	1601120
11	N = 519	1	066034.0	1901188
11	N = 660	1	785341.0	1401180
12		1	644369.1	1402501
13		1	544172.1	1423656
14		1	603380.1	1410210
15		1	609762.0	0323472
16		1	608716.0	Chain
17		1	644538.0	1623311 EE-TECH
18		1	818101.0	Chain
19		1	506671.2	1454323
20	FROM NO. 83500256	1	821734.2	0300206
20	TO NO. 83500255	1	545689.0	0300225
21	TO NO. 83500255	1	545668.1	0200110
22		1	644537.0	1900151
23	TWO STAGE DRIVE	1	661427.0	1499369
24	DRUM VARIABLE SPEED N = 650 - 1500	1	661220.1	1424259
25		1	600981.0	Chain
0	ALTERNATOR FROM NO. 83500256	1	796998.0	0285314
0	ALTERNATOR FROM NR. 83500255	1	545954.0	1485268

MEGA 350 TYP 836

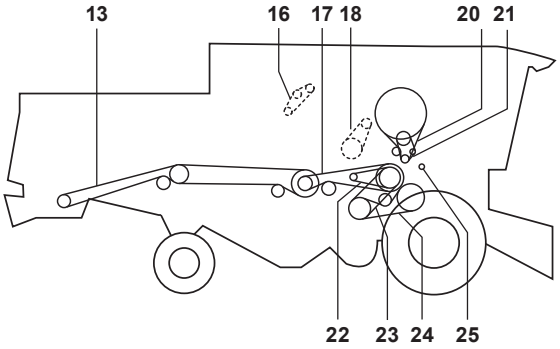

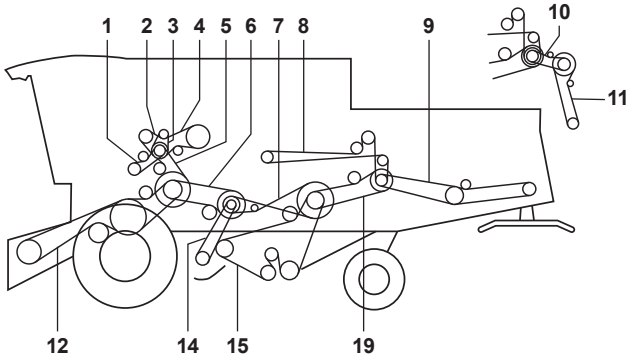

			OE	
1		1	644016.1	1424181
2		1	656028.0	0201109
2	WHEN THRESHING	1	629002.1	1601103
3		1	621903.1	1443151
4		1	544166.0	0223201
5		1	544164.0	1425257
6		1	603337.0	0202222
6	WHEN THRESHING	1	667238.0	0202245
7		1	644141.1	1429343
8		1	644447.0	1401412
9		1	623427.1	1401378
10		1	755070.2	1601120
11	N = 519	1	066034.0	1901188
11	N = 660	1	785341.0	1401180
12		1	644369.1	1402501
13		1	544172.1	1423656
14		1	603380.1	1410210
15		1	609762.0	0323472
16		1	608716.0	Chain
17		1	644538.0	1623311 EE-TECH
18		1	818101.0	Chain
19		1	506671.2	1454323
20	FROM NO. 83500256	1	821734.2	0300206
20	TO NO. 83500255	1	545689.0	0300225
21	TO NO. 83500255	1	545668.1	0200110
22		1	644537.0	1900151
23	TWO STAGE DRIVE	1	661427.0	1499369
24	DRUM VARIABLE SPEED DRIVE N = 650 - 1500	1	661220.1	1424259
25		1	600981.0	Chain
0	ALTERNATOR FROM NO. 83500256	1	796998.0	0285314
0	ALTERNATOR TO NR. 83500255	1	545954.0	1485268

MEGA 360 - 370

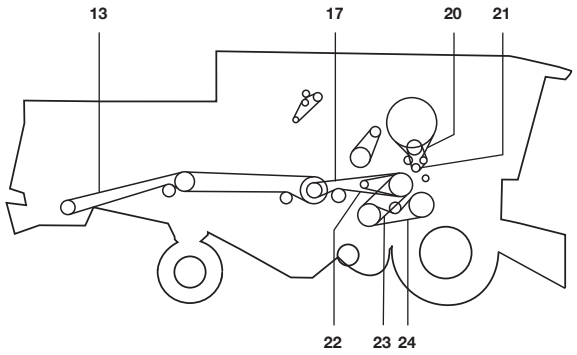

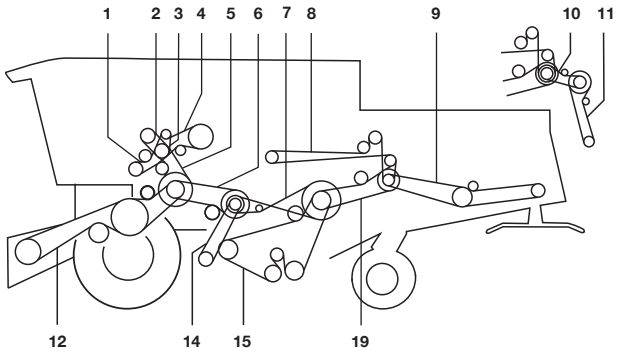

			OE	
1		2	544049.1	0223179
2		1	656028.0	0201109
2		1	629002.1	1601103
3		1	621903.1	1443151
4		1	544166.0	0223201
5		1	544164.0	1425257
6		1	603337.0	0202222
6		1	667238.0	0202245
7		1	644141.1	1429343
8		1	644447.0	1401412
9		1	623427.1	1401378
10		1	755070.2	1601120
11		1	066034.0	1901188
11		1	785341.0	1401180
12		2	644368.1	1402522
13		1	544172.1	1423656
14		1	603380.1	1410210
15		1	609762.0	0323472
17		1	644538.0	1623311 EE-TECH
19		1	506671.2	1454323
20	FROM NR. 84500262	1	821734.2	0300206
20	TO NR. 84500261	1	545689.0	0300225
21	TO NR. 84500261	1	545668.1	0200110
22		1	644537.0	1900151
23	FROM NR. 84500387	1	661427.0	1499369
23	TO NR. 84500386 HIGH - LOW SPEED	1	609823.0	1414208
24	DRUM DRIVE VARIABLE SPEED (N=650-1500 RPM)	1	661220.1	1424259
0	ALTERNATOR DRIVE (FROM NR. 84500262)	1	796998.0	0285314
0	ALTERNATOR DRIVE (TILL NR. 84500261)	1	545954.0	1485268

MEGA 360 TYP 845

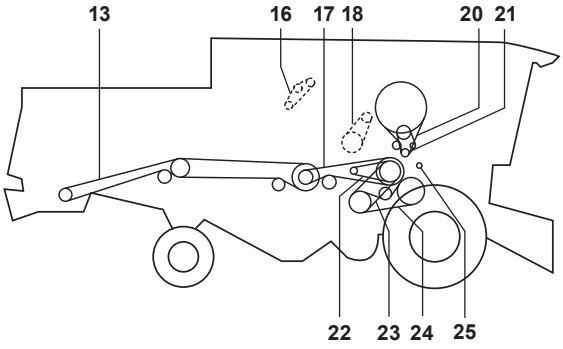

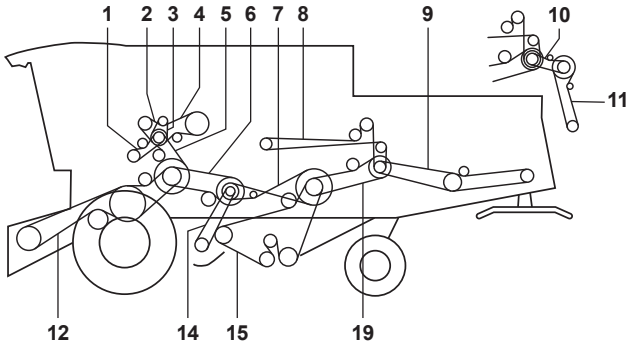

			OE	
1	1 SET = 2 BELTS	2	544049.1	0223179
2		1	656028.0	0201109
2	WHEN THRESHING	1	629002.1	1601103
3		1	621903.1	1443151
4		1	544166.0	0223201
5		1	544164.0	1425257
6		1	603337.0	0202222
6	WHEN THRESHING	1	667238.0	0202245
7		1	644141.1	1429343
8		1	644447.0	1401412
9		1	623427.1	1401378
10		1	755070.2	1601120
11	N = 519	1	066034.0	1901188
11	N = 660	1	785341.0	1401180
12		2	644368.1	1402522
13		1	544172.1	1423656
14		1	603380.1	1410210
15		1	609762.0	0323472
16		1	608716.0	Chain
17		1	644538.0	1623311 EE-TECH
18		1	818101.0	Chain
19		1	506671.2	1454323
20	FROM NO. 84500262	1	821734.2	0300206
20	TO NO. 84500261	1	545689.0	0300225
21	TO NO. 84500261	1	545668.1	0200110
22		1	644537.0	1900151
23	FROM NO. 84500387	1	661427.0	1499369
23	TO NO. 84500386 HIGH - LOW SPEED RANGE TRANSMISSION	1	609823.0	1414208
24	DRUM VARIABLE SPEED DRIVE N = 650 - 1500	1	661220.1	1424259
25		1	600981.0	Chain
0	ALTERNATOR DRIVE (FROM NR. 84500262)	1	796998.0	0285314
0	ALTERNATOR DRIVE (TILL NR. 84500261)	1	545954.0	1485268

MEGA 360 TYP 846

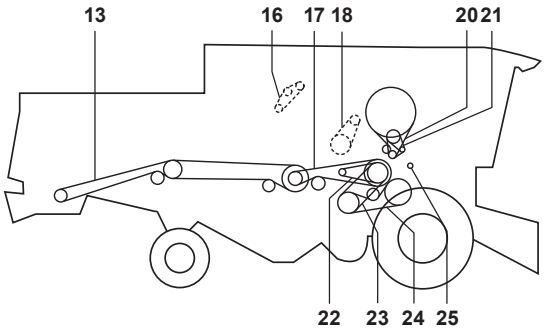

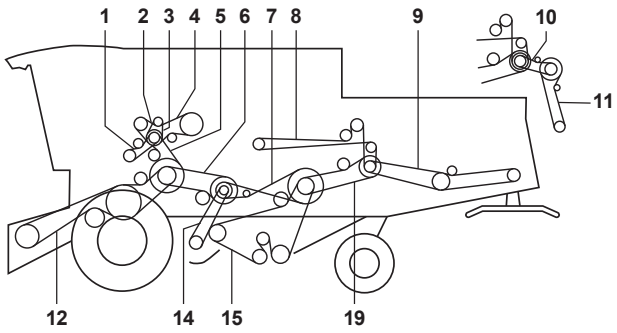

			OE	
1	1 SET = 2 BELTS	2	544049.1	0223179
2		1	656028.0	0201109
2	WHEN THRESHING	1	629002.1	1601103
3		1	621903.1	1443151
4		1	544166.0	0223201
5		1	544164.0	1425257
6		1	603337.0	0202222
6	WHEN THRESHING	1	667238.0	0202245
7		1	644141.1	1429343
8		1	644447.0	1401412
9		1	623427.1	1401378
10		1	755070.2	1601120
11	N = 519	1	066034.0	1901188
11		1	785341.0	1401180
12		2	644368.1	1402522
13		1	544172.1	1423656
14		1	603380.1	1410210
15		1	609762.0	0323472
16		1	608716.0	Chain
17		1	644538.0	1623311 EE-TECH
18		1	818101.0	Chain
19		1	506671.2	1454323
20	FROM NO. 84500262	1	821734.2	0300206
20	TO NO. 84500261	1	545689.0	0300225
21	TO NO. 84500261	1	545668.1	0200110
22		1	644537.0	1900151
23	FROM NO. 84500387	1	661427.0	1499369
23	TO NO. 84500386 HIGH - LOW SPEED RANGE TRANSMISSION	1	609823.0	1414208
24	DRUM VARIABLE SPEED DRIVE N = 650 - 1500	1	661220.1	1424259
25		1	600981.0	Chain
0	ALTERNATOR DRIVE (FROM NR. 84500262)	1	796998.0	0285314
0	ALTERNATOR DRIVE (TILL NR. 84500261)	1	545954.0	1485268

MEGA 360 TYP C12

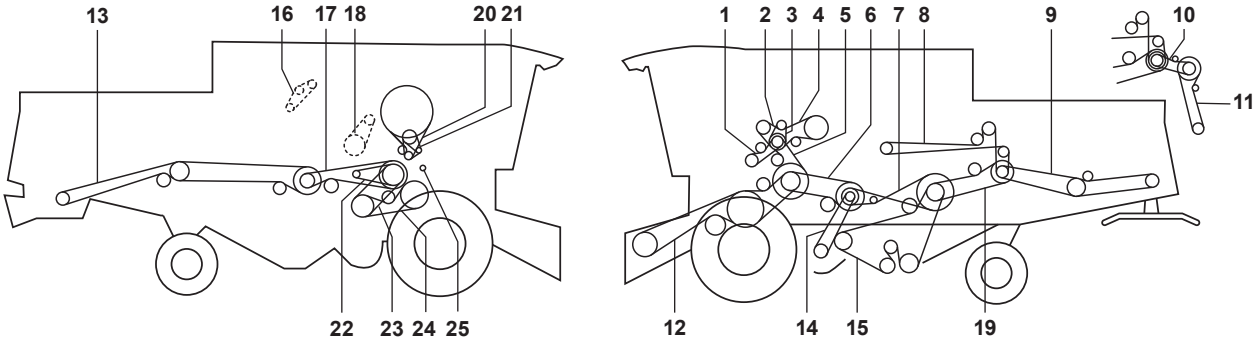

			OE	
1	1 SET = 2 BELTS	2	544049.1	0223179
2		1	656028.0	0201109
2	WHEN THRESHING	1	629002.1	1601103
3		1	621903.1	1443151
4		1	544166.0	0223201
5		1	544164.0	1425257
6		1	603337.0	0202222
6	WHEN THRESHING	1	667238.0	0202245
7		1	644141.1	1429343
8		1	644447.0	1401412
9		1	623427.1	1401378
10		1	755070.2	1601120
11	N = 519	1	066034.0	1901188
11	N = 660	1	785341.0	1401180
12		2	644368.1	1402522
13		1	544172.1	1423656
14		1	603380.1	1410210
15		1	609762.0	0323472
16		1	608716.0	Chain
17		1	644538.0	1623311 EE-TECH
18		1	818101.0	Chain
19		1	506671.2	1454323
20	FROM NO. 84500262	1	821734.2	0300206
20	TO NO. 84500261	1	545689.0	0300225
21	TO NO. 84500261	1	545668.1	0200110
22		1	644537.0	1900151
23	FROM NO. 84500387	1	661427.0	1499369
23	TO NO. 84500386 HIGH - LOW SPEED RANGE TRANSMISSION	1	609823.0	1414208
24	DRUM VARIABLE SPEED DRIVE N = 650 - 1500	1	661220.1	1424259
25		1	600981.0	Chain
0	ALTERNATOR DRIVE (FROM NR. 84500262)	1	796998.0	0285314
0	ALTERNATOR DRIVE (TILL NR. 84500261)	1	545954.0	1485268

MEGA 370 TYP 845

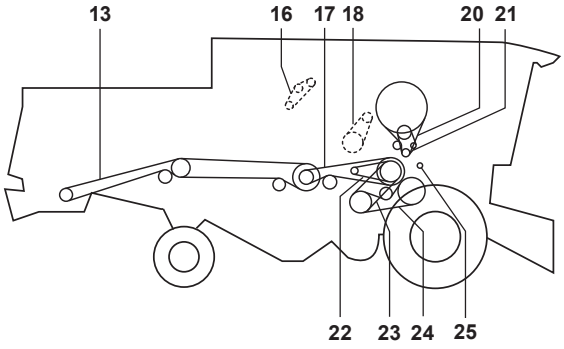

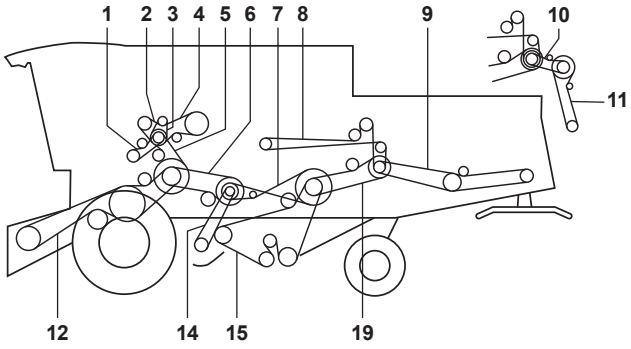

			OE	
1	1 SET = 2 BELTS	2	544049.1	0223179
2		1	656028.0	0201109
2	WHEN THRESHING	1	629002.1	1601103
3		1	621903.1	1443151
4		1	544166.0	0223201
5		1	544164.0	1425257
6		1	603337.0	0202222
6	WHEN THRESHING	1	667238.0	0202245
7		1	644141.1	1429343
8		1	644447.0	1401412
9		1	623427.1	1401378
10		1	755070.2	1601120
11	N = 519	1	066034.0	1901188
11	N = 660	1	785341.0	1401180
12		2	644368.1	1402522
13		1	544172.1	1423656
14		1	603380.1	1410210
15		1	609762.0	0323472
16		1	608716.0	Chain
17		1	644538.0	1623311 EE-TECH
18		1	818101.0	Chain
19		1	506671.2	1454323
20	FROM NO. 84500262	1	821734.2	0300206
20	TO NO. 84500261	1	545689.0	0300225
21	TO NO. 84500261	1	545668.1	0200110
22		1	644537.0	1900151
23	FROM NO. 84500387	1	661427.0	1499369
23	TO NO. 84500386 HIGH - LOW SPEED RANGE TRANSMISSION	1	609823.0	1414208
24	DRUM VARIABLE SPEED DRIVE N = 650 - 1500	1	661220.1	1424259
25		1	600981.0	Chain
0	ALTERNATOR DRIVE (FROM NR. 84500262)	1	796998.0	0285314
0	ALTERNATOR DRIVE (TILL NR. 84500261)	1	545954.0	1485268

MEGA 370 TYP 846

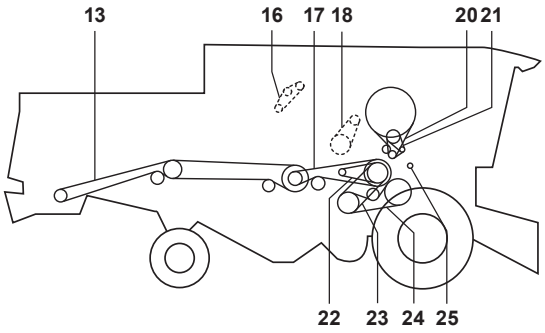

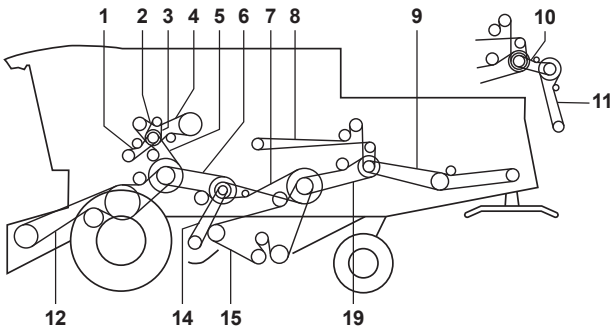

			OE	
1	1 SET = 2 BELTS	2	544049.1	0223179
2		1	656028.0	0201109
2	WHEN THRESHING	1	629002.1	1601103
3		1	621903.1	1443151
4		1	544166.0	0223201
5		1	544164.0	1425257
6		1	603337.0	0202222
6	WHEN THRESHING	1	667238.0	0202245
7		1	644141.1	1429343
8		1	644447.0	1401412
9		1	623427.1	1401378
10		1	755070.2	1601120
11	N = 519	1	066034.0	1901188
11		1	785341.0	1401180
12		2	644368.1	1402522
13		1	544172.1	1423656
14		1	603380.1	1410210
15		1	609762.0	0323472
16		1	608716.0	Chain
17		1	644538.0	1623311 EE-TECH
18		1	818101.0	Chain
19		1	506671.2	1454323
20	FROM NO. 84500262	1	821734.2	0300206
20	TO NO. 84500261	1	545689.0	0300225
21	TO NO. 84500261	1	545668.1	0200110
22		1	644537.0	1900151
23	FROM NO. 84500387	1	661427.0	1499369
23	TO NO. 84500386 HIGH - LOW SPEED RANGE TRANSMISSION	1	609823.0	1414208
24	DRUM VARIABLE SPEED DRIVE N = 650 - 1500	1	661220.1	1424259
25		1	600981.0	Chain
0	ALTERNATOR DRIVE (FROM NR. 84500262)	1	796998.0	0285314
0	ALTERNATOR DRIVE (TILL NR. 84500261)	1	545954.0	1485268

MEGA 370 TYP C12

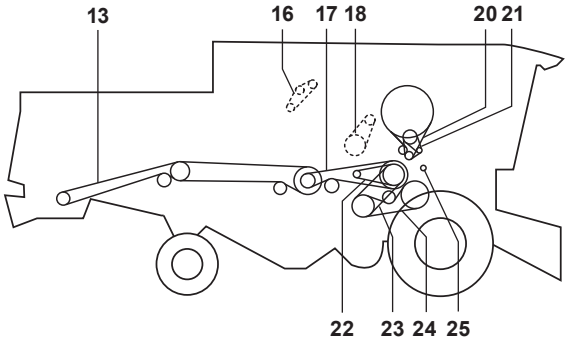

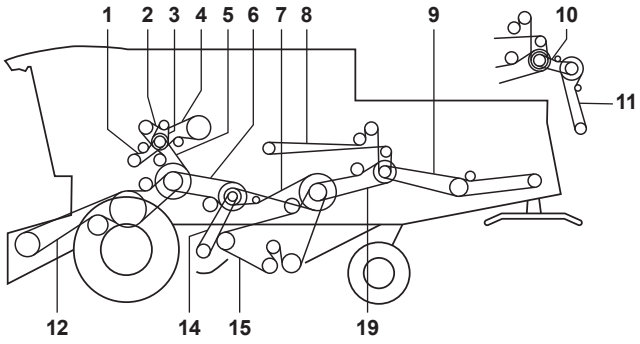

			OE	
1	1 SET = 2 BELTS	2	544049.1	0223179
2		1	656028.0	0201109
2	WHEN THRESHING	1	629002.1	1601103
3		1	621903.1	1443151
4		1	544166.0	0223201
5		1	544164.0	1425257
6		1	603337.0	0202222
6	WHEN THRESHING	1	667238.0	0202245
7		1	644141.1	1429343
8		1	644447.0	1401412
9		1	623427.1	1401378
10		1	755070.2	1601120
11	N = 519	1	066034.0	1901188
11	N = 660	1	785341.0	1401180
12		2	644368.1	1402522
13		1	544172.1	1423656
14		1	603380.1	1410210
15		1	609762.0	0323472
16		1	608716.0	Chain
17		1	644538.0	1623311 EE-TECH
18		1	818101.0	Chain
19		1	506671.2	1454323
20	FROM NO. 84500262	1	821734.2	0300206
20	TO NO. 84500261	1	545689.0	0300225
21	TO NO. 84500261	1	545668.1	0200110
22		1	644537.0	1900151
23	FROM NO. 84500387	1	661427.0	1499369
23	TO NO. 84500386 HIGH - LOW SPEED RANGE TRANSMISSION	1	609823.0	1414208
24	DRUM VARIABLE SPEED DRIVE N = 650 - 1500	1	661220.1	1424259
25		1	600981.0	Chain
0	ALTERNATOR DRIVE (FROM NR. 84500262)	1	796998.0	0285314
0	ALTERNATOR DRIVE (TILL NR. 84500261)	1	545954.0	1485268

MERCATOR

			OE	
1	KNIFE DRIVE	1	610833.1	1401271
1	KNIFE DRIVE	2	610830.1	0501273
2	CYLINDER VARIATOR DRIVE	2	617309.2	1403254
3	MAIN DRIVE	1	630144.0	1403323
3	MAIN DRIVE	1	653059.0	0203300
3	MAIN DRIVE	1	653062.0	0203313
3	MAIN DRIVE	1	653064.0	2103333
4	MAIN DRIVE	1	653060.0	1424350
5	CUTTING TABLE DRIVE	1	653063.0	1403334
6	SHAKER SHOE DRIVE	1	653120.0	1430488
7	FANNING MILL	1	653121.0	/
8	STRAW SPREADER DRIVE	1	653450.0	0137218
9	HYDRAULIC PUMP DRIVE	1	656028.0	0201109
10	REEL DRIVE VARIABLE SPEED	1	778561.1	1459199
11	STRAW WALKER DRIVE	1	653933.0	1601120
12	UNLOADING GRAIN TANK	1	654534.0	0730341
13	TRACTION DRIVE	1	655408.0	1413315
14	THROW OFF DRIVE	1	750294.0	2001143

MERCATOR 50 - 60

			OE	
1	MAIN DRIVE	1	653060.0	1424350
2	HYDRAULIC PUMP DRIVE	1	656028.0	0201109
3	MAIN DRIVE	1	630144.0	1403323
3	MAIN DRIVE	1	653059.0	0203300
3	MAIN DRIVE	1	653062.0	0203313
3	MAIN DRIVE	1	653064.0	2103333
4	REEL DRIVE VARIABLE SPEED	1	778561.1	1459199
5	KNIFE DRIVE	1	610833.1	1401271
5	KNIFE DRIVE	2	610830.1	0501273
6	CUTTING TABLE DRIVE	1	653063.0	1403334
7	CYLINDER VARIATOR DRIVE	2	617309.2	1403254
8	FANNING MILL	1	653121.0	/
9	SHAKER SHOE DRIVE	1	653120.0	1430488
10	DRIVE GRAIN TANK	1	634019.2	0301155
10	DRIVE GRAIN TANK	1	653450.0	0137218
11	STRAW WALKER DRIVE	1	755070.2	1601120
11	STRAW WALKER DRIVE	1	653933.0	1601120
12	TURNING DRUM DRIVE	1	750294.0	2001143
13	TANK UNLOADER DRIVE	1	653779.0	1630327
14	TRACTION DRIVE	1	655408.0	1413315

MERCATOR S 70 - 75

			OE	
1	MAIN DRIVE	1	653060.0	1424350
2	HYDRAULIC PUMP DRIVE	1	656028.0	0201109
3	MAIN DRIVE	1	630144.0	1403323
3	MAIN DRIVE	1	653059.0	0203300
3	MAIN DRIVE	1	653062.0	0203313
3	MAIN DRIVE	1	653064.0	2103333
4	REEL DRIVE VARIABLE SPEED	1	778561.1	1459199
5	KNIFE DRIVE	1	610833.1	1401271
5	KNIFE DRIVE	2	610830.1	0501273
6	CUTTING TABLE DRIVE	1	653063.0	1403334
7	CYLINDER VARIATOR DRIVE	2	617309.2	1403254
8	FANNING MILL	1	653380.0	/
9	SHAKER SHOE DRIVE	1	653120.0	1430488
10	DRIVE GRAIN TANK	1	634019.2	0301155
10	DRIVE GRAIN TANK	1	653450.0	0137218
11	TURNING DRUM DRIVE	1	750294.0	2001143
12	STRAW WALKER DRIVE	1	755070.2	1601120
12	STRAW WALKER DRIVE	1	653933.0	1601120
13	TANK UNLOADER DRIVE	1	654534.0	0730341
14	TRACTION DRIVE	1	655408.0	1413315
15	SHAKER SHAFT DRIVE	1	687046.1	0301211

MERCUR

			OE	
1	BALER	1	500863.0	1430287
2	RADIATOR FAN DRIVE	1	758719.0	1401122
2	RADIATOR FAN DRIVE	1	758662.1	2001129
3	KNIFE DRIVE	1	770214.0	1430265
3	KNIFE DRIVE	1	778717.1	1401209
4	SPREADER GRAIN IN TANK	1	775698.0	1401161
5	REEL DRIVE VARIABLE SPEED	1	778561.1	1459199
6	CYLINDER	1	779039.0	1613159
7	CUTTING TABLE DRIVE	1	779272.0	1429244
7	CUTTING TABLE DRIVE	1	779214.0	1429231
8	TANK UNLOADER DRIVE	1	780419.0	1430213
9	PICK UP DRIVE	1	800309.0	2301174
10	STRAW CHOPPER DRIVE	1	551190.0	1430746
11	TRACTION VARIATOR DRIVE	1	751112.0	1499326
13	TRACTION DRIVE	1	758853.0	1429240
14	THRESHING MACHINE	1	758854.0	1429214
16	SHAKER SHOE FAN ELEVATOR - BALER	1	779212.0	☎
17	SHAKER SHOE FAN ELEVATOR	1	779213.0	1401405

OLDER MODELS

			OE	
1	FAN DRIVE	1	505143.1	1454386
2	BALER	1	506023.0	1430480
3	GOVERNOR DRIVE	1	624131.0	1401081
4	HYDRAULIC PUMP DRIVE	1	633030.2	0201108
5	SIEVE BOX	1	634019.2	0301155
6	STRAW WALKER DRIVE	1	501925.0	0201215
7	MAIN DRIVE FLAT BELT	1	630025.0	/
8	CYLINDER	1	503969.0	☎
9	PICK UP DRIVE	1	507020.0	1401271

PROTECTOR

			OE	
1	KNIFE DRIVE	1	610833.1	1401271
1	KNIFE DRIVE	2	610830.1	0501273
2	CYLINDER VARIATOR DRIVE	2	617309.2	1403254
3	MAIN DRIVE	1	630144.0	1403323
3	MAIN DRIVE	1	653059.0	0203300
3	MAIN DRIVE	1	653062.0	0203313
3	MAIN DRIVE	1	653064.0	2103333
4	CYLINDER DRIVE	1	653060.0	1424350
5	CUTTING TABLE DRIVE	1	653063.0	1403334
6	SHAKER SHOE DRIVE	1	653120.0	1430488
7	FANNING MILL	1	653121.0	/
8	SHAKER SHOE DRIVE	1	653450.0	0137218
9	HYDRAULIC PUMP DRIVE	1	656028.0	0201109
10	REEL DRIVE VARIABLE SPEED	1	778561.1	1459199
11	TANK UNLOADER DRIVE	1	653779.0	1630327
12	STRAW WALKER DRIVE	1	653933.0	1601120
13	TRACTION DRIVE	1	655408.0	1413315
14	TURNING DRUM DRIVE	1	750294.0	2001143

SENATOR

			OE	
1	KNIFE DRIVE	1	610833.1	1401271
1	KNIFE DRIVE	2	610830.1	0501273
2	CYLINDER VARIATOR DRIVE	2	617309.2	1403254
3	MAIN DRIVE	1	630144.0	1403323
3	MAIN DRIVE	1	653059.0	0203300
3	MAIN DRIVE	1	653062.0	0203313
3	MAIN DRIVE	1	653064.0	2103333
4	HYDRAULIC PUMP DRIVE	1	633030.2	0201108
5	CYLINDER	1	653060.0	1424350
6	CUTTING TABLE DRIVE	1	653063.0	1403334
7	SHAKER SHOE DRIVE	1	653120.0	1430488
8	FANNING MILL	1	653380.0	/
8	FANNING MILL	1	653121.0	/
9	REEL DRIVE VARIABLE SPEED	1	778561.1	1459199
10	TRACTION DRIVE	1	631904.0	1478455
10	TRACTION DRIVE	1	655408.0	1413315
11	TANK UNLOADER DRIVE	1	654013.0	1419323
12	TURNING DRUM DRIVE	1	750294.0	2001143
13	STRAW WALKER DRIVE	1	801222.0	1401231
13	STRAW WALKER DRIVE	1	653933.0	1601120

SF

			OE	
1	DRIVE GRAIN TANK	1	636021.1	1430202
2	DRIVE GRAIN TANK	1	636021.1	1430202
3	ENGINE	1	624131.0	1401081
4	HYDRAULIC PUMP DRIVE	1	633030.2	0201108
5	STRAW SHAKER	1	618123.0	0101169
6	CUTTING TABLE DRIVE	1	610197.0	0330292
7	MAIN DRIVE	2	617309.2	1403254
8	MAIN DRIVE	1	630144.0	1403323
9	TRACTION DRIVE	1	630156.0	1478450
10	MAIN DRIVE FLAT BELT	1	630043.0	/
11	MAIN DRIVE FLAT BELT	1	630025.0	/
12	MAIN DRIVE	1	630118.0	1903286

TUCANO 330 - 320

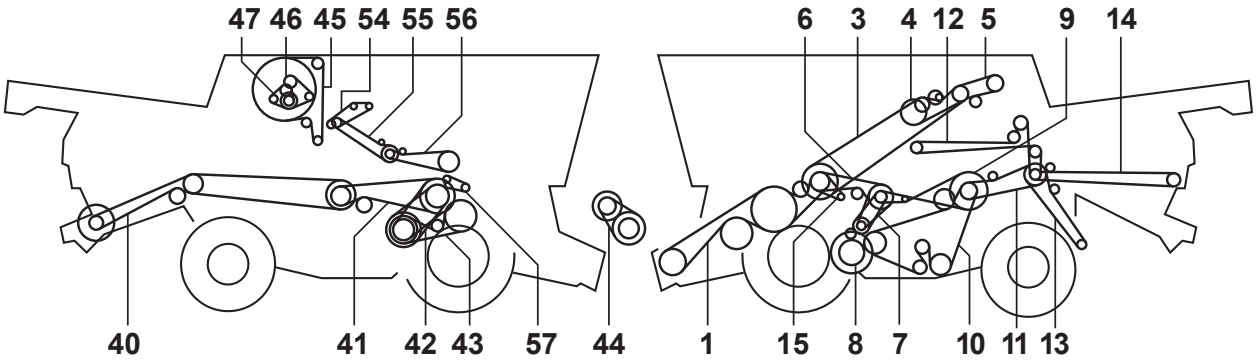

			OE	
1		2	554017.0	1402474
3		1	549099.0	1425496
4		1	667251.1	1423224
5		2	603247.1	1424183
6		1	603337.0	0202222
7		1	644362.1	1410148
8		1	644267.0	1401134
9		1	644141.1	1429343
10		1	609762.0	0323472
11		1	506671.2	1454323
12		1	644447.0	1401412
13		1	544216.1	1401241
14		1	629402.0	0301373
15		1	633030.2	0201108
40		1	544172.1	1423656
41		1	061700.1	1423319
42		1	661427.0	1499369
43		1	661220.1	1424259
44		1	661429.0	1499328
45		1	077276.0	1400290
46		1	799181.0	1485304
47		2	549752.2	1400071
54		1	553467.1	Chain
55		1	552312.0	Chain
56		1	552312.0	Chain
57		1	600981.0	Chain

TUCANO 340

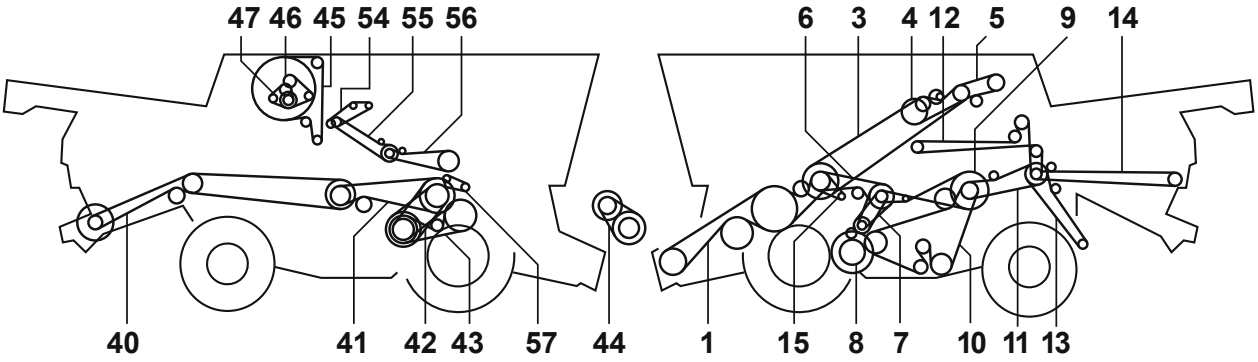

			OE	
1		2	554017.0	1402474
3		1	549099.0	1425496
4		1	667251.1	1423224
5		2	544049.1	0223179
6		1	603337.0	0202222
7		1	644362.1	1410148
8		1	538714.1	0301117
9		1	644141.1	1429343
10		1	609762.0	0323472
11		1	506671.2	1454323
12		1	644447.0	1401412
13		1	544216.1	1401241
14		1	629402.0	0301373
15		1	633030.2	0201108
40		1	544172.1	1423656
41		1	061700.1	1423319
42		1	661427.0	1499369
43		1	661220.1	1424259
44		1	661429.0	1499328
45		1	077276.0	1400290
46		1	799181.0	1485304
47		2	549752.2	1400071
54		1	553467.1	Chain
55		1	552312.0	Chain
56		1	552312.0	Chain
57		1	600981.0	Chain

TUCANO 430

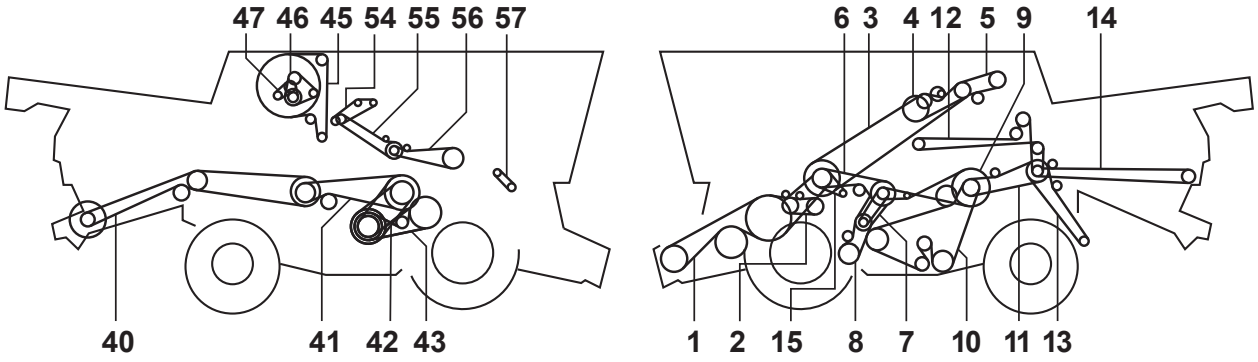

			OE	
1		2	549055.1	1402522
2		1	661031.3	0223185
3		1	549099.0	1425496
4		1	667251.1	1423224
5		2	544049.1	0223179
6		1	603337.0	0202222
7		1	644362.1	1410148
8		1	538714.1	0301117
9		1	644141.1	1429343
10		1	609762.0	0323472
11		1	506671.2	1454323
12		1	644447.0	1401412
13		1	544216.1	1401241
14		1	629402.0	0301373
15		1	633030.2	0201108
40		1	544172.1	1423656
41		1	061700.1	1423319
42		1	661427.0	1499369
43		1	661220.1	1424259
45		1	077276.0	1400290
46		1	799181.0	1485304
47		2	549752.2	1400071
54		1	549538.0	Chain
55		1	552312.0	Chain
56		1	552312.0	Chain
57		1	600981.0	Chain

TUCANO 440

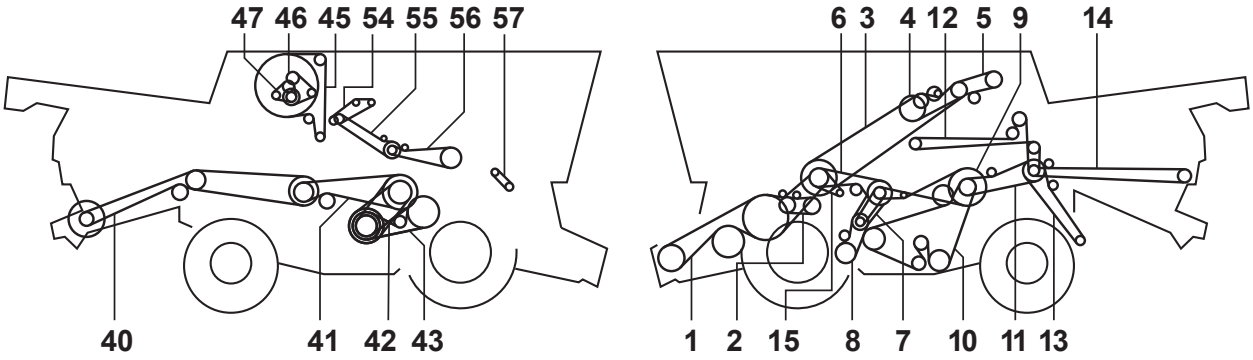

			OE	
1		2	549055.1	1402522
2		1	661031.3	0223185
3		1	549099.0	1425496
4		1	667251.1	1423224
5		2	544049.1	0223179
6		1	603337.0	0202222
7		1	644362.1	1410148
8		1	538714.1	0301117
9		1	644141.1	1429343
10		1	609762.0	0323472
10		1	549151.0	1423478
11		1	506671.2	1454323
12		1	644447.0	1401412
13		1	544216.1	1401241
14		1	629402.0	0301373
15		1	633030.2	0201108
40		1	544172.1	1423656
41		1	061700.1	1423319
42		1	661427.0	1499369
43		1	661220.1	1424259
45		1	077276.0	1400290
46		1	799181.0	1485304
47		2	549752.2	1400071
54		1	549538.0	Chain
55		1	552312.0	Chain
56		1	552312.0	Chain
57		1	600981.0	Chain

TUCANO 580

			OE	
1		1	554016.0	1402547
1		1	661378.2	1402486
2		1	661031.2	0223185
3		1	549099.0	1425496
4		1	545306.0	2823255
5		1	554361.1	2625185 EE-TECH
5		1	660504.0	1425183
5		1	660569.0	1425186
6		1	603337.0	0202222
7		1	644362.1	1410148
8		1	538714.1	0301117
9		1	603341.0	1601120
11		1	2310359.0	Chain
11		1	2311164.0	Chain
13		1	544216.1	1401241
15		1	532011.1	0101105
16		1	545216.0	☎
17		1	609762.0	0323472
18		1	554365.0	2901237
22		1	545187.0	1424433
22		1	545186.1	1524427
23		1	667958.3	1423216
24		1	661427.0	1499369
25		1	545189.0	1423296
25		1	545188.0	1423289
42		1	554172.0	1514172
43		1	661220.1	1424259
45		1	773015.0	0100303
45		1	2314602.0	☎
46		1	780160.0	0385306
47		1	549752.1	1400071
47		1	2314600.0	2600070
49		1	549011.0	1423174
51		1	837543.0	1400076
52		1	056961.0	1900106
54		1	2599606.0	☎
55		1	545394.0	1487257
56		1	545332.0	1486288
57		1	2310655.1	Chain
58		1	2310530.0	Chain

6040

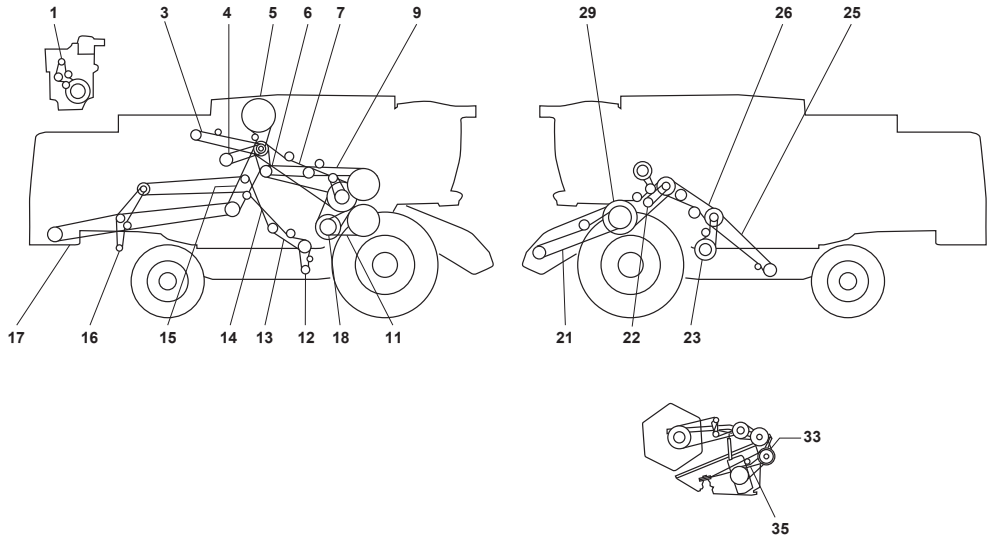

			OE	
1		1	1183361	☎
3		1	24192050	☎
4		1	16062884	0172221
5		1	1831110	0283326
6		1	16062737/30	1523170
7		1	16062883	1524432
9		1	1145055	1402412
11		1	1145049	1401204
12		1	1145332	1560234
13		1	1145699	0202141
14		1	1141789	1501475
15		1	16062738	0727299
16		1	90011721	☎
17		1	90015597	0323519
18		1	1145374	0215198
21		1	1774650	1527368
22		1	1145790	2001129
23		1	1143413	1501163
25		1	1145052	2901252
26		1	1145051	0101225
29		1	1145329	2124287
33		1	6215217	1562224
35		1	6210991	0302220
35		1	1145203	0302219
35		1	1145143	0202222
36		1	1145465	1562235
37		1	1145884	1602240
37		1	1145504	2002237
37		1	1141608	1923287 EE-TECH

6095 HTS

			OE	
1		1	1146033	2623599
2		1	90011721	☎
3		1	16062738	0727299
4		1	1145331	1560245
5		1	1145369	1560239
6		1	1145374	0215198
7		3	1145049	1401204
8		1	16062735	1926435 EE-TECH
9		1	1145055	1402412
10		1	1145072	Chain
11		1	16063413	Chain
12		1	16062737	1527180
13		1	16062841	0100303
14		1	1146013	1901188
15		1	1116096	0301183
16		1	16061769	1401499
17		1	1145318	0217116
18		1	1183141	0785267
19		1	1145025	0327375
19		1	1146076	0324385
20		2	1145790	2001129
21		3	1143413	1501163
22		1	1145087	Chain
23		1	1145052	2901252
24		2	1145989	0101222
25		2	1143410	1501135
26		1	1145329	2124287
27		1	1145884	1602240
28		1	1145504	2002237

M 88 - M 88 S

			OE	
1		1	1100903	1501193
3		1	6212870	0372232
4		1	6215195	1560302

DEUTZ-FAHR

M 600

			OE	
1	STRAW STRIPPER DRUM	1	6234476	0439222
2	UNLOADING DRIVE	1	6212915	1529205
3	TRACTION DRIVE	1	6236657	1511156
4	STRAW CHOPPER COUNTERSHAFT	1	6211034	1530380
5	PLATFORM CHANNEL	1	6311053	1530253
6	COUNTERSHAFT - PICK UP	1	1130742	0301155
7	PICK UP DRIVE	1	6210915	1401234
8	ELEVATOR DRIVE GRAIN	1	6210922	1401271
8	ELEVATOR DRIVE GRAIN	1	880022153363	0301276
9	STRAW BALER	1	1139090	1530435
10	COUNTERSHAFT - BALER	1	1139089	1430287
11	STRAW CHOPPER DRIVE	1	1139085	0302345
12		1	6212870	0372232
13	REEL DRIVE	1	6215195	1560302
14	RETURN ELEVATOR DRIVE	1	1100903	1501193
15	SHAKER SHOE DRIVE	1	1116080	0101085
15	RADIATOR FAN DRIVE	1	1139216	0273217
15	ALTERNATOR DRIVE	1	1139217	0173218

M 660 - M 770

			OE	
1	ANGULAR GEAR - STRAW STRIPPER DRUM	1	6234476	0439222
2	COUNTERSHAFT - GRAIN TANK	1	6212915	1529205
3	ANGULAR GEAR - TRAVEL DRIVE	1	6236657	1511156
4	STRAW STRIPPER DRUM - RETURN AUGER	1	6211034	1530380
5	STRAW STRIPPER DRUM - CONVEYOR PASSAGE	1	6211053	1530253
6	ANGULAR GEAR - CHOPPER TRANSMISSION	1	6211001	2602304
7	CHOPPER DRIVE / M660	1	1139082	0202261
7	CHOPPER DRIVE / M770	1	6211004	0302326
9	STRAW WALKER - GRAIN AUGER	1	6210922	1401271
10	RETURN AUGER - CHOPPER / M660	1	1139085	0302345
10	RETURN AUGER - CHOPPER / M770	1	6211010	0102415
11	STRAW STRIPPER DRUM - COUNTERSHAFT	1	1139247	1529198
15	COUNTERSHAFT - REEL DRIVE	1	6212870	0372232
16	REEL DRIVE COUNTERSHAFT	1	6215195	1560302
18	RETURN AUGER - VARIATOR	1	1100903	1501193
19	FAN DRIVE VARIABLE SPEED	1	1116080	0101085
21	BLOWER DRIVE	1	2235175	0173234
22	ALTERNATOR DRIVE	1	2235178	0173247

M 750

			OE	
1	STRAW STRIPPER DRUM	1	6234476	0439222
2	UNLOADING SYSTEM	1	6212915	1529205
3	UNLOADING SYSTEM	1	1139247	1529198
4	TRACTION DRIVE	1	6236657	1511156
5	STRAW CHOPPER DRIVE	1	6211034	1530380
6	STRAW STRIPPER DRUM	1	6211053	1530253
7	PLATFORM CHANNEL	1	1130742	0301155
8	PICK UP DRIVE	1	6210915	1401234
9	ELEVATOR SHAKER GRAIN	1	6210922	1401271
10	CHOPPER DRIVE	1	6211010	0102415
11	REEL DRIVE VARIABLE SPEED	1	6212870	0372232
12	REEL DRIVE	1	6215195	1560302
13	RETURN ELEVATOR DRIVE	1	1100903	1501193
14	SHAKER SHOE DRIVE	1	1116080	0101085
14	ALTERNATOR DRIVE	1	1139216	0273217
14	RADIATOR FAN DRIVE	1	1139220	0173232

M 900 - M 922 - M 1002

			OE	
0	BLOWER DRIVE (ENGINE) / M1002	1	2235533	1573238
0	BLOWER DRIVE (ENGINE) / M1080	1	2235254	1573238
0	GEN. DRIVE (ENGINE) / -2280 M980/922	1	1168304	0273217
0	BLOWER DRIVE (ENGINE) / M980	1	2235175	0173234
0	GENERATOR DRIVE (ENGINE) /+2281 M900-980	1	2235178	0173247
0	GENERATOR DRIVE (ENGINE) / -1980 M1002	1	2235179	0173223
0	GENERATOR DRIVE (ENGINE) /+1981 M1002/1080	1	2235180	0173223
0	BLOWER DRIVE (ENGINE) / M900/922	1	2235531	0173232
1	ENGINE - COUNTERSHAFT / M900/922/980/1080	1	6215236	1423389 EE-TECH
1	ENGINE - COUNTERSHAFT / M1002	1	6215237	0224390 EE-TECH
2	COUNTERSHAFT - FAN	1	6215197	1560225
3	THRESHING DRUM	1	6215220	1514182
4	REEL VARIATOR	1	6215217	1562224
5	SHAFT KNIFE DRIVE	1	6212919	1529276
6	PLATFORM FEED CHANNEL	1	6210989	2002211
7	COUNTERSHAFT - TRAVEL VARIATOR /-4232 M900-1002	1	6215213	1513221
7	COUNTERSHAFT - TRAVEL VARIATOR /+4233 M980/1080	1	6215215	1813232
8	COUNTERSHAFT GRAIN TANK	1	6212924	1519193
9	TENS ARM /M900+2660.M922+2706.M1002+2827	1	6210991	0302220
9	TENS ARM /M900-2659.M922-2530.M1002-2826	1	6212925	1519244
10	RETURNS ELEVATOR	1	6210991	0302220
10	RETURNS ELEVATOR	1	6212925	1519244
11	COUNTERSHAFT - STRAW STRIPPER DRUM	1	6215250	0224232 EE-TECH
12	GRAIN ELEVATOR	1	6210921	2301262
13	CHOPPER DRIVE	1	6211001	2602304
14	CHOPPER DRIVE	1	6211006	1402336

M 1000 - M 1200

			OE	
0	REEL DRIVE VARIABLE SPEED	1	6215217	1562224
0	CUTTING MECHANICAL COUNTERSHAFT - KNIFE DRIVE	1	6210991	0302220
1	STRAW STRIPPER DRUM	1	1111612011900	1581456
2	TRACTION DRIVE	2	6241305	0312280
3	GEARBOX GRAIN TANK	1	6241147	1254331
4	STRAW STRIPPER DRUM	1	880078596410	1519340
5	RETURN ELEVATOR DRIVE	1	6240268	1505295
6	STRAW STRIPPER DRUM	1	6211026	0130272
7	PLATFORM FEED CHANNEL	1	6211026	0130272
8	COUNTERSHAFT - FEED CHANNEL	1	6210915	1401234
9	COUNTERSHAFT - PICK UP	1	6210915	1401234
10	HYDRAULIC STEERING	1	1139231	0422134
11	COUNTERSHAFT - BALER	1	1139301	1402336
12	BALER	1	6210997	0302251
13	REEL DRIVE COUNTERSHAFT	1	6215196	☎
14	COUNTERSHAFT - FAN DRIVE	1	6240407	0102161
15	COUNTERSHAFT - FAN DRIVE	1	6215199	1560238
16	ALTERNATOR DRIVE	1	1139218	0373225
17	RADIATOR FAN DRIVE	1	1139221	0173234
17	RADIATOR FAN DRIVE	1	1139222	☎
18	HYDRAULIC PUMP DRIVE	1	1139223	0173212
19	THRESHING DRUM VARIATOR DRIVE	1	6215222	0714187

M 1102 - M 1202

			OE	
0	REEL DRIVE VARIABLE SPEED	1	6215217	1562224
0	CUTTING MECHANICAL COUNTERSHAFT - KNIFE DRIVE	1	6210991	0302220
1	ENGINE - STRAW STRIPPER DRUM	1	6528420	1581456
2	ENGINE - TRAVEL SPEED VARIATOR	2	6241305	0312280
3	DRIVE GRAIN TANK	1	6241147	1254331
4	STRAW STRIPPER DRUM - COUNTERSHAFT	1	6212933	1519340
5	COUNTERSHAFT - RETURN ELEVATOR	1	6240268	1505295
6	STRAW STRIPPER DRUM - COUNTERSHAFT	1	6211026	0130272
7	STRAW STRIPPER DRUM - FEED CHANNEL	1	6211031	1503267
8	CHOPPER DRIVE	1	1141798	0202361
9	CHOPPER DRIVE	1	1136747	2619370
10	ENGINE - COMPRESSOR	1	6212866	0372223
11	FAN DRIVE VARIABLE SPEED	1	6215199	1560238
12	THRESHING DRUM VARIATOR DRIVE	1	6215222	0714187
13	BLOWER DRIVE	1	2235254	1573238
14	ALTERNATOR DRIVE	1	2235180	0173223

M 1300 - M 1302 - 1302 H

			OE	
0	REEL VARIATOR	1	6215217	1562224
0	CUTTING MECH. COUNTERSHAFT - KNIFE DRIVE	1	6210991	0302220
1	STRAW STRIPPER DRUM	1	6215248	0324377
2	GRAIN TANK DISCHARGE	1	6215234	0323430
3	THRESHING VARI-DRIVE	1	6215222	0714187
3	THRESHING VARI-DRIVE	1	6215221	1514192
4	COUNTERSHAFT THRESHING DRUM	1	6256381	1401194
4	COUNTERSHAFT THRESHING DRUM	1	1210712015910	0101187
5	SHAKER SHOE FAN DRIVE	1	1139241	1537326
6	FAN DRIVE	1	6210869	0200124
7	CHOPPER TRANSMISSION	1	1129970	1519452
8	CHOPPER TRANSMISSION	1	1210737011900	0302240
9	GRAIN TANK CLUTCH	1	6211014	1530164
10	FEED CHANNEL	1	6215233	1923287 EE-TECH
11	SHAKER TRANSMISSION	2	6256619	1601218
12	RETURNS ELEVATOR	1	6210917	1401241
13	SHAKER SHOE DRIVE	1	6256714	0301155
14	MAIN DRIVE	2	6255583	1602382
15	TRACTION VARI-DRIVE	1	6215222	0714187
16	GRAIN TANK DISCHARGE	1	621852	0301360

M 1600 - M 1620 - M 1630

			OE	
0		1	6211014	1530164
0		1	6211034	1530380
0		1	6215242	0223404 EE-TECH
0		1	1141613	1527171
0		1	1141645	1523480
0		2	2234343	0173240
0		1	6210890	2001129
0		1	6212866	0372223
1	STRAW STRIPPER DRUM	1	6215259	1525391 EE-TECH
2	GRAIN TANK DISCHARGE	1	6215235	0323440 EE-TECH
3	THRESHING DRUM VARIATOR	1	6215222	0714187
3	THRESHING DRUM VARIATOR	1	6215221	1514192
4	COUNTERSHAFT THRESHING DRUM	1	6256546	1901188
4	COUNTERSHAFT THRESHING DRUM	1	6256381	1401194
5	SHAKER SHOE FAN	1	1139242	1537344
6	FAN DRIVE	1	6210869	0200124
7	ENGINE - DYNAMO	1	1139216	0273217
8	CHOPPER TRANSMISSION	2	6257897	1502504
9	CHOPPER TRANSMISSION	1	1210737011900	0302240
10	KNIFE DRIVE	1	6212919	1529276
11	FEED CHANNEL	1	6215233	1923287 EE-TECH
12	SHAKER TRANSMISSION	2	6256619	1601218
13	RETURNS ELEVATOR	1	6210917	1401241
14	SHAKER SHOE DRIVE	1	6256714	0301155
15	REEL VARI-DRIVE	1	890009461649	1562224

M 2385

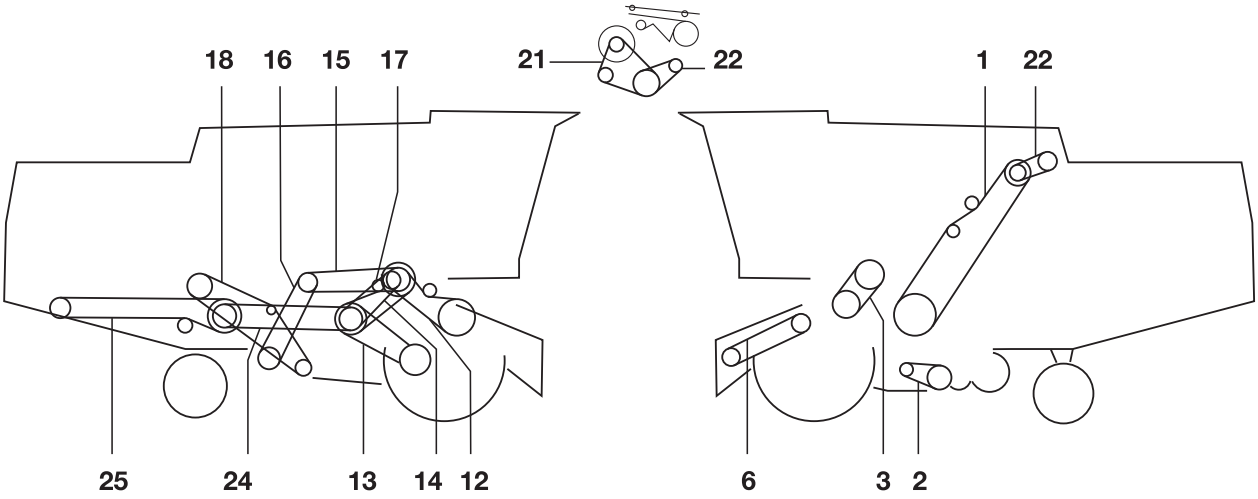

			OE	
0	CUTTING MECHANICAL COUNTERSHAFT - KNIFE DRIVE	1	6210991	0302220
0	REEL DRIVE VARIABLE SPEED	1	6215217	1562224
1	MAIN DRIVE	1	6215243	1523417 EE-TECH
1	MAIN DRIVE	1	6285949	1524419
2	COUNTERSHAFT - FAN DRIVE	1	6215197	1560225
3	STRAW STRIPPER DRUM - THRESHING DRUM	1	6215220	1514182
6	FEEDER CHANNEL - COUNTERSHAFT	1	6215205	0203245
12	STRAW STRIPPER DRUM - FEED CHANNEL	1	6215204	2610252
13	COUNTERSHAFT - TRAVEL SPEED VARIATOR	1	6215216	1513240
14	COUNTERSHAFT - GRAIN TANK	1	6212924	1519193
15	STRAW STRIPPER DRUM - TENSION ARM	1	6210991	0302220
16	RETURN ELEVATOR - TENSION ARM	1	6210991	0302220
17	COUNTERSHAFT - STRAW STRIPPER DRUM	1	6215250	0224232 EE-TECH
18	STRAW WALKER - GRAIN ELEVATOR	1	6210927	1401314
21	BLOWER DRIVE	1	2235532	1573238
22	ALTERNATOR DRIVE	1	2235180	0173223
23	ENGINE - COMPRESSOR	1	1139233	0372234
24	CHOPPER DRIVE	1	6273236	0202285
25	CHOPPER DRIVE	1	6273237	1502392

M 2480 - M 2780

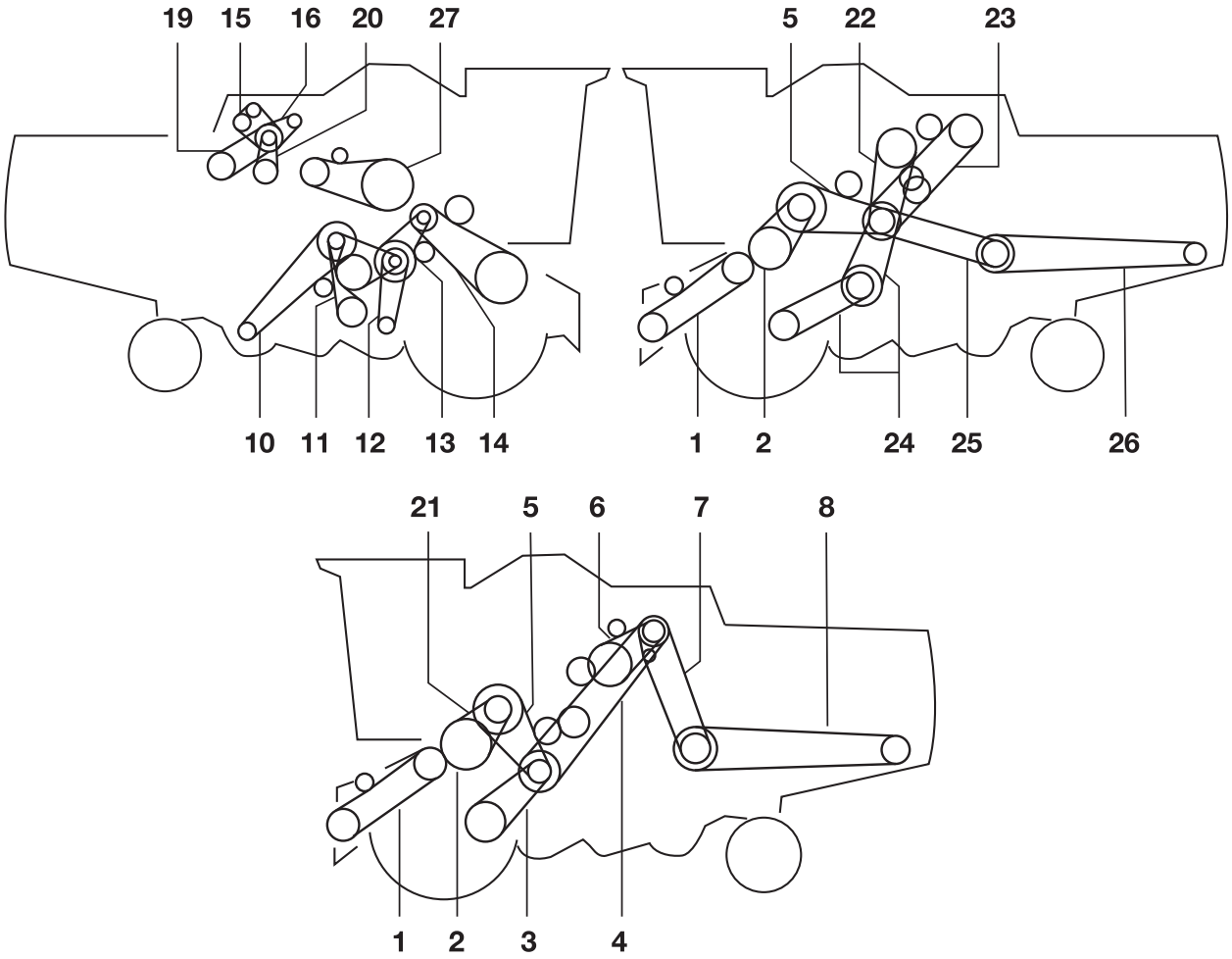

			OE	
0	CUTTING MECH. COUNTERSHAFT - KNIFE DRIVE	1	6210991	0302220
0	REEL VARIATOR	1	6215217	1562224
1	FEED CHANNEL - COUNTERSHAFT	1	6215205	0203245
2	STRAW STRIPPER DRUM - THRESHING DRUM	1	6215220	1514182
3	DRIVING SPEED VARIATOR / M2580-M2685	1	6215214	1513212
4	ENGINE - COUNTERSHAFT / M2580.2680.2780H	1	6215258	1524411 EE-TECH
4	ENGINE - COUNTERSHAFT / M2685.2780	1	6215262	1525413 EE-TECH
5	COUNTERSHAFT - STRIPPER DRUM / M2580 - M2780H	1	6215239	0323225 EE-TECH
5	COUNTERSHAFT - STRAW STRIPPER DRUM	1	6215253	0224247 EE-TECH
7	ENGINE - CHOPPER TRANSMISSION / W /-100	1	6210851	0202235
7	ENGINE - CHOPPER TRANSMISSION / +102	1	6215245	1527283
8	CHOPPER TRANSMISSION / M2580.2680	1	1139258	2619416
8	CHOPPER TRANSMISSION / M2685.2780H.2780	1	1139260	1519526
10	COUNTERSHAFT - RETURN ELEVATOR	1	6210922	1401271

M 2480 - M 2780 (CONTINUED)

			OE	
10	COUNTERSHAFT - RETURNS ELEVATOR / MAIZE	1	6210923	0501273
11	COUNTERSHAFT - WALKER + SHAKER SHOE DRIVE	1	6215255	1524314 EE-TECH
12	COUNTERSHAFT - FAN	1	6215202	1510174
13	STRAW STRIPPER DRUM - COUNTERSHAFT	1	6215240	1423198
14	STRIPPER DRUM - FEED CHANNEL / M2685.2780.2780H	1	6215238	0323270 EE-TECH
14	STRIPPER DRUM - FEED CHANNEL / M2480-M2680	1	6215203	0203236
15	BLOWER DRIVE / M2685 - 2780H.2780	2	2234343	0173240
15	BLOWER DRIVE / M2480 - M2680	1	2235532	1573238
16	GENERATOR DRIVE	1	2235180	0173223
19	ENGINE - COMPRESSOR	1	1139233	0372234
20	ENGINE - FAN / M2480 - M2685	1	1139204	0172195
22	COUNTERSHAFT - GRAIN TANK / M2480	1	6210975	0102174
23	ENGINE - COUNTERSHAFT / M2480	1	6215257	0724325 EE-TECH
25	COUNTERSHAFT - CHOPPER TRANSMISSION / W/M2480	1	088-007753.6-350	☎
26	CHOPPER TRANSMISSION - CHOPPER / M2480	1	1139259	2619416
27	GRAIN TANK DRIVE / + 437 M2580 - M2780H	1	6210990	0202209
27	GRAIN TANK DRIVE / + 437 M2480	1	6210993	0302227

M 3280

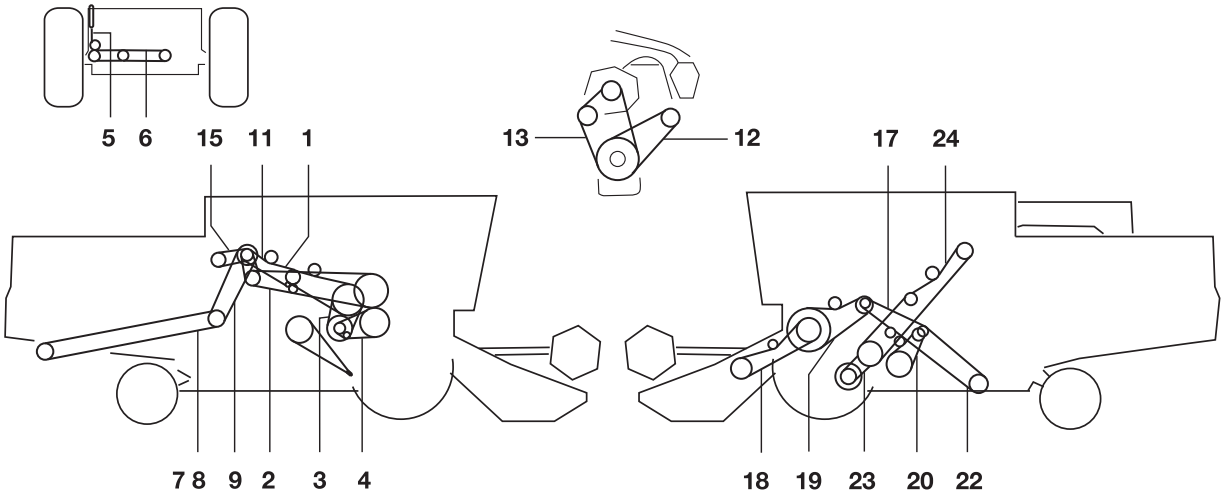

			OE	
1		1	1141591	0324377
2		1	1141666	1402363
3		1	6215222	0714187
4		1	6256546	1901188
5		1	1139241	1537326
6		1	6210890	2001129
8		1	1141645	1523480
9		1	6257898	0302240
11		1	1141613	1527171
12		1	2235180	0173223
13		1	2234343	0173240
15		1	6212866	0372223
17		2	6256619	1601218
18		1	1141595	0202285
18		1	1141615	1527332
19		1	1141608	1923287 EE-TECH
20		1	6256714	0301155
22		1	1141971	1514192
23		1	1141971	1514192
24		1	6215244	1527432

M 3480 - M 3540

			OE	
1		1	1141816	1423274
2		1	1141819	1123301
3		1	1141820	1559229
4		1	1141850	1401336
5		1	1141909	1524401 EE-TECH
6		1	1141912	1424227
7		1	1141917	1402217
8		1	1141918	1523306 EE-TECH
9		1	1141938	0102184
10		1	1141944	1514231
11		1	1141958	0202235
12		2	2234343	0173240
13		1	6211031	1503267
14		1	6215214	1513212
15		1	6215222	0714187

M 3570 - M 3578

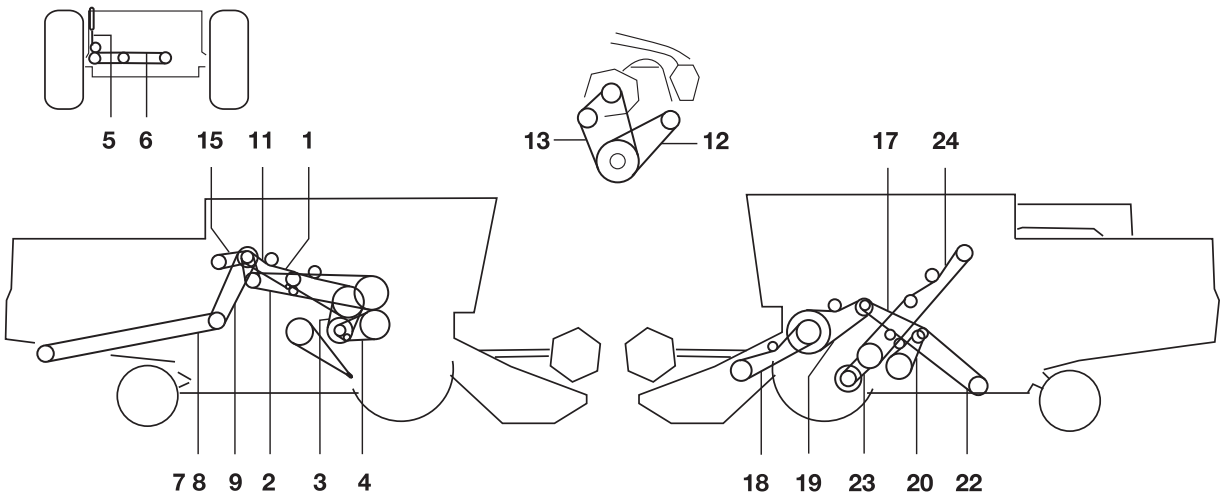

			OE	
0		1	1141971	1514192
0	REEL VARIATOR	1	6215217	1562224
0	CUTTING MECH. COUNTERSHAFT - KNIFE DRIVE	1	6210991	0302220
0		2	6257898	0302240
1	STRAW STRIPPER DRUM	1	1141591	0324377
2	GRAIN TANK EMPTYING	1	1141666	1402363
3	THRESHING DRUM - VARIATOR	1	6215222	0714187
4	COUNTERSHAFT - THRESING DRUM	1	6256546	1901188
5	STRAW WALKERS TRANSMISSION - FAN	1	1139241	1537326
6	FAN - CLEANING FAN	1	6210890	2001129
8	STRAW CHOPPER - STRAW HOOD	1	1141645	1523480
9	ENGINE - CHOPPER TRANSMISSION	1	1210737011900	0302240
11	ENGINE - GRAIN TANK CLUTCH / M3570	1	6211014	1530164
11	ENGINE - GRAIN TANK CLUTCH / M3580	1	1141613	1527171
12	GENERATOR DRIVE	1	2235180	0173223
13	BLOWER DRIVE	2	2234343	0173240
15	COMPRESSOR - TYPE COOLING PLANT	1	6212866	0372223
17	STRAW STRIPPER DRUM - WALKERS TRANSMISSION	2	6256619	1601218
18	CUTTING TABLE DRIVE	1	1141595	0202285
18	MAIZE PICKING - ATTACHMENTS DRIVE	1	1141615	1527332
19	STRAW STRIPPER DRUM - FEED CHANNEL	1	1141608	1923287 EE-TECH
20	WALKERS TRANSMISSION - SHAKER SHOE TRANSMISSION	1	6256714	0301155
22	WALKERS TRANSMISSION - RETURN ELEVATOR	1	6210917	1401241
23	TRAVEL SPEED VARIATOR	1	6215223	0714187
24	ENGINE - COUNTERSHAFT	1	6215244	1527432

M 3580

			OE	
1		1	1139241	1537326
2		1	1141591	0324377
3		1	1141613	1527171
4		1	1141645	1523480
5		1	1141666	1402363
6		1	1141789	1501475
7		1	1141971	1514192
8		1	2234343	0173240
9		1	2235180	0173223
10		1	6210890	2001129
11		1	6211034	1530380
15		2	6256619	1601218
12		1	6212866	0372223
14		1	6256546	1901188
16		1	6256714	0301155
13		1	6215222	0714187
17		1	6257898	0302240

M 3610

			OE	
1	ENGINE - STRAW STRIPPER DRUM / M3610	1	6211034	1530380
2	REEL DRIVE VARIABLE SPEED	1	6215217	1562224
3		1	2235177	1573242
4		1	6256714	0301155
5		1	6256546	1901188
6		2	6256619	1601218
7		1	1141789	1501475
8	STRAW CHOPPER - STRAW HOOD / M3610	1	1141941	1524289
9		1	1141591	0324377
10	CUTTING MECHANICAL COUNTERSHAFT - KNIFE DRIVE	1	6210991	0302220
11		1	1141666	1402363
12		1	1141613	1527171
13		1	6215222	0714187
14		1	1139241	1537326
15		1	1139242	1537344
16		1	1141645	1523480
17		2	2234343	0173240
18		1	2235180	0173223
19		1	6210890	2001129
20		1	6212866	0372223
21		2	6257898	0302240

M 3630 - M 3640

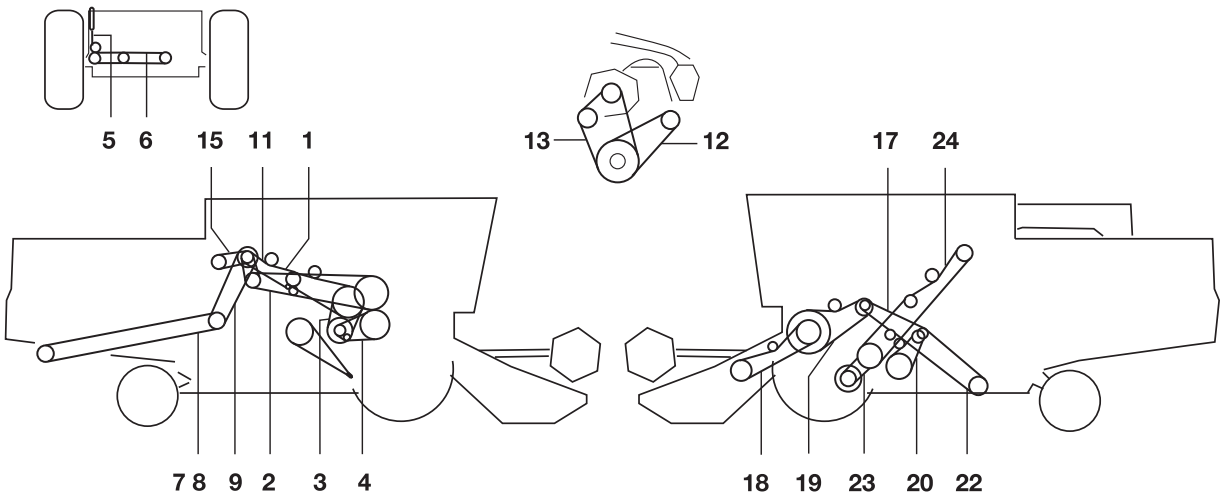

			OE	
0		1	1141510	1425378 EE-TECH
0		1	1141789	1501475
0		1	1141530	1501527
0		1	1141941	1524289
0		1	1141591	0324377
0		1	1141613	1527171
0		1	1149241	☎
0		1	6212866	0372223
0		2	6257898	0302240
1	ENGINE - STRAW STRIPPER DRUM / M3610	1	6215248	0324377
2	ENGINE - GRAIN TANK EMPTYING	1	1141666	1402363
3	THRESING DRUM - VARIATOR	1	6215222	0714187
4	COUNTERSHAFT - THRESING DRUM	1	6256546	1901188
5	STRAW WALKERS TRANSMISSION - FAN	1	1139242	1537344
6	FAN - CLEANING FAN	1	6210890	2001129
8	STRAW CHOPPER - STRAW HOOD / M3610	1	1141645	1523480
8	STRAW CHOPPER - STRAW HOOD / M3630/M3640	1	1141749	1523568
9	ENGINE - CHOPPER TRANSMISSION	1	1210737011900	0302240
11	ENGINE - GRAIN TANK CLUTCH	1	1141613	1527171
12	GENERATOR DRIVE / TYP 6204	1	2235180	0173223
13	BLOWER DRIVE / +263 TYPE 6204	1	2235177	1573242
13	BLOWER DRIVE / -262 TYPE 6204	2	2234343	0173240
15	COMPRESSOR - TYPE COOLING PLANT	1	1139229	0372223
16	GENERATOR DRIVE / TYPE 6208	1	2235713	0173208
17	STRAW STRIPPER DRUM - WALKERS TRANSMISSION	2	6256619	1601218
18	CUTTING TABLE DRIVE	1	1141595	0202285
18	MAIZE PICKING ATTACHMENTS DRIVE	1	1141615	1527332
19	STRAW STRIPPER DRUM - FEED CHANNEL	1	1141608	1923287 EE-TECH
19	STRAW STRIPPER DRUM - FEED CHANNEL MAIZEEQ	1	6215268	1524289
20	WALKERS TRANSMISSION - SHAKER SHOE TRANSMISSION	1	6256714	0301155
22	WALKERS TRANSMISSION - RETURNS ELEVATOR	1	6210917	1401241

POWERLINER 4030 - 4035

			OE	
1		1	6215217	1562224
2		1	2235254	1573238
3		1	1145263	0301373
4		1	1145262	0723221 EE-TECH
5		1	6215239	0323225 EE-TECH
6		1	1145260	0323244
7		1	1141816	1423274
8		1	1145226	0423318 EE-TECH
9		1	1145261	1224221
10		1	6215258	1524411 EE-TECH
11		1	1141917	1402217
12		1	1145224	1510184
13		1	1141971	1514192

STARLINER 4040 - 4045

			OE	
1		1	6256714	0301155
2		1	6256546	1901188
3		2	6256619	1601218
4		1	1141608	1923287 EE-TECH
5		1	1141941	1524289
6		1	1141591	0324377
7		1	1141666	1402363
8		1	1141613	1527171
9		1	6215244	1527432
10		1	6215222	0714187
11		1	1145318	0217116
12		1	1139241	1537326
13		1	1141645	1523480
14		1	1145331	1560245
15		1	2235180	0173223
16		1	6210890	2001129
17		1	6212866	0372223
18		2	6257898	0302240

TOPLINER 4060 - 4065

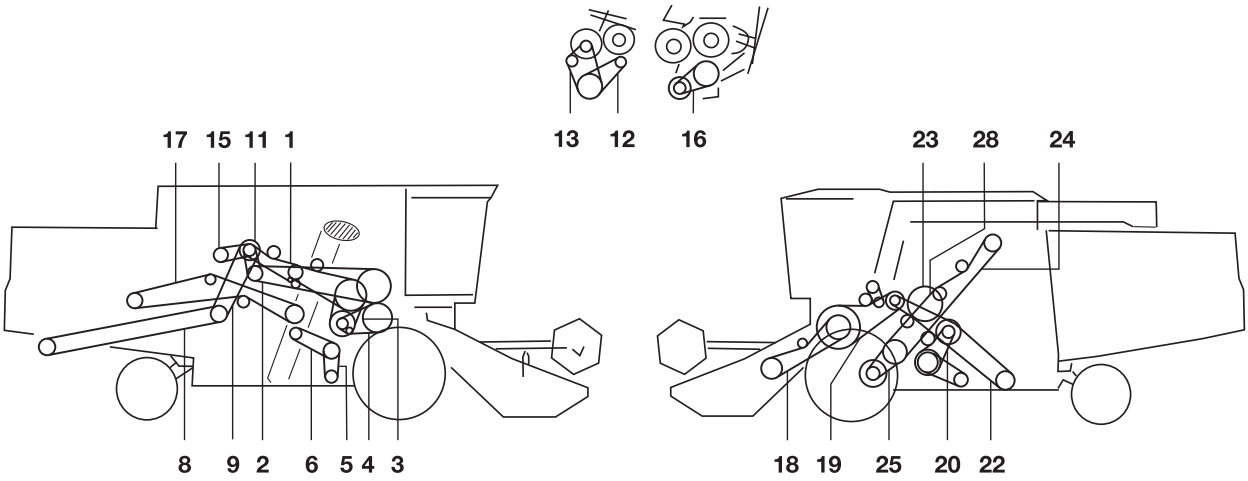

			OE	
1	ENGINE - STRAW STRIPPER DRUM	1	1145050	1524427
2	ENGINE - GRAIN TANK EMPTYING	1	1145055	1402412
3	THRESHING DRUM VARIATOR DRIVE	1	1145026	0215198
4	COUNTERSHAFT - THRESHING DRUM	3	1145049	1401204
5	FAN DRIVE VARIABLE SPEED - CLEANING FAN	1	1145097	1510140
6	STRAW WALKER - VARIATOR	1	1145202	1560245
8	FOR STRAW CHOPPER INTEGRATED	1	1145187	0223572
8	FOR STRAW CHOPPER INTEGRATED	1	1145188	2623489
9	ENGINE - CHOPPER TRANSMISSION	2	6257898	0302240
11	ENGINE - GRAIN TANK CLUTCH	1	1141613	1527171
12	ALTERNATOR DRIVE	1	2235180	0173223
13	BLOWER DRIVE	1	2235177	1573242
13	BLOWER DRIVE	2	2234343	0173240
15	COMPRESSOR - TYPE COOLING PLANT	1	6212866	0372223
17	STRAW WALKER DRIVE	1	1145053	1401499
17	STRAW WALKER DRIVE	1	1145054	0301447
18	PICKING - ATTACHMENTS DRIVE (MAIZE)	1	1145025	0327375
18	CUTTING TABLE DRIVE	1	1143412	0102328
18	CUTTING TABLE DRIVE	1	1145211	0302326
19	STRAW STRIPPER DRUM - FEED CHANNEL	1	1141608	1923287 EE-TECH
19	EQUIPMENT (MAIZE)	1	1141941	1524289
20	SHAKER SHOE - WALKER TRANSMISSION	3	1143413	1501163
21	STRAW STRIPPER DRUM - WALKER TRANSMISSION	2	1145051	0101225
22	RETURN ELEVATOR - WALKER TRANSMISSION	1	1145052	2901252
23	STRAW SHIPPER DRUM - TURBO - SEPARATOR	2	1143410	1501135
24	ENGINE - COUNTERSHAFT	1	1145102	1527454
25	TRAVEL SPEED VARIATOR	1	1141944	1514231

TOPLINER 4070 - 4075- 4080 - 4090

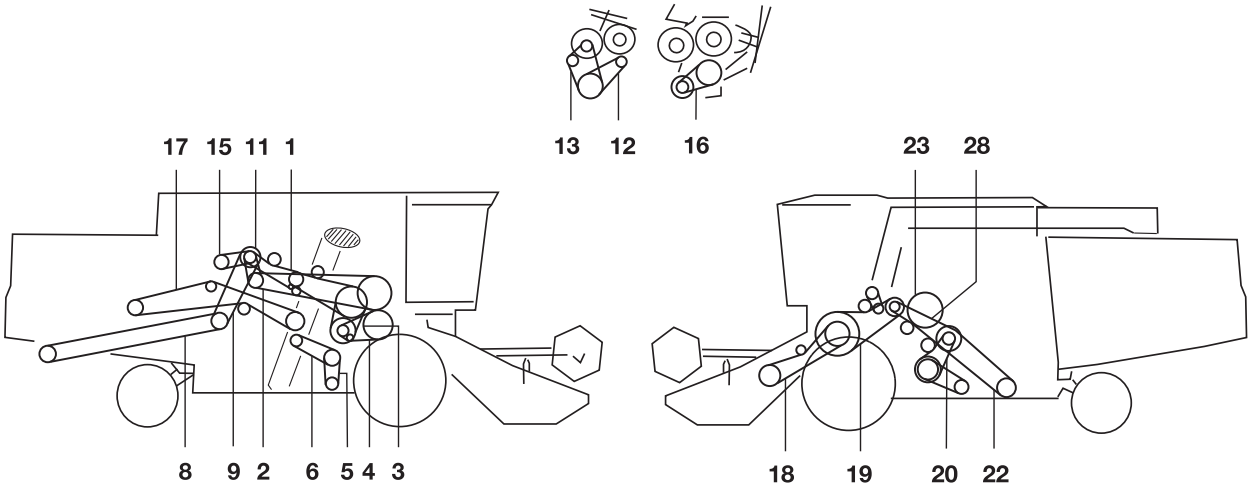

			OE	
1	STRAW STRIPPER DRUM	1	1145056	1525431
1	STRAW STRIPPER DRUM	1	1145057	0326432
2	ENGINE - GRAIN TANK EMPTYING	1	1145055	1402412
3	THRESHING DRUM VARIATOR	1	1145374	0215198
4	COUNTERSHAFT THRESHING DRUM	3	1145049	1401204
5	FAN SPEED VARIATOR - CLEANING FAN	1	1145332	1560234
5	FAN SPEED VARIATOR - CLEANING FAN	1	1145369	1560239
6	STRAW WALKERS TRANSMISSION - VARIATOR	1	1145331	1560245
8	CHOPPER DRIVE	1	1145187	0223572
8	CHOPPER DRIVE	1	1145188	2623489
9	CHOPPER TRANSMISSION (SET)	2	1145475	0302240
9	CHOPPER TRANSMISSION	1	1145479	0227294
11	GRAIN TANK CLUTCH	1	1141613	1527171
12	GENERATOR DRIVE FOR 4070. 4075	1	2235180	0173223
13	BLOWER DRIVE FOR 4070/4075	1	2235177	1573242
15	COOLING PLANT	1	1145318	0217116
15	COOLING PLANT	1	6212866	0372223
16	GENERATOR DRIVE FOR 4075/4080/4090	1	2237477	0173210
17	STRAW WALKER DRIVE	1	1145053	1401499
17	STRAW WALKER DRIVE	1	1145054	0301447
18	CUTTING TABLE DRIVE	1	1145025	0327375
19	FEED CHANNEL	1	1141941	1524289
19	FEED CHANNEL	1	1145329	2124287
20	SHAKER SHOE TRANSMISSION	3	1143413	1501163
22	RETURNS ELEVATOR	1	1145052	2901252
23	STRAW STRIPPER DRUM	2	1143410	1501135
24	STRAW STRIPPER DRUM	2	1145051	0101225

TOPLINER 8XL

			OE	
1		1	1145742	1549263
2		1	1145744	0749465 EE-TECH
3		1	1145766	1515202
4		2	1145980	1523230
5		3	1145960	1401122
6		2	1145789	2001162
7		1	1145332	1560234
8		1	1145724	1560245
9		1	1145961	1424215
10		1	1145087	Chain
11		1	1145877	1527206
12		1	1145633	2602381
13		1	1145865	1524312 EE-TECH
14		1	1145866	1424560
15		1	1146027	☎
16		1	1141643	2602287
17		1	1145883	Chain
18		1	1145699	0202141
19		1	1145800	Chain
20		1	1145792	0102328
21		2	1145959	2001143
22		1	1145093	Chain
23		1	1145823	☎
23		1	1141904	1512154
24		1	1180173	0173227
25		1	1145814	Chain
26		1	1145921	☎

D 500 - D 600

			OE	
1	CRANK PULLEY - FEED BEATER	1	41977500	0104381
2	STRIPPER BEATER - SHAKER	1	41974300	0104282
3	ELEVATOR DRIVE GRAIN	1	41934700	1401199
4	RETURN ELEVATOR DRIVE	1	41932800	0201177
5	THRESHING DRUM VARIATOR DRIVE	1	41995400	☎
6	FAN SECOND CLEANER	1	41974300	0104282
7	TWIN V-BELT PULLEY	1	41966100	1601185
8	REEL DRIVE	1	41969000	☎
8	REEL DRIVE	1	41969400	☎
9	FILLING AUGER	1	41964500	1401125
10	COUNTERSHAFT DRIVE	1	41981300	0102114
11	MAIN BLOWER	1	41944200	1401405
12	STRAW BALER	1	41958700	☎
12	STRAW BALER	1	41988400	☎
13	PICK UP DEVICE	1	41943200	0301360
14	HYDRAULIC PUMP DRIVE	1	41902600	1472184

D 900 - D950

			OE	
1	ENGINE	1	41998700	0139211
2	COUNTERSHAFT (PRIMARY)	1	41996400	0372260
3	HYDRAULIC PUMP DRIVE	1	41922200	0101066
4	GEAR BOX	1	41994300	0114136
5	REEL DRIVE - VARIATOR PULLEY	1	41962000	2601079
6	REEL DRIVE	1	41939300	0401279
7		1	41926100	0401111
8	COUNTERSHAFT DRIVE	1	41903000	0100057
9	FEEDER AUGER	1	41982400	0402159
10	MAIN BLOWER SHAKER BEATER	1	41974300	0104282
11	FILLING AUGER	1	41938900	0201264
12	THRESHING DRUM/FAN	1	41974300	0104282
13	ELEVATOR DRIVE GRAIN	1	41336500	☎
14	BEATER RETURN ELEVATOR	1	41932800	0201177
15		1	41904900	1900097
16	ROLLER CHAIN	1	/	/
17	COUNTERSHAFT DRIVE	1	41954800	2002237
18	COUNTERSHAFT DRIVE	1	41995700	0110196
19	DRIVING GEAR FOR AUGER	1	41955800	0202310
20		1	41962600	0101088
21	PICK UP DEVICE	1	41964600	1901133
22	STRAW CUTTER	1	41957900	0102497

DRONNINGBORG

D 1200 - D 1250

			OE	
1	FILLING ELEVATOR	1	41935700	0301211
2	RETURN AUGER (UPPER) - SPREADER AUGER	1	41933300	0301183
3	ELEVATOR - RETURN ELEVATOR GRAIN	1	41932600	2301174
4	COUNTERSHAFT DRIVE	1	41998900	0139225
5	HYDRAULIC PUMP DRIVE	1	41996700	1118081
6	DRIVING GEAR	1	41996300	0137367
7	AWNER SHAFT	1	41974300	0104282
8	STRAW SHAKER	1	41966500	0101200
10	FEEDER SHAFT (UPPER)	1	41937300	1401231
11	KNIFE DRIVE	1	41964400	1401129
12	FEEDER AUGER	1	41953700	2002167
13	HYDRAULIC DRIVE VARIATOR	1	41996500	1637240
15	SPRING LOADED DRIVE VARIATOR	1	41994300	0114136
16	STRAW GUIDE	1	41926100	0401111
17	STRAW CHOPPER DRIVE	1	41959100	0202576
18	THRESHING DRUM VARIATOR DRIVE	1	41994900	0113250
20	STRAW GUIDE	1	41996100	0372286
21	MAIN FAN VARIABLE SPEED DRIVE	1	41928100	2101138
22	MAIN FAN	1	41930300	0101151
24	FEEDER SHAFT (UPPER)	1	41954800	2002237
25	PICK UP DRUM	1	41964600	1901133

D 1500 - D 1800

			OE	
1	FAN DRIVE	1	41928100	2101138
2	COUNTERSHAFT DRIVE	1	41996400	0372260
4	FAN DRIVE	1	41974300	0104282
5	DRIVING GEAR	1	41996600	0137352
6	HYDRAULIC DRIVE VARIATOR	1	41996500	1637240
7	GEAR BOX	1	41994300	0114136
9	ELEVATOR DRIVE GRAIN	1	41931900	☎
10	SHAKER SHAFT DRIVE	1	41966900	0201215
11	FILLING AUGER	1	41997600	0137334
12	RETURN AUGER (UPPER)	1	41965200	☎
13	FEEDER SHAFT	1	41967400	☎
14	FEEDER AUGER	1	41953700	2002167
20	RETURN AUGER (UPPER)	1	41923000	☎
21	THRESHING DRUM VARIATOR DRIVE	1	41995200	1514182
22	THRESHING DRUM VARIATOR DRIVE	1	41981900	0102148
23	MAIN BLOWER - VARIATOR PULLEY	1	41932900	☎
24	MAIN BLOWER	1	41931900	☎
25	HYDRAULIC PUMP DRIVE FOR HYDRAULIC STEERING	1	41905200	0200098
27	FEEDER SHAFT	1	41967400	☎
29	CRANK PULLEY	1	41964400	1401129

D 1600 - D 1650

			OE	
1	FILLING ELEVATOR	1	41935700	0301211
2	RETURN AUGER (UPPER) - SPREADER AUGER	1	41933300	0301183
3	ELEVATOR - RETURN ELEVATOR GRAIN	1	41932600	2301174
4	COUNTERSHAFT DRIVE	1	41998900	0139225
5	HYDRAULIC PUMP DRIVE	1	41996700	1118081
6	DRIVING GEAR	1	41996300	0137367
7	AWNER SHAFT	1	41974300	0104282
8	STRAW SHAKER	1	41966500	0101200
10	FEEDER SHAFT (UPPER)	1	41937300	1401231
11	KNIFE DRIVE	1	41964400	1401129
12	FEEDER AUGER	1	41953700	2002167
13	HYDRAULIC DRIVE VARIATOR	1	41996500	1637240
15	SPRING LOADED DRIVE VARIATOR	1	41994300	0114136
16	STRAW GUIDE	1	41926100	0401111
17	STRAW CHOPPER DRIVE	1	/	1602631
18	THRESHING DRUM VARIATOR DRIVE	1	41994900	0113250
20	STRAW GUIDE	1	41996100	0372286
21	MAIN FAN VARIABLE SPEED DRIVE	1	41928100	2101138
22	MAIN FAN	1	41930300	0101151
24	FEEDER SHAFT (UPPER)	1	41954800	2002237
25	PICK UP DRUM	1	41964600	1901133

D 1900 (T27978)

			OE	
1		1	41983500	0102184
2		1	41964300	1401122
5		1	41950600	1902206
6		1	41950900	0102174
9		1	41987200	2602194
10		1	41935200	1601205
12		1	41928900	0301141
13		1	41942100	1601349
14		1	41987300	1602396
15		1	41912200	1601066
18		1	41935900	1601218
19		1	41950400	2602194
20		1	41929200	2001146

D 2250

			OE	
1	FEEDER AUGER	1	41983500	0102184
1	FEEDER AUGER	1	41983500	0102184
2	COUNTERSHAFT DRIVE	1	41964300	1401122
2	KNIFE DRIVE	1	41964300	1401122
3	FEEDER SHAFT (UPPER)	1	41955400	0202275
3	COUNTERSHAFT DRIVE	1	41955400	0202275
4	FEEDER SHAFT (UPPER)	1	41993900	0110264
4	FEEDER SHAFT (UPPER)	1	41994000	0203294
5	ECCENTRIC SHAFT DRIVE	1	41982200	0402155
5	ELEVATOR DRIVE GRAIN	1	41954100	0202209
6	CENTER SHAFT	1	41987100	0102176
6	STRAW SHAKER - RETURN AUGER	1	41989900	0105410
7	ENGINE	1	41994600	1424250 EE-TECH
7	INTERMEDIATE SHAFT	1	41950000	1602195
8	STRAW GUIDE	1	41956000	☎
9	COUNTERSHAFT DRIVE	1	41995600	1624215
9	STRAW GUIDE	1	41950000	1602195
10	ECCENTRIC SHAFT DRIVE	1	41952200	0102148
10	HYDRAULIC PUMP DRIVE	1	41997200	0137218
11	RETURN AUGER DRIVE	1	41989900	0105410
11	COUNTER DRIVE	1	41999700	0137516
11	COUNTER DRIVE STRAW CHOPPER	1	41999600	0119407
12	STRAW CUTTER	1	41999800	0337404
13	STRAW CHOPPER DRIVE	1	41940900	1401306
13	STRAW GUIDE - DISCHARGE AUGER	1	41995100	1527171
14	MAIN FAN	1	41957600	1402217
14	THRESHING DRUM VARIATOR DRIVE	1	41957800	1602254
15	MAIN FAN	1	41950100	0302197
15	COUNTERSHAFT DRIVE	1	41995200	1514182
16	MAIN FAN VARIABLE SPEED DRIVE	1	41950200	2602244
16	DISCHARGE AUGER SHAFT	1	41994900	0113250
17	MAIN FAN	1	41950300	0102257
18	AUGER GRAIN - ECCENTRIC SHAFT	1	41983100	1102171

D 2500

			OE	
1	FEEDER AUGER	1	41983500	0102184
2	KNIFE DRIVE	1	41964300	1401122
3	COUNTERSHAFT DRIVE	1	41955400	0202275
4	FEEDER SHAFT (UPPER)	1	41994000	0203294
5	ECCENTRIC SHAFT DRIVE	1	41982200	0402155
6	STRAW SHAKER - RETURN AUGER	1	41989900	0105410
7	INTERMEDIATE SHAFT	1	41950000	1602195
8	STRAW GUIDE	1	41956000	☎
9	COUNTERSHAFT DRIVE	1	41995600	1624215
10	HYDRAULIC PUMP DRIVE	1	41997200	0137218
11	COUNTER DRIVE STRAW CHOPPER	1	41999700	0137516
12	STRAW CUTTER	1	41999800	0337404
13	STRAW GUIDE - DISCHARGE AUGER	1	41995100	1527171
14	THRESHING DRUM VARIATOR DRIVE	1	41957800	1602254
15	COUNTERSHAFT DRIVE	1	41995200	1514182
16	MAIN FAN VARIABLE SPEED DRIVE	1	41950200	2602244
17	MAIN FAN	1	41950300	0102257
18	AUGER GRAIN - ECCENTRIC SHAFT	1	41983100	1102171
19	OIL PUMP DRIVE	1	41996700	1118081

D 2600

			OE	
1	FEEDER AUGER	1	41983500	0102184
2	KNIFE DRIVE	1	41964300	1401122
3	COUNTERSHAFT DRIVE	1	41955400	0202275
4	FEEDER SHAFT (UPPER)	1	41994000	0203294
5	ECCENTRIC SHAFT DRIVE	1	41986900	0902157
6	RETURN AUGER DRIVE	1	/	/
7	CENTER SHAFT	1	41950000	1602195
8	STRAW GUIDE	1	41986800	2002237
9	COUNTERSHAFT DRIVE	1	/	/
10	ENGINE	1	41997200	0137218
11	COUNTER DRIVE	1	41999700	0137516
12	STRAW CHOPPER DRIVE	1	41999800	0337404
13	DISCHARGE AUGER SHAFT	1	/	/
14	THRESHING DRUM VARIATOR DRIVE	1	41957800	1602254
15	SELECTOR (SPRING LOADED)	1	41995200	1514182
16	SELECTOR FOR MAIN FAN	1	41950200	2602244
17	MAIN FAN	1	41950300	0102257
18	AUGER (GRAIN)	1	41987000	0202168
19	OIL PUMP DRIVE	1	41996700	1118081

DRONNINGBORG

D 3000 S

			OE	
1	RETURN AUGER (UPPER)	1	41926400	1601120
2	DISTRIBUTION AUGER	1	41935300	1601205
3	STRIPPER BEATER	1	/	/
4	PROPULSION PUMP DRIVE	1	/	/
5	HYDRAULIC PUMP DRIVE	1	41924900	1601103
6	STRAW CHOPPER DRIVE	1	41986500	1602382
7	FEEDER DRUM	1	41986400	1654247
7	FEEDER DRUM	1	41929500	1401144
8	COUNTERSHAFT DRIVE	1	41927000	1401125
9	FEEDER SHAFT (UPPER)	1	41983900	0702199
10	COUNTER DRIVE STRAW CHOPPER	1	41955900	2002253
11	COUNTER DRIVE	1	/	/
13	AWNER SHAFT	1	/	/
14	INTERMEDIATE SHAFT	1	41926600	0201123
15	ELEVATOR DRIVE GRAIN	1	41937600	1601218
16	DISCHARGE AUGER SHAFT	1	41983400	0102180
17	ECCENTRIC SHAFT DRIVE	1	41926300	0301118
18	MAIN FAN	1	41930300	0101151
19	ECCENTRIC SHAFT DRIVE	1	41934900	0101200
20	STRIPPER BEATER	1	41980600	1611145

D 3000 S (35994)

			OE	
1	RETURN AUGER (UPPER)	1	41964300	1401122
2	FILLING AUGER	1	/	/
3	STRIPPER BEATER	1	/	/
4	PROPULSION PUMP DRIVE	1	/	/
5	HYDRAULIC PUMP DRIVE	1	41924900	1601103
6	STRAW CHOPPER DRIVE	1	41986500	1602382
7	FEEDER DRUM	1	41986400	1654247
7	FEEDER DRUM	1	41929500	1401144
8	COUNTERSHAFT DRIVE	1	41992700	1630327
9	FEEDER SHAFT (UPPER)	1	41983900	0702199
10	COUNTER DRIVE	1	41955900	2002253
11	ECCENTRIC SHAFT DRIVE	1	/	/
13	AWNER SHAFT	1	/	/
14	INTERMEDIATE SHAFT	1	41926600	0201123
15	ELEVATOR DRIVE GRAIN	1	41937600	1601218
16	DISCHARGE AUGER SHAFT	1	41984300	1430265
17	ECCENTRIC SHAFT DRIVE	1	41926300	0301118
18	MAIN FAN	1	41930300	0101151
19	MAIN FAN SELECTOR	1	41934900	0101200
20	DISCHARGE AUGER SHAFT	1	41980300	1611145
20	STRIPPER BEATER	1	41980600	1611145

D 3000 S (F36006)

			OE	
1	RETURN AUGER (UPPER)	1	41964300	1401122
2	STRIPPER BEATER	1	/	/
3	ENGINE	1	/	/
4	PROPULSION SELECTOR	1	41980100	1613266
5	HYDRAULIC PUMP DRIVE	1	41924900	1601103
6	STRAW CHOPPER DRIVE	1	41986500	1602382
7	FEEDER DRUM	1	41986400	1654247
7	FEEDER DRUM	1	41929500	1401144
8	COUNTERSHAFT DRIVE	1	41992700	1630327
9	FEEDER SHAFT (UPPER)	1	41983900	0702199
10	GEAR BOX	1	/	/
11	COUNTER DRIVE	1	41955900	2002253
12	ECCENTRIC SHAFT DRIVE	1	/	/
13	ELEVATOR DRIVE GRAIN	1	/	/
14	INTERMEDIATE SHAFT	1	41926600	0201123
15	STRIPPER BEATER	1	41937600	1601218
16	DISCHARGE AUGER SHAFT	1	41984300	1430265
17	ECCENTRIC SHAFT DRIVE	1	41926300	0301118
18	MAIN FAN	1	41930300	0101151
19	MAIN FAN SELECTOR	1	41934900	0101200
20	THRESHING DRUM VARIATOR DRIVE	1	41980000	0111152

D 3000 S (T36005)

			OE	
1	RETURN AUGER (UPPER)	1	41926400	1601120
2	DISTRIBUTION AUGER	1	41935300	1601205
3	STRIPPER BEATER	1	/	/
4	PROPULSION SELECTOR	1	41980100	1613266
5	HYDRAULIC PUMP DRIVE	1	41924900	1601103
6	STRAW CHOPPER DRIVE	1	41986500	1602382
7	FEEDER DRUM	1	41986400	1654247
7	FEEDER DRUM	1	41929500	1401144
8	COUNTERSHAFT DRIVE	1	41992700	1630327
9	FEEDER SHAFT (UPPER)	1	41983900	0702199
10	GEAR BOX	1	/	/
11	COUNTER DRIVE STRAW CHOPPER	1	41955900	2002253
12	STRAW SHAKER	1	/	/
13	GRAIN ELEVATOR	1	/	/
14	INTERMEDIATE SHAFT	1	41926600	0201123
15	STRIPPER BEATER	1	41937600	1601218
16	DISCHARGE AUGER SHAFT	1	41984300	1430265
17	ECCENTRIC SHAFT DRIVE	1	41926300	0301118
18	MAIN FAN	1	41930300	0101151
19	MAIN FAN SELECTOR	1	41934900	0101200
20	THRESHING DRUM VARIATOR DRIVE	1	41980000	0111152

D 4000 - D 4000 S (F35057 - T35832)

			OE	
1	STRIPPER BEATER	1	41926400	1601120
2	FILLING AUGER	1	41935300	1601205
3	STRIPPER BEATER	1	41992200	1623311 EE-TECH
4	HYDRAULIC PUMP DRIVE	1	41924900	1601103
5	PROPULSION PUMP DRIVE	1	41992100	1623297 EE-TECH
6	STRAW CHOPPER DRIVE	1	41958500	0202528
7	FEEDER DRUM	1	41929500	1401144
9	COUNTERSHAFT DRIVE	1	41992700	1630327
10	FEEDER SHAFT (UPPER)	1	41983900	0702199
11	COUNTER DRIVE STRAW CHOPPER	1	41955900	2002253
12	STRAW WALKER - ECCENTRIC	1	41972800	0104248
13	AWNER SHAFT - FAN SHAFT	1	41978500	0104430
14	INTERMEDIATE SHAFT	1	41926600	0201123
15	ELEVATOR DRIVE GRAIN	1	41937600	1601218
16	DISCHARGE AUGER SHAFT	1	41984300	1430265
17	MAIN FAN SELECTOR	1	41926300	0301118
18	MAIN FAN	1	41930300	0101151
19	ECCENTRIC SHAFT DRIVE	1	41934900	0101200
20	THRESHING DRUM VARIATOR DRIVE	1	41980300	1611145

D 4000 - D 4000 S (F35833)

			OE	
1	STRIPPER BEATER	1	41964300	1401122
2	FILLING AUGER	1	41972200	0104237
2	FILLING AUGER	1	41972300	0104237
3	STRIPPER BEATER	1	41992200	1623311 EE-TECH
4	HYDRAULIC PUMP DRIVE	1	41924900	1601103
5	PROPULSION PUMP DRIVE	1	41992100	1623297 EE-TECH
6	STRAW CHOPPER DRIVE	1	41958500	0202528
7	FEEDER DRUM	1	41929500	1401144
9	COUNTERSHAFT DRIVE	1	41992700	1630327
10	FEEDER SHAFT (UPPER)	1	41983900	0702199
11	COUNTER DRIVE STRAW CHOPPER	1	41955900	2002253
12	STRAW WALKER - ECCENTRIC	1	41972800	0104248
13	AWNER SHAFT - FAN SHAFT	1	41978500	0104430
14	INTERMEDIATE SHAFT	1	41926600	0201123
15	ELEVATOR DRIVE GRAIN	1	41937600	1601218
16	DISCHARGE AUGER SHAFT	1	41984300	1430265
17	MAIN FAN SELECTOR	1	41926300	0301118
18	MAIN FAN	1	41930300	0101151
19	ECCENTRIC SHAFT DRIVE	1	41934900	0101200
20	THRESHING DRUM VARIATOR DRIVE	1	41980300	1611145

D 4000 - D 4000 S (T35056)

			OE	
1	STRIPPER BEATER	1	41926400	1601120
2	FILLING AUGER	1	41935300	1601205
3	STRIPPER BEATER	1	41992200	1623311 EE-TECH
4	HYDRAULIC PUMP DRIVE	1	41924900	1601103
5	PROPULSION PUMP DRIVE	1	41992100	1623297 EE-TECH
6	STRAW CHOPPER DRIVE	1	41958500	0202528
7	FEEDER DRUM	1	41953700	2002167
8	COUNTERSHAFT DRIVE	1	41964400	1401129
9	COUNTERSHAFT DRIVE	1	41992400	1630354
10	FEEDER SHAFT (UPPER)	1	41983900	0702199
11	COUNTER DRIVE STRAW CHOPPER	1	41955900	2002253
12	STRAW WALKER - ECCENTRIC	1	41972800	0104248
13	AWNER SHAFT - FAN SHAFT	1	41958500	0202528
14	INTERMEDIATE SHAFT	1	41926600	0201123
15	ELEVATOR DRIVE GRAIN	1	41937600	1601218
16	DISCHARGE AUGER SHAFT	1	41984300	1430265
17	MAIN FAN SELECTOR	1	41926300	0301118
17	MAIN FAN SELECTOR	1	41928800	2101138
18	MAIN FAN	1	41928800	2101138
18	MAIN FAN	1	41930300	0101151
19	ECCENTRIC SHAFT DRIVE	1	41934900	0101200
19	ECCENTRIC SHAFT DRIVE	1	41966500	0101200
20	THRESHING DRUM VARIATOR DRIVE	1	41980200	0810190

D 4500

			OE	
1	RETURN AUGER (UPPER)	1	41964300	1401122
2	FILLING AUGER	1	41972100	0104232
3	STRIPPER BEATER	1	41991600	0724321 EE-TECH
4	HYDRAULIC PUMP DRIVE	1	41991400	1523177
5	STRAW CHOPPER DRIVE	1	41958500	0202528
6	FEEDER DRUM	1	41929500	1401144
7	COUNTERSHAFT DRIVE	1	41989100	1630347
8	FEEDER SHAFT (UPPER)	1	41988900	0130272
9	COUNTER DRIVE STRAW CHOPPER	1	41955900	2002253
10	STRAW SHAKER - ECCENTRIC SHAFT	1	41972800	0104248
13	FAN SHAFT AWNER SHAFT	1	41978500	0104430
14	INTERMEDIATE SHAFT	1	41912300	0200204
15	INTERMEDIATE SHAFT	1	41927800	2001129
16	ELEVATOR DRIVE GRAIN	1	41935700	0301211
17	DISCHARGE AUGER SHAFT	1	41988700	1630274
18	MAIN FAN SELECTOR	1	41926300	0301118
19	MAIN FAN	1	41930300	0101151
20	ECCENTRIC SHAFT DRIVE	1	41935500	1401209
21	THRESHING DRUM VARIATOR DRIVE	1	41980800	1613159

D 7000 - D 7000 S

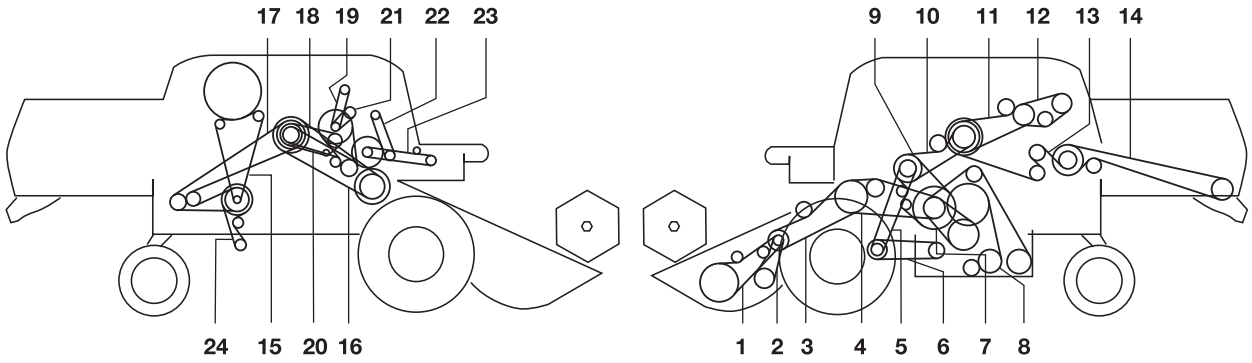

			OE	
1	FEEDER DRUM	1	41983500	0102184
2	CRANKSHAFT	1	41964300	1401122
3	COUNTERSHAFT DRIVE	1	41993000	0110288
4	FEEDER SHAFT (UPPER)	1	41993100	0203245
5		1	41950600	1902206
6		1	41950900	0102174
7	ECCENTRIC SHAFT DRIVE	1	41982400	0402159
8	STRAW SHAKER CRANK - GRAIN AUGER	1	41990100	0105408
9	INTERMEDIATE SHAFT	1	41987200	2602194
10	STRIPPER BEATER	1	41935200	1601205
11	COUNTERSHAFT DRIVE	1	41993400	0324237
12	HYDRAULIC PUMP DRIVE	1	41928900	0301141
12	HYDRAULIC PUMP DRIVE	1	41929000	2001143
12	HYDRAULIC PUMP DRIVE	1	41929200	2001146
12	HYDRAULIC PUMP DRIVE	1	41930200	1101149
13	COUNTER DRIVE STRAW CHOPPER	1	41942100	1601349
14	STRAW CHOPPER DRIVE	1	41987300	1602396
15	AWNER SHAFT	1	41912400	0200204
16	THRESHING DRUM VARIATOR DRIVE	1	41980400	1613281
16	THRESHING DRUM VARIATOR DRIVE	1	41999200	0113286
17	FAN SHAFT AWNER SHAFT	1	41990200	0105447
18	DISCHARGE AUGER SHAFT	1	41935900	1601218
18	DISCHARGE AUGER SHAFT	2	41936200	1401220
20	STRIPPER BEATER	1	41982400	0402159
24	SEED GRINDER	1	41929100	1401145
25	MAIN FAN SELECTOR - MAIN FAN	1	41982200	0402155
26	COUNTER DRIVE RADIATOR	1	41905300	1600100
27	COUNTER DRIVE RADIATOR	1	41911000	1600168

D 7200

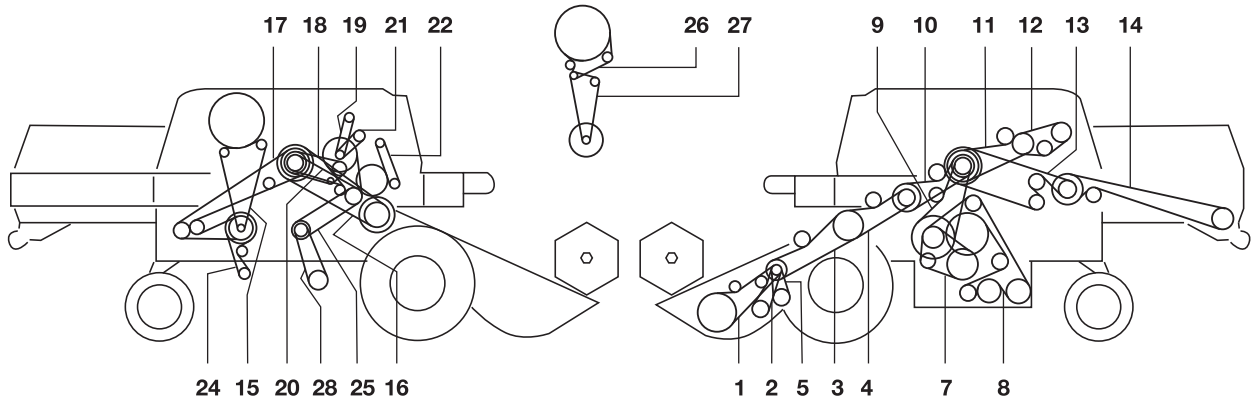

			OE	
1	FEEDER DRUM	1	41983500	0102184
1	FEEDER DRUM	1	41983500	0102184
1	FEEDER DRUM	1	41983600	0102184
2	CRANKSHAFT	1	41964300	1401122
2	CRANKSHAFT	1	41963900	1401122
3	COUNTERSHAFT DRIVE	1	41989400	1630330
3	COUNTERSHAFT DRIVE	1	41989200	0130326
4	FEEDER SHAFT (UPPER)	1	41991700	1424250 EE-TECH
7	ECCENTRIC SHAFT DRIVE	1	41982500	0402159
7	ECCENTRIC SHAFT DRIVE	1	41982400	0402159
8	STRAW SHAKER CRANK - GRAIN AUGER	1	41990100	0105408
8	STRAW SHAKER CRANK - GRAIN AUGER	1	41990200	0105447
8	STRAW SHAKER CRANK	1	41990300	0105408
8	STRAW SHAKER CRANK	1	41990400	0105447
9	INTERMEDIATE SHAFT	1	41987800	2002190
9	INTERMEDIATE SHAFT	1	41988000	0302248
10	STRIPPER BEATER	3	41934800	0301198
11	COUNTER SELECTOR	1	41993400	0324237
12	HYDRAULIC PUMP DRIVE	1	41929000	2001143
12	HYDRAULIC PUMP DRIVE	1	41930200	1101149
13	COUNTER DRIVE STRAW CHOPPER	1	41942100	1601349
14	STRAW CHOPPER DRIVE	1	41987300	1602396
15	AWNER SHAFT	1	41912300	0200204
15	AWNER SHAFT	1	41912400	0200204
16	THRESHING DRUM VARIATOR DRIVE	1	41980400	1613281
17	FAN SHAFT AWNER SHAFT	1	41990200	0105447
17	FAN SHAFT AWNER SHAFT	1	41990400	0105447
18	DISCHARGE AUGER SHAFT	2	41936200	1401220
20	STRIPPER BEATER	1	41982500	0402159
24	SEED GRINDER	1	41929100	1401145
25	MAIN FAN SELECTOR	1	41987900	0702151
26	COUNTER DRIVE RADIATOR	1	41905300	1600100
27	COUNTER DRIVE RADIATOR	1	41911000	1600168
28	MAIN FAN	1	41982200	0402155
28	MAIN FAN	1	41987900	0702151
28	MAIN FAN	1	41982100	0402155

D 7500

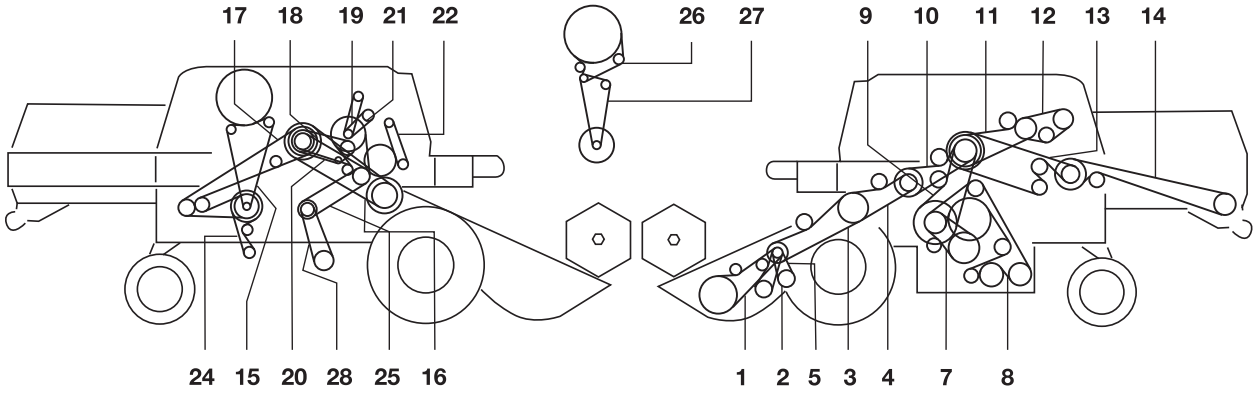

			OE	
1	FEEDER DRUM	1	41983500	0102184
1	FEEDER DRUM	1	41983500	0102184
1	FEEDER DRUM	1	41983600	0102184
2	CRANKSHAFT	1	41964300	1401122
2	CRANKSHAFT	1	41963900	1401122
3	COUNTERSHAFT DRIVE	1	41989400	1630330
3	COUNTERSHAFT DRIVE	1	41989200	0130326
4	FEEDER SHAFT (UPPER)	1	41991700	1424250 EE-TECH
7	ECCENTRIC SHAFT DRIVE	1	41982500	0402159
7	ECCENTRIC SHAFT DRIVE	1	41982400	0402159
8	STRAW SHAKER CRANK - GRAIN AUGER	1	41990100	0105408
8	STRAW SHAKER CRANK - GRAIN AUGER	1	41990200	0105447
8	AUGER - RETURN AUGER GRAIN (LOWER)	1	41990300	0105408
8	STRAW SHAKER CRANK - GRAIN AUGER	1	41990400	0105447
9	INTERMEDIATE SHAFT	1	41987800	2002190
9	INTERMEDIATE SHAFT	1	41988000	0302248
10	STRIPPER BEATER	3	41934800	0301198
11	COUNTERSHAFT DRIVE	1	41993400	0324237
12	ENGINE - HYDRAULIC PUMP	1	41929000	2001143
12	HYDRAULIC PUMP DRIVE	1	41930200	1101149
13	COUNTER DRIVE STRAW CHOPPER	1	41942100	1601349
14	STRAW CHOPPER DRIVE	1	41987300	1602396
15	AWNER SHAFT	1	41912300	0200204
15	AWNER SHAFT	1	41912400	0200204
16	THRESHING DRUM VARIATOR DRIVE	1	41980900	1613281
17	FAN SHAFT AWNER SHAFT	1	41990200	0105447
17	FAN SHAFT AWNER SHAFT	1	41990400	0105447
18	DISCHARGE AUGER SHAFT	2	41936200	1401220
20	STRIPPER BEATER	1	41982500	0402159
24	SEED GRINDER	1	41929100	1401145
25	MAIN FAN SELECTOR	1	41987900	0702151
26	COUNTER DRIVE RADIATOR	1	41905300	1600100
27	COUNTER DRIVE RADIATOR	1	41911000	1600168
28	MAIN FAN	1	41982200	0402155
28	MAIN FAN	1	41987900	0702151
28	MAIN FAN SELECTOR - MAIN FAN	1	41982100	0402155

D 8000 - D 8000 S

			OE	
1	FEEDER DRUM	1	41983500	0102184
1	FEEDER DRUM	1	41983500	0102184
1	FEEDER DRUM	1	41983600	0102184
2	CRANKSHAFT	1	41964300	1401122
2	CRANKSHAFT	1	41964100	1601120
3	COUNTERSHAFT DRIVE	1	41993000	0110288
4	FEEDER SHAFT (UPPER)	1	41993100	0203245
5		1	41950600	1902206
6		1	41950900	0102174
7	ECCENTRIC SHAFT DRIVE	1	41982400	0402159
8	STRAW SHAKER CRANK - GRAIN AUGER	1	41990100	0105408
9	INTERMEDIATE SHAFT	1	41987200	2602194
10	STRIPPER BEATER	1	41935200	1601205
11	COUNTER SELECTOR	1	41993400	0324237
12	HYDRAULIC PUMP DRIVE	1	41929000	2001143
12	HYDRAULIC PUMP DRIVE	1	41930200	1101149
12	HYDRAULIC PUMP DRIVE	1	41930300	0101151
13	COUNTER DRIVE STRAW CHOPPER	1	41942100	1601349
14	STRAW CHOPPER DRIVE	1	41987600	1402501
15	AWNER SHAFT	1	41912400	0200204
16	THRESHING DRUM VARIATOR DRIVE	1	41980400	1613281
16	THRESHING DRUM VARIATOR DRIVE	1	41999200	0113286
17	FAN SHAFT AWNER SHAFT	1	41990200	0105447
18	DISCHARGE AUGER SHAFT	1	41935900	1601218
18	DISCHARGE AUGER SHAFT	2	41936200	1401220
20	STRIPPER BEATER	1	41982400	0402159
24	SEED GRINDER	1	41929100	1401145
25	MAIN FAN SELECTOR	1	41982200	0402155
26	COUNTER DRIVE RADIATOR	1	41905300	1600100
27	COUNTER DRIVE RADIATOR	1	41911000	1600168

D 8400 - D 8700

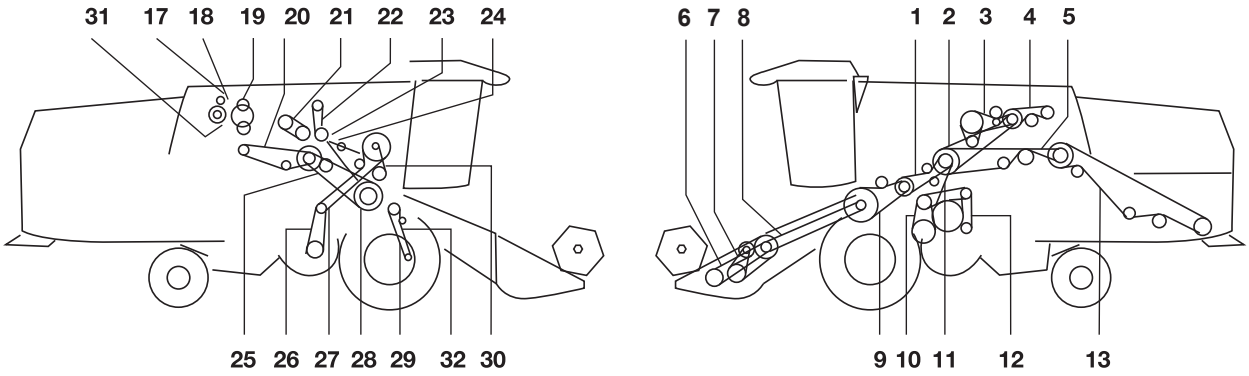

			OE	
1	STRIPPER BEATER	3	41934800	0301198
2	COUNTERSHAFT DRIVE	1	41990051	1524314 EE-TECH
3	DISCHARGE AUGER SHAFT	1	41990050	0123224
4	DIESEL ENGINE	3	41934000	0201161
5	INTERMEDIATE SHAFT - STRAW CHOPPER	1	41942200	1401378
6	KNIFE DRIVE	1	41985600	0202245
9	FEEDER SHAFT (UPPER)	1	41991700	1424250 EE-TECH
10	ECCENTRIC SHAFT DRIVE	1	41982100	0402155
11	INTERMEDIATE SHAFT	1	41984100	0102216
12	STRAW SHAKER CRANK	1	41990068	0105236
13	STRAW CHOPPER DRIVE	1	41978400	0223526
17	AIR CONDITIONING COMPRESSOR DRIVE	1	41909000	1699317
17	AIR CONDITIONING COMPRESSOR DRIVE	1	41991000	1472238
18	SUCTION STRAINER - AIR CONDITIONING	1	41991200	0372240
19	SUCTION STRAINER	1	41990009	0372271
20	DUST EXTRACTOR	1	41936700	1401216
21	DISCHARGE AUGER SHAFT	1	41979600	1623354
23	INTERMEDIATE SHAFT - FILL ELEVATOR	1	41950100	0302197
25	COUNTERSHAFT - GRAIN SEPARATOR	1	41982100	0402155
26	MAIN FAN	1	41982100	0402155
27	MAIN FAN VARIABLE SPEED DRIVE	1	41987900	0702151
28	THRESHING DRUM VARIATOR DRIVE	1	41980900	1613281
29	DISCHARGE AUGER SHAFT	1	41950400	2602194
31	SUCTION STRAINER - AIR CONDITIONING	1	41990008	0272247

D 8500

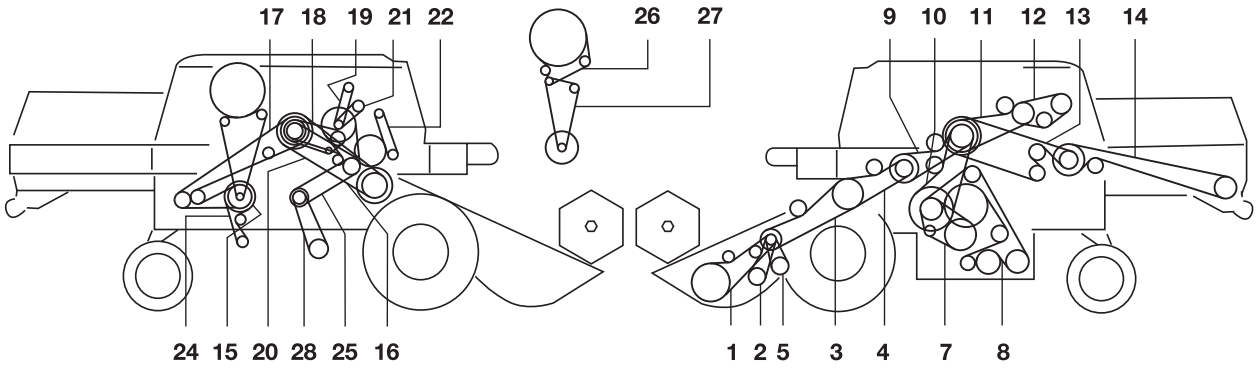

			OE	
1	FEEDER DRUM	1	41983500	0102184
1	FEEDER DRUM	1	41983600	0102184
2	CRANKSHAFT	1	41964300	1401122
2	CRANKSHAFT	1	41963900	1401122
3	COUNTERSHAFT DRIVE	1	41989400	1630330
3	COUNTERSHAFT DRIVE	1	41989200	0130326
4	FEEDER SHAFT (UPPER)	1	41991700	1424250 EE-TECH
7	ECCENTRIC SHAFT DRIVE	1	41982500	0402159
7	ECCENTRIC SHAFT DRIVE	1	41982400	0402159
8	STRAW SHAKER CRANK	1	41990069	0105447
8	STRAW SHAKER CRANK - GRAIN AUGER	1	41990100	0105408
8	STRAW SHAKER CRANK	1	41990300	0105408
8	STRAW SHAKER CRANK	1	41990400	0105447
9	INTERMEDIATE SHAFT	1	41987800	2002190
9	INTERMEDIATE SHAFT	1	41988000	0302248
10	STRIPPER BEATER	3	41934800	0301198
11	COUNTER SELECTOR	1	41991300	0324237
11	COUNTER SELECTOR	1	41993400	0324237
12	HYDRAULIC PUMP DRIVE	1	41930200	1101149
13	COUNTER DRIVE STRAW CHOPPER	1	41942100	1601349
14	STRAW CHOPPER DRIVE	1	41987300	1602396
15	AWNER SHAFT	1	41912300	0200204
15	AWNER SHAFT	1	41912400	0200204
16	THRESHING DRUM VARIATOR DRIVE	1	41980400	1613281
17	FAN SHAFT AWNER SHAFT	1	41990069	0105447
17	FAN SHAFT AWNER SHAFT	1	41990200	0105447
18	DISCHARGE AUGER SHAFT	2	41936200	1401220
20	STRIPPER BEATER	1	41982400	0402159
24	SEED GRINDER	1	41929100	1401145
25	MAIN FAN SELECTOR	1	41987900	0702151
26	COUNTER DRIVE RADIATOR	1	41905300	1600100
27	COUNTER DRIVE RADIATOR	1	41911000	1600168
28	MAIN FAN SELECTOR - MAIN FAN	1	41982200	0402155
28	MAIN FAN SELECTOR - MAIN FAN	1	41987900	0702151
28	MAIN FAN SELECTOR - MAIN FAN	1	41982100	0402155

D 8900

			OE	
1		2	41933700	0101187
2		1	41979400	1626276 EE-TECH
3		1	41979100	0123239
4		1	41934600	1624201
5		1	41979600	1623354
6		1	41978900	0323544
7		1	41983500	0102184
7		1	41983600	0102184
8		1	41963900	1401122
11		1	41979800	1625309 EE-TECH
12		1	41990001	0119198
13		2	41933700	0101187
14		1	41979000	2023280 EE-TECH
17		1	41911000	1600168
18		1	41991200	0372240
19		1	41986100	0202230
20		1	41998800	0101164
22		2	41937500	2901237
23		1	41978800	0123398
27		1	41981200	0810190
28		1	41981100	0810228
29		1	41981000	0215198
30		1	41985200	0102176
31		1	41985300	2002190

D 9000

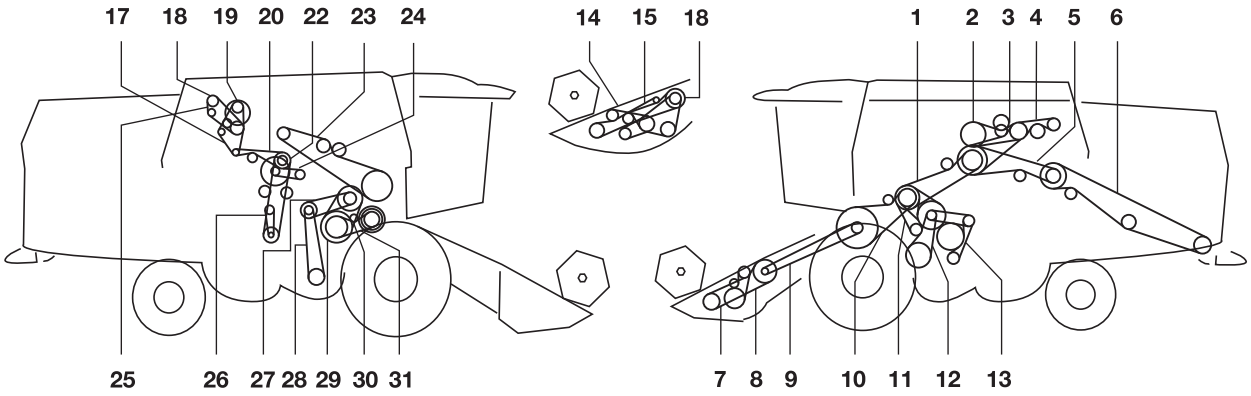

			OE	
1	COUNTERSHAFT DRIVE	1	41979900	0226330 EE-TECH
2	DISCHARGE AUGER SHAFT	1	41979400	1626276 EE-TECH
3	DIESEL ENGINE	1	41979100	0123239
4	TRACTION PUMP	1	41934200	1625207
5	INTERMEDIATE SHAFT - STRAW CHOPPER	1	41979600	1623354
6	STRAW CHOPPER DRIVE	1	41978900	0323544
7	KNIFE DRIVE	1	41986200	0202245
7	KNIFE DRIVE	1	41985600	0202245
10	FEEDER SHAFT (UPPER)	1	41979800	1625309 EE-TECH
11	STRIPPER BEATER	1	41990001	0119198
12	ECCENTRIC SHAFT - INTERMEDIATE SHAFT	2	41933700	0101187
13	STRAW SHAKER CRANK	1	41979000	2023280 EE-TECH
14	KNIFE DRIVE	1	41986300	1402307
17	DIESEL ENGINE	1	41911000	1600168
18	COMPRESSOR DRIVE	1	41991200	0372240
19	INTERMEDIATE SHAFT - FILL ELEVATOR	1	41986100	0202230
20	DUST EXTRACTOR - COUNTERSHAFT	1	41998800	0101164
22	COUNTERSHAFT DRIVE	2	41937500	2901237
23	DISCHARGE AUGER SHAFT	1	41978800	0123398
23	DISCHARGE AUGER SHAFT	1	41979200	1524401 EE-TECH
25	AIR CONDITIONING COMPRESSOR DRIVE	1	41909000	1699317
27	MAIN FAN RADIATOR	1	41981200	0810190
28	MAIN FAN	1	41981100	0810228
29	INTERMEDIATE SHAFT - VARIATOR DRIVE	1	41981000	0215198
30	INTERMEDIATE SHAFT - VARIATOR DRIVE	1	41985200	0102176
31	THRESHING DRUM VARIATOR DRIVE	1	41985300	2002190

EPPLE MOBIL

211 - 220 - 250

			OE	
1	HULLER DRIVE	1	/	2329210
2	CROSS BEATER	1	/	2354227
3	AUGER DRIVE	1	/	2354234
4	CROSS BEATER	1	/	2354234
5	CROSS BEATER	1	/	2354241
6	BLADE DRIVE	1	/	2354293
7	AUGER DRIVE	1	/	2354293
8	FEEDER DRIVE	1	/	2354293
9	REEL DRIVE	1	/	2354342
10	VENTILATOR	1	/	2354342
11	COMPRESSOR DRIVE	1	/	2330562
12	COMPRESSOR DRIVE	1	/	2330592
13	COMPRESSOR DRIVE	1	/	2330696
14	RETURN ELEVATOR DRIVE	1	/	0201090
15	MAIN ELEVATOR	1	/	0101105
16	REEL DRIVE	1	/	2301174
17	HULLER DRIVE	1	/	2301174
18	STRAW SHAKER	1	/	0201191
19	HULLER DRIVE	1	/	1401216
20	VARIATOR DRIVE	1	/	1403222
21	TRANSPORT BOX	1	/	2383230
22	HYDRAULIC PUMP DRIVE	1	/	2383254
23	VARIATOR DRIVE	1	/	/
24	VARIATOR DRIVE	1	/	/
25	BEATER DRIVE	1	/	/

840

			OE	
1	REEL DRIVE	1	20X3150	2354342
2	KNIFE DRIVE	1	20X2500	2354293
3	FEEDER AUGER	1	22X1700	0302134
4	TABLE DRIVE	1	20X2500	2354293
5	TRACTION VARIATOR DRIVE	1	60X18X1400	0366248
6	TRACTION DRIVE	1	32X2800	1403222
7	REEL DRIVE COUNTERSHAFT	1	17X2240	2301174
8	HYDRAULIC PUMP DRIVE	1	9.5X1275	0173232
9	MAIN DRIVE	1	80X3370	0439324
10	UNLOADING DRIVE	1	19X1975	2329208
11	DRIVE GRAIN TANK	1	17X1320	0101105
12	FILLING DRIVE	1	12.5X2150	2317192
13	BALER	1	25X8600	2330695
14	STRAW WALKER DRIVE	1	17X2400	1601185
15	TAILINGS AUGER DRIVE (GRAIN)	1	20X1000	2354182
16	AUGER COUNTERSHAFT	1	17X1320	0101105
17	FAN DRIVE	1	20X3150	2354342
19	RADIATOR FAN DRIVE	1	19X2770	2329267
20	RADIATOR FAN DRIVE	1	12.5X1175	0372223

940

			OE	
1	REEL DRIVE	1	20X4000	1454407
2	REEL DRIVE VARIABLE SPEED	1	38X17X1493	2311132
3	KNIFE DRIVE	1	22X2000	0902157
4	TABLE DRIVE	1	22X3330	1602254
5	FAN DRIVE	1	22X3740	0202285
6	ELEVATOR DRIVE UNIT	1	CCX5000	2305381
7	STRAW WALKER DRIVE	2	22X3330	1602254
8	MAIN DRIVE	1	110X3855	2339360
9	HYDRAULIC PUMP DRIVE	2	12.5X1350	1472236
10	RADIATOR FAN DRIVE	1	12.5X1225	1472227
12	DRIVE GRAIN TANK	2	10X850	2383223
13	DE-AWNER RETURN DRIVE	1	22X4400	0202332
14	UNLOADING DRIVE	1	22X1950	0402153
15	ELEVATOR DRIVE UNIT	1	17X1900	1401147
16	FAN DRIVE	1	BBX3500	2304268
17	ELEVATOR DRIVE (LOWER)	1	17X5000	1401378
18	STRAW WALKER DRIVE	1	22X3100	1602240
19	THRESHING DRUM VARIATOR DRIVE	1	55X25X2070	1514192
20	AUGER TAILINGS AND GRAIN	1	17X1060	0101085

1000 - 1000 S

			OE	
x	BLADE	1	/	2329321
x	BLADE DRIVE	1	/	2329359
x	HULLER 1000	1	/	2329370
x	REEL	1	/	2354342
x	FAN 1000	1	/	1900095
x	FAN 1000 S	1	/	1900095
x	HYDRAULIC PUMP 1000	1	/	0200105
x	HYDRAULIC PUMP 1000 S	1	/	0200109
x	SECONDARY CLEANING	1	/	2301262
x	TANK OUTLET	1	/	0902157
x	VENTILATION	1	/	0502165
x	STRAW SHAKER	1	/	1602240
x	FIRST CLEANING 1000 S	1	/	0202245
x	HULLER 1000 S	1	/	0302313
x	ELEVATOR	1	/	1402336
x	REEL VARIATOR	1	/	2303125
x	HULLER AUGER	1	/	2317192
x	DISTRIBUTORE SERBATOI	1	/	2337263
x	REEL	1	/	2319270
x	FIRST CLEANING 1000	1	/	2319274
x	BEATER 1000 S	1	/	/
x	BEATER 1000	1	/	/
x	BEATER VARIATOR	1	/	/

1040

			OE	
1	REEL DRIVE	1	20X4000	1454407
1	REEL DRIVE	1	20X4250	1454423
2	REEL DRIVE VARIABLE SPEED	1	38X17X1493	2311132
3	KNIFE DRIVE	1	22X2000	0902157
3	RICE	1	32X14X2000	1510174
4	TABLE DRIVE	1	22X3330	1602254
4	RICE	1	32X14X4620	2310362
5	FAN DRIVE	1	25X3750	2330335
6	ELEVATOR DRIVE UNIT	1	645515	2305402
7	STRAW ELEVATOR DRIVE	2	22X3330	1602254
8	MAIN DRIVE	1	3/HB/3830	1824328 EE-TECH
9	RADIATOR FAN DRIVE	1	12.5X1250	0172230
10	HYDRAULIC PUMP DRIVE	1	17X1450	1901115
12	DRIVE GRAIN TANK	1	17X1090	0101088
13	DE-AWNER RETURN DRIVE	1	22X5055	1402387
14	UNLOADING DRIVE	2	22X1870	0302146
15	ELEVATOR DRIVE UNIT	1	17X1850	1401144
16	FAN DRIVE	1	BBX3500	2304268
17	ELEVATOR DRIVE (LOWER)	1	17X5000	1401378
18	STRAW WALKER DRIVE	1	22X3200	0202245
19	FAN DRIVE VARIABLE SPEED	1	35X17X1844	0361260
20	THRESHING DRUM VARIATOR DRIVE	1	55X25X2070	1514192
21	TAILINGS AUGER DRIVE (GRAIN)	1	17X1150	0201092

1240

			OE	
1	REEL DRIVE	1	20X4000	1454407
1	REEL DRIVE	1	20X4250	1454423
2	REEL DRIVE VARIABLE SPEED	1	38X17X1493	2311132
3	KNIFE DRIVE	1	22X2000	0902157
3	RICE	1	32X14X2000	1510174
4	TABLE DRIVE	1	22X3330	1602254
4	RICE	1	32X14X4620	2310362
5	FAN DRIVE	1	25X3750	2330335
6	ELEVATOR DRIVE UNIT	1	HCCX5280	2305402
7	STRAW ELEVATOR DRIVE	2	22X3330	1602254
8	MAIN DRIVE	1	4/HB/1490	2325158
9	RADIATOR FAN DRIVE	1	12.5X1275	0372232
9	RADIATOR FAN (TURBO ENGINE)	1	12.5X1350	1472236
10	HYDRAULIC PUMP DRIVE	1	17X1400	0401111
12	DRIVE GRAIN TANK	1	17X1090	0101088
13	DE-AWNER RETURN DRIVE	1	22X5055	1402387
14	UNLOADING DRIVE	1	22X1870	0302146
15	ELEVATOR DRIVE UNIT	1	17X1950	0201152
16	FAN DRIVE	1	BBX3500	2304268
17	ELEVATOR DRIVE (LOWER)	1	17X4830	0301373
18	STRAW WALKER DRIVE	1	22X3200	0202245
19	FAN DRIVE VARIABLE SPEED	1	35X17X1844	0361260
20	THRESHING DRUM VARIATOR DRIVE	1	55X25X2070	1514192
21	TAILINGS AUGER DRIVE (GRAIN)	1	17X1250	1401101
22	CLEANING FAN DRIVE	1	13X2550	2300192
23	CLEANING FAN DRIVE	1	13X1090	0200085

5250

			OE	
1		1	340433422	0102183
2		1	340433253	1601120
3		1	340433197	0200219
4		1	344311240	0324211
5		1	344312128	1927295
6		1	340433984	1904193
7		1	340435152	1915192
8		1	344311318	1925345 EE-TECH
9		1	340433539	1903342
10		1	340433474	1902354
11		1	344311131	1923295 EE-TECH
12		1	344311151	1923499
13		1	344311123	1923257 EE-TECH
14		1	340435150	1910179
15		1	344311117	1423207
16		1	340433154	1472251
17		1	340433253	1601120
18		1	340434138	1960189
19		1	340433423	0102184

6300 - 6330

			OE	
1	DRUM DRIVE	1	41979900	0226330 EE-TECH
2	THRESHING DRUM VARIATOR DRIVE	1	41978000	0126299 EE-TECH
3	DISPOSAL SHAFT DRIVE	1	41978100	0723264 EE-TECH
4	THRESHER DRIVE (SECONDARY)	2	41937800	1401231
5	MOVEMENT DRIVE	1	41990057	0125211
6	CRUSHER DRIVE	1	41979600	1623354

8300

			OE	
1		1	28274029	1824172
2		1	41921801	2687277
3		1	41929000	2001143
4		2	41939300	0401279
5		2	41975300	2904308
6		1	41978800	0123398
7		1	41979600	1623354
8		1	41979800	1625309 EE-TECH
9		1	41980500	0715190
10		1	41981100	0810228
11		1	41981200	0810190
12		1	41986300	1402307
13		1	41990001	0119198
14		2	41990007	1437204
15		2	41990007	1437204
16		1	41990059	0226330 EE-TECH
17		1	41990064	0149339
18		1	685121585	1489286

E 512

			OE	
1	COUNTERSHAFT - ELEVATOR	1	/	/
2	ELEVATOR DRIVE (UPPER) SHAFT	1	/	/
3	RETURN ELEVATOR DRIVE	1	/	/
4	DISCHARGE AUGER SHAFT	1	/	/
5	FAN DRIVE	1	/	/
6	CYLINDER VARIATOR DRIVE	1	50X2315	0213197
7	FAN DRIVE VARIABLE SPEED	1	35X1228	1899278
8	MAIN DRIVE	1	50X3020	1813249
9	CUTTING TABLE DRIVE	1	/	/
10	HYDRAULIC PUMP DRIVE	1	/	/
11	MAIN DRIVE	1	/	/
12	STRAW SHAKER	1	/	/
13	FEEDER SHAFT - SIEVE BOX	1	/	/
14	SHAKER SHOE DRIVE	1	/	/

E 514

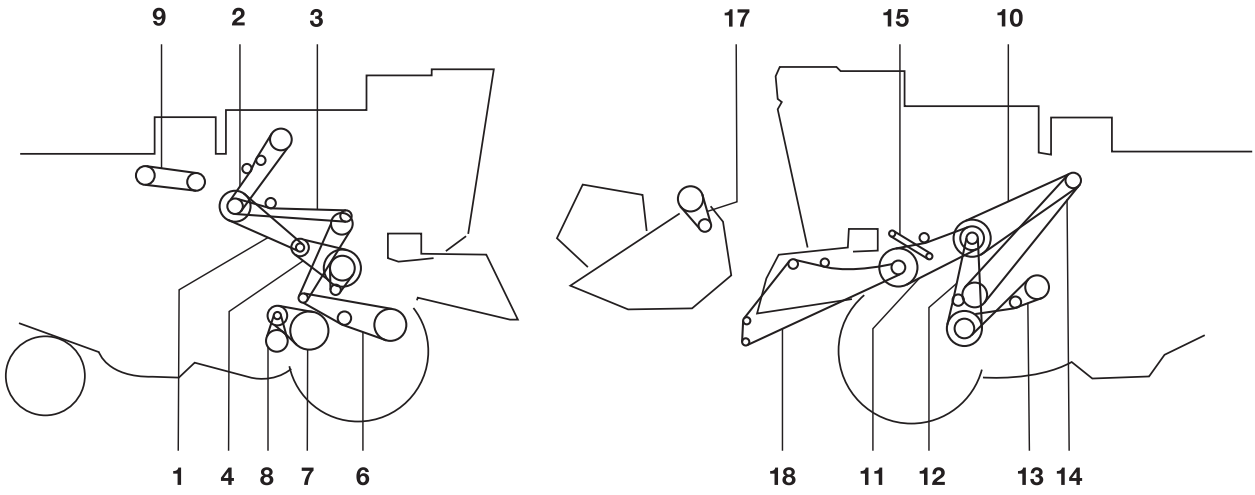

			OE	
0		1	8800456628	☎
0		1	9911860395	2602244
1		1	4254138824	1319233
2		1	4250129755	0319285
3		1	4250129747	2319270
4		1	4250121877	1413193
5		1	4250121882	1413246
6		1	4250121772	1823248
7		1	4254138857	2637200
8		1	4250121860	1899278
9		1	4254138865	0372244
10		1	4250121764	1824328 EE-TECH
11		1	4260703926	0730313
12		1	4254138832	0337304
13		1	4254138840	1437256
14		1	4250129730	1819365
15		1	9911861268	☎
16		1	4250121780	1823326 EE-TECH
17		1	4221668173	1899278

E 516 - E 516 B - E 517

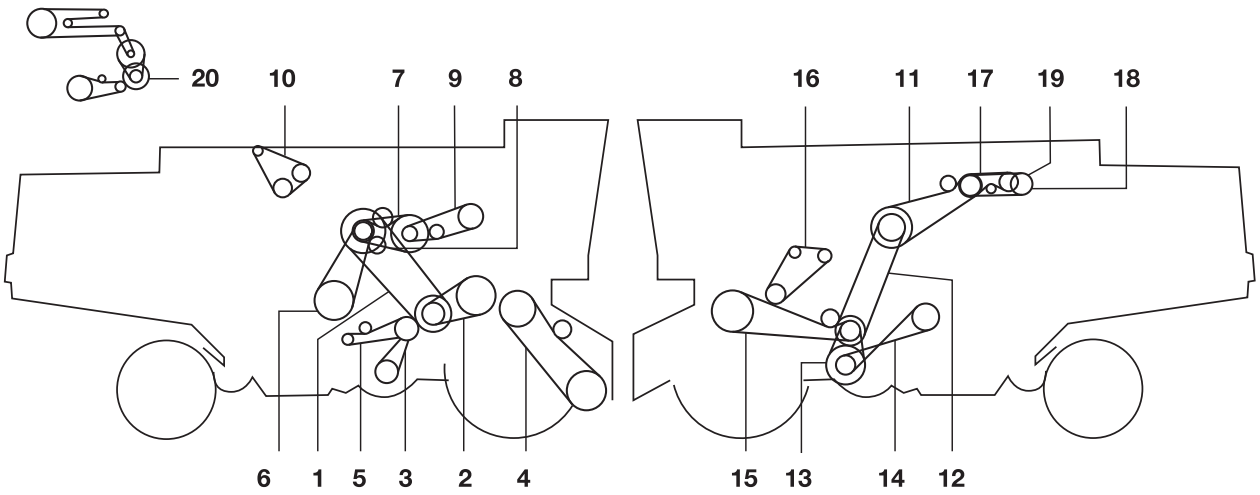

			OE	
1		1	4240023362	1813327
2		1	4240023387	1425228
3		1	4240023354	2699315
4		1	4240023395	0724347 EE-TECH
5		1	4240044287	0372284
6		1	4240044295	0337278
7		1	4240044301	0737236
8		2	4240044246	0102184
9		2	4240044270	1837245
10		1	9911861645	0372280
11		1	4240023370	1625309 EE-TECH
12		2	4240044254	1819305
13		2	4240046545	1472264
14		1	4240040388	0337304
15		1	4240023395	0724347 EE-TECH
16		1	4240044301	0737236
17		2	4240044262	1837207
18		2	4240044584	1118090
19		2	4240043405	1118090
20		1	4240043413	0337227

E 524 - E 525

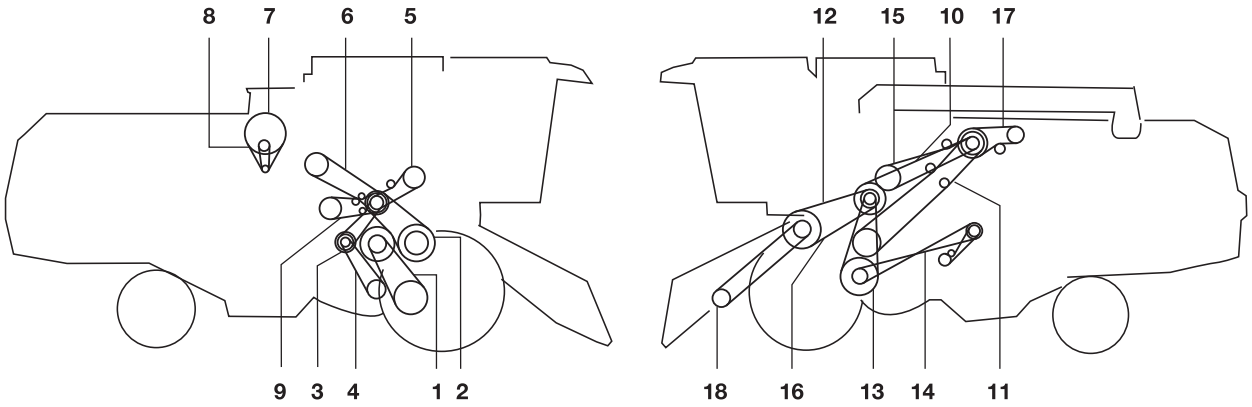

			OE	
0		1	4260700007	1837267
0		1	8811861717	☎
0		1	9911861725	2137163
0		1	9911861758	2619314
1		1	4260699993	1513207
2		1	4250121877	1413193
3		1	4240044301	0737236
4		1	4240023354	2699315
5		1	4260700015	2787313
6		1	4260700023	1319233
7		1	4260703838	1882321
8		1	4260703846	0173213
9		1	60143505	1118090
10		1	4260699985	0324377
11		1	4260699960	1824417
12		1	4260703926	0730313
13		1	4260700031	0300223
14		1	60143490	0737337
15		1	4260699977	1523306 EE-TECH
16		1	4260703942	1824294 EE-TECH
17		1	4270727737	1425204
18		1	4260715183	0724347 EE-TECH

E 527

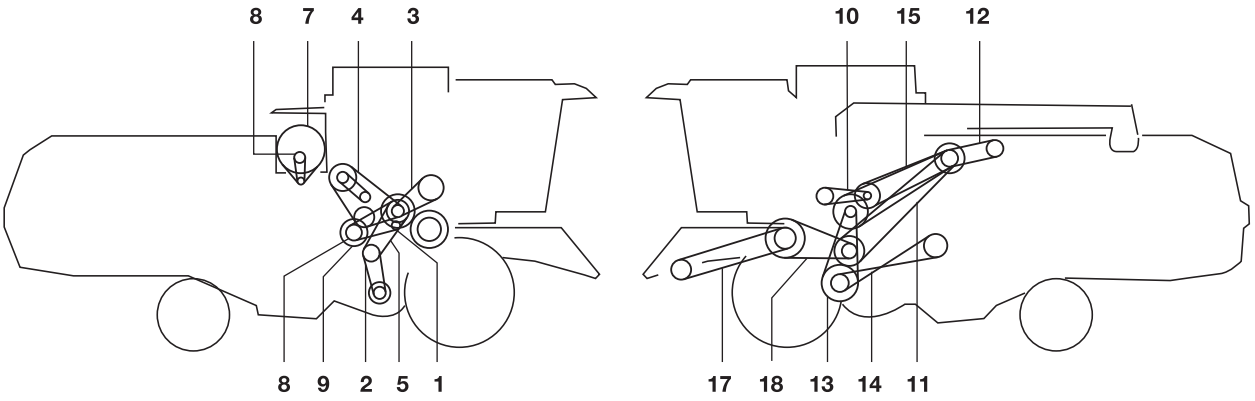

			OE	
1		1	60183586	0213198
2		1	4240023354	2699315
3		1	4260700015	2787313
4		1	4270722517	2787387
5		1	61011077	2001178
6		1	61017105	0783342
7		1	6017105	☎
8		1	61029584	0273217
9		1	61009402	1837245
10		1	61020978	2024376
11		1	60168160	0224406 EE-TECH
12		1	4270727737	1425204
13		1	4270722252	2787387
14		1	61009082	0337348
15		1	61020986	0223304
16		1	61009074	0324279 EE-TECH
17		1	61004680	0125349

A65

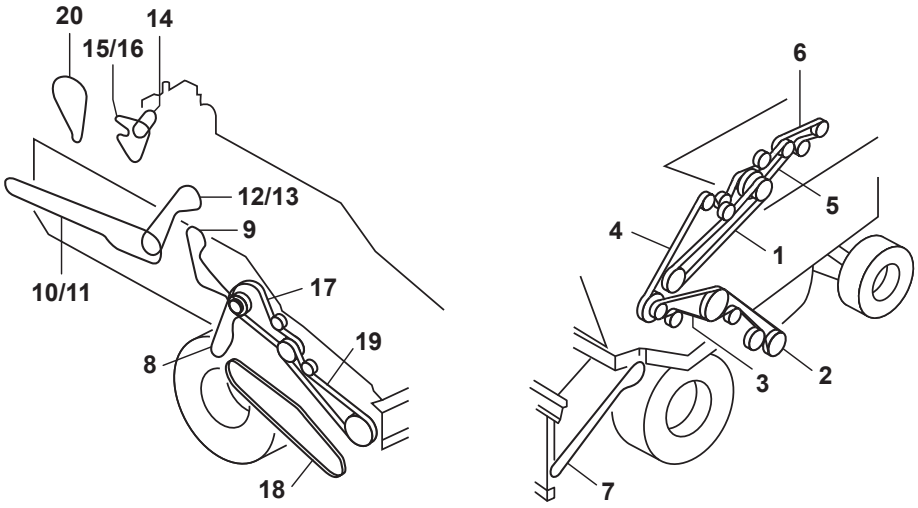

			OE	
1	UNLOADER DRIVE	1	101102M1	0123325
2	GRAIN ELEVATOR DRIVE	1	71403685	0302248
3	SHAKER SHOE PITMAN DRIVE	1	71390199	0323233 EE-TECH
4	BEATER DRIVE	1	71386352	2024376
5	MAIN COUNTERSHAFT DRIVE	1	71390188	1524314 EE-TECH
6	TANDEM PUMP DRIVE	1	71418984	0125219
7	HEADER COUNTERSHAFT TO PIVOT SHAFT	1	71398388	1402373
8	VARIABLE SPEED FAN DRIVE	1	71394352	0709234
9	RETURN ELEVATOR DRIVE	1	71385801	0304214
10	SPREADER DRIVE	1	1680230W1	1401442
11	CHOPPER SECONDARY DRIVE	1	71406339	0323448
12	SPREADER JACKSHAFT DRIVE	1	227455M1	0102250
13	CHOPPER PRIMARY DRIVE	1	71406361	1423301 EE-TECH
14	A/C COMPRESSOR DRIVE	1	71148120	0372232
15	FAN / ALTERNATOR (PRIOR TO ENG. SN T11858)	1	V685121585	1489286
16	FAN / ALTERNATOR (EFF ENG. SN T11858)	1	V685121530	0189280
17	BEATER-TO-FEEDER HOUSE JACKSHAFT	1	71398384	0127308
18	VARIABLE SPEED-TO-HEADER COUNTERSHAFT	1	71399505	0313321
19	JACKSHAFT-TO-HEADER COUNTERSHAFT	1	71399519	0144386
20	ROTARY SCREEN	1	71396754	1900132

A66

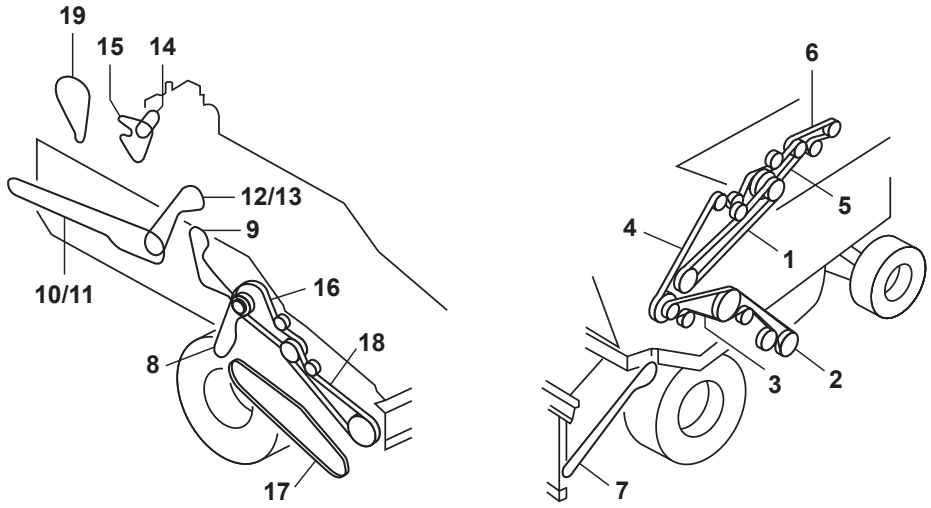

			OE	
1	BIN UNLOADER DRIVE	1	71410767	1623311 EE-TECH
2	GRAIN DRIVE	1	71410765	1923287 EE-TECH
3	SHAKER SHOE PITMAN DRIVE	1	71390199	0323233 EE-TECH
4	BEATER DRIVE	1	71388216	1425378 EE-TECH
5	MAIN COUNTERSHAFT DRIVE	1	71390188	1524314 EE-TECH
6	TANDEM PUMP DRIVE	1	71418984	0125219
7	FEEDER PIVOT SHAFT DRIVE	1	71427255	1402373
8	VARIABLE SPEED FAN DRIVE	1	71394352	0709234
9	RETURN ELEVATOR DRIVE	1	71385801	0304214
10	CHOPPER SECONDARY DRIVE	1	71406339	0323448
11	SPREADER DRIVE (SECONDARY)	1	1680230W1	1401442
12	SPREADER DRIVE (PRIMARY)	1	71414420	0202245
13	CHOPPER DRIVE (PRIMARY)	1	71406338	0123305
14	A/C COMPRESSOR DRIVE	1	71148120	0372232
15	FAN/ALTERNATOR DRIVE	1	V685121530	0189280
16	BEATER-TO-FEEDER HOUSE JACKSHAFT	1	71398384	0127308
17	VARIABLE SPEED-TO-HEADER COUNTERSHAFT	1	71399505	0313321
18	JACKSHAFT-TO-HEADER COUNTERSHAFT	1	71399519	0144386
19	ROTARY SCREEN DRIVE	1	71396754	1900132

A75

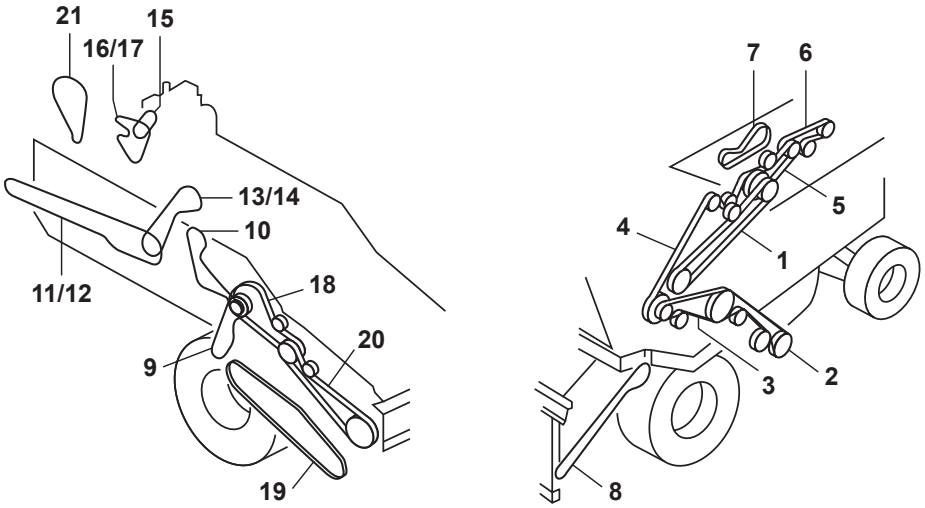

			OE	
1	UNLOADER DRIVE	1	101102M1	0123325
2	GRAIN ELEVATOR DRIVE	1	71403685	0302248
3	SHAKER SHOE PITMAN DRIVE	1	71390199	0323233 EE-TECH
4	BEATER DRIVE	1	71388216	1425378 EE-TECH
5	MAIN COUNTERSHAFT DRIVE	1	71418976	1425218
6	ROTOR PUMP DRIVE	1	71390188	1524314 EE-TECH
7	PROPEL PUMP DRIVE	1	71418978	1224221
8	HEADER COUNTERSHAFT TO PIVOT SHAFT	1	71398388	1402373
9	VARIABLE SPEED FAN DRIVE	1	71394352	0709234
10	RETURN ELEVATOR DRIVE	1	71385801	0304214
11	CHOPPER DRIVE (SECONDARY)	1	71406339	0323448
12	SPREADER DRIVE	1	1680323WI	☎
13	SPREADER JACKSHAFT DRIVE	1	71414420	0202245
14	CHOPPER DRIVE (PRIMARY) 136.5"	1	71406361	1423301 EE-TECH
15	A/C COMPRESSOR DRIVE	1	71148120	0372232
16	FAN / ALTERNATOR DRIVE (PRIOR TO ENG SN T11858)	1	V685121585	1489286
17	FAN/ALTERNATOR DRIVE (EFF. SN T11858)	1	V685121530	0189280
18	BEATER-TO-FEEDER HOUSE JACKSHAFT	1	71398384	0127308
19	VARIABLE SPEED-TO-HEADER COUNTERSHAFT	1	71399505	0313321
20	JACKSHAFT-TO-HEADER COUNTERSHAFT	1	71399519	0144386
21	ROTARY SCREEN DRIVE	1	71396754	1900132

A76

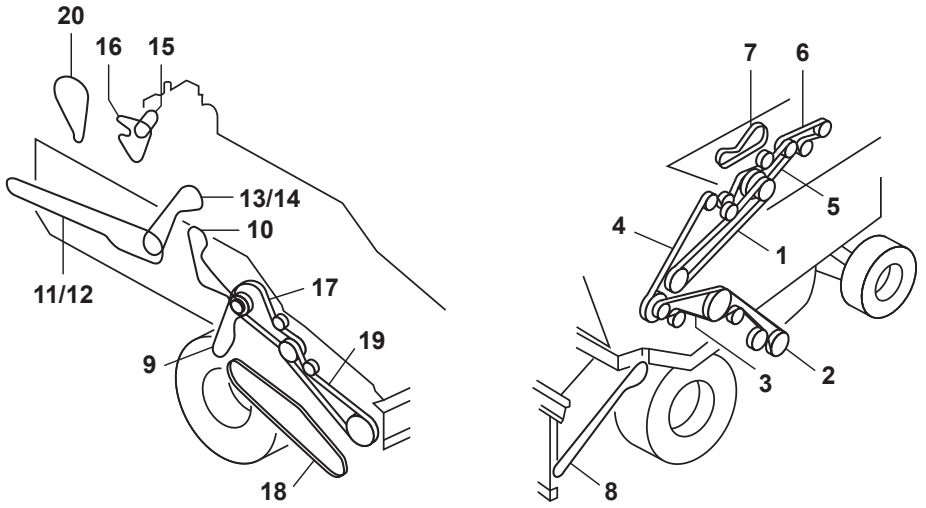

			OE	
1	UNLOADER DRIVE	1	71410767	1623311 EE-TECH
2	GRAIN ELEVATOR DRIVE	1	71410765	1923287 EE-TECH
3	SHAKER SHOE PITMAN DRIVE	1	71390199	0323233 EE-TECH
4	BEATER DRIVE	1	71388216	1425378 EE-TECH
5	MAIN COUNTERSHAFT DRIVE	1	71390188	1524314 EE-TECH
6	ROTOR PUMP DRIVE	1	71418976	1425218
7	PROPEL PUMP DRIVE	1	71418978	1224221
8	FEEDER PIVOT SHAFT DRIVE	1	71427255	1402373
9	VARIABLE SPEED FAN DRIVE	1	71394352	0709234
10	RETURN ELEVATOR DRIVE	1	71385801	0304214
11	CHOPPER DRIVE (SECONDARY)	1	71406339	0323448
12	SPREADER DRIVE (SECONDARY)	1	1680230W1	1401442
13	SPREADER DRIVE (PRIMARY)	1	71414420	0202245
14	CHOPPER DRIVE (PRIMARY)	1	71406338	0123305
15	A/C COMPRESSOR DRIVE	1	71148120	0372232
16	FAN/ALTERNATOR DRIVE	1	V625121530	0189280
17	BEATER-TO-FEEDER HOUSE JACKSHAFT	1	71398384	0127308
18	VARIABLE SPEED-TO-HEADER COUNTERSHAFT	1	71399505	0313321
19	JACKSHAFT-TO-HEADER COUNTERSHAFT	1	71399519	0144386
20	ROTARY SCREEN DRIVE	1	71396754	1900132

A85

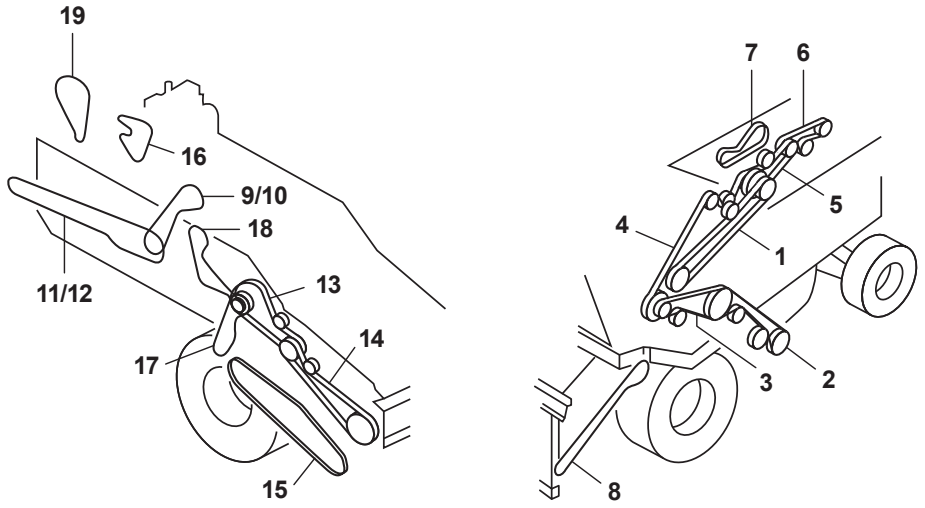

			OE	
1	BIN UNLOADER DRIVE	1	71410767	1623311 EE-TECH
2	GRAIN ELEVATOR DRIVE	1	71403685	0302248
3	SHAKER SHOE PITMAN DRIVE	1	71390199	0323233 EE-TECH
4	BEATER DRIVE	1	71388216	1425378 EE-TECH
5	MAIN COUNTERSHAFT DRIVE	1	71403721	0325367 EE-TECH
6	ROTOR PUMPS DRIVE	1	71406285	0125244
7	PROPEL PUMP DRIVE	1	71406286	0124231
8	FEEDER CONVEYOR DRIVE	1	71427255	1402373
9	SPREADER DRIVE (PRIMARY)	1	71414420	0202245
10	CHOPPER DRIVE (PRIMARY)	1	71406338	0123305
11	SPREADER DRIVE (SECONDARY)	1	1680230WI	1401442
12	CHOPPER DRIVE (SECONDARY)	1	71406339	0323448
13	BEATER-TO-FEEDER HOUSE JACKSHAFT	1	71398384	0127308
14	JACKSHAFT-TO-HEADER COUNTERSHAFT	1	71399519	0144386
15	VARIABLE SPEED-TO-HEADER COUNTERSTAFT	1	71323444	☎
16	FAN/ALTERNATOR DRIVE	1	288-1607	☎
17	VARIABLE SPEED CLEANING FAN DRIVE	1	71400662	0109227
18	RETURN ELEVATOR DRIVE	1	71385801	0304214
19	ROTARY SCREEN DRIVE	1	71396754	1900132

A85-AXIAL FLOW

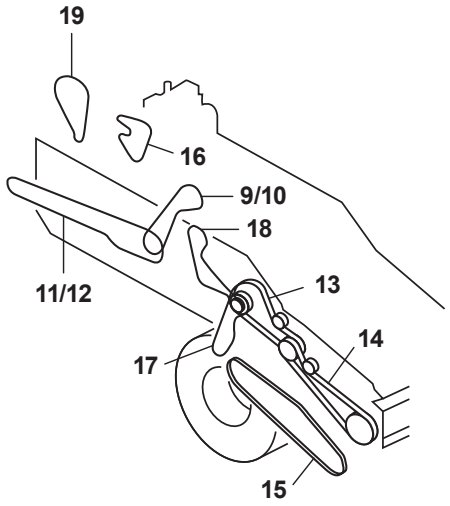

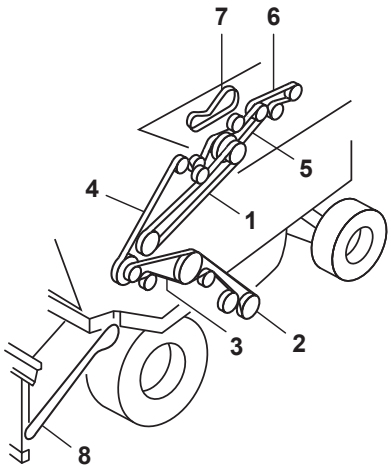

			OE	
1	ROTARY SCREEN	1	71396754	1900132
2	CLEAN GRAIN ELEVATOR DRIVE	1	71403685	0302248
3	MAIN COUNTERSHAFT	1	71403721	0325367 EE-TECH
4	BEATER-TO-JACKSHAFT	1	71398384	0127308
5	FAN/ALTERNATOR	1	288-1607	☎
6	FIXED SPEED COUNTERSHAFT DRIVE	1	71399519	0144386
7	FRONT BEATER	1	71388216	1425378 EE-TECH
8	LH PIVOT DRIVE	1	71427255	1402373
9	PITMAN DRIVE	1	71390199	0323233 EE-TECH
10	PRIMARY CHOPPER DRIVE	1	71406338	0123305
11	PRIMARY CHOPPER / SPREADER DRIVE	1	71414420	0202245
12	PROPEL PUMP DRIVE	1	71406286	0124231
13	RETURN ELEVATOR DRIVE	1	71385801	0304214
14	ROTOR PUMPS	1	71406285	0125244
15	SECONDARY CHOPPER DRIVE	1	71406339	0323448
16	SECONDARY SPREADER DRIVE	1	1680230W1	1401442
17	VARIABLE SPEED HEADER DRIVE	1	71423444	1413320
18	BIN UNLOADER	1	71410767	1623311 EE-TECH
19	FEED REVERSER CHAIN	1	71449019	Chain
20	LOWER CROSS AUGER CHAIN	1	71410789	Chain
21	UNLOADING AUGER CHAIN	1	71407328	Chain
22	BIN UNLOADING AUGER CHAIN	1	71419420	Chain

A86

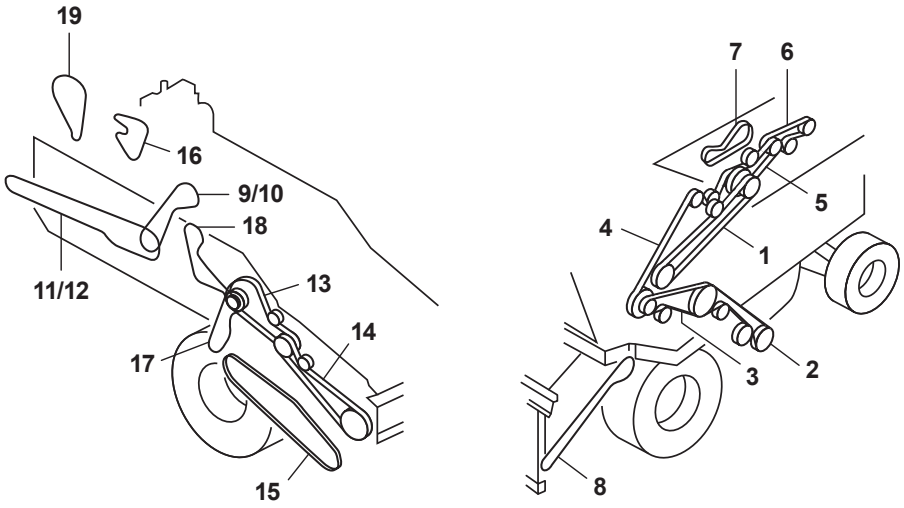

			OE	
1	BIN UNLOADER DRIVE	1	71410767	1623311 EE-TECH
2	GRAIN ELEVATOR DRIVE	1	71410765	1923287 EE-TECH
3	SHAKER SHOE PITMAN DRIVE	1	71390199	0323233 EE-TECH
4	BEATER DRIVE	1	71388216	1425378 EE-TECH
5	MAIN COUNTERSHAFT DRIVE	1	71403721	0325367 EE-TECH
6	ROTOR PUMPS DRIVE	1	71406285	0125244
7	PROPEL PUMP DRIVE	1	71406286	0124231
8	FEEDER CONVEYOR DRIVE	1	71427255	1402373
9	SPREADER DRIVE (PRIMARY)	1	71414420	0202245
10	CHOPPER DRIVE (PRIMARY)	1	71406338	0123305
11	SPREADER DRIVE (SECONDARY)	1	1680230W1	1401442
12	CHOPPER DRIVE (SECONDARY)	1	71406339	0323448
13	BEATER-TO-FEEDER HOUSE JACKSHAFT	1	71398384	0127308
14	JACKSHAFT-TO-HEADER COUNTERSHAFT	1	71399519	0144386
15	VARIABLE SPEED-TO-HEADER COUNTERSHAFT	1	71399505	0313321
16	FAN/ALTERNATOR DRIVE	1	288-1607	☎
17	VARIABLE SPEED CLEANING FAN DRIVE	1	71400662	0109227
18	RETURN ELEVATOR DRIVE	1	71385801	0304214
19	ROTARY SCREEN DRIVE	1	71396754	1900132

A86-AXIAL FLOW

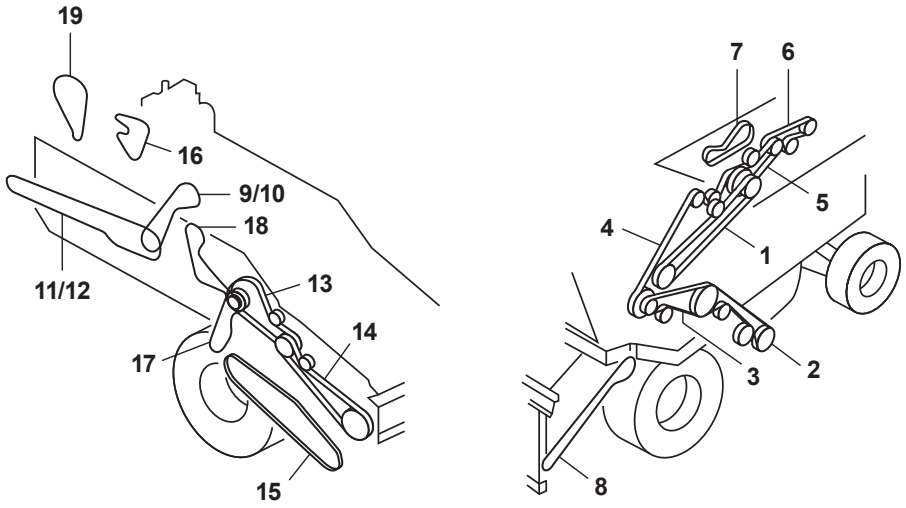

			OE	
1	BIN UNLOADER DRIVE	1	71410767	1623311 EE-TECH
2	GRAIN ELEVATOR DRIVE	1	71410765	1923287 EE-TECH
3	SHAKER SHOE PITMAN DRIVE	1	71390199	0323233 EE-TECH
4	BEATER DRIVE	1	71388216	1425378 EE-TECH
5	MAIN COUNTERSHAFT DRIVE	1	71403721	0325367 EE-TECH
6	ROTOR PUMPS DRIVE	1	71406285	0125244
7	PROPEL PUMP DRIVE	1	71406286	0124231
8	FEEDER PIVOT SHAFT DRIVE	1	71427255	1402373
9	SPREADER DRIVE (PRIMARY)	1	71414420	0202245
10	CHOPPER DRIVE (PRIMARY)	1	71406338	0123305
11	SPREADER DRIVE (SECONDARY)	1	1680230W1	1401442
12	CHOPPER DRIVE (SECONDARY)	1	71406339	0323448
13	BEATER-TO-FEEDER HOUSE JACKSHAFT	1	71398384	0127308
14	JACKSHAFT-TO-HEADER COUNTERSHAFT	1	71399519	0144386
15	VARIABLE SPEED-TO-HEADER COUNTERSHAFT	1	71399505	0313321
16	FAN/ALTERNATOR	1	288-1607	☎
17	VARIABLE SPEED CLEANING FAN DRIVE	1	71400662	0109227
18	RETURN ELEVATOR DRIVE	1	71385801	0304214
19	ROTARY SCREEN DRIVE	1	71396754	1900132

N5 - N6 - N7 - R5 - R6 - R7

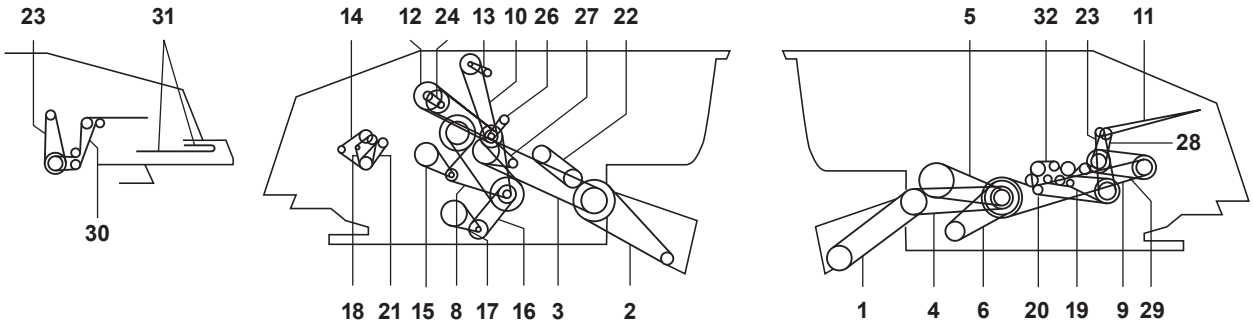

			OE	
1	CONSTANT SPEED HEADER DRIVE (N5 - PRIOR TO SN 4501; N6 - PRIOR TO SN 5101; N7 - PRIOR TO SN 2501)	2	71301859V	1401275
1	CONSTANT SPEED HEADER DRIVE (N5 - EFF. SN 4501; N6 - EFF. SN 5101; N7 - EFF. SN 2501; R5; R6; R7)	1	71320449V	☎
1	VARIABLE SPEED HEADER DRIVE (N5 - PRIOR TO SN 4501; N6 - PRIOR TO SN 5101; N7 - PRIOR TO SN 2501)	1	71197876V	☎
1	VARIABLE SPEED HEADER DRIVE (N5 - EFF. SN 4501; N6 - EFF. SN 5101; N7 - EFF. SN 2501; R5; R6; R7)	1	71316268V	0212312
2	PIVOT SHAFT DRIVE (N5 - PRIOR TO SN 4501; N6 - PRIOR TO SN 5101; N7 - PRIOR TO SN 2501)	1	71309150V	☎
2	PIVOT SHAFT DRIVE (N5 - EFF. SN 4501; N6 - EFF. SN 5101; N7 - EFF. SN 2501; R5; R6; R7)	2	71316263V	0201333
3	REAR FEED CONVEYOR DRIVE (N5; N6; N7; R5; R6; R7)	1	71326830V	☎
4	PIVOT DRIVE, LEFT HAND (N5; N6; N7; R5; R6; R7)	1	71310382V	0224292 EE-TECH
5	UNLOADER DRIVE, LEFT HAND (N5; N6; N7; R5; R6; R7)	1	71310380V	0702225
6	HYDRO DRIVE (N5; N6; R5; R6)	1	71197999V	0324261 EE-TECH
6	HYDRO DRIVE (N7 - EFF. SN 4800; R7)	1	71342143V	☎
7	CYLINDER DRIVE (N5 - EFF. SN 6101; N6 - EFF. SN 7301; N7; R5; R6; R7)	1	71364789V	☎
8	OVERFEED AUGER DRIVE (N5 - PRIOR TO SN 4501; N6 - PRIOR TO SN 5101; N7 - PRIOR TO SN 2510)	2	71309685V	☎
8	OVERFEED AUGER DRIVE (N5 - EFF. SN 4501; N6 - EFF. SN 5101; N7 - EFF. SN 2501; R5; R6; R7)	2	71325150V	0101245
9	MAIN DRIVE (N7; R7)	1	71307200V	☎
9	MAIN DRIVE (N6 - PRIOR TO SN 5101)	1	71314273V	☎
9	MAIN DRIVE (N5; N6 - EFF. SN 5101; R5; R6)	1	71336997V	☎
10	CLEAN GRAIN ELEVATOR DRIVE	1	71325847V	0202230
11	SPREADER DRIVE, WITH CHOPPER	1	71326253V	0301360
11	SPREADER DRIVE, WITHOUT CHOPPER (N5; N6; N7; R7)	1	71334919V	1401260
11	SPREADER DRIVE, WITHOUT CHOPPER (R5; R6)	1	71347560V	0701418
12	CAGE SWEEP DRIVE (N5 - EFF. SN 1301; N6 - EFF. SN 1501; N7; R5; R6; R7)	1	71312339V	0300206
14	ALTERNATOR DRIVE (N7; R7)	1	71175687	1472251
14	ALTERNATOR DRIVE, HEAVY- DUTY (N5 - PRIOR TO SN 4501; N6 - PRIOR TO SN 5101)	1	71306200V	0372268
14	ALTERNATOR DRIVE, 110 AMP (N5 - EFF. SN 4501- 6101; N6 - EFF. SN 5105- 7301)	2	71186454V	1472264
14	ALTERNATOR DRIVE, 105 AMP (N5 - EFF. SN 6101; N6 - EFF. SN 7301; R5; R6)	1	71336137V	0372260
15	TAILINGS DRIVE (N5; N6; N7; R5; R6; R7)	1	71346200	1900123
16	FAN DRIVE (N5 - PRIOR TO SN 6101; N6 - PRIOR TO SN 7301; N7 - PRIOR TO SN 4501)	1	71340653	0201173
16	FAN DRIVE (N5 - EFF. SN 6101; N6 - EFF. SN 7301; N7 - EFF. SN 4501; R5; R6; R7)	1	71339886V	0202168
17	SHOE DRIVE	2	71336307V	0272247
18	FAN DRIVE, SET (N5; N6; R5; R6)	1	71302482V	☎
18	FAN DRIVE, SET (N7; R7)	2	74321275V	1472264
19	JACKSHAFT DRIVE	1	71313804	0201161

N5 - N6 - N7 - R5 - R6 - R7 (CONTINUED)

			OE	
20	CYLINDER AUGER DRIVE	1	71319657V	☎
21	COMPRESSOR DRIVE (N5; N6; R5; R6)	1	71193420	0372240
21	COMPRESSOR DRIVE (N7; R7)	1	71315910V	☎
22	UNLOADER DRIVE, RIGHT HAND (N5 - PRIOR TO SN 4501; N6 - PRIOR TO SN 5101; N7 - PRIOR TO SN 1701)	1	71177795	☎
23	IMPELLER DRIVE (N5 - PRIOR TO SN 6101; N6 - PRIOR TO SN 7301; N7 - PRIOR TO SN 4501)	1	71313804	0201161
23	IMPELLER DRIVE, WITH SINGLE SPREADER (N5 - EFF. SN 4501; N6 - EFF. SN 5101; N7 - EFF. SN 1262)		71322418V	☎
23	IMPELLER DRIVE, WITH DUAL SPREADER (N5 - EFF. SN 6101; N6 - EFF. SN 7301; N7; R5; R6; R7)	2	71358134V	1601166
25	TAILINGS RETURN DRIVE	1	71337000V	0101184
28	STRAW CHOPPER DRIVE	1	71358486V	☎
29	STRAW CHOPPER / JACKSHAFT DRIVE	1	71344935V	☎
30	SPREADER JACKSHAFT DRIVE (N5 - EFF. SN 6101; N6 - EFF. SN 7301; N7; R5; R6; R7)	1	71347560V	0701418
31	SPREADER DRIVE, WITH DUAL SPREADER (N5 - EFF. SN 6101; N6 - EFF. SN 7301; N7; R5; R6; R7)	2	71347561V	0201258

R40 - R50

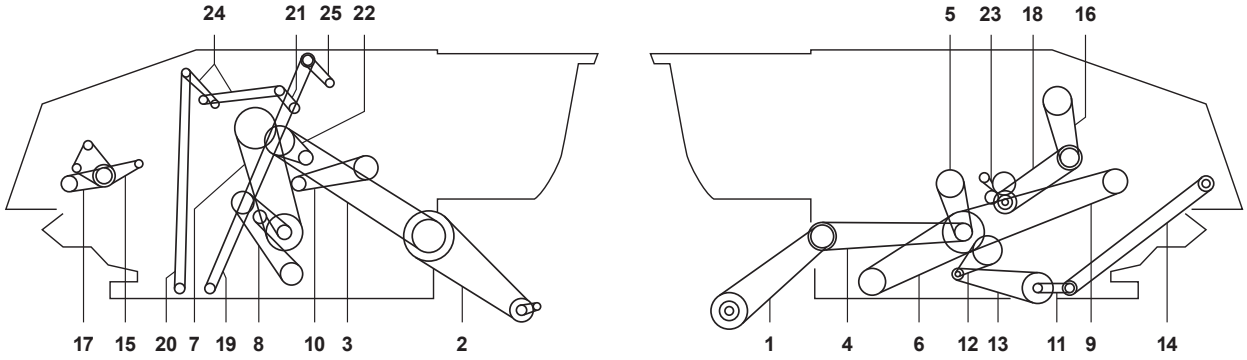

			OE	
1	VARIABLE SPEED HEADER DRIVE	1	71316268	0212312
1	CONSTANT SPEED HEADER DRIVE	1	71320449	☎
2	PIVOT SHAFT DRIVE, RIGHT HAND (R40 - PRIOR TO SN 2001; R50 - PRIOR TO SN 3501)	2	71316263V	0201333
2	PIVOT SHAFT DRIVE, RIGHT HAND (R40 - EFF. SN 2001; R50 - EFF. SN 3501)	1	71354198V	0202305
3	REAR FEED CONVEYOR DRIVE	1	71335475	1402355
4	PIVOT JACKSHAFT DRIVE	1	71355232	0123323
5	BIN UNLOADER DRIVE, LEFT HAND	1	71398366	2902164
6	HYDRO DRIVE	1	71364912	☎
7	VARIABLE SPEED CYLINDER DRIVE	1	71335788	☎
8	SEPARATOR DRIVE	1	71358255	1623311 EE-TECH
9	MAIN DRIVE	1	71351260V	0724423
14	STRAW SPREADER DRIVE	1	71355170	1401412
15	ALTERNATOR DRIVE	1	71352139	0172217
16	CHOPPER / IMPELLER DRIVE	2	71336199V	0102174
17	COMPRESSOR DRIVE	1	71352729	0372242
18	JACKSHAFT DRIVE	1	71333673V	2602194

R42 - R52 - R55

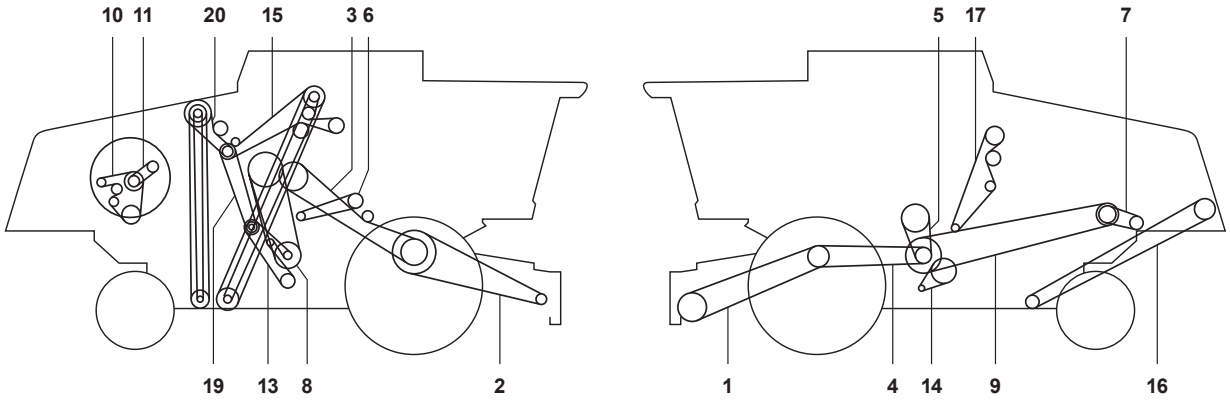

1	VARIABLE SPEED HEADER DRIVE	1	71390886	☎
1	CONSTANT SPEED HEADER DRIVE	1	71364514	0201333
2	RIGHT HAND PIVOT SHAFT DRIVE (R42 - PRIOR TO SN 43001; R52 - PRIOR TO SN 53001)	1	71364155	2002342
2	RIGHT HAND PIVOT SHAFT DRIVE (R42 - PRIOR TO SN 43001; R52 - PRIOR TO SN 53001; R55)	1	71374306	0302345
3	REAR FEED CONVEYOR DRIVE	1	71335475	1402355
4	PIVOT JACKSHAFT DRIVE	1	71355232	0123323
5	BIN UNLOADER DRIVE LEFT HAND	1	71398366	2902164
7	HYDRO DRIVE (R42 - PRIOR TO SN 46001; R52 - PRIOR TO SN 56001)	1	71364912	☎
7	HYDRO DRIVE (R42 - EFF. SN 46001; R52 - EFF. TO SN 56001; R55)	1	71374277	0323282
8	VARIABLE SPEED CYLINDER DRIVE	1	71335788	☎
9	MAIN DRIVE, AIR COOLED (R42 - PRIOR TO SN 48001; R52 - PRIOR TO SN 58000)	1	71351260	0724423
9	MAIN DRIVE, LIQUID COOLED (R42 - PRIOR TO SN 43001; R52 - PRIOR TO SN 53001; R55)	1	71366207	☎
10	ALTERNATOR / FAN DRIVE (R42 - EFF. SN 48001; R52 - EFF. SN 58001; R55)	1	A3289224	0385289
10	ALTERNATOR, AIR COOLED (R42 - PRIOR TO SN 48001; R52 - PRIOR TO SN 58000)	1	71352139	0172217
10	ALTERNATOR, LIQUID COOLED (R42 - EFF. SN 48001; R52 - EFF. SN 58000)	1	71352142	0172219
10	A/C COMPRESSOR DRIVE (R42 - EFF. SN 48001; R52 - EFF. SN 58001; R55)	1	71369747	1472227
11	COMPRESSOR DRIVE (R42 - PRIOR TO SN 48001; R52 - PRIOR TO SN 58000)	1	71352729	0372242
11	COMPRESSOR DRIVE, LIQUID COOLED (R42 - EFF. SN 43001 - 48001; R52 - EFF. SN 53001 - 58000)	1	71367191	0172225
13	SEPERATOR DRIVE	1	71358255	1623311 EE-TECH
14	SHOE DRIVE (R42 - EFF. SN 43001 - 46001; R52 - EFF. 53001 - 56001)	1	71364077	☎
14	SHOE DRIVE (R42 - EFF. SN 46001; R52 - EFF. TO SN 56001; R55)	1	71374305	0168239
15	CLEAN GRAIN ELEVATOR DRIVE (R42 - EFF. SN 43001; R52 - EFF. SN 53001; R55)	1	71368809	1902351
16	STRAW SPREADER DRIVE	1	71355170	1401412
17	CHOPPER / IMPELLER DRIVE	1	71386695	0302258
17	FINE CUT CHOPPER DRIVE (R55)	1	71381955	0202275
19	JACKSHAFT DRIVE RIGHT HAND (R42 - EFF. SN 43001; R52 - EFF. SN 53001; R55)	1	71367469	0723228 EE-TECH
20	TAILINGS DRIVE (R42 - EFF. SN 48001; R52 - EFF. SN 58001; R55)	1	71367459	0102180
20	TAILINGS DRIVE, WITH TAILINGS RETURN (R42 - EFF. SN 48001; R52 - EFF. SN 58001; R55)	1	71367460	0205207

R60 - R70

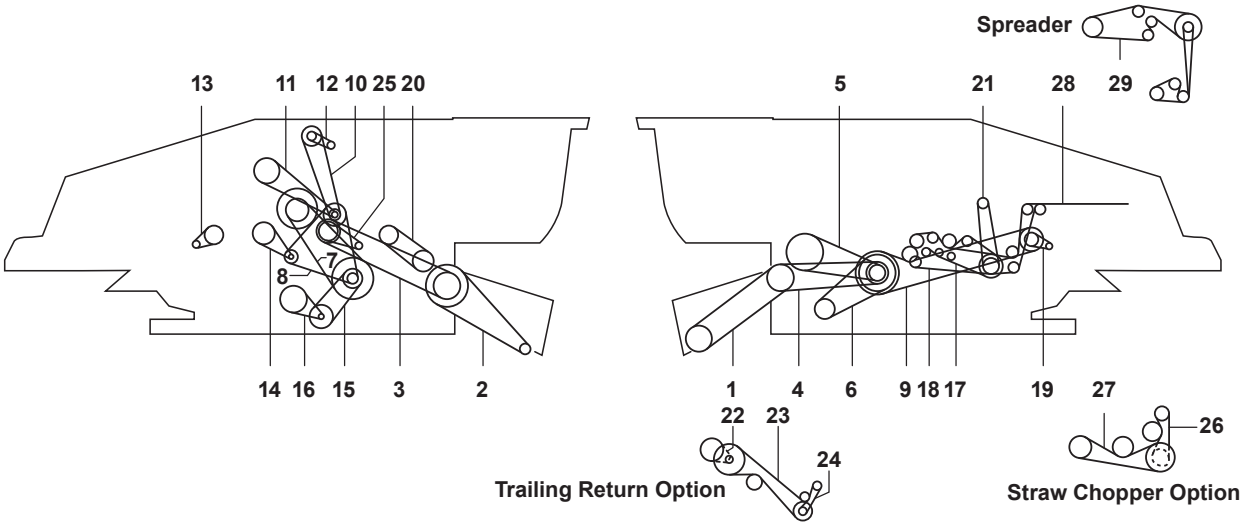

			OE	
1	VARIABLE SPEED HEADER DRIVE	1	71316268	0212312
1	CONSTANT SPEED HEADER DRIVE	1	71320449V	☎
2	PIVOT SHAFT DRIVE (R60 - PRIOR TO SN 16501; R70 - PRIOR TO SN 12501)	2	71316263V	0201333
2	PIVOT SHAFT DRIVE (R60 - EFF. SN 16501; R70 - EFF. SN 12501)	1	71354198V	0202305
3	REAR FEED CONVEYOR DRIVE (R60 - PRIOR TO SN 16501; R70 - PRIOR TO SN 12501)	1	71326830V	☎
3	REAR FEED CONVEYOR DRIVE (R60 - EFF. SN 16501; R70 - EFF. SN 12501)	1	71345800V	0302336
4	PIVOT DRIVE, LEFT HAND	1	71310382V	0224292 EE-TECH
5	UNLOADER DRIVE, LEFT HAND (R60 - PRIOR TO SN 15801; R70 - PRIOR TO SN 11801)	1	71310380V	0702225
5	UNLOADER DRIVE, POWER ENGAGE (R60 - EFF. SN 15801; R70 - EFF. SN 11801)	1	71356409V	1902206
6	HYDRO DRIVE (R60)	1	71197999V	0324261 EE-TECH
6	HYDRO DRIVE (R70)	1	71342143V	☎
7	CYLINDER DRIVE	1	71364789V	☎
8	SEPARATOR DRIVE	2	71325150V	0101245
9	MAIN DRIVE (R60)	1	71348999V	☎
9	MAIN DRIVE (R70)	1	71348989V	☎
10	CLEAN GRAIN ELEVATOR DRIVE	1	71325847V	0202230
11	CAGE SWEEP DRIVE	1	71312339V	0300206
13	ALTERNATOR DRIVE	1	71352142	0172219
14	TAILINGS DRIVE	1	71345785V	0200125
15	FAN DRIVE	1	71339886V	0202168
16	SHOE DRIVE	2	71336307V	0272247
17	JACKSHAFT DRIVE (R60 - PRIOR TO SN 16501; R70 - PRIOR TO SN 12501)	1	71313804	0201161
17	JACKSHAFT DRIVE (R60 - EFF. SN 16501; R70 - EFF. SN 12501)	1	71354210V	2902164
18	DISTRIBUTION AUGER DRIVE (R60 - PRIOR TO SN 16501; R70 - PRIOR TO SN 12501)	1	71319657V	☎
18	DISTRIBUTION AUGER DRIVE (R60 - EFF. SN 16501; R70 - EFF. SN 12501)	1	71348772V	2604217
19	COMPRESSOR DRIVE	1	71193420	0372240
21	IMPELLER DRIVE (R60 - PRIOR TO SN 16501; R70 - PRIOR TO SN 12501)	1	71358134V	1601166
21	IMPELLER DRIVE (R60 - EFF. SN 16501; R70 - EFF. SN 12501)	2	71359681V	2301174
23	TAILINGS DRIVE, WITH TAILINGS RETURN OPTION (R60 - EFF. SN 16501; R70 - EFF. SN 12501)	1	71337000V	0101184
26	STRAW CHOPPER DRIVE	1	71358486V	☎
27	CHOPPER JACKSHAFT DRIVE	1	71358487V	2602213
28	SPREADER JACKSHAFT DRIVE	1	71347560V	0701418
29	SPREADER DRIVE	1	71347561V	0201258

R62 - R72

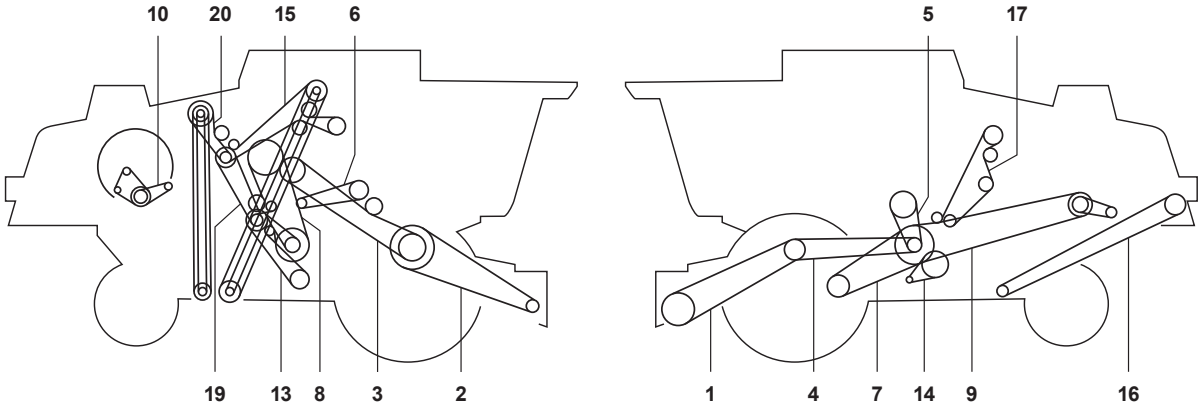

			OE	
1	CONSTANT SPEED HEADER DRIVE (R62 - EFF. SN 68001; R72 - EFF. SN 78001)	1	71364514	0201333
1	VARIABLE SPEED HEADER DRIVE (R62 - EFF. SN 68001; R72 - EFF. SN 78001)	1	71390885	☎
1	VARIABLE SPEED HEADER DRIVE (R62 - PRIOR TO SN 68000; R72 - PRIOR TO SN 78000)	1	71390886	☎
2	RIGHT HAND PIVOT SHAFT DRIVE (R62 - PRIOR TO SN 63001; R72 - PRIOR TO SN 73001)	1	71364155	2002342
2	RIGHT HAND PIVOT SHAFT DRIVE (R 62 - EFF. SN 63001; R72 - EFF, SN 73001)	1	71374306	0302345
3	REAR FEED CONVEYOR DRIVE	1	71335475	1402355
4	PIVOT JACKSHAFT DRIVE (2B)	1	71355232	0123323
4	PIVOT JACKSHAFT DRIVE (2C) (R62 - EFF. SN 68001; R72 - EFF. SN 78001)	1	71377787	0327346
5	BIN UNLOADER DRIVE LH	1	71398366	2902164
5	BIN UNLOADER DRIVE LH, TURRET (R62 - EFF. SN 68001; R72 - EFF. SN 78001)	1	71380601	2623222 EE-TECH
7	HYDRO DRIVE (R 62 - PRIOR TO SN 66001; R72 - EFF. TO SN 76001)	1	71363595	0324299
7	HYDRO DRIVE (R 62 - PRIOR TO SN 66001; R72 - EFF. TO SN 76001)	1	71374276	0324284
8	CYLINDER DRIVE	1	71399514	☎
9	MAIN DRIVE (R62 - PRIOR TO SN 63001; R72 - PRIOR TO SN 73001)	1	71363804	0124456
9	MAIN DRIVE (R62 - EFF. SN 63001 - 64001)	1	71366207	☎
9	MAIN DRIVE (R62 - EFF. SN 64001)	1	71368135	0325441
9	MAIN DRIVE (R72 - EFF. SN 73001)	1	71370279	0325442
9	MAIN DRIVE, AIR COOLED (R62 - PRIOR TO SN 68000; R72 - PRIOR TO SN 78000)	1	71370214	1425459
10	ALTERNATOR / FAN DRIVE (R62 - PRIOR TO SN MJ62101)	1	A3289224	0385289
10	ALTERNATOR / FAN DRIVE, WITH QSC (R62 - EFF. SN MJ62101)	1	3289470	1985296
10	A/C COMPRESSOR DRIVE (R62 - EFF. SN 68001)	1	71369747	1472227
10	ALTERNATOR DRIVE (R72 - EFF. SN 78001)	1	3028521V	0188231
10	FAN DRIVE, 48.0" O.L., STANDARD (R72 - EFF. SN 78001)	1	A3288601	0285251
10	FAN DRIVE, 48.5" O.L., OPTION (R72 - EFF. SN 78001)	1	A3288623	0285251
10	A/C COMPRESSOR DRIVE (R62 - PRIOR TO SN 79001)	1	202045	0372242
10	A/C COMPRESSOR DRIVE (R72 - EFF. SN 79001)	1	71148120	0372232
13	SEPARATOR DRIVE	1	71363802	1424313
14	SHOE DRIVE (R62 - PRIOR TO SN 66001; R72 - PRIOR TO SN 76001)	1	71364077	☎
14	SHOE DRIVE (R62 - EFF. SN 66001; R72 - EFF. TO SN 76001)	1	71374305	0168239
15	CLEAN GRAIN ELEVATOR DRIVE	1	71368809	1902351
16	STRAW SPREADER DRIVE	1	71355170	1401412
17	CHOPPER / IMPELLER DRIVE (R62 - EFF. SN 68001; R72 - EFF. SN 78001)	1	71386695	0302258
17	REAR FEED / FINE CUT CHOPPER DRIVE (R62 - EFF. SN 68001; R72 - EFF. SN 78001)	1	71381955	0202275
19	JACKSHAFT DRIVE RH (R62 - PRIOR TO SN 63001; R72 - PRIOR TO SN 73001)	1	71363793	0323225 EE-TECH
19	JACKSHAFT DRIVE RH (R62 - PRIOR TO SN 63001; R72 - PRIOR TO SN 73001)	1	71367469	0723228 EE-TECH
20	TAILINGS DRIVE (R62 - EFF. SN 68001; R72 - EFF. SN 78001)	1	71367459	0102180
20	TAILINGS DRIVE, WITH TAILINGS RETURN (R62 - EFF. SN 68001; R72 - EFF. SN 78001)	1	71367460	0205207
0	SPREADER PUMP DRIVE (R62 - EFF. SN 68001; R72 - EFF. SN 78001)	1	71379787	0168253

R65 - R75

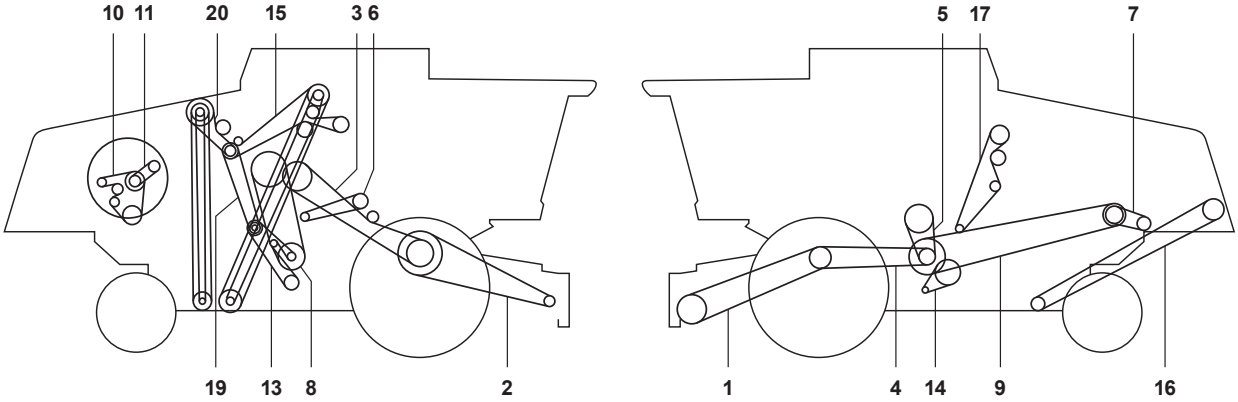

			OE	
1	VARIABLE SPEED HEADER DRIVE	1	71390885	☎
1	CONSTANT SPEED HEADER DRIVE	1	71364514	0201333
2	RIGHT HAND PIVOT SHAFT DRIVE (R65 - PRIOR TO SN HS62101; R75 - PRIOR TO SN HS72101)	1	71374306	0302345
2	RIGHT HAND PIVOT SHAFT DRIVE (R65 - EFF. SN HS62101; R75 - EFF. SN HS72101)	1	71368809	1902351
3	REAR FEED CONVEYOR DRIVE	1	71335475	1402355
4	PIVOT JACKSHAFT DRIVE	1	71377787	0327346
5	BIN UNLOADER DRIVE, LH	1	71398366	2902164
5	BIN UNLOADER DRIVE, LH WITH TURRET	1	71380601	2623222 EE-TECH
7	PROPEL PUMP DRIVE HYDRO (R65 - PRIOR TO SN HR62101)	1	71418977	1424219
7	PROPEL PUMP DRIVE HYDRO (EFF. SN HR62101)	1	71390561	0323219
8	CYLINDER DRIVE	1	71399514	☎
9	MAIN DRIVE (R65)	1	71368135	0325441
9	MAIN DRIVE (R75)	1	71370279	0325442
10	ALTERNATOR / FAN DRIVE (R65 - PRIOR TO SN HR62101) (CUMMINS)	1	A3289503	0285297
10	ALTERNATOR / FAN DRIVE (R75 - PRIOR TO SN HR72101) (CUMMINS)	1	3028521V	0188231
10	ALTERNATOR / FAN DRIVE (EFF. SN HR62101)	1	V685121585	1489286
10	ALTERNATOR / FAN DRIVE (PRIOR. ENG. SN T11858)	1	V685121585	1489286
10	ALTERNATOR / FAN DRIVE (EFF. ENG. SN T11858)	1	V685121530	0189280
10	FAN DRIVE, 48.0" O.L., STANDARD (R75 - PRIOR TO SN HR72101) (CUMMINS)	1	A3288601	0285251
10	FAN DRIVE, 48.5" O.L., OPTION (R75 - PRIOR TO SN HR72101) (CUMMINS)	1	A3288623	0285251
11	A/C COMPRESSOR DRIVE (R65 - PRIOR TO SN HR62101)	1	71369747	1472227
11	A/C COMPRESSOR DRIVE (R65 - EFF. SN HR62101)	1	71148120	0372232
13	SEPARATOR DRIVE	1	71363802	1424313
14	SHOE DRIVE	1	71374305	0168239
15	CLEAN GRAIN ELEVATOR DRIVE	1	71368809	1902351
16	STRAW SPREADER DRIVE	1	71355170	1401412
17	IMPELLER / CHOPPER DRIVE	1	71386695	0302258
17	FINE CUT CHOPPER DRIVE	1	71381955	0202275
19	RIGHT HAND JACKSHAFT DRIVE	1	71367469	0723228 EE-TECH
20	TAILINGS DRIVE	1	71367459	0102180
20	TAILINGS DRIVE, WITH TAILINGS RETURN	1	71367460	0205207
0	SPREADER PUMP DRIVE	1	71379787	0168253

R66 - R76

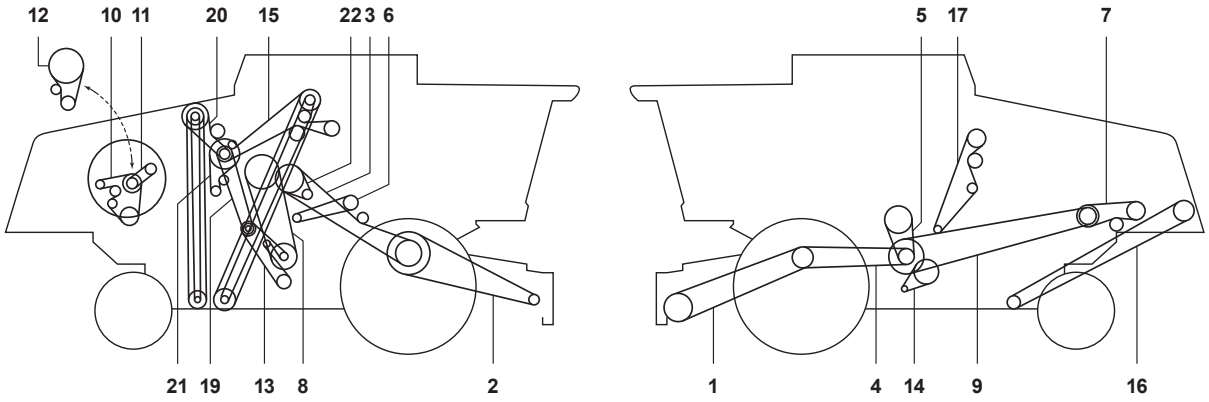

			OE	
1	VARIABLE SPEED HEADER DRIVE	1	71390885	☎
1	CONSTANT SPEED HEADER DRIVE	1	71364514	0201333
2	RIGHT HAND PIVOT SHAFT DRIVE	1	71427254	1902351
3	REAR FEED CONVEYER DRIVE	1	71335475	1402355
4	LH PIVOT JACKSHAFT DRIVE	1	71377787	0327346
5	BIN UNLOADER DRIVE, LH (SWIVEL)	1	71426450	0223204
5	BIN UNLOADER DRIVE, LH (TURRET)	1	71380601	2623222 EE-TECH
7	PROPEL PUMP DRIVE	1	71390561	0323219
8	CYLINDER DRIVE	1	71399514	☎
9	MAIN DRIVE	1	71370279	0325442
10	ALTERNATOR / FAN DRIVE	1	V685121530	0189280
11	A/C COMPRESSOR DRIVE	1	71148120	0372232
12	ROTARY SCREEN DRIVE	1	71396754	1900132
13	SEPARATOR DRIVE	1	71363802	1424313
14	SHOE DRIVE	1	71374305	0168239
15	CLEAN GRAIN ELEVATOR DRIVE	1	71368809	1902351
16	STRAW SPREADER DRIVE	1	71355170	1401412
17	IMPELLER / CHOPPER DRIVE	1	71386695	0302258
17	FINE CUT CHOPPER DRIVE	1	71381955	0202275
18	INNER SLOWDOWN (NOT ILLUSTRATED)	1	71395108	0101151
18	SLOWDOWN (NOT ILLUSTRATED)	1	71394979	0101151
19	RH JACKSHAFT DRIVE	1	71367469	0723228 EE-TECH
19	RH JACKSHAFT DRIVE (POPCORN SPECIAL)	1	71368072	0323233 EE-TECH
20	TAILINGS DRIVE	1	71367459	0102180
20	TAILINGS DRIVE (WITH TAILINGS RETURN)	1	71367460	0205207
21	SPREADER PUMP DRIVE (NOT ILLUSTRATED)	1	71379787	0168253

330 - 430

			OE	
1	REEL DRIVE VARIABLE SPEED	1	Z20459	0809104
2	STRAW ELEVATOR DRIVE	1	Z20460	0302248
3	REEL DRIVE	1	Z20562	0202305
4	HYDRAULIC PUMP DRIVE	1	Z21171	0372232
4	HYDRAULIC PUMP DRIVE	1	Z21254	0200104
4	HYDRAULIC PUMP DRIVE	1	Z21137	0400081
4	HYDRAULIC PUMP DRIVE	1	Z23752	0372204
5	UNLOADING SYSTEM	1	Z21400	0102137
5	UNLOADING SYSTEM	1	Z21398	0202139
6	THRESHING DRUM VARIATOR DRIVE	1	Z21402	0339320
6	THRESHING DRUM VARIATOR DRIVE	1	Z21401	0239321
7	SICKLE KNIFE DRIVE	1	Z23693	0202245
8	TRACTION DRIVE	1	H25645	0210244
9	FAN DRIVE VARIABLE SPEED	1	Z20459	0809104
10	FAN DRIVE	1	Z20703	0102231
11	CYLINDER DRIVE	1	Z20823	0713182
12	ROTARY SCREEN - ELEVATOR	1	Z20743	0202168
13	HYDRAULIC PUMP DRIVE - ENGINE	1	T23505	0201092

484

			OE	
1		2	N125756	0268310
2		1	N15201	0102125
3		1	L4490N	0402159
4		1	E61137	0202182
5		1	N121114	0302197
6		1	E58483	0502215
7		1	N30716	0702272
8		1	N12551	0202230
9		1	N110051	0302248
10		1	N121235	1402355

JOHN DEERE

530 - 630

			OE	
1	REEL DRIVE VARIABLE SPEED	1	Z20459	0809104
2	REEL DRIVE	1	Z20562	0202305
3	HYDRAULIC PUMP DRIVE	1	Z21171	0372232
3	HYDRAULIC PUMP DRIVE	1	Z21254	0200104
4	UNLOADING SYSTEM	1	Z21400	0102137
4	UNLOADING SYSTEM	1	Z21398	0202139
5	THRESHING DRUM VARIATOR DRIVE	1	Z21403	0239320
6	SICKLE KNIFE DRIVE	1	Z21500	0203270
7	STRAW ELEVATOR DRIVE	1	Z21501	0203267
9	FAN DRIVE VARIABLE SPEED	1	Z20459	0809104
10	FAN DRIVE	1	Z20703	0102231
11	ROTARY SCREEN - ELEVATOR	1	Z20743	0202168
12	CYLINDER DRIVE	1	Z20823	0713182
13	HYDRAULIC PUMP DRIVE - ENGINE	1	T23505	0201092
13	HYDRAULIC PUMP DRIVE - ENGINE	1	Z22208	0172230

730

			OE	
1	REEL DRIVE VARIABLE SPEED	1	Z20459	0809104
1	KNIFE DRIVE	1	188716C1	0302220
2	REEL DRIVE	1	Z20562	0202305
2	REEL DRIVE (FRONT) (PRIMARY)	1	132374C1	0701268
3	HYDRAULIC PUMP DRIVE	1	Z21254	0200104
3	DRAPER COUNTERSHAFT DRIVE	1	1336591C1	☎
4	UNLOADING SYSTEM	1	Z21400	0102137
4	MAIN DRIVE	1	1276589C1	0202310
5	SICKLE KNIFE DRIVE	1	Z21500	0203270
5	SICKLE KNIFE DRIVE	1	Z21501	0203267
5	DRAPER DRIVE WIDE OPENING	1	617910R1	0301147
6	STRAW ELEVATOR DRIVE	1	Z21501	0203267
6	DRAPER DRIVE NARROW OPENING	1	1276707C1	0201177
7	THRESHING DRUM VARIATOR DRIVE	1	Z22648	0239320
9	FAN DRIVE VARIABLE SPEED	1	Z20459	0809104
10	FAN DRIVE	1	Z20703	0102231
11	ROTARY SCREEN - ELEVATOR	1	Z20743	0202168
12	CYLINDER DRIVE	1	Z20823	0713182
13	HYDRAULIC PUMP DRIVE - ENGINE	1	Z22208	0172230

800

			OE	
1	FAN DRIVE	1	E50973	0100083
2	GOVERNOR DRIVE	1	E57428	0172225
3	DRIVE (PRIMARY)	2	E48060	0268344
4	DRIVE (SECONDARY)	1	AE31453	☎
5	STEERING	1	E48063	0209138

830

			OE	
1	FAN DRIVE	1	E50973	0100083
2	GOVERNOR DRIVE	1	E57428	0172225
3	DRIVE (SECONDARY)	1	AE31453	☎
4	STEERING	1	E48063	0209138
6	DRIVE (PRIMARY)	2	E48060	0268344

880

			OE	
1	COMPRESSOR DRIVE	1	H29528	☎
2	PLATFORM DRIVE	1	E37821	0224153

900 - 900 R - 900 F

			OE	
1		1	H136963	0302240
2		1	H202646	0202245
3		1	H202647	0302251

930 - 940

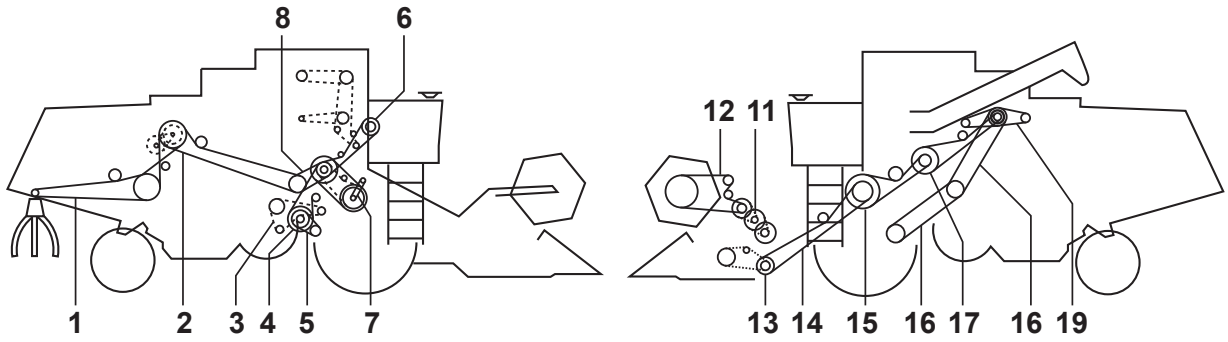

			OE	
1	STRAW SPREADER DRIVE	1	Z32041	0301360
1	STRAW SPREADER	1	Z32158	1201291
3	FAN DRIVE	1	Z20703	0102231
4	FAN DRIVE VARIABLE SPEED	1	Z20459	0809104
5	CYLINDER VARIATOR DRIVE	1	Z20823	0713182
6	ROTARY SCREEN DRIVE	1	Z20743	0202168
7		1	Z31867	/
8	STRAW WALKER DRIVE (940)	1	Z30920	0201333
9	(940)	1	Z32883	0300212
10	PURIFY DRIVE	1	Z31283	0283314
11	ROTARY SCREEN DRIVE	1	Z28458	0402170
12	REEL DRIVE (930)	1	Z20562	0202305
13	REEL DRIVE VARIABLE SPEED (930)	1	Z36813	0209107
14	SICKLE KNIFE DRIVE (930)	1	Z23693	0202245
14	SICKLE KNIFE DRIVE	1	Z30130	0203295
15	STRAW ELEVATOR DRIVE (930)	1	Z31816	0302251
15	STRAW ELEVATOR DRIVE	1	Z21501	0203267
16	TRACTION VARIATOR DRIVE	1	Z31367	0211256
17	THRESHING DRUM VARIATOR DRIVE	1	Z31191	0339320
18	UNLOADING SYSTEM	1	Z21400	0102137
19	HYDRAULIC PUMP DRIVE	1	Z30593	0201108

950 - 960 - 970

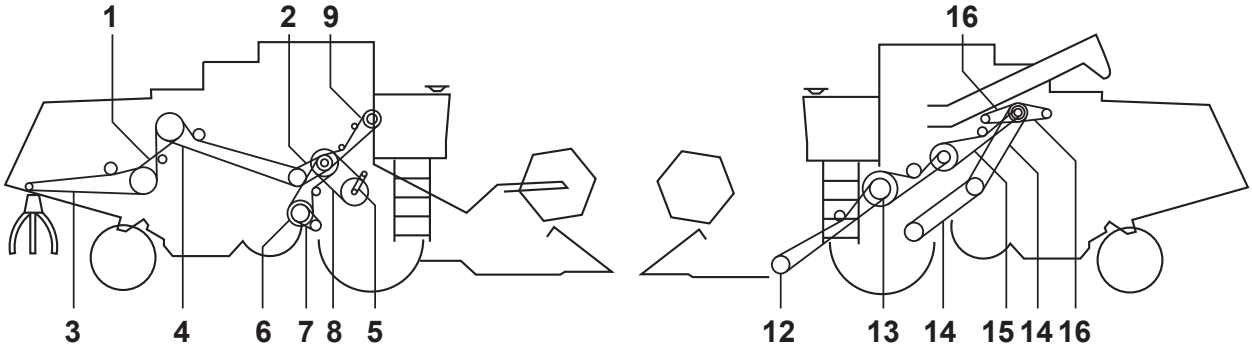

			OE	
1		1	Z32883	0300212
2	STRAW WALKER DRIVE	1	Z25473	0102137
3	STRAW SPREADER DRIVE	1	Z32041	0301360
3		1	Z33774	1401336
4	STRAW WALKER DRIVE	1	Z30920	0201333
5		1	Z31867	/
6	FAN DRIVE	1	Z20703	0102231
7	FAN DRIVE VARIABLE SPEED	1	Z20459	0809104
8	CYLINDER VARIATOR DRIVE	1	Z20823	0713182
9	ROTARY SCREEN DRIVE	1	Z20743	0202168
10	PURIFY DRIVE	1	Z31283	0283314
11	WATERPUMP DRIVE	1	AT28030	0273228
11	WATERPUMP DRIVE	1	T23505	0201092
11	WATERPUMP DRIVE	1	T20334	0201092
12	SICKLE KNIFE DRIVE	1	Z30130	0203295
12	SICKLE KNIFE DRIVE	1	Z25670	0203328
13	STRAW ELEVATOR DRIVE	1	Z21501	0203267
13	STRAW ELEVATOR DRIVE	1	Z32568	0223304
14	TRACTION VARI DRIVE	2	Z34121	0312267
15	THRESHING DRUM VARIATOR DRIVE	1	Z21403	0239320
16	UNLOADING SYSTEM	1	Z21400	0102137
17	HYDRAULIC PUMP DRIVE	1	Z30593	0201108

952

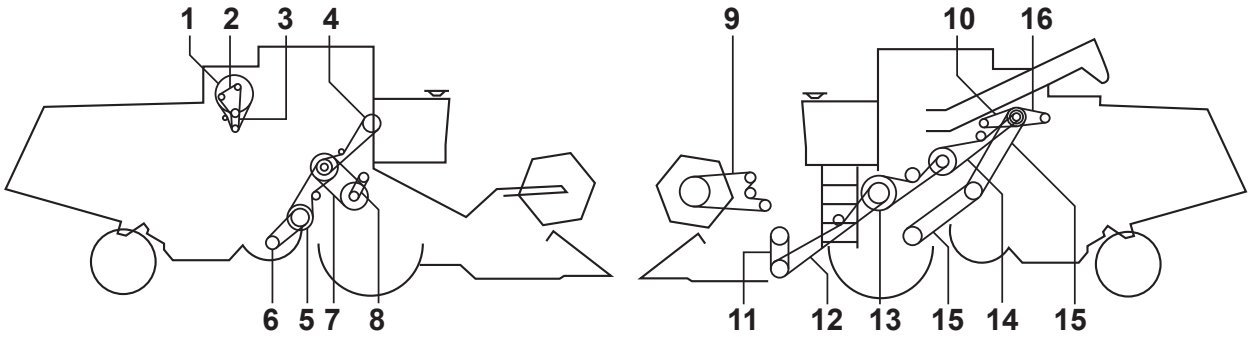

			OE	
1	PURIFY DRIVE	1	Z31283	0283314
2	ALTERNATOR DRIVE	1	T20334	0201092
3	WATERPUMP DRIVE	1	Z32190	0299231
4	ROTARY SCREEN DRIVE	1	Z20743	0202168
5	FAN DRIVE	1	Z34405	0202230
6	FAN DRIVE VARIABLE SPEED	1	Z41178	0809104
7	CYLINDER VARIATOR DRIVE	1	Z20823	0713182
8		1	Z31867	/
9	REEL DRIVE	1	Z20562	0202305
10		1	Z21400	0102137
11	REEL DRIVE VARIABLE SPEED	1	Z36813	0209107
11	REEL DRIVE VARIABLE SPEED	1	Z30692	0210129
12	SICKLE KNIFE DRIVE	1	Z30130	0203295
12	SICKLE KNIFE DRIVE	1	Z39313	0203294
13	STRAW ELEVATOR DRIVE	1	Z32568	0223304
13	STRAW ELEVATOR DRIVE	1	Z21501	0203267
14	MAIN DRIVE	1	Z31191	0339320
15	TRACTION VARI DRIVE	2	Z36376	0211256
16	HYDRAULIC PUMP DRIVE	1	Z30593	0201108

955

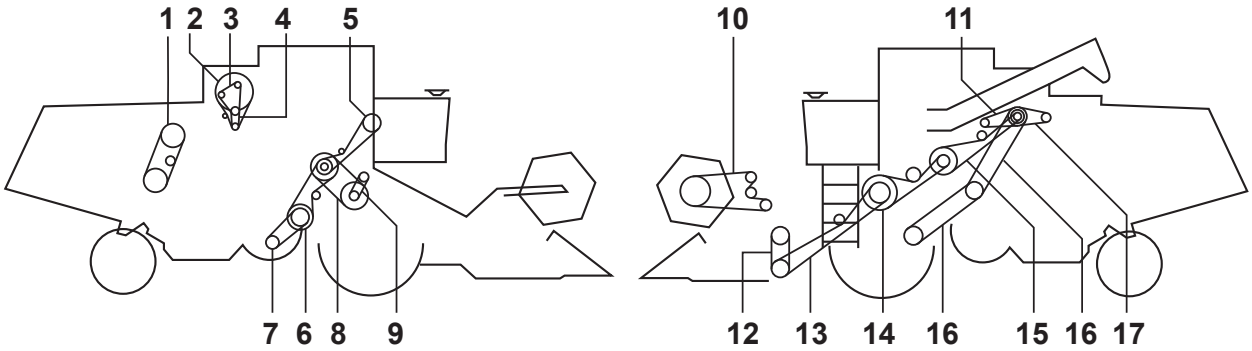

			OE	
1	STRAW WALKER DRIVE	1	Z32883	0300212
2	PURIFY DRIVE	1	Z31283	0283314
3	ALTERNATOR DRIVE	1	AT28030	0273228
4	WATERPUMP DRIVE	1	Z32190	0299231
5	ROTARY SCREEN DRIVE	1	Z20743	0202168
6	FAN DRIVE	1	Z34405	0202230
7	FAN DRIVE VARIABLE SPEED	1	Z41178	0809104
8	CYLINDER VARIATOR DRIVE (SUB FOR Z20823)	1	Z53288	0713182
9		1	Z31867	/
10	REEL DRIVE	1	Z44740	0202300
11		1	Z21400	0102137
12	REEL DRIVE VARIABLE SPEED	1	Z36813	0209107
12	REEL DRIVE VARIABLE SPEED	1	Z30692	0210129
13	SICKLE KNIFE DRIVE (SER. NR. BEFORE 024652 - ORD Z39313)	1	Z30130	0203295
13	SICKLE KNIFE DRIVE (SR. NR 024653 - ... / SUB FOR Z30130)	1	Z39313	0203294
13	SICKLE KNIFE DRIVE	1	Z25670	0203328
14	STRAW ELEVATOR DRIVE	1	Z32568	0223304
14	STRAW ELEVATOR DRIVE	1	Z21501	0203267
15	MAIN DRIVE	1	Z21403	0239320
16	TRACTION VARI DRIVE (BEFORE SER NO 026952)	2	Z34121	0312267
16	TRACTION VARI DRIVE (AFTER SER NO 026953)	2	Z33967	2012282
17	HYDRAULIC PUMP DRIVE	1	Z34828	0201108

965 - 965 HYDRO 4 - 975

			OE	
1	REEL DRIVE	1	Z20562	0202305
2	REEL DRIVE VARIABLE SPEED	1	Z20459	0809104
3	MAIN DRIVE	1	Z33790	0225324 EE-TECH
4	UNLOADING SYSTEM	1	Z33368	0302179
5	HYDRAULIC PUMP DRIVE	1	Z34828	0201108
6	TRACTION DRIVE	2	AZ22914	0203294
8	STRAW ELEVATOR DRIVE	1	Z21500	0203270
10	RADIATOR FAN DRIVE	1	Z24833	0200111
11	PURIFY DRIVE	1	Z31283	0283314
12	COUNTERSHAFT - PURIFY DRIVE	1	Z32190	0299231
13	CYLINDER DRIVE	1	Z20823	0713182
14	FAN DRIVE	1	Z34405	0202230
15	SICKLE KNIFE DRIVE	1	Z30130	0203295

965 - 965 HYDRO - 968 HYDRO

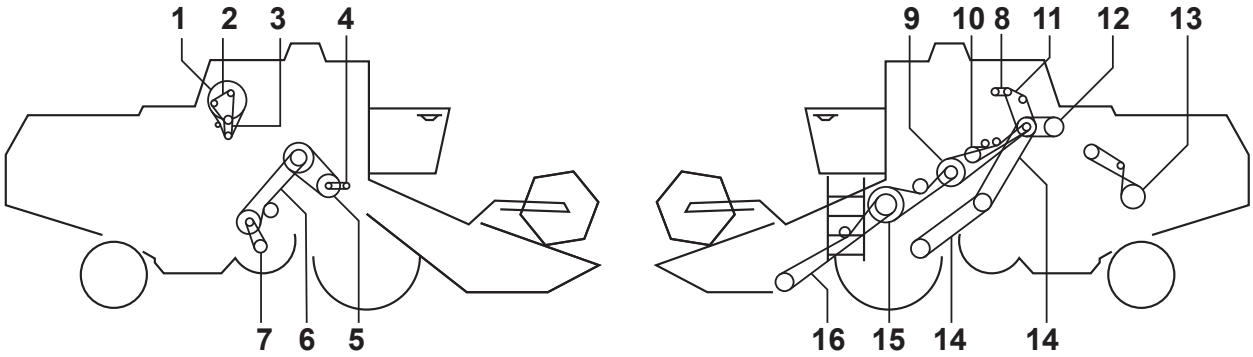

			OE	
1	ALTERNATOR DRIVE	2	AT28030	0273228
2	PURIFY DRIVE	1	Z31283	0283314
3	COUNTERSHAFT - PURIFY DRIVE	1	Z32190	0299231
4		1	Z31867	/
5	CYLINDER DRIVE	1	Z20823	0713182
6	FAN DRIVE	1	Z34405	0202230
7	FAN DRIVE VARIABLE SPEED	1	Z41178	0809104
8		1	CA20514	0172219
9	MAIN DRIVE	1	Z33790	0225324 EE-TECH
10		1	Z47911	2002179
11		1	CA20518	0201090
12	HYDRAULIC PUMP DRIVE	1	Z34828	0201108
13	(SER NR PRIOR 026422) 965 - 965 HYDRO	1	Z33605	0200219
13	(SER NR FOLLOWINF 026423)	1	Z35965	0200204
14	TRACTION DRIVE	1	Z33967	2012282
15	STRAW ELEVATOR DRIVE	1	Z38186	0223304
15	STRAW ELEVATOR DRIVE	1	Z21501	0203267
16	SICKLE KNIFE DRIVE (SER NR PRIOR TO 024652) (965)	1	Z30130	0203295
16	SICKLE KNIFE DRIVE (SER NR FOLLOWING TO 024653) (965)	1	Z36949	0203350
16	SICKLE KNIFE DRIVE (SER NR PRIOR TO 024652) (965)	1	Z39313	0203294
16	SICKLE KNIFE DRIVE (SER NR FOLLOWING TO 024653) (965)	1	Z39314	0203345
16	SICKLE KNIFE DRIVE (SER NR PRIOR TO 024652) (965 HYDRO - 968 HYDRO)	1	Z25670	0203328
16	SICKLE KNIFE DRIVE (SER NR FOLLOWING TO 024653) (965 HYDRO - 968 HYDRO)	1	Z39312	0203328

975 - 975 HYDRO 4

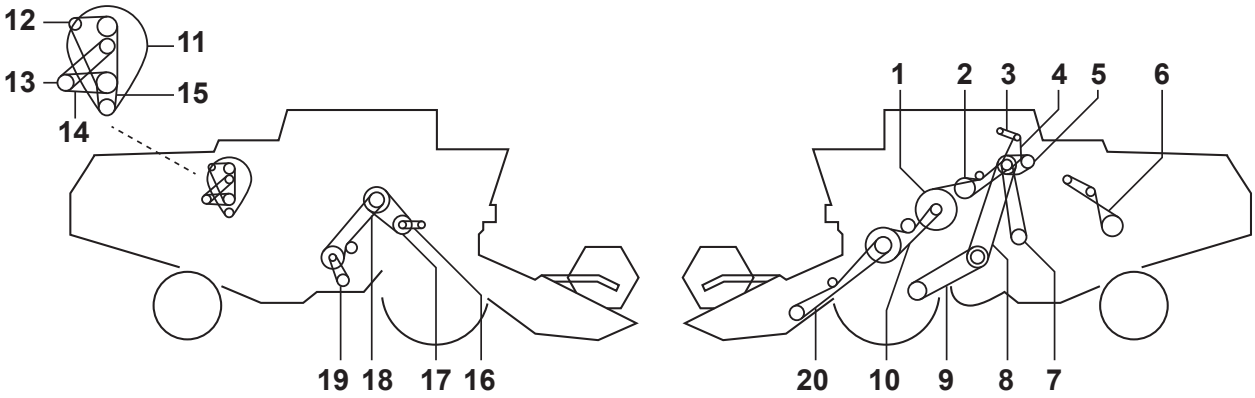

			OE	
1	SEPARATOR AND CLEANING UNIT	1	Z33790	0225324 EE-TECH
2	GRAIN TANK UNLOADING DRIVE	1	Z47911	2002179
3	VENTILATOR DRIVE	1	CA20514	0172219
4	VENTILATOR DRIVE	1	CA20518	0201090
5	HYDRAULIC PUMP DRIVE	1	Z34828	0201108
6	SEPARATOR AND CLEANING UNIT (SER NR FOLLOWING TO 024653)	1	Z35965	0200204
6	SEPARATOR AND CLEANING UNIT (SER NR PRIOR TO 024653)	1	Z33605	0200219
7	MAIN DRIVE (SUB FOR Z37476)	1	Z41728	0224223 EE-TECH
8	(975)	2	AZ22914	0203294
9	(975)	1	Z34099	0213259
10	FEEDER HOUSE	1	Z38186	0223304
10	FEEDER HOUSE	1	Z21501	0203267
11	ALTERNATOR DRIVE (975 HYDRO 4)	2	Z37192	0283316
12	ALTERNATOR DRIVE (SER NR PRIOR TO 389082) (975)	2	AT24833	0372244
12	ENGINE PURIFY DRIVE (975 HYDRO 4)	1	H79235	0272247
12	ENGINE PURIFY DRIVE (SER NR FOLLOWING TO 389083) (975)	1	AR72036	0272247
13	(975 HYDRO 4)	1	Z38149	0372240
14	SEPARATOR AND CLEANING UNIT (975 HYDRO 4)	1	Z38148	0172221
15	(975)	1	Z32190	0299231
15	CYLINDER DRIVE VARIABLE (975 HYDRO)	1	Z37191	0283205
16	SEPARATOR AND CLEANING UNIT	1	Z31867	/
17	CYLINDER DRIVE VARIABLE	1	Z20823	0713182
18	FAN DRIVE	1	Z34405	0202230
19	SEPARATOR AND CLEANING UNIT	1	Z41178	0809104
20	FEEDER HOUSE (SER NR 013568 TO 024652)	1	Z36949	0203350
20	FEEDER HOUSE (SER NR FOLLOWING TO 024653)	1	Z39314	0203345
20	FEEDER HOUSE (SER NR PRIOR TO 013567) (975)	1	Z25670	0203328

985 - 985 HYDRO 4

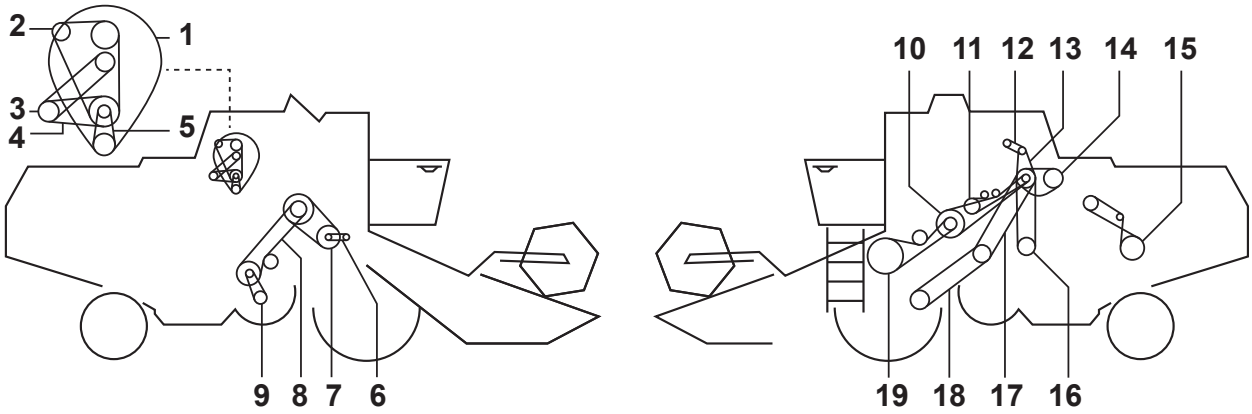

			OE	
1	PURIFY DRIVE (985)	1	Z37192	0283316
1	PURIFY DRIVE	1	Z38704	0283326
2	FAN DRIVE (985)	1	H79235	0272247
3	(985)	1	Z38149	0372240
3	RETURN PURIFY DRIVE	1	Z38703	0172235
4	WATERPUMP DRIVE (985)	1	Z38148	0172221
4		1	Z38702	0172228
5	(985)	1	Z37191	0283205
5		1	Z38692	0299245
6		1	Z39750	/
7	CYLINDER	1	Z37473	0213198
8	FAN DRIVE		Z34405	0202230
9	FAN DRIVE VARIABLE SPEED	1	Z41178	0809104
10	MAIN (PRIOR TO SER NR 018432) (985)	1	Z33790	0225324 EE-TECH
10	MAIN (FOLLOWING TO SER NR 018433)	1	Z38697	2625326 EE-TECH
11	UNLOADING DRIVE (PRIOR SER NR XXXX / SUB FOR Z33368) (985)	1	Z47911	2002179
11	UNLOADING DRIVE (FOLLOWING SER NR XXXX / SUB FOR Z38698)	1	Z47912	0202182
12	ENGINE FAN DRIVE	1	CA20514	0172219
13	HYDRAULIC PUMP DRIVE - ENGINE	1	CA20518	0201090
14	HYDRAULIC PUMP DRIVE	1	Z34828	0201108
15	STRAW DISCHARGE (PRIOR SER NR 026422)	1	Z33605	0200219
15	STRAW DISCHARGE (FOLLOWING SER NR 026423)	1	Z35965	0200204
16	(985 HYDRO)	1	Z41563	0224229 EE-TECH
17	TRACTION (UPPER) (985)	2	AZ22914	0203294
18	TRACTION (LOWER) (985)	1	Z34099	0213259
19	MAIN DRIVE	1	Z38186	0223304

1032 - 1042 - 1052

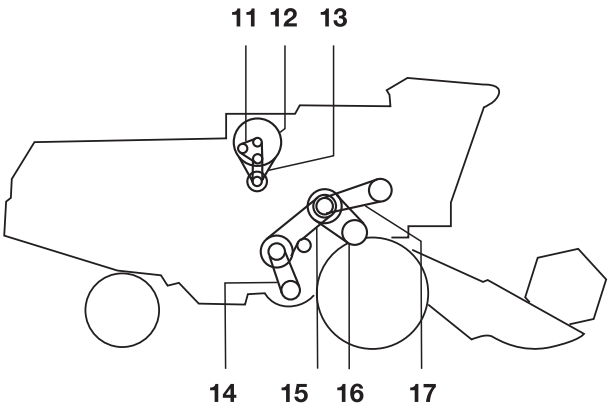

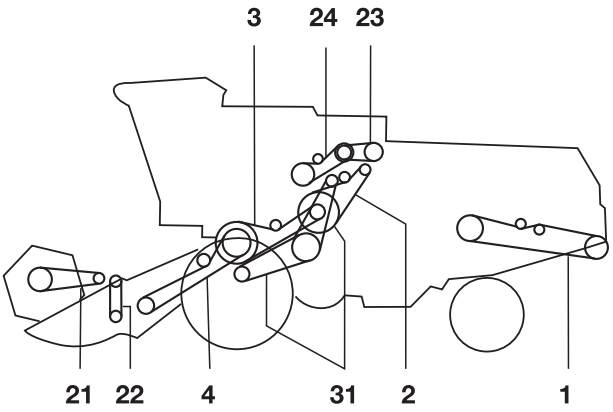

			OE	
1	STRAW WALKER DRIVE	1	Z33774	1401336
2		1	Z46222	0324284
2	CUTTING TABLE DRIVE LEAD-IN	1	Z31191	0339320
3	LEAD-IN DRIVE	1	Z38186	0223304
3	LEAD-IN DRIVE	1	Z20460	0302248
3	LEAD-IN DRIVE	1	Z21501	0203267
4	CUTTING TABLE DRIVE	1	Z23693	0202245
4	CUTTING TABLE DRIVE	1	Z46874	0202275
4	CUTTING TABLE DRIVE	1	Z39313	0203294
11	FAN DRIVE	1	T20334	0201092
12	ROTARY SCREEN DRIVE	1	Z31283	0283314
13	ROTARY SCREEN DRIVE	1	Z32190	0299231
14	FAN DRIVE VARIABLE SPEED	1	Z41178	0809104
15	FAN DRIVE VARIABLE SPEED	1	Z34405	0202230
16	CYLINDER VARIATOR DRIVE	1	Z53288	0713182
17	ELEVATOR DRIVE UNIT	1	Z20743	0202168
21		1	Z44740	0202300
22	REEL DRIVE VARIABLE SPEED	1	Z36813	0209107
23	HYDRAULIC PUMP DRIVE	1	Z42382	1401110
24	DISCHARGE BEATER DRIVE	1	Z43253	0302134
31	MAIN DRIVE	1	Z36120	0210244

1055

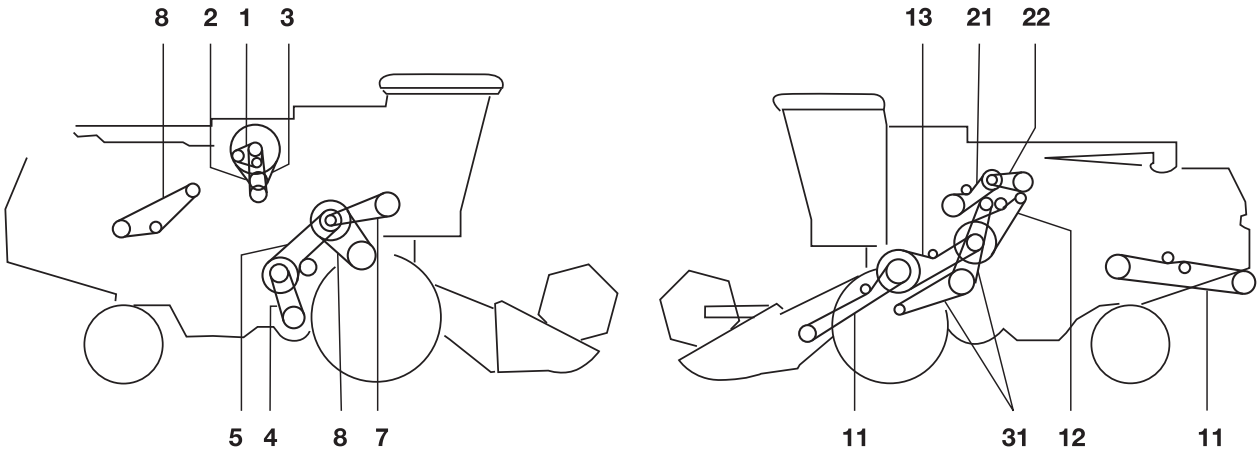

			OE	
1	FAN DRIVE	1	AT28030	0273228
2	ROTARY SCREEN DRIVE	1	Z31283	0283314
3	ROTARY SCREEN DRIVE	1	Z32190	0299231
4	FAN DRIVE VARIABLE SPEED	1	Z41178	0809104
5	FAN DRIVE VARIABLE SPEED	1	Z34405	0202230
6	CYLINDER VARIATOR DRIVE	1	Z53288	0713182
7	ELEVATOR DRIVE UNIT	1	Z20743	0202168
8		1	Z35965	0200204
11	STRAW WALKER DRIVE	1	Z33774	1401336
12		1	Z46222	0324284
12		1	Z21403	0239320
13	LEAD-IN DRIVE	1	Z38186	0223304
13	LEAD-IN DRIVE	1	Z21501	0203267
14	CUTTING TABLE DRIVE	1	Z39312	0203328
14	CUTTING TABLE DRIVE	1	Z39313	0203294
21	DISCHARGE BEATER DRIVE	1	Z43253	0302134
22	HYDRAULIC PUMP DRIVE	1	Z42382	1401110
31	GROUND DRIVE VARIABLE SPEED	2	Z34121	0312267

1065 - 1068 HYDRO (...-041200)

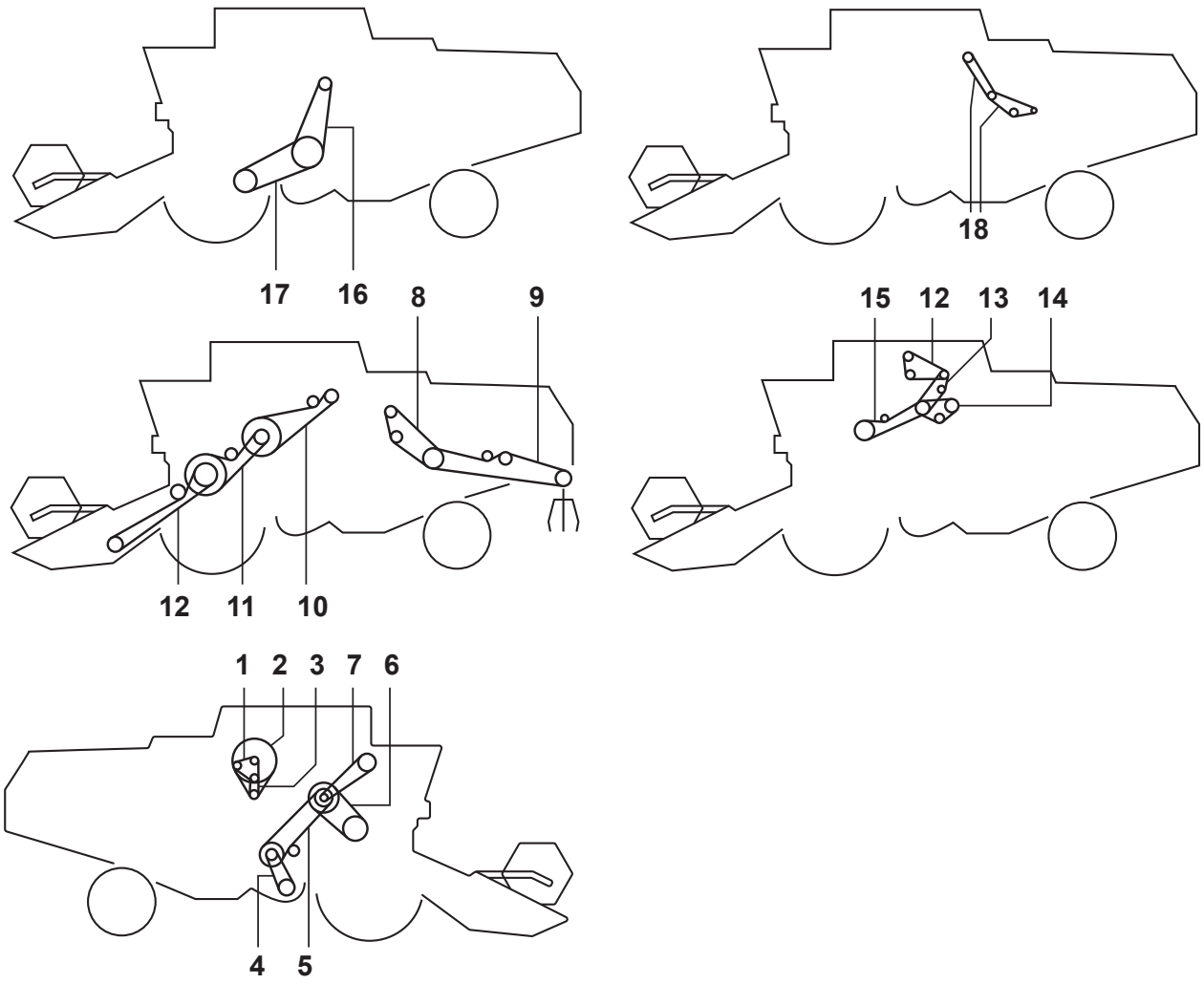

			OE	
1	ALTERNATOR BELT (FOLLOWING SER NO 623931)	2	AR72036	0272247
1	ALTERNATOR BELT (PRIOR TO SER NO 623931)	2	AT28030	0273228
2	ROTARY SCREEN DRIVE (FOLLOWING SER NO 039787)	1	Z34786	0283330
2	ROTARY SCREEN DRIVE (PRIOR TO SER NO 39786)	1	Z31283	0283314
3	COUNTERSHAFT - PURIFY DRIVE	1	Z32190	0299231
4	FAN DRIVE VARIABLE SPEED	1	Z41178	0809104
5	FAN DRIVE VARIABLE SPEED	1	Z34405	0202230
6	CYLINDER VARIATOR DRIVE (SUB FOR Z20823)	1	Z53288	0713182
7	SHAKER SHAFT DRIVE	1	Z35965	0200204
8	STRAW WALKER DRIVE	1	Z33774	1401336
9	CUTTING TABLE DRIVE LEAD-IN	1	Z33790	0225324 EE-TECH
10	LEAD-IN DRIVE	1	Z21501	0203267

1065 - 1068 HYDRO (...-041200) (CONTINUED)

			OE	
10	LEAD-IN DRIVE	1	Z38186	0223304
11	CUTTING TABLE DRIVE (1068 HYDRO)	1	Z39312	0203328
11	CUTTING TABLE DRIVE (1068)	1	Z39313	0203294
11	CUTTING TABLE DRIVE (1068)	1	Z39314	0203345
12	AIR CONDITIONING COMPRESSOR DRIVE (SUB FOR Z41889)	1	Z42756	0217140
13	AIR CONDITIONING COMPRESSOR DRIVE (PRIOR TO SER NO 033563°)	1	Z45482	1401113
13	AIR CONDITIONING COMPRESSOR DRIVE (FOLLOWING SER NO 033562)	1	CA22534	1401113
14	HYDRAULIC PUMP DRIVE	1	Z34828	0201108
15	(SUB FOR Z33368)	1	Z47911	2002179
16	TRACTION (UPPER) (SUB FOR AZ22914) (1065)	2	AZ40077	0203295
16	TRACTION (UPPER) (1068 HYDRO)	2	Z33967	2012282
17	TRACTION (LOWER) (1065)	1	Z34099	0213259
17	TRACTION (LOWER) (1068 HYDRO)	1	Z33967	2012282
18	CONDENSOR ROTARY BLADE	2	Z43863	0283250

1065 - 1068 HYDRO (041201-...)

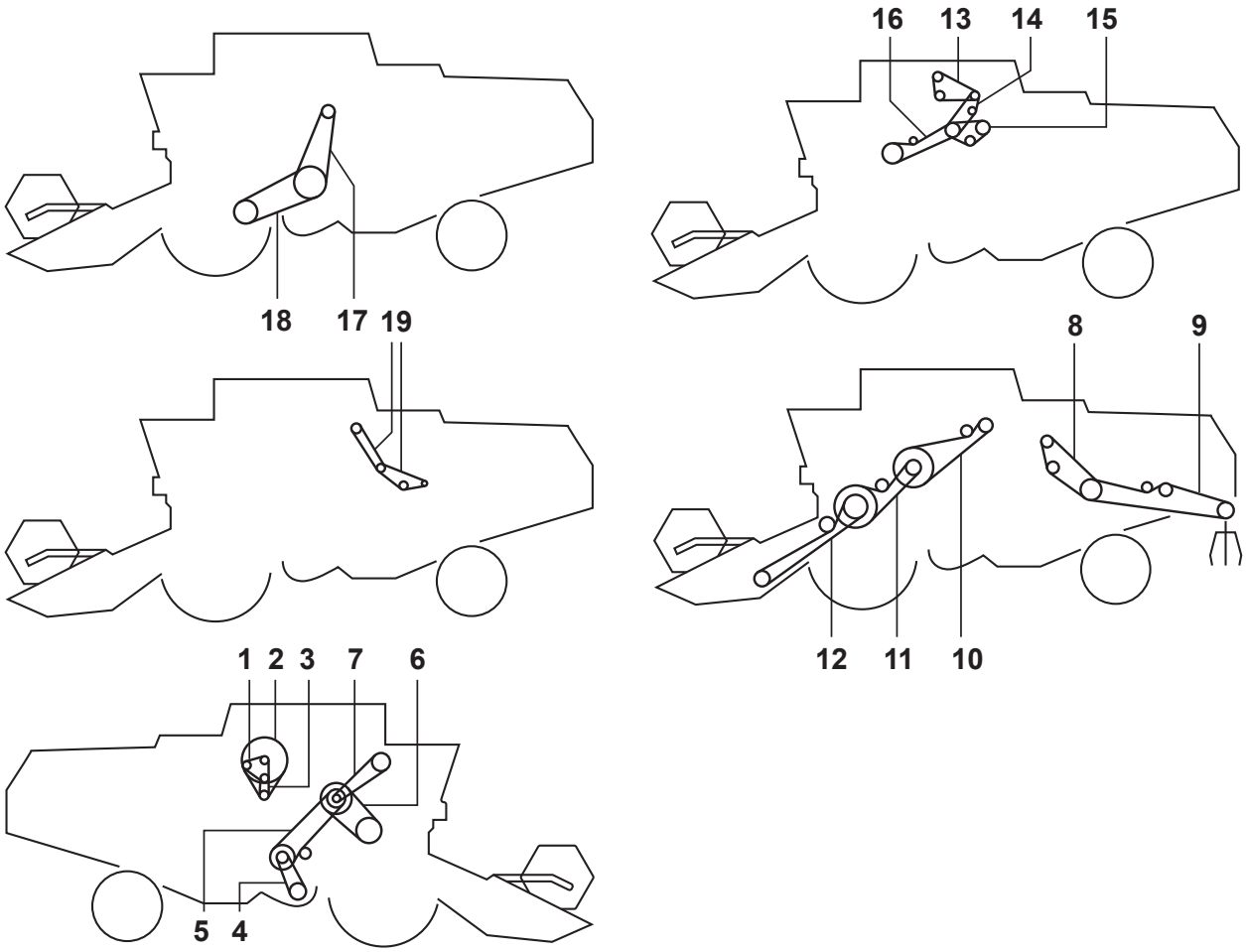

			OE	
1	ALTERNATOR BELT	2	AR72036	0272247
2	ROTARY SCREEN DRIVE	1	Z34786	0283330
3	COUNTERSHAFT - PURIFY DRIVE	1	Z32190	0299231
4	FAN DRIVE VARIABLE SPEED	1	Z41178	0809104
5	FAN DRIVE VARIABLE SPEED	1	Z34405	0202230
6	CYLINDER VARIATOR DRIVE (SUB FOR Z20823)	1	Z53288	0713182
7	(PRIOR TO SER NR 044137)	1	Z45026	0201152
8	SHAKER SHAFT DRIVE	1	Z35965	0200204
9	STRAW WALKER DRIVE	1	Z33774	1401336
10	CUTTING TABLE DRIVE LEAD-IN	1	Z33790	0225324 EE-TECH
11	LEAD-IN DRIVE	1	Z21501	0203267
11	LEAD-IN DRIVE	1	Z38186	0223304
12	CUTTING TABLE DRIVE (1065 HYDRO 4)	1	Z39312	0203328
12	CUTTING TABLE DRIVE (1065)	1	Z39313	0203294

1065 - 1068 HYDRO (041201-...) (CONTINUED)

			OE	
12	CUTTING TABLE DRIVE (1065)	1	Z39314	0203345
13	AIR CONDITIONING COMPRESSOR DRIVE	1	Z42756	0217140
14	AIR CONDITIONING COMPRESSOR DRIVE	1	Z45482	1401113
15	HYDRAULIC PUMP DRIVE	1	Z34828	0201108
16	(SUB FOR Z33368)	1	Z47911	2002179
17	TRACTION (UPPER) (1068 HYDRO)	2	Z33967	2012282
17	TRACTION (UPPER) (SUB FOR AZ22914) (1065)	2	AZ40077	0203295
18	TRACTION (LOWER) (1065)	1	Z34099	0213259
18	TRACTION (LOWER) (1068 HYDRO)	1	Z33967	2012282
19	CONDENSOR ROTARY BLADE	2	Z43863	0283250

1068

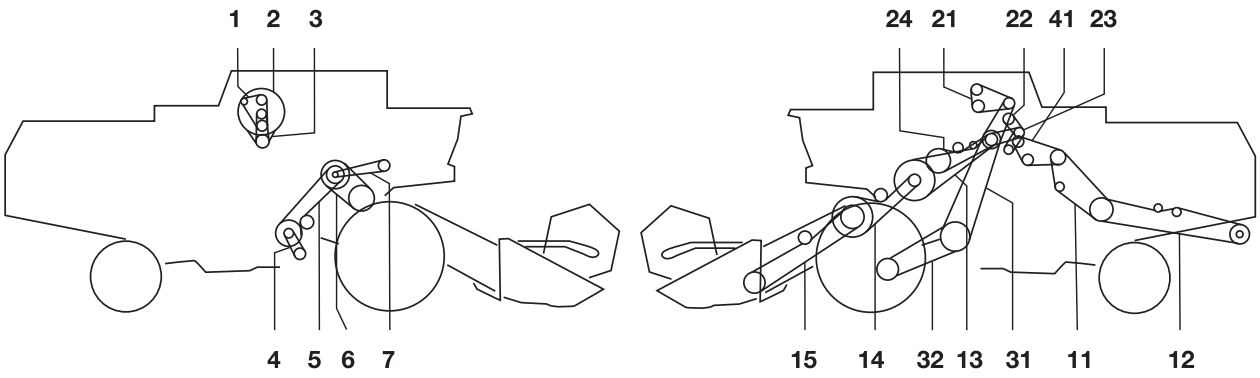

			OE	
1	FAN DRIVE	1	AR72036	0272247
2	ROTARY SCREEN DRIVE	1	Z34786	0283330
3	ROTARY SCREEN DRIVE	1	Z32190	0299231
4	FAN DRIVE VARIABLE SPEED	1	Z41178	0809104
5	FAN DRIVE VARIABLE SPEED	1	Z34405	0202230
6	CYLINDER VARIATOR DRIVE	1	Z53288	0713182
7	TAILINGS ELEVATOR	1	Z45026	0201152
11	SHAKER SHAFT DRIVE	1	Z35965	0200204
12	STRAW WALKER DRIVE	1	Z33774	1401336
13	CUTTING TABLE DRIVE LEAD-IN	1	Z33790	0225324 EE-TECH
14	LEAD-IN DRIVE (MAIZE)	1	Z38186	0223304
14	LEAD-IN DRIVE (GRAIN)	1	Z21501	0203267
15	CUTTING TABLE DRIVE	1	Z39312	0203328
15	CUTTING TABLE DRIVE	1	Z39313	0203294
15	CUTTING TABLE DRIVE	1	Z39314	0203345
21	AIR CONDITIONING COMPRESSOR DRIVE SUB. FOR Z41889	1	Z42756	0217140
22	AIR CONDITIONING COMPRESSOR DRIVE (FROM NR. 33563)	1	Z45482	1401113
23	HYDRAULIC PUMP DRIVE	1	Z34828	0201108
24		1	Z47911	2002179
32	MAIN DRIVE	1	Z34099	0213259
41	CONDENSOR ROTARY BLADE	1	Z43863	0283250

1072 - 1075 - 1075 HYDRO 4

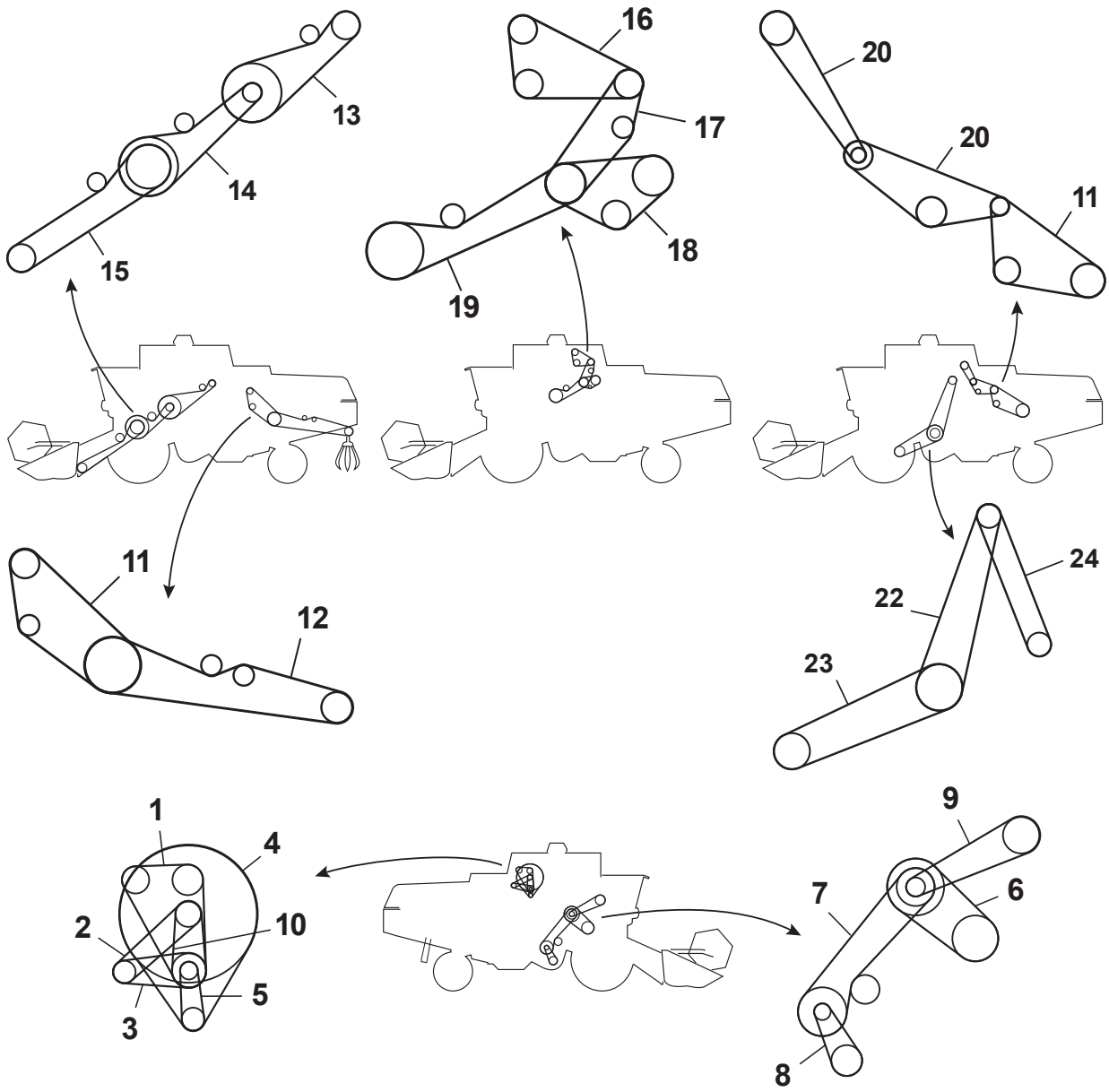

1072 - 1075 - 1075 HYDRO 4 (CONTINUED)

			OE	
1	FAN DRIVE - 1072	1	AT28030	0273228
1	FAN DRIVE - 1075 (TO NR 44386)	1	AR72036	0272247
1	FAN DRIVE - 1075 HYDRO 4 (TO NR. 44386)	1	H79235	0272247
2	1075 HYDRO 4 (TO NR. 44386)	1	Z38149	0372240
3	1075 HYDRO 4 (TO NR. 44386)	1	Z38148	0172221
4	ROTARY SCREEN - 1072-1075	1	Z34786	0283330
4	ROTARY SCREEN - 1075 HYDRO 4 (TO NR. 44386)	1	Z37192	0283316
4	ROTARY SCREEN 1072 (FROM NR. 39787) - 1075-1075 HYDRO 4 (FROM NR. 44387)	1	Z34786	0283330
5	ROTARY SCREEN 1072 - 1075	1	Z32190	0299231
5	ROTARY SCREEN - 1075 HYDRO 4 (FROM NR. 44387)	1	Z45191	0299240
5	ROTARY SCREEN - 1075 HYDRO 4 (TO NR. 44386)	1	Z37191	0283205
6	CYLINDER VARIATOR DRIVE (1072)	1	Z20823	0713182
6	CYLINDER DRIVE - 1075 + 1075 HYDRO 4	1	Z37473	0213198
7	FAN DRIVE VARIABLE SPEED	1	Z34405	0202230
8	FAN DRIVE VARIABLE SPEED	1	Z41178	0809104
9	TAILINGS ELEVATOR 5FROM NR. 44137)	1	Z45026	0201152
10	1075 HYDRO 4 (FROM NR. 44387)	1	Z45192	0272215
11	SHAKER SHAFT DRIVE (TO SER NO 430811) (1072)	1	Z35965	0200204
11	SHAKER SHAFT DRIVE (FROM SER NO 043082) (1072)	1	Z38704	0283326
12	STRAW WALKER DRIVE	1	Z33774	1401336
13		1	Z33790	0225324 EE-TECH
14	MAIN DRIVE - 1075/1075 HYDRO 4 (MAIZE)	1	Z38186	0223304
14	MAIN DRIVE (GRAIN)	1	Z21501	0203267
15	CUTTING TABLE DRIVE - 1072	1	Z39313	0203294
15	CUTTING TABLE DRIVE - 1075/1075 HYDRO 4	1	Z39314	0203345
16	AIR CONDITIONING COMPRESSOR DRIVE	1	Z42756	0217140
17	AIR CONDITIONING COMPRESSOR DRIVE	1	Z45482	1401113
18	HYDRAULIC PUMP DRIVE	1	Z34828	0201108
19	(SUB FOR Z33368)	1	Z47911	2002179
20	CONDENSOR ROTARY BLADE	2	Z43863	0283250
22	(1072)	1	Z33967	2012282
22	SUB FOR AZ22914 (1075)	2	AZ40077	0203295
23	(1072)	1	Z33967	2012282
23	MAIN DRIVE (1075)	1	Z34099	0213259
24	MAIN DRIVE (1075)	1	Z34099	0213259
24	(1075 HYDRO 4)	1	Z41728	0224223 EE-TECH

1085 - 1085 HYDRO 4 (... - 041200)

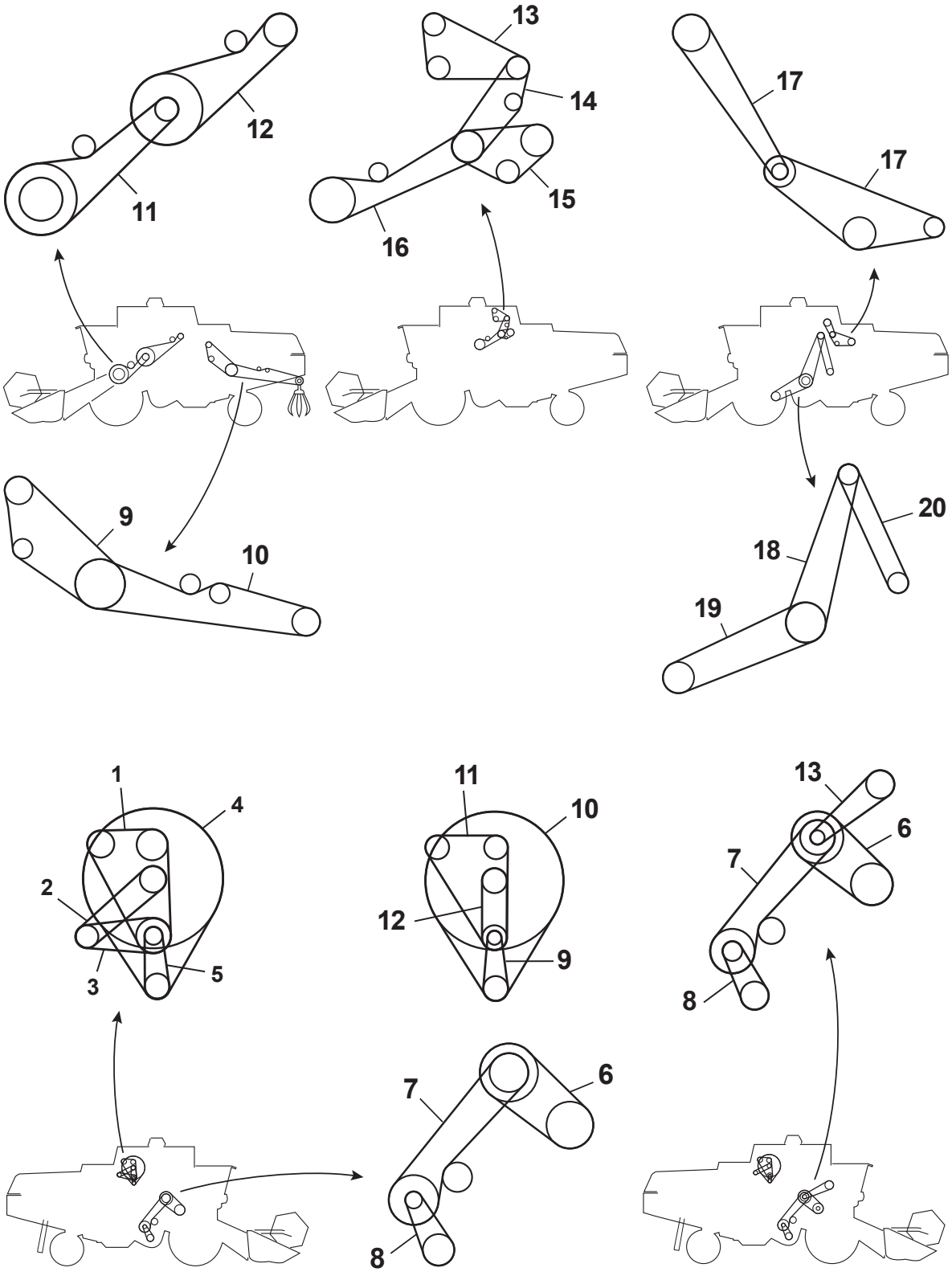

1085 - 1085 HYDRO 4 (... - 041200) (CONTINUED)

			OE	
1	FAN DRIVE - 1085 (TO NR. 44387) - 1085 HYDRO 4	1	H79236	1400119
2	FAN DRIVE (TO NR. 44386)	1	Z38703	0172235
3	FAN DRIVE (TO NR. 44386)	1	Z38702	0172228
4	ROTARY SCREEN - 1085 (TO NR. 44386) - 1085 HYDRO 4	1	Z38704	0283326
5	ROTARY SCREEN - 1085 (TO NR. 44386) - 1085 HYDRO 4	1	Z38692	0299245
6	CYLINDER VARIATOR DRIVE	1	Z37473	0213198
7	FAN DRIVE VARIABLE SPEED	1	Z34405	0202230
8	FAN DRIVE VARIABLE SPEED	1	Z41178	0809104
9	SHAKER SHAFT DRIVE	1	Z35965	0200204
10	STRAW WALKER DRIVE	1	Z33774	1401336
11	CUTTING TABLE DRIVE LEAD-IN - 1085 (TO NR. 44386) -1085 HYDRO 4	1	Z38697	2625326 EE-TECH
12		1	Z38186	0223304
13	AIR CONDITIONING COMPRESSOR DRIVE	1	Z42756	0217140
9	1085 (FROM NR. 44387)	1	Z45191	0299240
10	1085 (FROM NR. 44387)	1	Z34786	0283330
11	1085 (FROM NR. 44387)	1	H79235	0272247
12	1085 (FROM NR. 44387)	1	Z45192	0272215
12	1085 HYDRO 4 (FROM NR. 44387)	1	Z45367	0272218
13	TAILINGS ELEVATOR 5FROM NR. 44137)	1	Z45026	0201152
14	AIR CONDITIONING COMPRESSOR DRIVE (FROM SER NR. 33563)	1	Z42758	1901115
14	AIR CONDITIONING COMPRESSOR DRIVE (TILL SER NR. 33563)	1	Z41932	1601120
15	HYDRAULIC PUMP DRIVE	1	Z34828	0201108
16	UNLOADING DRIVE	1	Z47912	0202182
17	CONDENSOR ROTARY BLADE	1	Z43863	0283250
18		2	AZ40077	0203295
19	MAIN DRIVE (1085)	1	Z34099	0213259
20	MAIN DRIVE (1085 HYDRO 4)	1	Z41563	0224229 EE-TECH

1085 - 1085 HYDRO 4 (041201 - ...)

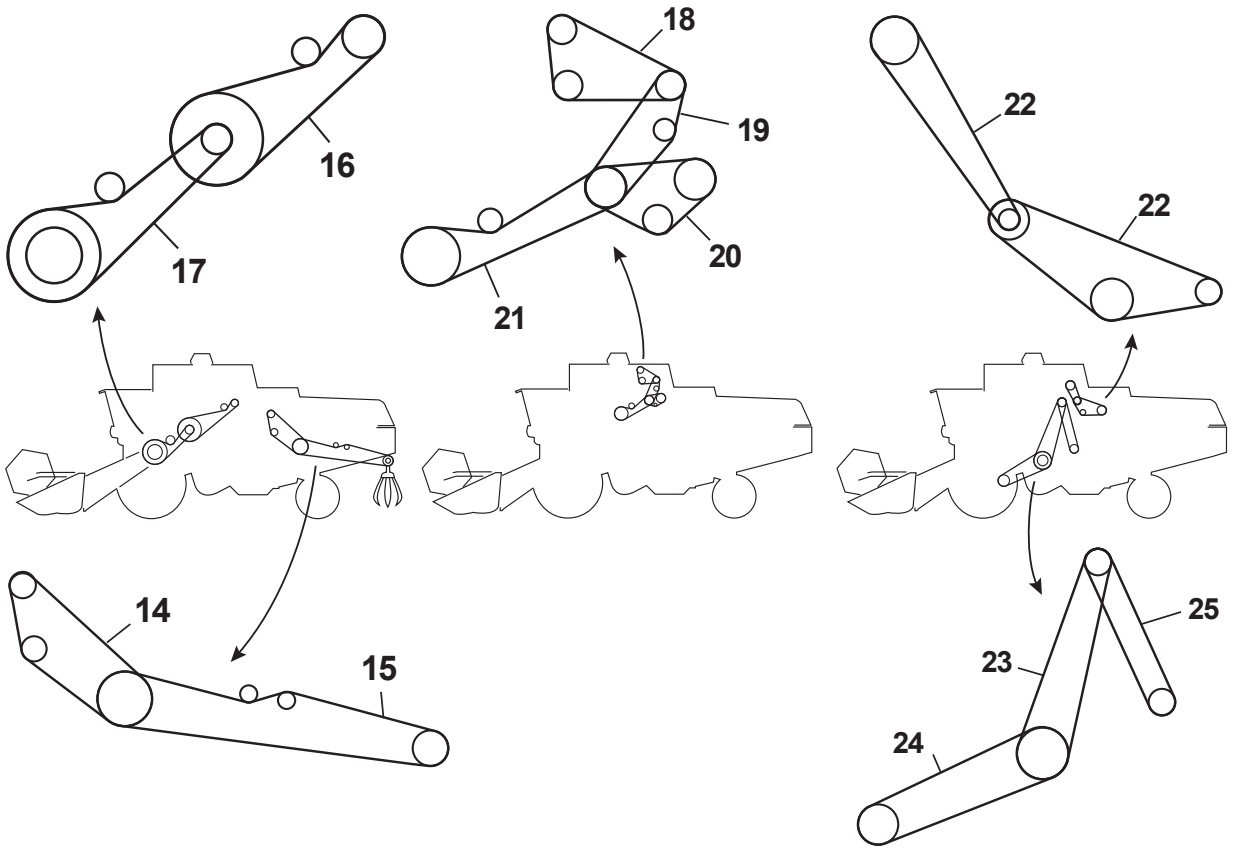

			OE	
1	FAN DRIVE - 1085 (TO NR. 44386) - 1085 HYDRO 4	1	H79236	1400119
2	FAN DRIVE (TO NR. 44386)	1	Z38703	0172235
3	FAN DRIVE (TO NR. 44386)	1	Z38702	0172228
4	ROTARY SCREEN - 1085 (TO NR. 44386) - 1085 HYDRO 4	1	Z38704	0283326
5	ROTARY SCREEN - 1085 (TO NR. 44386) - 1085 HYDRO 4	1	Z38692	0299245
6	CYLINDER VARIATOR DRIVE	1	Z37473	0213198
7	FAN DRIVE VARIABLE SPEED	1	Z34405	0202230
8	FAN DRIVE VARIABLE SPEED	1	Z41178	0809104
9	ROTARY SCREEN - 1085 (FROM NR. 44387)	1	Z45191	0299240
10	ROTARY SCREEN - 1085 (FROM NR. 44387)	1	Z34786	0283330
11	FAN DRIVE - 1085 (FROM NR. 44387)	1	H79235	0272247
12	FAN DRIVE (FROM NR. 44387)	1	Z45192	0272215
12	FAN DRIVE (FROM NR. 44387)	1	Z45367	0272218
13	TAILINGS ELEVATOR (FROM NR. 44137)	1	Z45026	0201152
14	SHAKER SHAFT DRIVE	1	Z35965	0200204
15	STRAW WALKER DRIVE	1	Z33774	1401336
16	CUTTING TABLE DRIVE LEAD-IN - 1085 (TO NR. 44386)	1	Z38697	2625326 EE-TECH
16	CUTTING TABLE DRIVE LEAD-IN - 1085 (FROM NR. 44387)	1	Z33790	0225324 EE-TECH

1085 - 1085 HYDRO 4 (041201 - ...) (CONTINUED)

			OE	
16	CUTTING TABLE DRIVE LEAD-IN - 1085 HYDRO 4	1	Z38697	2625326 EE-TECH
17		1	Z43890	0224306 EE-TECH
18	AIR CONDITIONING COMPRESSOR DRIVE	1	Z42756	0217140
19		1	Z42758	1901115
20	HYDRAULIC PUMP DRIVE	1	Z34828	0201108
21	UNLOADING DRIVE	1	Z47912	0202182
22	CONDENSOR ROTARY BLADE	1	Z43863	0283250
23		2	AZ40077	0203295
24	MAIN DRIVE (1085)	1	Z34099	0213259
25	MAIN DRIVE (1085 HYDRO 4)	1	Z41563	0224229 EE-TECH

1088

			OE	
1	UNLOADING AUGER	1	Z51212	0257283
2		1	H79236	1400119
3	HYDRAULIC PUMP DRIVE	1	Z34828	0201108
4		1	Z42757	1401110
5		1	Z33774	1401336
6		1	Z43888	0123325
7		1	Z43889	0323377 EE-TECH
8	STRAW SPREADER DRIVE	1	Z32041	0301360
9		1	Z46709	0224232 EE-TECH
10		1	Z43890	0224306 EE-TECH
11		1	Z46463	0226328 EE-TECH
12	CLEANING FAN DRIVE	1	Z46365	0210114
13	CYLINDER DRIVE	1	Z44936	0215196
14		1	Z40077	0203295
15	AIR CONDITIONING COMPRESSOR DRIVE	1	Z42756	0217140
16	CONDENSOR ROTARY BLADE	1	Z43863	0283250
17		1	Z38704	0283326

1155 - 1157 - 1158

			OE	
1	1155	1	T20334	0201092
1	1157	1	AT28030	0273228
1	1158	1	AR72036	0272247
2	1155 - 1157	1	Z31283	0283314
2	1158	1	Z38704	0283326
3	ROTARY SCREEN DRIVE	1	Z32190	0299231
4		1	Z20459	0809104
5		1	Z34405	0202230
6	CYLINDER VARIATOR DRIVE	1	Z53288	0713182
7		1	Z20743	0202168
8	SHAKER SHAFT DRIVE	1	Z35965	0200204
9		1	Z33774	1401336
10		1	Z46222	0324284
11	LEAD-IN DRIVE	1	Z21501	0203267
12	CUTTING TABLE DRIVE	1	Z39313	0203294
12		1	Z39312	0203328
13		2	Z34121	0312267
14		1	Z43253	0302134
15		1	Z42382	1401110

1166 - 1166 HYDRO 4

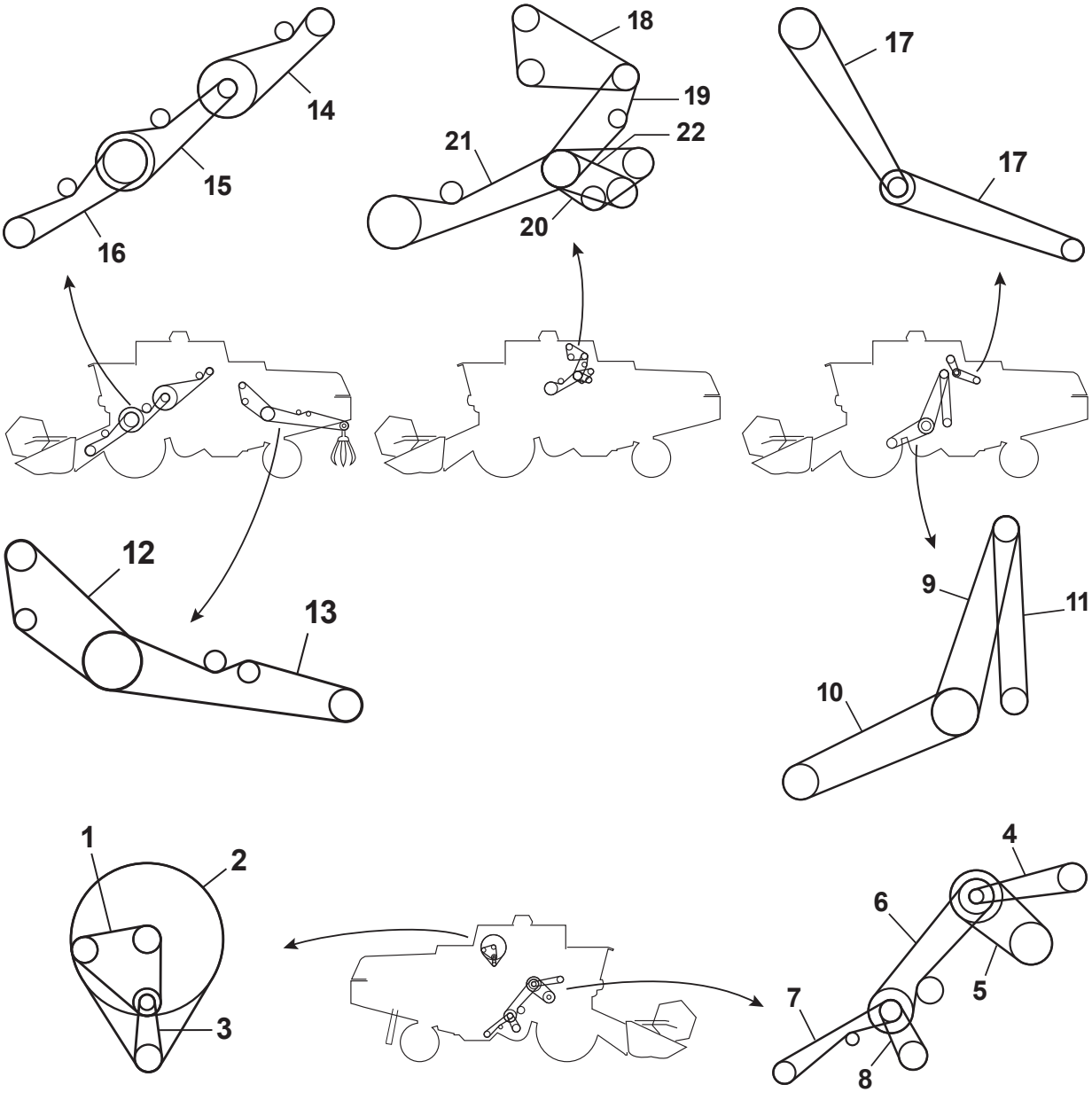

1166 - 1166 HYDRO 4 (CONTINUED)

			OE	
1	ALTERNATOR BELT	1	AR72036	0272247
2	1166	1	Z46764	0283324
2	ROTARY SCREEN (1166 HYDRO 4)	1	Z34786	0283330
3	ROTARY SCREEN DRIVE	1	Z32190	0299231
4	TAILINGS ELEVATOR	1	Z45026	0201152
5	CYLINDER VARIATOR DRIVE	1	Z53288	0713182
5	CYLINDER DRIVE	1	Z44936	0215196
6	SEPARATOR DRIVE	1	Z46366	0302241
7	UNLOADING DRIVE	1	Z47912	0202182
8	CLEANING FAN DRIVE	1	Z46365	0210114
9	1166 - FOR POSI-TORQUE GROUND SPEED DRIVE	2	AZ37807	0203290
10	MAIN DRIVE (1166)	1	Z34099	0213259
11	1166 HYDRO 4	1	Z53290	0224247 EE-TECH
12	SHAKER SHAFT DRIVE	1	Z35965	0200204
13	STRAW SPREADER DRIVE	1	Z32041	0301360
14		1	Z33790	0225324 EE-TECH
15		1	Z38186	0223304
15	LEAD-IN DRIVE	1	Z21501	0203267
16	CUTTING TABLE DRIVE	1	Z39313	0203294
16	WITH LONG FEEDER HOUSE	1	Z39314	0203345
17	CONDENSOR ROTARY BLADE (1166)	2	Z43863	0283250
18	AIR CONDITIONING COMPRESSOR DRIVE WITH SEPARATE CONDENSER COOLING (1166)	1	Z42756	0217140
19	AIR CONDITIONING COMPRESSOR DRIVE (1166)	1	Z45482	1401113
20	HYDRAULIC PUMP DRIVE	1	Z34828	0201108
21	UNLOADING AUGER	1	Z51212	0257283
22	AIR CONDITIONING COMPRESSOR DRIVE	1	Z46759	0272218

1169 - 1169 HYDRO 4

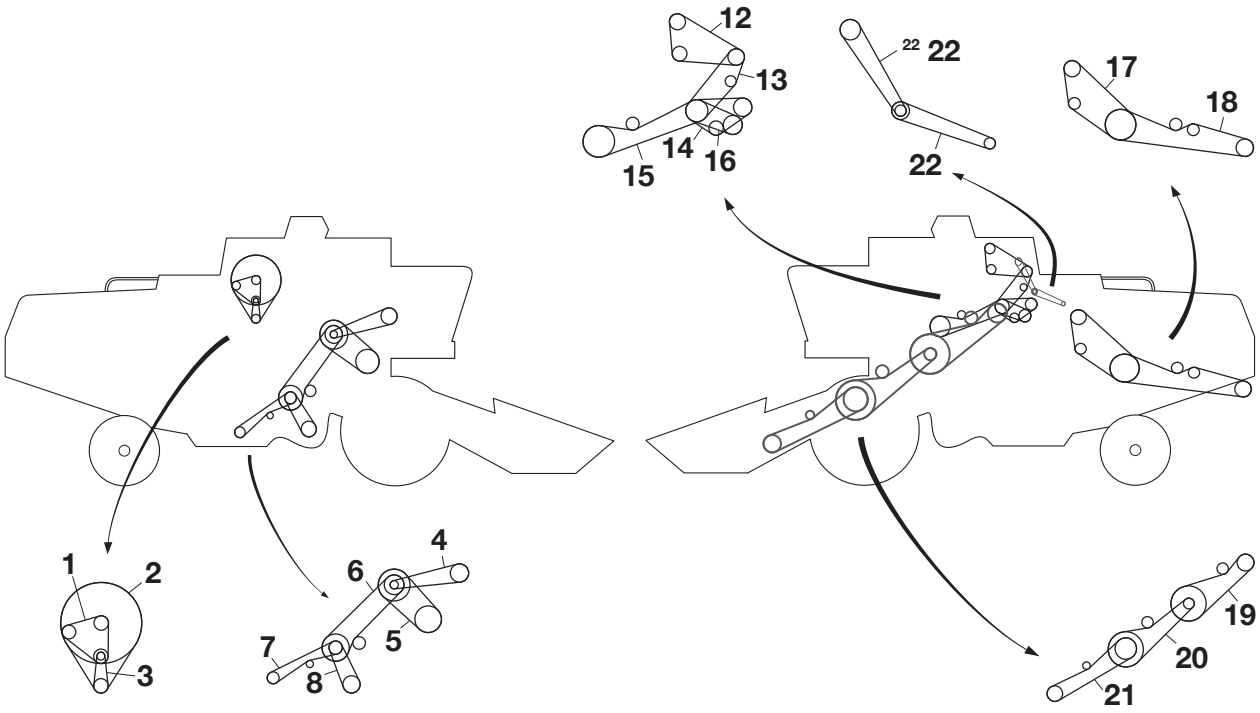

			OE	
1	ALTERNATOR BELT	1	AR72036	0272247
2		1	Z46764	0283324
2		1	Z34786	0283330
3	ROTARY SCREEN DRIVE	1	Z32190	0299231
4	TAILINGS ELEVATOR	1	Z45026	0201152
5	CYLINDER VARIATOR DRIVE (SUB FOR Z20823)	1	Z53288	0713182
6	SEPARATOR DRIVE	1	Z46366	0302241
7	UNLOADING DRIVE	1	Z47912	0202182
8	CLEANING FAN DRIVE	1	Z46365	0210114
11	1169 HYDRO 4	1	Z53290	0224247 EE-TECH
12	AIR CONDITIONING COMPRESSOR DRIVE WITH SEPARATE CONDENSER COOLING (1169)	1	Z42756	0217140
13	AIR CONDITIONING COMPRESSOR DRIVE (1169)	1	Z45482	1401113
14	HYDRAULIC PUMP DRIVE	1	Z34828	0201108
15	UNLOADING AUGER	1	Z51212	0257283
16	AIR CONDITIONING COMPRESSOR DRIVE	1	Z46759	0272218
17	SHAKER SHAFT DRIVE	1	Z35965	0200204
18	STRAW SPREADER DRIVE	1	Z32041	0301360
19		1	Z33790	0225324 EE-TECH
20	LEAD-IN DRIVE (GRAIN)	1	Z38186	0223304
20	LEAD-IN DRIVE (MAIZE)	1	Z21501	0203267
21		1	Z39312	0203328
22	CONDENSOR ROTARY BLADE	1	Z43863	0283250

1170

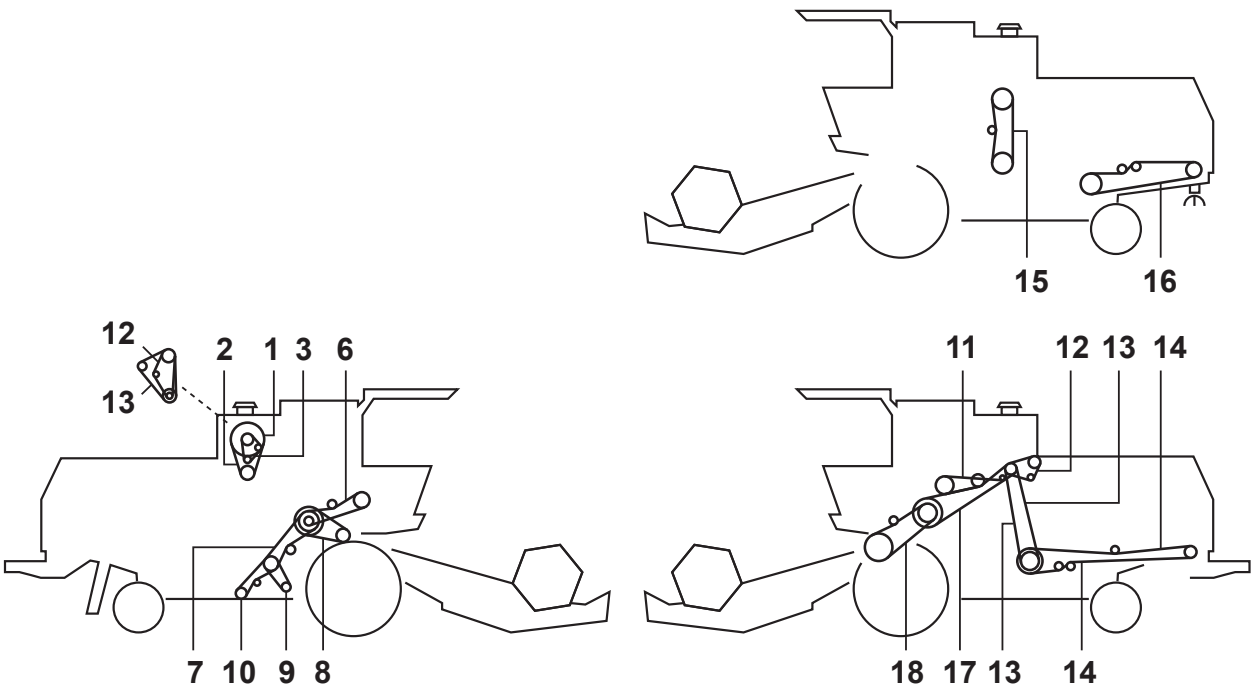

			OE	
1		1	CQ03265	0302179
2		1	CQ17755	0201112
3		1	CQ34345	2623278
4		1	CQ28344	0223563
5		1	Z46709	0224232 EE-TECH
6		1	CQ03478	0201343
7		1	Z46463	0226328 EE-TECH
8		1	Z43890	0224306 EE-TECH
9		1	CQ08239	0300201
11		1	S17044	☎
12		1	CQ03492	0401111
13		1	R123451	0285280
14	TAILINGS ELEVATOR	1	Z45026	0201152
15		1	SA00601	1602240
16	CYLINDER DRIVE	1	Z44936	0215196
17		1	Z41178	0809104
18	SER NR TILL083094	1	CQ13837	0502165
18	SER NR FROM 038095	1	CQ31965	0223204

1174 - 1174 HYDRO 4

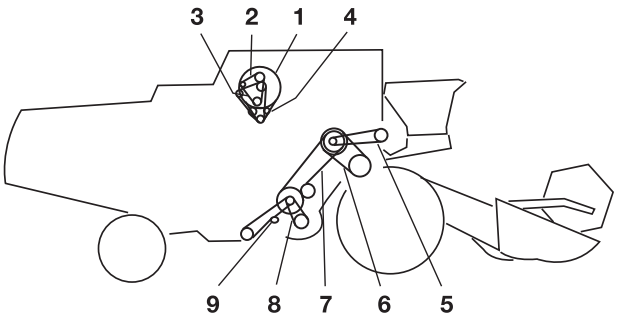

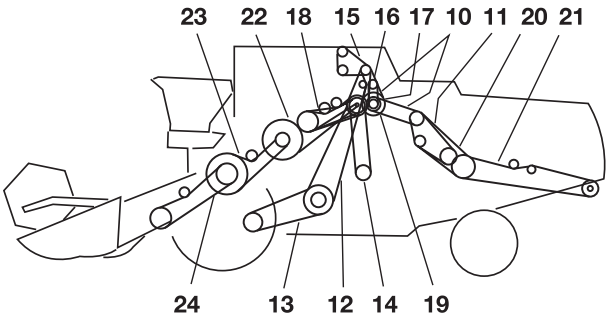

			OE	
1	1174 ONLY - AC WITH INTEGRATED CONDENSER COOLING	1	Z46764	0283324
1	AIR CONDITIONING WITH SEPARATE CONDENSER COOLING	1	Z38704	0283326
2	ALTERNATOR BELT	1	AR72036	0272247
3	1174 HYDRO 4 ONLY	1	Z45367	0272218
4		1	Z32190	0299231
4		1	Z38692	0299245
5	TAILINGS ELEVATOR	1	Z45026	0201152
6		1	Z20823	0713182
6	CYLINDER VARIATOR DRIVE (SUB FOR Z20823)	1	Z53288	0713182
6	CYLINDER DRIVE	1	Z44936	0215196
7	SEPARATOR DRIVE	1	Z46366	0302241
8	CLEANING FAN DRIVE	1	Z46365	0210114
9	UNLOADING DRIVE	1	Z47912	0202182
10	CONDENSOR ROTARY BLADE	1	Z43863	0283250
11		1	Z38704	0283326
12	1174 - FOR POSI-TORQUE GROUND SPEED DRIVE	2	AZ37807	0203290
13	1174 - FOR POSI-TORQUE GROUND SPEED DRIVE	1	Z34099	0213259
14	1174 HYDRO 4 ONLY	1	Z41728	0224223 EE-TECH
15	AIR CONDITIONING WITH SEPARATE CONDENSER COOLING	1	Z42756	0217140
16	AIR CONDITIONING COMPRESSOR DRIVE	1	Z45482	1401113
17	HYDRAULIC PUMP DRIVE	1	Z34828	0201108
18	UNLOADING AUGER	1	Z51212	0257283
19	AIR CONDITIONING WITH INTEGRATED CONDENSER COOLING	1	Z46759	0272218
20	SHAKER SHAFT DRIVE	1	Z35965	0200204
21	STRAW SPREADER DRIVE	1	Z32041	0301360
22		1	Z33790	0225324 EE-TECH
23		1	Z38186	0223304
23	LEAD-IN DRIVE	1	Z21501	0203267
24	CUTTING TABLE DRIVE	1	Z39313	0203294
24	FOR FEEDER CONVEYOR LONG	1	Z39314	0203345

1177 - 1177 HYDRO 4

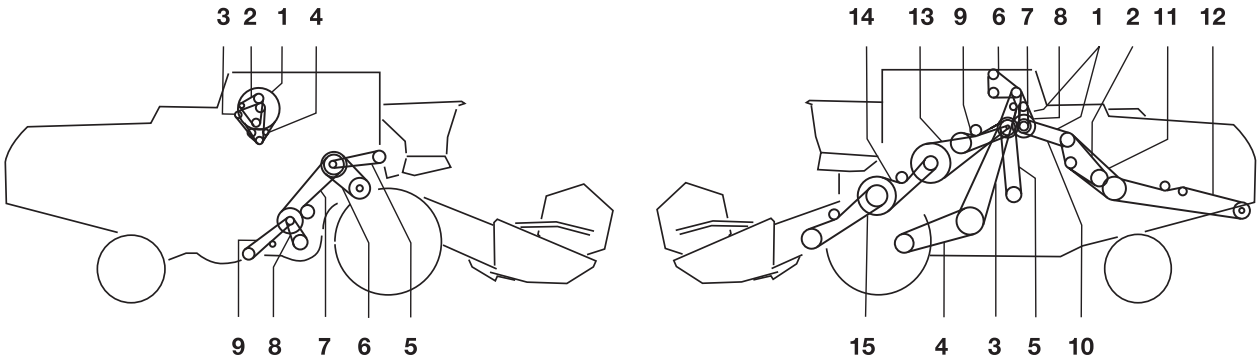

			OE	
1	1177 ONLY- AC WITH INTEGRATED CONDENSER COOLING	1	Z46764	0283324
2		1	H79236	1400119
2	1177 ONLY	1	AR72036	0272247
3		1	Z45367	0272218
4		1	Z38692	0299245
5	TAILINGS ELEVATOR	1	Z45026	0201152
6	CYLINDER DRIVE	1	Z44936	0215196
7	SEPARATOR DRIVE	1	Z46366	0302241
8	CLEANING FAN DRIVE	1	Z46365	0210114
9	UNLOADING DRIVE	1	Z47912	0202182
10	SHAKER SHAFT DRIVE	1	Z35965	0200204
11	STRAW SPREADER DRIVE	1	Z32041	0301360
12	1177 ONLY	1	Z33790	0225324 EE-TECH
12	1174 HYDRO 4 ONLY	1	Z58697	2025401
13		1	Z38186	0223304
14		1	Z39314	0203345
15	AIR CONDITIONING WITH SEPARATE CONDENSER COOLING	1	Z42756	0217140
16	1177 HYDRO 4	1	Z42757	1401110
16	AIR CONDITIONING COMPRESSOR DRIVE (1177)	1	Z45482	1401113
17	HYDRAULIC PUMP DRIVE	1	Z34828	0201108
18	UNLOADING AUGER	1	Z51212	0257283
19	1177 ONLY- AC WITH INTEGRATED CONDENSER COOLING	1	Z46759	0272218
20	1177 - FOR POSI-TORQUE GROUND SPEED DRIVE	2	AZ37807	0203290
21	MAIN DRIVE (1177)	1	Z34099	0213259
22	1177 HYDRO 4	1	Z46709	0224232 EE-TECH
23	CONDENSOR ROTARY BLADE	1	Z43863	0283250
24	WITHOUT CROOS SHAKER	1	Z38704	0283326

1188 - 1188 HYDRO 4

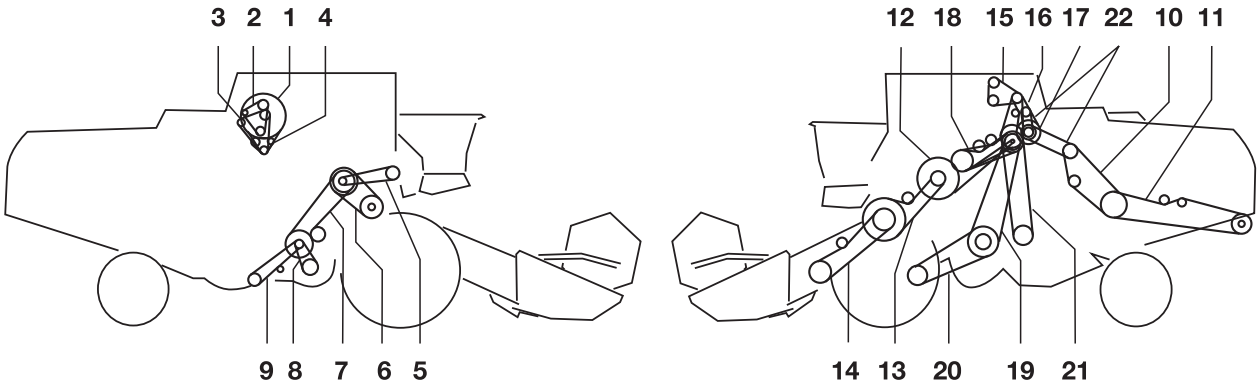

			OE	
0		1	Z51707	0323282
1		1	Z38704	0283326
2		1	H79236	1400119
3		1	Z45367	0272218
4		1	Z38692	0299245
5	TAILINGS ELEVATOR	1	Z45026	0201152
6	CYLINDER DRIVE	1	Z44936	0215196
7	SEPARATOR DRIVE	1	Z46366	0302241
8	CLEANING FAN DRIVE	1	Z46365	0210114
9	UNLOADING DRIVE	1	Z47912	0202182
10	SHAKER SHAFT DRIVE	1	Z35965	0200204
11	STRAW SPREADER DRIVE	1	Z32041	0301360
12		1	Z46463	0226328 EE-TECH
13		1	Z43890	0224306 EE-TECH
14		1	Z43888	0123325
14	FOR FEEDER CONVEYOR LONG	1	Z43889	0323377 EE-TECH
15	AIR CONDITIONING WITH SEPARATE CONDENSER COOLING	1	Z42756	0217140
17	HYDRAULIC PUMP DRIVE	1	Z34828	0201108
18	UNLOADING AUGER	1	Z51212	0257283
20	MAIN DRIVE (1188)	1	Z34099	0213259
22	CONDENSOR ROTARY BLADE	1	Z43863	0283250

1450 CWS/WTS - 1550 CWS/WTS

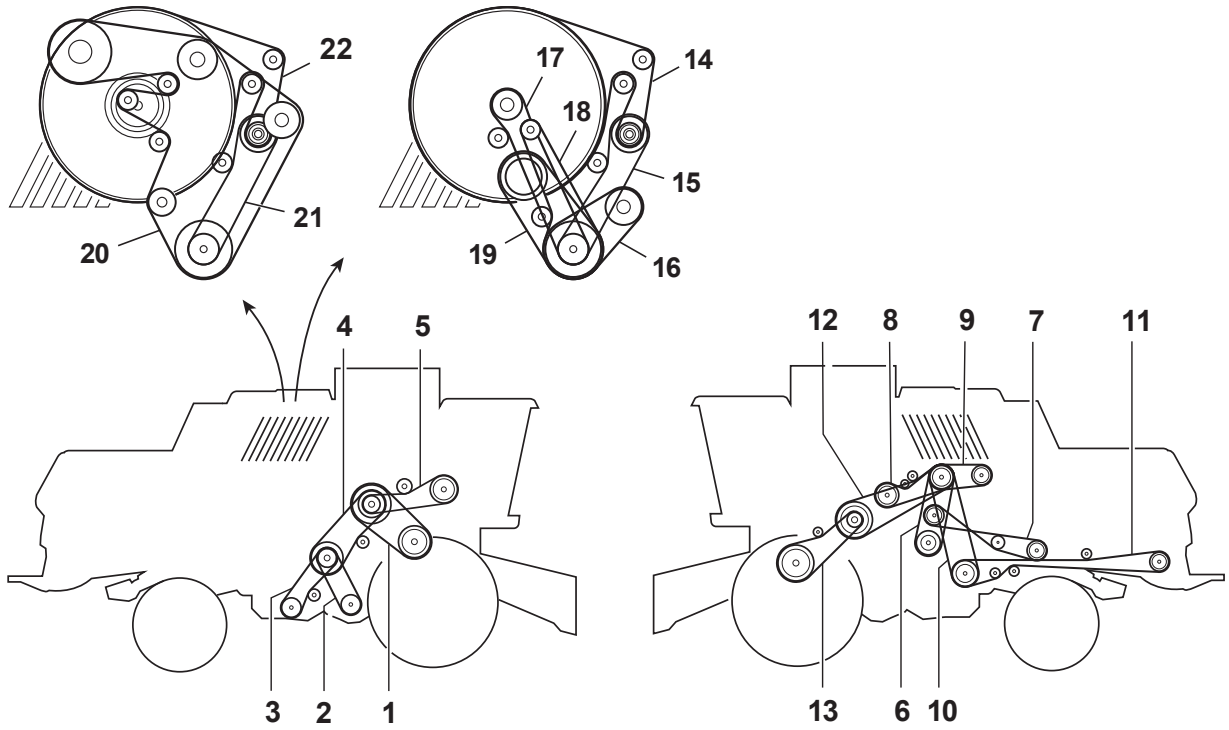

			OE	
1	CYLINDER DRIVE	1	Z44936	0215196
2		1	Z41178	0809104
3		1	CQ31965	0223204
4		1	SA00601	1602240
5	TAILINGS ELEVATOR	1	Z45026	0201152
6	WTS SERIES	1	Z46709	0224232 EE-TECH
7	WTS SERIES	1	CQ42150	2602213
8		1	CQ03265	0302179
9		1	CQ17755	0201112
10		1	CQ35426	0224292 EE-TECH
11		1	CQ39824	0223561
12		1	Z46463	0226328 EE-TECH
13		1	Z43890	0224306 EE-TECH
14	(SER NR TO 070000)	1	H145158	1400286
15		1	CQ37755	1472236
16		1	M82461	0272210
17		1	CQ40222	0223185
18		1	CQ42066	0285276
19		1	M45862	0172225
20	(SUB CQ65230)	1	CQ71839	☎
20	(SUB CQ68171)	1	CQ71838	☎
21		1	CQ72707	1400264
22		1	CQ61084	1400264

1470

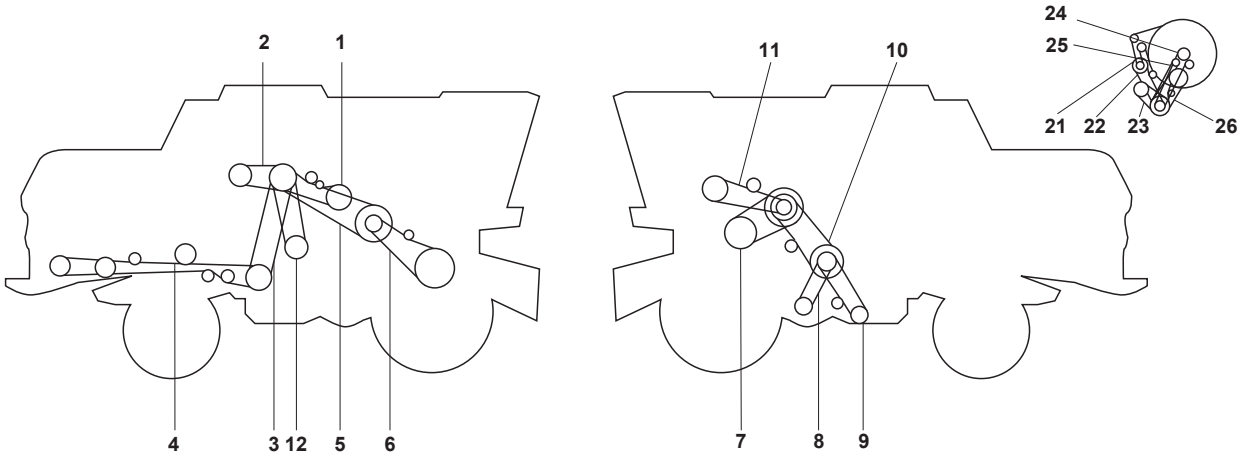

			OE	
1		1	CQ03265	0302179
2		1	CQ74130	1118081
3		1	CQ35426	0224292 EE-TECH
4		1	CQ39824	0223561
4		1	CQ35559	0223549
5		1	Z46463	0226328 EE-TECH
6		1	Z43890	0224306 EE-TECH
7	CYLINDER DRIVE	1	Z44936	0215196
8	FAN DRIVE	1	Z41178	0809104
9		1	CQ31965	0223204
10		1	SA00601	1602240
11		1	Z45026	0201152
12		1	Z46709	0224232 EE-TECH
21	COOLING FAN	1	H145158	1400286
22		1	CQ37755	1472236
23		1	M82461	0272210
24		1	CQ40222	0223185
25		1	CQ45617	1485268
26		1	M45862	0172225

2054 - 2056 - 2058

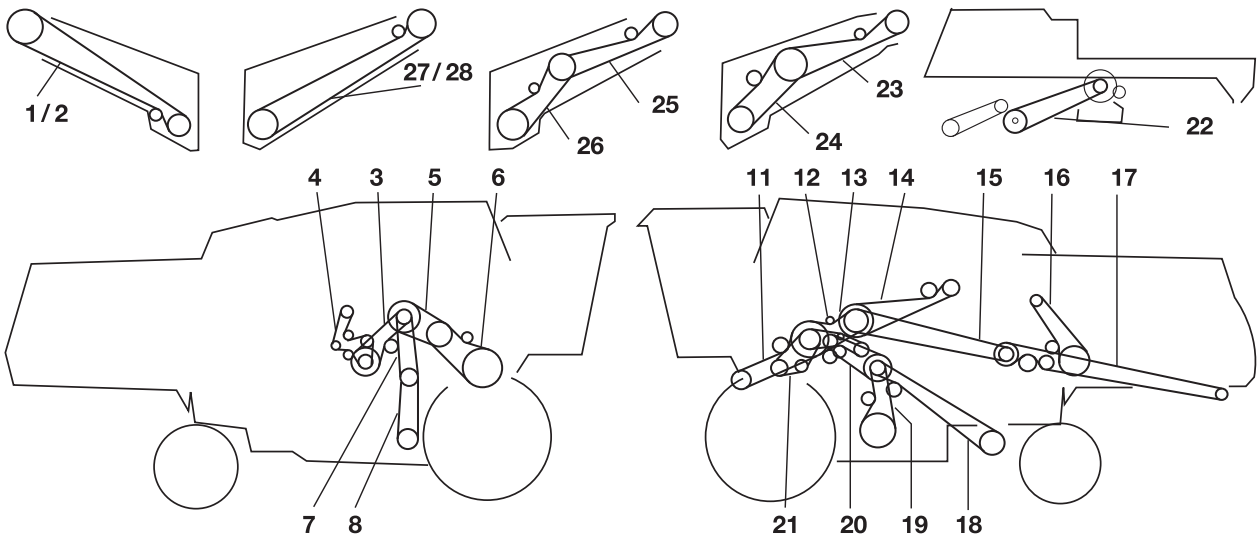

			OE	
1		1	Z54406	0203350
1		1	Z55801	0202348
1		1	Z61151	0227281
2		1	Z58752	1902354
2		1	Z59419	0206356
3		1	Z59556	0702199
3		1	Z63005	0702212
4		1	Z59557	0202230
5	CYLINDER DRIVE	1	Z44936	0215196
6		1	Z61858	0225266
7		1	Z62110	0210183
8		1	Z62111	0210207
11		1	Z59344	0203236
12		1	Z57084	2301174
13		1	Z64912	0227201
13		1	Z61150	0227241
13		1	Z52909	0203194
14		1	Z61857	0240348
15		1	Z59286	0224406 EE-TECH
16		1	Z59114	0301211
17		1	Z59342	0223543
18		1	Z60135	0201333
19		1	Z59322	1902206
20		1	Z56959	0203218
21		1	Z56421	0203155
22		1	Z48212	0227315
23		1	Z61152	0227286
23		1	Z60931	0227294
24		1	Z61154	0211205

2054 - 2056 - 2058 (CONTINUED)

			OE	
24		1	Z62211	0211206
25		1	Z61152	0227286
25		1	Z60931	0227294
25		1	Z54807	0203238
25		1	Z58751	0203245
26		1	Z61153	0227234
26		1	Z61827	0227241
26		1	Z62213	0203194
26		1	Z55459	0203188
27		1	Z61164	0227395
27		1	Z62551	0227402
27		1	Z54406	0203350
27		1	Z62214	0203364
28		1	Z60930	0227402
28		1	Z62552	0227408

2064 - 2066

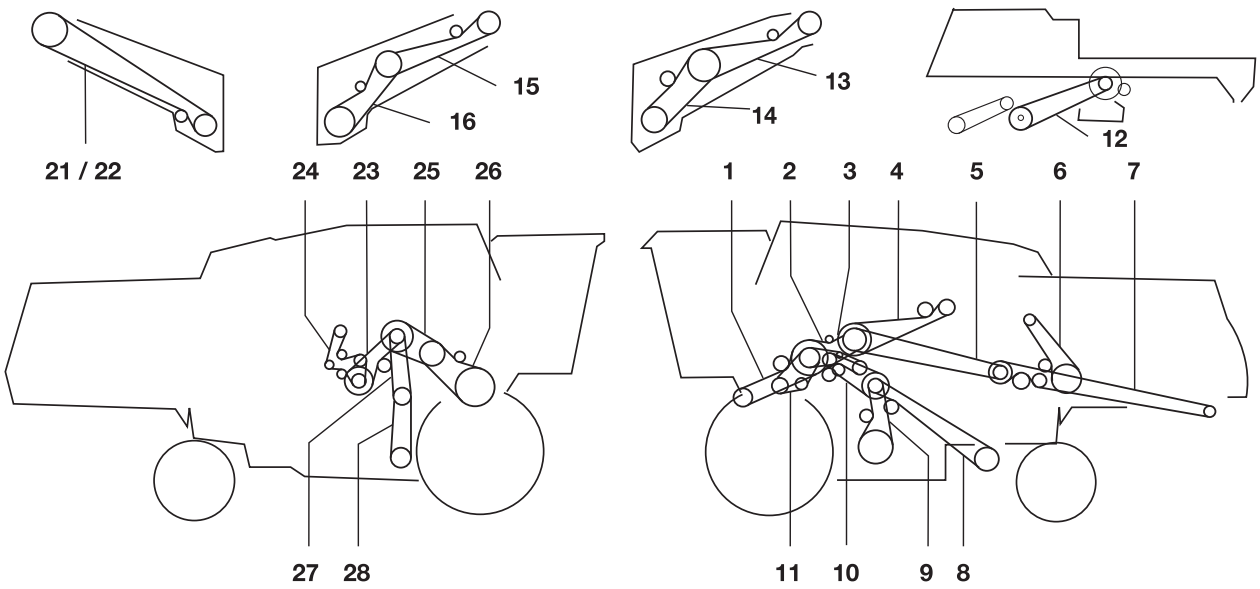

			OE	
1		1	Z59344	0203236
1		1	Z61151	0227281
2		1	Z57084	2301174
3		1	Z64912	0227201
3		1	Z61150	0227241
3		1	Z52909	0203194
4		1	Z61857	0240348
5		1	Z59286	0224406 EE-TECH
6		1	Z59114	0301211
7		1	Z59342	0223543
8		1	Z60135	0201333
9		1	Z56421	0203155
10		1	Z56959	0203218
11		1	Z59322	1902206
12		1	Z48212	0227315
12		1	Z59419	0206356
13		1	Z61152	0227286
13		1	Z60931	0227294
14		1	Z61154	0211205
14		1	Z62211	0211206
15		1	Z61152	0227286
15		1	Z60931	0227294
15		1	Z54807	0203238
15		1	Z58751	0203245
16		1	Z61153	0227234
16		1	Z61827	0227241
16		1	Z62213	0203194

2064 - 2066 (CONTINUED)

			OE	Gates
16		1	Z55459	0203188
21		1	Z55801	0202348
21		1	Z54406	0203350
22		1	Z58752	1902354
22		1	Z59419	0206356
23		1	Z59556	0702199
23		1	Z63005	0702212
24		1	Z59557	0202230
25	CYLINDER DRIVE	1	Z44936	0215196
26		1	Z61858	0225266
27		1	Z62110	0210183
28		1	Z62111	0210207

2250

			OE	Gates
1	ALTERNATOR AND FAN DRIVE	1	H63772	1472238
2	GOVERNOR DRIVE	1	E57428	0172225
3	PLATFORM DRIVE	1	E50873	0225155
4	PLATFORM DRIVE	1	E58967	0225151
5	WATERPUMP DRIVE	1	E52878	0283232
6	WATERPUMP DRIVE (WITHOUT AIR CONDITIONING)	1	E53936	0200130

2254 - 2256 - 2258

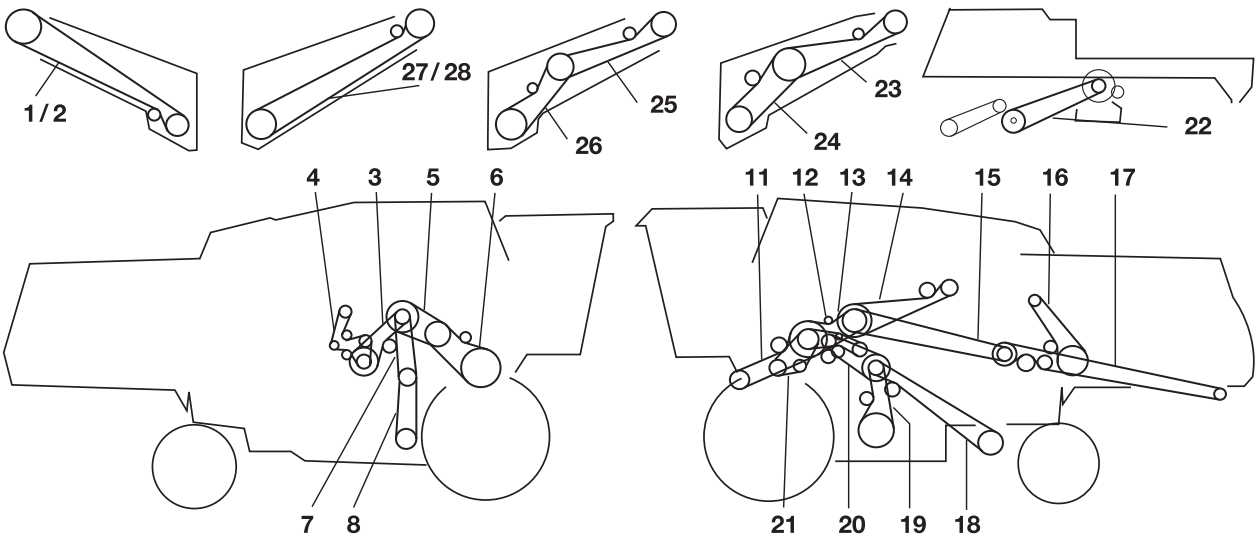

			OE	
1		1	Z59344	0203236
1		1	Z61151	0227281
2		1	Z57084	2301174
3		1	Z64912	0227201
3		1	Z61150	0227241
4		1	Z61857	0240348
5		1	Z59286	0224406 EE-TECH
6		1	Z59114	0301211
7		1	Z59342	0223543
8		1	Z60135	0201333
9		1	Z59322	1902206
10		1	Z56959	0203218
11		1	Z56421	0203155
12		1	Z48212	0227315
13		1	Z61152	0227286
13		1	Z60931	0227294
14		1	Z62211	0211206
15		1	Z61152	0227286
15		1	Z60931	0227294
15		1	Z54807	0203238
15		1	Z58751	0203245
16		1	Z61827	0227241
16		1	Z62213	0203194
17		1	Z62551	0227402
17		1	Z54406	0203350
18		1	Z62552	0227408
18		1	Z62214	0203364
21		1	Z54406	0203350
22		1	Z59419	0206356

2254 - 2256 - 2258 (CONTINUED)

			OE	
23		1	Z63005	0702212
24		1	Z59557	0202230
25	CYLINDER DRIVE	1	Z44936	0215196
26		1	Z61858	0225266
27		1	Z62110	0210183
28		1	Z62111	0210207

2264 - 2266

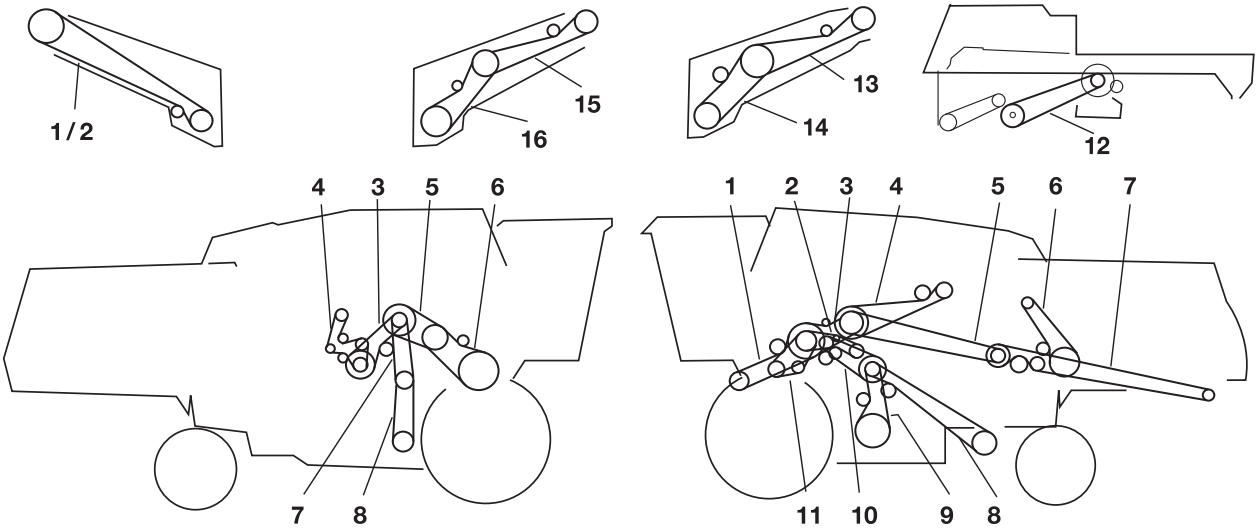

			OE	
1		1	Z59344	0203236
1		1	Z61151	0227281
2		1	Z57084	2301174
3		1	Z64912	0227201
3		1	Z61150	0227241
4		1	Z61857	0240348
5		1	Z59286	0224406 EE-TECH
6		1	Z59114	0301211
7		1	Z59342	0223543
8		1	Z60135	0201333
9		1	Z56421	0203155
10		1	Z56959	0203218
11		1	Z59322	1902206
12		1	Z48212	0227315
13		1	Z61152	0227286
13		1	Z60931	0227294
14		1	Z62211	0211206
15		1	Z61152	0227286
15		1	Z60931	0227294
15		1	Z54807	0203238
15		1	Z58751	0203245
16		1	Z61827	0227241
16		1	Z62213	0203194
21		1	Z54406	0203350
22		1	Z59419	0206356
23		1	Z63005	0702212
24		1	Z59557	0202230
25	CYLINDER DRIVE	1	Z44936	0215196
26		1	Z61858	0225266
27		1	Z62110	0210183
28		1	Z62111	0210207

3300 - 3400

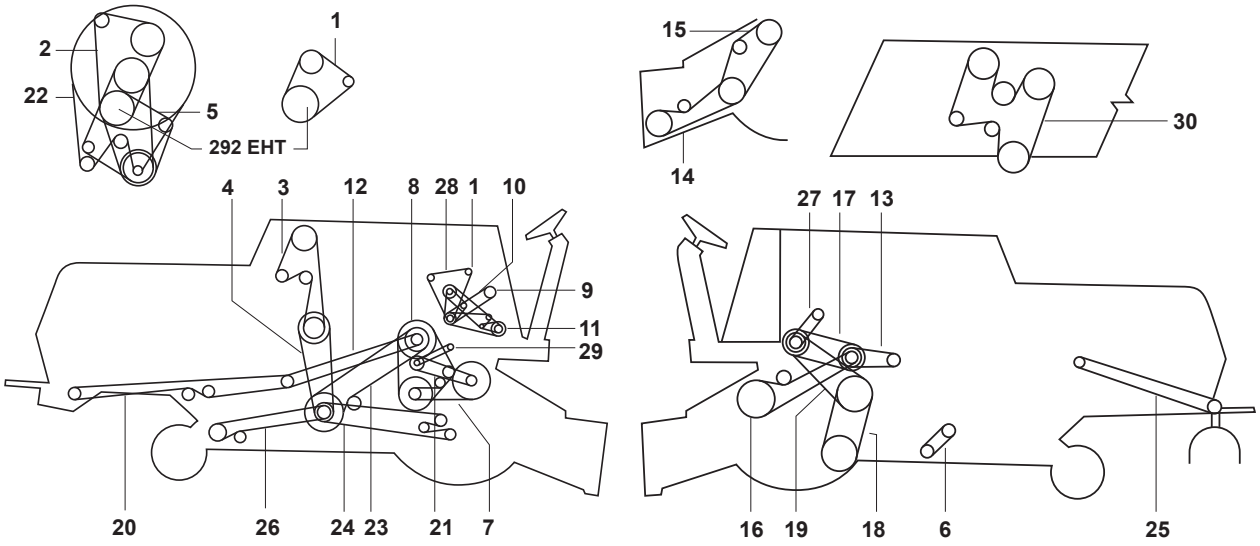

			OE	
1	ALTERNATOR AND WATERPUMP DRIVE 292 (GAS ENGINE)	1	H30634	0172208
1	ALTERNATOR AND WATERPUMP DRIVE 329DH-02	1	H80896	0200107
2	ALTERNATOR AND WATERPUMP DRIVE 329DH-02AND03	1	H82724	0200107
3	CLEAN GRAIN ELEVATOR U-JOINT LOADING AUGER	1	E60212	0302200
3	CLEAN GRAIN ELEVATOR DRIVE	1	H87648	0702212
4	CLEAN GRAIN ELEVATOR COUNTERSHAFT	1	H23817	0302179
5	ENGINE FAN AND ROTARY SCREEN DRIVE SHAFT	1	H86275	0172228
6	CLEANING FAN DRIVE	1	H80726	0210131
7	AIR CONDITIONING COMPRESSOR DRIVE 6329DH-01	1	H86275	0172228
7	AIR CONDITIONING COMPRESSOR DRIVE 329 (DIESEL ENGINE)	1	H77683	1900095
7	COMPRESSOR DRIVE (GAS ENGINE) AC 292	1	H80896	0200107
8	COMPRESSOR DRIVE (DIESEL ENGINE) AC 292	1	H80896	0200107
9	CYLINDER	3	AH80500	1401175
10	ENGINE FAN DRIVE	1	H79236	1400119
10	ENGINE FAN CAB (WITHOUT AIR CONDITIONING COMPRESSOR DRIVE)	1	H86271	0372258
11	ENGINE FAN COUNTERSHAFT	1	H79235	0272247
12	STRAW CHOPPER (FRONT)	1	H20407	0702225
14	PLATFORM AND CORN HEAD	3	AH76154	1402158
15	PLATFORM AND CORN HEAD LOWER VARIABLE	3	AH87197	0201123
16	PLATFORM AND CORN HEAD MIDDLE VARIABLE	1	H84441	0211250
17	PLATFORM AND FEEDER HOUSE (UPPER)	1	H76028	0203258
18	COUNTERSHAFT (PRIMARY)	2	AH98052	2002167
19	PROPULSION DRIVE (LOWER)	1	H76136	1902120
21	STRAW CHOPPER DRIVE (REAR)	1	H79787	0202404
22	ROTARY DEFLECTOR	1	H86039	1900132
22	ROTARY DEFLECTOR	1	H86060	1900136
23	COUNTERSHAFT (SECONDARY)	1	H138762	0202261
23	ROTARY SCREEN DRIVE	1	H86259	0242268

3300 - 3400 (CONTINUED)

			OE	
25	SHOE SUPPLY AUGERS (GRAIN)	1	H79285	0201264
26	STRAW SPREADER DRIVE	1	H80159	0201215
27	TAILINGS AUGER (LOWER)	1	E63031	0102216
28	UNLOADING AUGER COUNTERSHAFT	1	H76136	1902120
29	GOVERNOR DRIVE	1	H82479	1573242
31	CLEAN GRAIN ELEVATOR AND LOADING AUGER EXT	1	H81222	0702292

3316

			OE	
1		1	YC10143	2625330
2		1	YC15096	0302200
3		1	YC19021	0201108
4		2	YC19016	0227439
5		1	YC17373	2623278
6		1	AYC10133	0203272
7		1	YC10140	0213311
8		1	YC19017	1823326 EE-TECH
9		1	YC14551	1423329
10		1	YC14936	1600168
12		1	YC19018	0299231
13		1	KB1307032-1	0201108
14		1	YC15092	0213224
15		1	YC10142	0205207
16		1	YC19023	0210114
17		1	YC19014	0323219

3430

			OE	
1	COMPRESSOR DRIVE	1	N117674	1400087
2	PLATFORM DRIVE	1	E56262	0269238
3	WATERPUMP DRIVE	1	R73784	2787265

3830

			OE	
1	COMPRESSOR DRIVE	1	N117674	1400087
2	PLATFORM DRIVE	1	E72435	0270259
3	ROTARY SCREEN DRIVE	1	H86259	0242268
4	WATERPUMP DRIVE	1	N150864	0101105
5	WATERPUMP DRIVE	1	E75596	0201108

4400

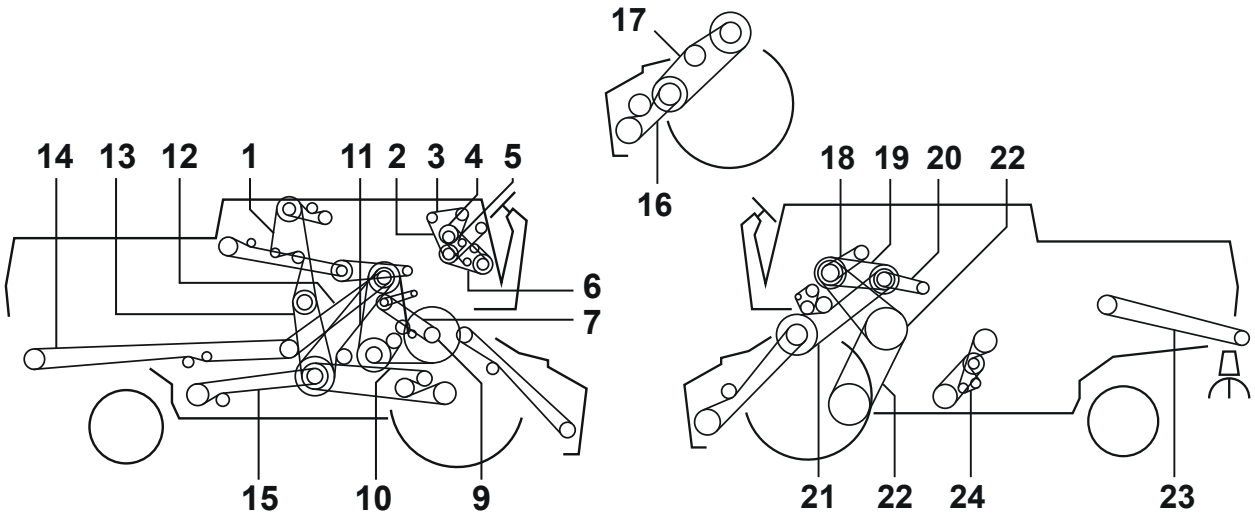

			OE	
1	CLEAN GRAIN ELEVATOR U-JOINT LOADING AUGER	1	E60212	0302200
1	CLEAN GRAIN ELEVATOR DRIVE	1	H87648	0702212
2	ALTERNATOR AND WATERPUMP DRIVE 292 (GAS ENGINE)	1	H30634	0172208
2		1	H80897	0172230
3	GOVERNOR DRIVE	1	H82479	1573242
4	ENGINE FAN DRIVE	1	H79236	1400119
5	ALTERNATOR AND WATERPUMP DRIVE 292 (GAS ENGINE)	1	H80896	0200107
5	ALTERNATOR AND WATERPUMP DRIVE 329DH-02 (SER NR 101301 - 151500)	1	H77683	1900095
5	ALTERNATOR AND WATERPUMP DRIVE 329DH-02 (SER NR FROM 151501)	1	H86275	0172228
5	ALTERNATOR AND WATERPUMP DRIVE 329DH-02 (SER NR PRIOR 101300)	1	H86275	0172228
6	ENGINE FAN COUNTERSHAFT	1	H79235	0272247
7	ROTARY DEFLECTOR	1	H86060	1900136
7	ROTARY DEFLECTOR	1	H86039	1900132
8	CYLINDER	3	AH80500	1401175
9		1	H75816	0312172
10	SHOE SUPPLY AUGERS (GRAIN)	1	H79285	0201264
11	SECONDARY COUNTERSHAFT	1	H80103	0202261
12	STRAW CHOPPER (FRONT)	1	H20407	0702225
13	CLEAN GRAIN ELEVATOR COUNTERSHAFT	1	H23817	0302179
14	STRAW CHOPPER DRIVE (REAR)	1	H79787	0202404
15		1	H79917	0502215
16	PLATFORM AND CORN HEAD LOWER VARIABLE	3	AH87197	0201123
16	PLATFORM AND CORN HEAD	3	AH76154	1402158
17		1	P46553	/
18	PROPULSION DRIVE (LOWER)	1	H76136	1902120
19	COUNTERSHAFT (PRIMARY)	2	AH98052	2002167
20	AIR CONDITIONING COMPRESSOR DRIVE 329 (DIESEL ENGINE)	1	H77683	1900095
21	PLATFORM AND FEEDER HOUSE (UPPER)	1	H76028	0203258
22	PROPULSION DRIVE	1	H75847	0112223
23	STRAW SPREADER DRIVE	1	H80159	0201215
24	CLEANING FAN DRIVE	1	H80726	0210131

4420

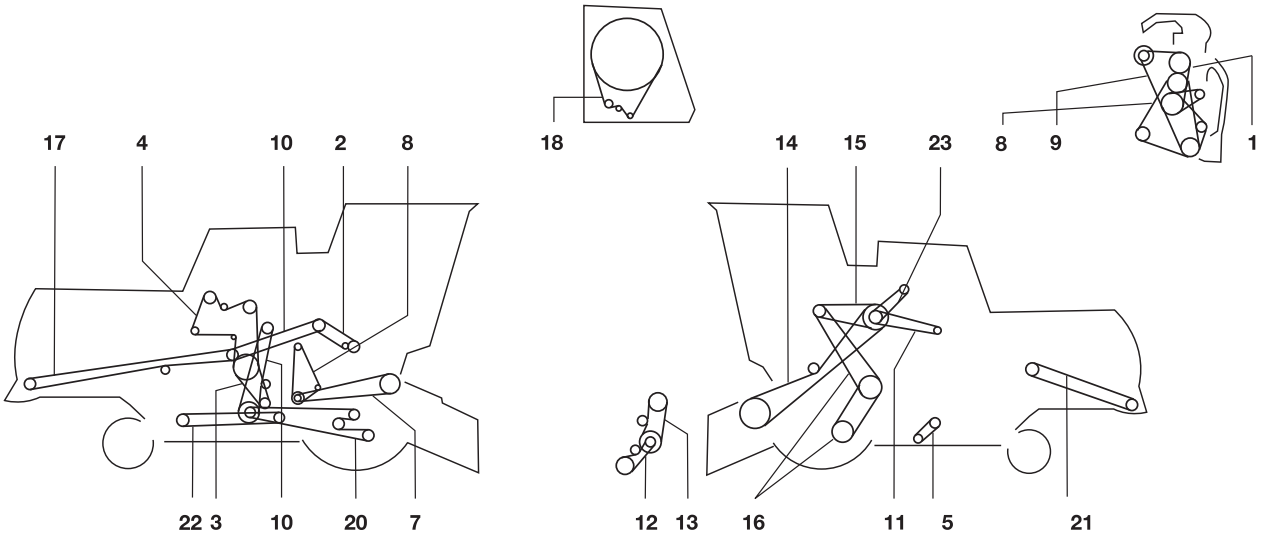

			OE	
1	ALTERNATOR AND WATERPUMP DRIVE	1	J101813	0200110
1	ALTERNATOR AND WATERPUMP DRIVE	1	H82724	0200107
2	AIR CONDITIONING COMPRESSOR DRIVE	1	H86275	0172228
3	ENGINE FAN (CAB WITHOUT AIR CONDITIONING)	1	H86271	0372258
3	ENGINE FAN (CAB WITH AIR CONDITIONING)	1	H94373	0372260
4	ENGINE FAN AND ROTARY SCREEN DRIVE SHAFT	1	H86275	0172228
5	ROTARY SCREEN DRIVE	1	H86259	0242268
6	COUNTERSHAFT (PRIMARY)	2	AH98052	2002167
8	UNLOADING AUGER COUNTERSHAFT	1	H76136	1902120
9	CLEANING FAN DRIVE	1	H80726	0210131
10	STRAW SPREADER DRIVE	1	H80159	0201215
11	HYDROSTATIC REEL PUMP	1	H77683	1900095
12	PLATFORM AND FEEDER HOUSE (UPPER)	1	H76028	0203258
13	PLATFORM AND CORN HEAD MIDDLE VARIABLE	1	P46553	/
14	PLATFORM AND CORN HEAD LOWER VARIABLE	3	AH87197	0201123
14	PLATFORM AND FEEDER HOUSE (RICE/GRAIN/CORN)	3	AH76154	1402158
15	BEATER DRIVE	1	H101352	0200125
15	BEATER DRIVE	1	H86039	1900132
16	SHOE SUPPLY AUGERS (GRAIN)	1	H79285	0201264
17	CLEAN GRAIN ELEVATOR DRIVE	1	H81222	0702292
18	CLEAN GRAIN ELEVATOR COUNTERSHAFT	1	H23817	0302179
20	CYLINDER	3	AH80500	1401175
21	TAILINGS AUGER (LOWER)	1	E63031	0102216
22	STRAW CHOPPER DRIVE (REAR)	1	H79787	0202404
23	STRAW CHOPPER (FRONT)	1	H20407	0702225
24	COUNTERSHAFT (SECONDARY)	1	H138762	0202261

4425

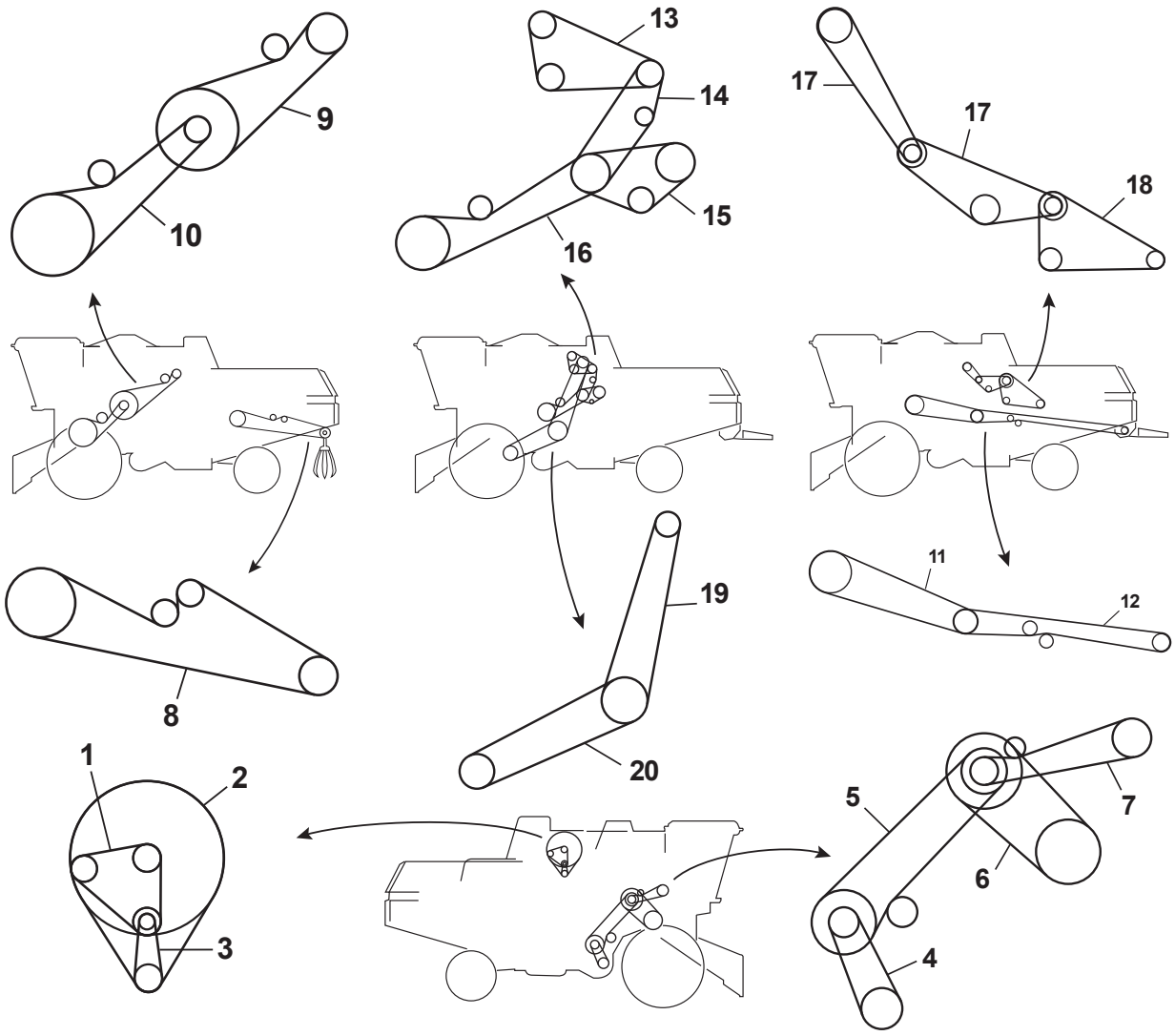

4425 (CONTINUED)

			OE	
1	ALTERNATOR DRIVE	1	AR72036	0272247
2	COUNTERSHAFT TO ROTARY SCREEN	1	Z34786	0283330
3	CRANKSHAFT TO COUNTERSHAFT	1	Z32190	0299231
4	CLEANING FAN	1	Z41178	0809104
5	SEPARATOR DRIVE	1	Z34405	0202230
6	CYLINDER DRIVE	1	Z44936	0215196
7	TAILINGS ELEVATOR	1	Z45026	0201152
8	STRAW SPREADER DRIVE	1	Z33774	1401336
9	BEATER DRIVE	1	Z33790	0225324 EE-TECH
10	FEEDER HOUSE	1	Z38186	0223304
11	FRONT STRAW CHOPPER	1	Z44761	0223357
12	REAR STRAW CHOPPER	1	Z44930	0223526
13	COMPRESSOR DRIVE	1	Z42756	0217140
14	CONDENSOR FAN	1	Z45482	1401113
15	HYDRAULIC PUMP DRIVE	1	Z34828	0201108
16	UNLOADING AUGER DRIVE	1	Z47911	2002179
17	CONDENSOR ROTARY BLADE	2	Z43863	0283250
18	CONDENSOR ROTARY BLADE	1	Z38704	0283326
19	UPPER GROUND DRIVE	2	AZ35635	0203281
20	LOWER GROUND DRIVE	1	Z34099	0213259

4435 - 4435 HYDRO

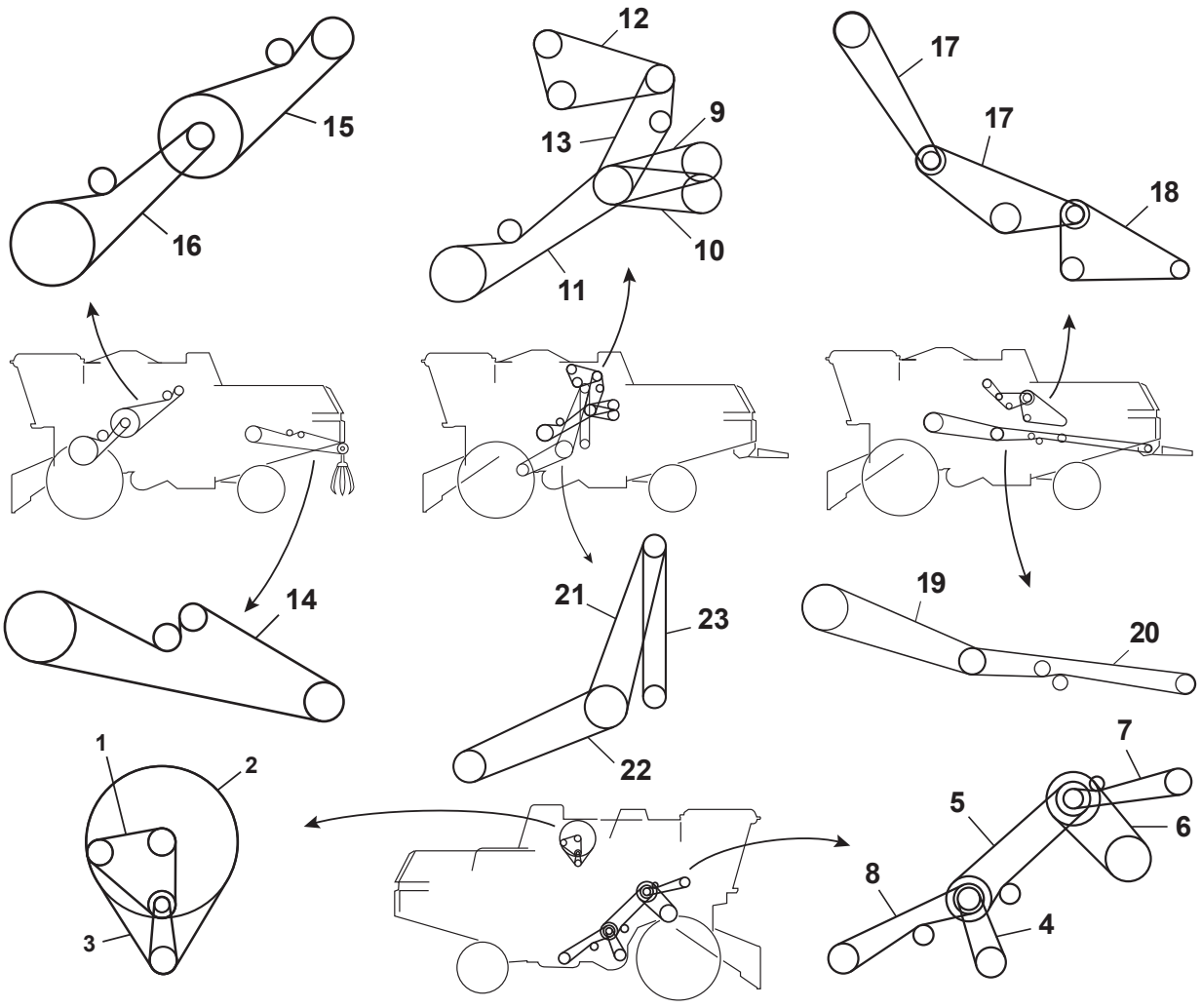

4435 - 4435 HYDRO (CONTINUED)

			OE	
1	ALTERNATOR AND WATERPUMP DRIVE	1	AR72036	0272247
2	COUNTERSHAFT TO ROTARY SCREEN (4435)	1	Z46764	0283324
2	COUNTERSHAFT TO ROTARY SCREEN (4435 HYDRO)	1	Z34786	0283330
3	CRANKSHAFT TO COUNTERSHAFT	1	Z32190	0299231
4	CLEANING FAN DRIVE	1	Z46365	0210114
5	SEPARATOR DRIVE	1	Z46366	0302241
6	CYLINDER DRIVE	1	Z44936	0215196
7	TAILINGS ELEVATOR DRIVE	1	Z45026	0201152
8	CLEAN GRAIN ELEVATOR	1	Z47912	0202182
9	HYDRAULIC PUMP DRIVE	1	Z34828	0201108
10	COMPRESSOR DRIVE	1	Z46759	0272218
11	UNLOADING AUGER	1	Z51212	0257283
12	COMPRESSOR DRIVE (4435 HYDRO)	1	Z42756	0217140
13	COMPRESSOR FAN DRIVE (4435 HYDRO)	1	Z45482	1401113
14	STRAW SPREADER DRIVE	1	Z32041	0301360
15	BEATER DRIVE	1	Z33790	0225324 EE-TECH
16	FEEDER HOUSE DRIVE	1	Z38186	0223304
17	CONDENSOR ROTARY BLADE (4435 HYDRO)	2	Z43863	0283250
18	CONDENSOR ROTARY BLADE (4435 HYDRO)	1	Z38704	0283326
19	FRONT STRAW CHOPPER	1	Z44761	0223357
20	REAR STRAW CHOPPER (PRIOR TO SER NR 56349)	1	Z47763	0223561
20	REAR STRAW CHOPPER (FROM SER NR 056350)	1	Z55645	0223572
21	UPPER GROUND DRIVE	2	AZ37807	0203290
22	LOWER GROUND DRIVE	1	Z34099	0213259
23	HYDROSTATIC DRIVE	1	Z53290	0224247 EE-TECH

5000 SERIES FORAGE HARVESTER

			OE	
0	ALTERNATOR (DELCO-REMY (6404)) (5200, 5400, 5440, 5460)	1	AR57266	0372255
0	ALTERNATOR (DELCO-REMY (6531A)) (5200, 5400)	2	AR53099	0372258
0	ALTERNATOR (MOTOROLA) (5200, 5400)	2	AR51059	1472251
0	ALTERNATOR (6619A) (5440, 5460)	1	AR86496	0399322
0	ALTERNATOR (5420-5440 (EUROPEAN EDITION))	1	AR57266	0372255
0	COMPRESSOR (5200-5400 (PRIOR TO S/N 124496))	1	R49422	0272218
0	COMPRESSOR (5200-5400 (S/N 124496 & ABOVE))	1	T53320	0172217
0	COMPRESSOR (5440, 5460, 5720-5820 (S/N 550001-680000))	1	R71603	0172214
0	COMPRESSOR (5720-5820 (S/N 680001 & ABOVE), 5730, 5830)	1	T53320	0172217
0	CUTTERHEAD (DURA-DRUM) (5200, 5400, 5440, 5460)	3	AE45931	0244462
0	CUTTERHEAD (J-KNIFE) (5200, 5400, 5440, 5460)	3	AE45931	0244462
0	CUTTERHEAD (5720-5820 (PRIOR TO S/N 765001), 5730, 5830)	3	AE45931	0244462
0	CUTTERHEAD (5420-5440 (EUROPEAN EDITION))	3	AE32893	0244462
0	FAN (6531A) (5200, 5400)	2	AR53099	0372258
0	FAN (6404) (5200-5400 (PRIOR TO S/N 335846))	2	AR51059	1472251
0	FAN (6404) (5200-5400 (S/N 335846 & ABOVE), 5440, 5460)	1	AR57266	0372255
0	FAN (6619A) (5440, 5460)	1	AR86496	0399322
0	FAN (6466AE) (5720, 5730)	2	RE29018	0372260
0	FAN (6619AE) (5820, 5830)	2	AR87671	0399322
0	FAN (5420-5440 (EUROPEAN EDITION))	1	AR57266	0372255
0	REVERSE KNIFE SHARPENER DRIVE (DURA-DRUM) (5200, 5400)	1	E36784	1402129
0	REVERSE KNIFE SHARPENER DRIVE (J-KNIFE) (5200, 5400)	1	E12574	0302136
0	REVERSE KNIFE SHARPENER DRIVE (5440-5460 (PRIOR TO S/N 425001))	1	E12574	0302136
0	REVERSE KNIFE SHARPENER DRIVE (5440-5460 (S/N 425001 & ABOVE), 5720, 5730, 5820, 5830)	1	E36784	1402129
0	REVERSE KNIFE SHARPENER DRIVE (5420-5440 (EUROPEAN EDITION PRIOR TO S/N 425001))	1	E12574	0302136
0	REVERSE KNIFE SHARPENER DRIVE (5420-5440 (EUROPEAN EDITION S/N 425001 & ABOVE))	1	E36784	1402129
0	HYDRAULIC PUMP (5200, 5400, 5460 (PRIOR TO S/N 380001))	1	H86271	0372258
0	HYDRAULIC PUMP (5460 (S/N 380001-594000))	1	E61749	0372260
0	HYDRAULIC PUMP (5460 (S/N 380001 & ABOVE), 5720, 5730, 5820, 5830)	1	E72830	0201108
0	HYDRAULIC PUMP (5440 (PRIOR TO S/N 380001))	1	H86272	0372262
0	HYDRAULIC PUMP (5440 (S/N 380001 & ABOVE))	1	E61748	0372272
0	HYDRAULIC PUMP (5420-5440 (EUROPEAN EDITION))	1	E61748	0372272

5200

			OE	
1		2	AR51059	1472251
2		2	AR57266	0372255
3		2	AR53099	0372258
4		1	E36784	1402129
5		1	E12574	0302136
6		3	AE45931	0244462

5440

			OE	
1		2	AR54592	0372255
2		1	E61748	0372272

5460

			OE	
1		1	E72830	0201108

6000 SERIES FORAGE HARVESTER

			OE	
0	COMPRESSOR DRIVE (6610, 6710, 6810, 6910)	1	Z48472	0372203
0	COMPRESSOR DRIVE (6610, 6650, 6710, 6750, 6810, 6850, 6910, 6950)	1	Z58970	0372199
1	ROTARY RADIATOR SCREEN DRIVE (6610, 6650, 6710, 6750, 6810, 6850, 6910, 6950)	1	Z48567	0242338
2	ENGINE BELT (6081HZ004) (6610, 6650)	1	R136235	0285337
3	FAN (6076HZ030) (6610)	1	Z55738	1472273
4	FAN (6710)	1	Z55771	0217176
5	FAN (6810, 6910)	2	AZ42604	0219123
5	FAN (6810, 6910, 6950)	2	AZ51087	2502099
5	FAN (UPPER BELT) (6810, 6910, 6950)	2	AZ56225	0219123
6	ALTERNATOR (LOWER BELT) (6810, 6910, 6950)	1	Z58886	0217116
7	FAN (LOWER BELT) (6750, 6850)	1	R502461	0289300
7	FAN (LOWER BELT) (6750, 6850)	1	R503312	0242215
8	ALTERNATOR (UPPER BELT) (6750, 6850)	1	R503505	0785321
9	DEFLECTOR AND TENSION ROLLS (6610, 6650, 6710, 6750, 6810, 6850, 6910, 6950)	3	AZ39677	0204153
9	BELT DRIVE (FOR GRAIN CROP KERNEL PROCESSOR) (6650, 6750, 6850, 6950)	3	AZ61336	0204156
10	DEFLECTOR AND TENSION ROLLS (6650-6750 (PRIOR TO S/N 503553))	2	AZ43805	0101088
10	DEFLECTOR AND TENSION ROLLS (6850-6950 (S/N 503553 & ABOVE))	2	AZ43805	0101088
11	MAIN DRIVE (1000 RPM CUTTER HEAD) (6610)	2	AZ51314	0240514
11	MAIN DRIVE (1150 RPM CUTTER HEAD, NOT FOR NORTH AMERICA) (6610)	2	AZ51311	0240521
11	MAIN DRIVE (1000 RPM CUTTER HEAD) (6710)	2	AZ51313	0299625
11	MAIN DRIVE (1150 RPM CUTTER HEAD, NOT FOR NORTH AMERICA) (6710)	2	AZ51310	0241523
11	MAIN DRIVE 1000 RPM CUTTER HEAD) (6810, 6910)	2	AZ51312	0244521
11	MAIN DRIVE (1150 RPM CUTTER HEAD, NOT FOR NORTH AMERICA) (6810, 6910)	2	AZ51309	0276589
11	MAIN DRIVE (1000 RPM CUTTER HEAD) (6650)	2	AZ53570	0240542
11	MAIN DRIVE (1150 RPM CUTTER HEAD) (6650)	2	AZ51641	0240549
11	MAIN DRIVE (1000 RPM CUTTER HEAD) (6750)	2	AZ53569	0241543
11	MAIN DRIVE (1150 RPM CUTTER HEAD) (6750)	2	AZ51640	0241551
11	MAIN DRIVE (1150 RPM CUTTER HEAD) (6850 (PRIOR TO S/N 505596))	2	AZ53559	0299653
11	MAIN DRIVE (1150 RPM CUTTER HEAD) (6650, 6750, 6850 (S/N 505596 & ABOVE))	2	AZ51639	0299660
11	MAIN DRIVE (1150 RPM CUTTER HEAD) (6950)	2	AZ51638	0299661
12	KERNEL PROCESSOR (1800 RPM FAN SPEED) (6610, 6650, 6710, 6750, 6810, 6850, 6910, 6950)	2	AZ39676	0201155
12	KERNEL PROCESSOR (2050 RPM FAN SPEED) (6610, 6650, 6710, 6750, 6810, 6850, 6910, 6950)	2	AZ39678	1101149
12	FOR GRAIN CROP KERNEL PROCESSOR (6650, 6750, 6850, 6950)	3	AZ61389	1401161
12	FOR GRAIN CROP KERNEL PROCESSOR (6650, 6750, 6850, 6950)	2	AZ43804	0201161
12	POWER DEFLECTOR DRIVE (1800 RPM FAN SPEED) (6610, 6710, 6810, 6910)	2	AZ43804	0201161
12	POWER DEFLECTOR DRIVE (2050 RPM FAN SPEED) (6610, 6710, 6810, 6910)	2	AZ39676	0201155

6000 HY-CYCLE

			OE	
1		1	N202856	0372257
2		2	N154802	0268234
3		1	N154412	0101085
4		1	T23526	1901098

6600 - 6600 SIDEHILL

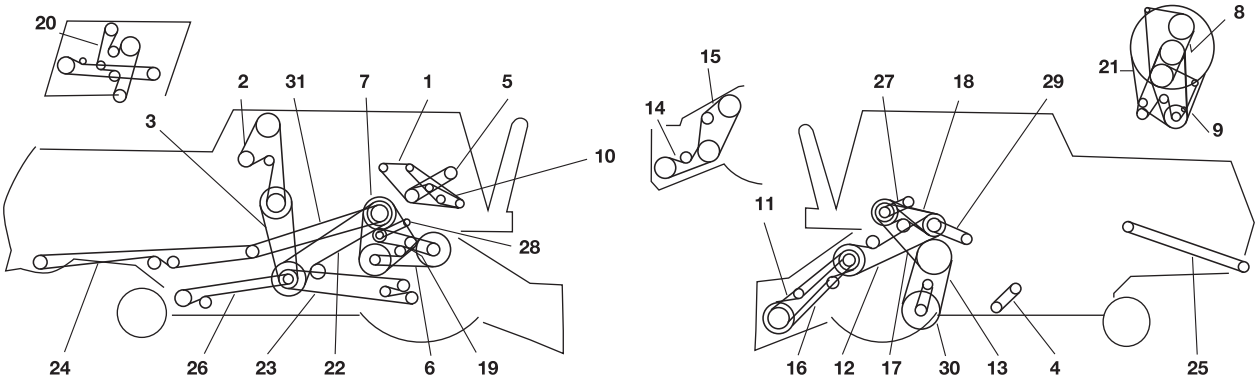

			OE	
1	SICKLE DRIVE	1	856559	0102180
1	ALTERNATOR AND WATERPUMP DRIVE	1	H82724	0200107
1	COUNTERSHAFT (PRIMARY)	2	AH75638	0203169
2	U-JOINT LOADING AUGER	1	H23950	0202235
2	SICKLE DRIVE	1	857862	0202182
3	CLEAN GRAIN ELEVATOR COUNTERSHAFT	1	H27433	0102174
4	CLEANING FAN DRIVE	1	H108668	0210144
5	AIR CONDITIONING COMPRESSOR DRIVE	1	H80896	0200107
5	AIR CONDITIONING COMPRESSOR DRIVE (6600 SIDEHILL)	1	H87459	0172211
5	AIR CONDITIONING COMPRESSOR DRIVE (6600 SIDEHILL)	1	R71603	0172214
6	CYLINDER N=280-845 RPM	3	AH80505	0201191
6	CYLINDER N=407-828 RPM	3	AH80503	1401199
6	CYLINDER N=287-873 RPM SLOW SPEED INTERMEDIATE SPEED	1	H96423	0224234
7	CYLINDER - INTERMEDIATE SHAFT	1	H113749	0213197
8	ENGINE FAN 6404DH	1	H86271	0372258
8	ENGINE FAN 6329GH-02 AND 6329DH-01	1	H86272	0372262
9	ENGINE FAN AND ROTARY SCREEN DRIVE SHAFT (6600 SIDEHILL)	1	H137207	0172230
11	FEEDER CONVEYOR (REGULAR FEEDER HOUSE)	1	H77766	0202300
11	FEEDER CONVEYOR (LONG FEEDER HOUSE)	1	H125380	1402358
12	PLATFORM AND FEEDER HOUSE (UPPER)	1	H76030	0210254
12	PLATFORM AND FEEDER HOUSE VARIABLE SPEED (UPPER)	1	H23927	1903244
13	HYDROSTATIC PROPULSION DRIVE (LOWER)	2	AH84633	0203206
13	HYDROSTATIC PROPULSION DRIVE (LOWER)	1	H88576	/
13	PROPULSION POSI-TORQUE (LOWER)	1	H75846	0213224
14	PLATFORM AND CORN HEAD	3	AH76154	1402158
14	PLATFORM AND CORN HEAD (6600 SIDEHILL)	3	AH89436	0202168
15	PLATFORM AND CORN HEAD MIDDLE VARIABLE	1	P46553	/
15	PLATFORM AND CORN HEAD MIDDLE VARIABLE	1	H84441	0211250
16	PLATFORM AND FEEDER HOUSE (LOWER) REGULAR	1	H77765	0203300
16	PLATFORM AND FEEDER HOUSE (LOWER) LONG	1	H79796	0203351
17	HYDROSTATIC PROPULSION DRIVE (UPPER)	2	AH84633	0203206
17	PROPULSION POSI-TORQUE (UPPER)	2	AH21301	0203218
17	HYDROSTATIC PROPULSION DRIVE (UPPER)	1	H88576	/

6600 - 6600 SIDEHILL (CONTINUED)

			OE	
17	PROPULSION POSI-TORQUE (UPPER) (6600 SIDEHILL)	2	AH21301	0203218
17	PROPULSION POSI-TORQUE (UPPER) (6600 SIDEHILL)	2	AH87127	1403222
18	COUNTERSHAFT (PRIMARY)	1	H84462	0244253
18	COUNTERSHAFT (PRIMARY) (6600 SIDEHILL)	1	H84462	0244253
18	COUNTERSHAFT (PRIMARY) (6600 SIDEHILL)	1	H108175	0244255
19	ROTARY DEFLECTOR	1	H86039	1900132
19	ROTARY DEFLECTOR	1	H86061	0200143
20	CLEAN GRAIN ELEVATOR DRIVE	1	H77766	0202300
21	ROTARY SCREEN DRIVE	1	H86259	0242268
22	COUNTERSHAFT (SECONDARY)	1	H77019	0203273
23	SHOE SUPPLY AUGERS (GRAIN)	1	H77010	1402336
24	STRAW CHOPPER DRIVE (REAR)	1	H79789	1402433
25	STRAW SPREADER DRIVE	1	H26858	1401275
26	TAILINGS AUGER (LOWER)	1	N110085	0302251
27	UNLOADING AUGER COUNTERSHAFT (6600 SIDEHILL)	1	H76150	0202126
27	UNLOADING AUGER COUNTERSHAFT (6600 SIDEHILL)	1	H84424	0203132
29	HYDROSTATIC REEL PUMP	1	H77683	1900095
30	HYDROSTATIC CHARGE PUMP DRIVE	1	T12042	0273215
30	HYDROSTATIC CHARGE PUMP DRIVE	1	T199T	0173214
31	STRAW CHOPPER DRIVE	1	H80103	0202261
32	6404DH	1	H85377	1472251
33		1	H75846	0213224

6602

			OE	
1	DISCHARGE AUGER SHAFT	1	P41508	0102129
2	TRACTION DRIVE	3	AH79627	2602331
3	PURIFY DRIVE	1	H76273	0210144
4	HYDRAULIC PUMP DRIVE	1	H81378	0372232
5	FEEDER CHANNEL (UPPER)	1	H76030	0210254
6	SICKLE KNIFE DRIVE	1	H81222	0702292
7	CUTTING TABLE DRIVE	1	H81524	0202222
8	ELEVATOR DRIVE GRAIN	1	H23950	0202235
9	ALTERNATOR DRIVE	1	H82724	0200107
9	ALTERNATOR DRIVE	1	R52507	0172253
10	FAN DRIVE	1	H79237	0372258
11		1	H86060	1900136
12	FAN DRIVE	1	H79235	0272247
13	CYLINDER DRIVE	1	H84421	0224243 EE-TECH
14	FEEDER CHANNEL	1	H77010	1402336
15	CYLINDER DRIVE INTERMEDIATE	1	H75565	0213197
16		1	H77019	0203273
17		1	H80103	0202261
18	ELEVATOR DRIVE GRAIN	1	H27433	0102174
19	AUGER DRIVE	1	N110085	0302251
20	SHAFT	1	H84425	0244255

6602 HILLSIDE

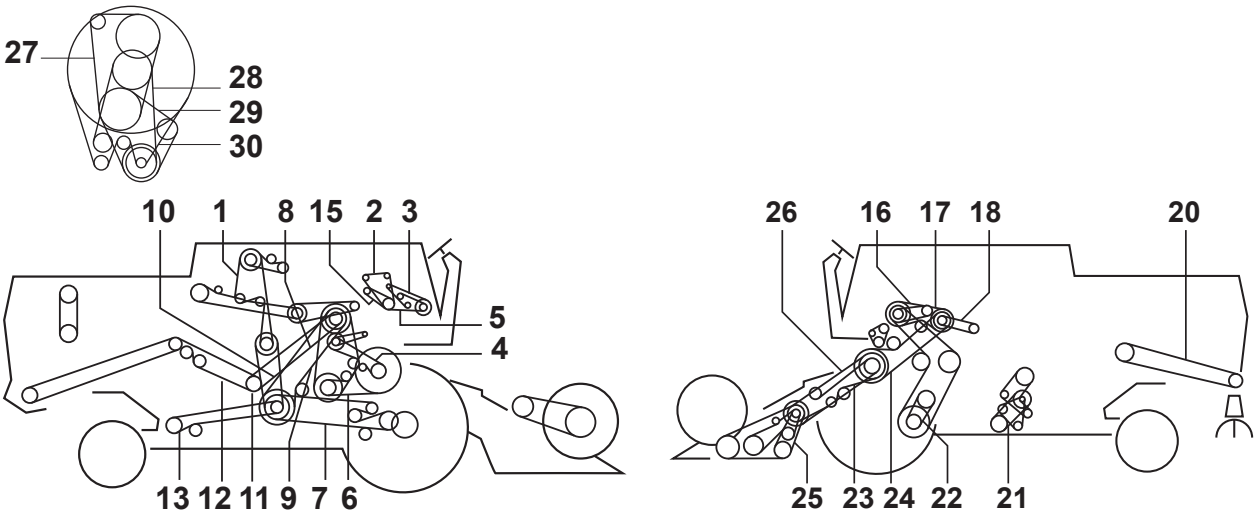

			OE	
1	CLEAN GRAIN ELEVATOR DRIVE	1	H23950	0202235
2	ALTERNATOR AND WATERPUMP DRIVE	1	H82724	0200107
2	ALTERNATOR AND WATERPUMP DRIVE	1	R52507	0172253
2	ALTERNATOR AND WATERPUMP DRIVE (SUB R70871)	1	R52603	0372255
2	ALTERNATOR AND WATERPUMP DRIVE (TURBO)	1	R70871	0200118
2	ALTERNATOR AND WATERPUMP DRIVE (TURBO)	1	H79236	1400119
2	ALTERNATOR AND WATERPUMP DRIVE (GASOLINE)	1	H80896	0200107
3	ENGINE FAN DRIVE (GASOLINE)	1	H79237	0372258
3	ENGINE FAN DRIVE (DIESEL)	1	H79237	0372258
3	ENGINE FAN DRIVE (DIESEL)	1	H84740	0372262
4	ROTARY DEFLECTOR (SUB H86060)	1	H82318	1900136
4	ROTARY DEFLECTOR	1	H86060	1900136
4	ROTARY DEFLECTOR	1	H86039	1900132
4	ROTARY DEFLECTOR	1	H101352	0200125
5	ENGINE FAN COUNTERSHAFT (GASOLINE)	1	H79235	0272247
5	ENGINE FAN COUNTERSHAFT (DIESEL)	1	H79235	0272247
5	ENGINE FAN COUNTERSHAFT (DIESEL)	1	H85382	0172235
6	CYLINDER (350-1058 RPM)	3	AH80503	1401199
6	CYLINDER (350-1058 RPM) (SUB H96408)	1	H84421	0224243 EE-TECH
6	CYLINDER (350-1058 RPM)	1	H96408	0224243 EE-TECH
7	SHOE GRAIN SUPPLY AUGERS	1	H77010	1402336
8	CYLINDER, INTERMEDIATE SHAFT (SUB H113749)	1	H75565	0213197
8	CYLINDER, INTERMEDIATE SHAFT	1	H113749	0213197
9	COUNTERSHAFT (SECONDARY)	1	H77019	0203273
10	STRAW CHOPPER (FRONT)	1	H80103	0202261
11	CLEAN GRAIN ELEVATOR COUNTERSHAFT	1	H27433	0102174
12	STRAW CHOPPER (REAR)	1	H81653	1402469
13	TAILINGS AUGER (LOWER)	1	P50335	1602254
13	TAILINGS AUGER (LOWER)	1	N110085	0302251

6602 HILLSIDE (CONTINUED)

			OE	Gates
15	COMPRESSOR (SUB R69562)	1	R46098	0272215
15	COMPRESSOR (SUB R71603)	1	R69562	0172214
15	COMPRESSOR	1	R71603	0172214
16	DISCHARGE AUGER SHAFT COUNTERSHAFT	1	P41508	0102129
16	DISCHARGE AUGER SHAFT COUNTERSHAFT (6404TH-02)	1	H84424	0203132
17	PRIMARY COUNTERSHAFT	2	AH79671	0203174
17	PRIMARY COUNTERSHAFT	1	H84462	0244253
17	PRIMARY COUNTERSHAFT (SUB FOR H108175)	1	H84425	0244255
17	PRIMARY COUNTERSHAFT (6404TH-02)	1	H108175	0244255
18	HYDRAULIC REEL DRIVE	1	H77683	1900095
19	PROPULSION/TRACTION DRIVE	3	AH79627	2602331
20	STRAW SPREADER	1	H26858	1401275
21	PURIFY DRIVE (SUB H108668)	1	H76273	0210144
21	CLEANING FAN, 66-1/2" LONG	1	H108668	0210144
22	CHARGE PUMP/HYDRAULIC PUMP DRIVE	1	H81378	0372232
23	PLATFORM AND FEEDER HOUSE (UPPER)	1	H76030	0210254
24	FEEDER CONVEYOR	1	H81222	0702292
25	SICKLE DRIVE/CUTTING TABLE DRIVE	1	H81524	0202222
26	PLATFORM AND FEEDER HOUSE (LOWER)	1	H33885	0203292
27	ALTERNATOR AND WATER PUMP	1	H79236	1400119
28	ENGINE FAN	1	H86271	0372258
29	ENGINE FAN AND ROTARY SCREEN DRIVE SHAFT	1	H86273	0372232
30	ROTARY SCREEN DRIVE	1	H86259	0242268

6610

			OE	Gates
1		1	Z48567	0242338
2		2	AZ39678	1101149
3		2	AZ39676	0201155
4		3	AZ39677	0204153
5		2	AZ51314	0240514
6		1	Z55738	1472273

6620

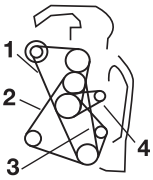

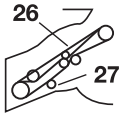

LONG

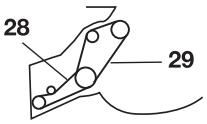

SIDEHILL

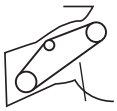

VARIABLE DRIVE



REG. FIXED LESS REV.

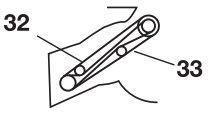

REGULAR FIXED

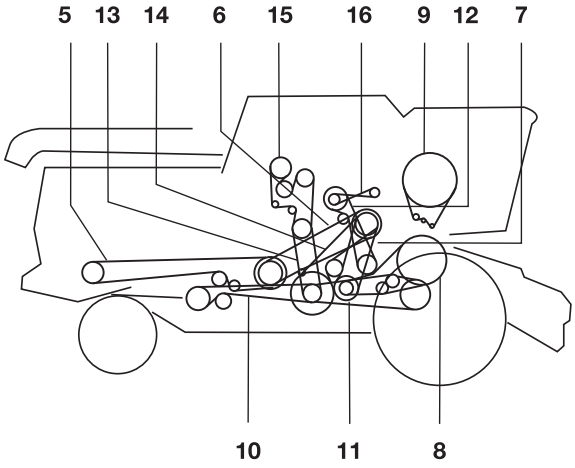

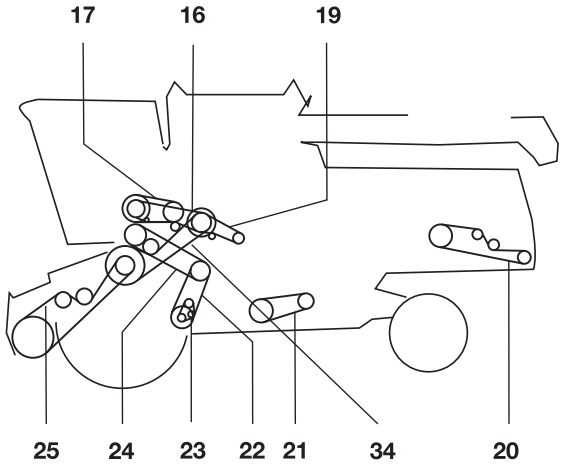

			OE	
0	TORQUE-SENSING COUNTERSHAFT DRIVE	1	H113749	0213197
0	COUNTERSHAFT (UPPER) 2480 MM	1	P49415	0102189
1	ALTERNATOR AND WATERPUMP DRIVE	1	H79236	1400119
2	ROTARY SCREEN DRIVE	1	H86273	0372232
3	ENGINE FAN DRIVE	1	H86272	0372262
4	AIR CONDITIONING COMPRESSOR DRIVE (SERIAL NR. 600000 - ...)	1	H113565	0172219
4	AIR CONDITIONING COMPRESSOR DRIVE (SERIAL NR. ... - 600001)	1	R71603	0172214
5	STRAW CHOPPER DRIVE (REAR)	1	H103344	0202528
6	STRAW CHOPPER DRIVE	1	H101436	0202261
7	COUNTERSHAFT 2650 MM (LOWER)	1	E60212	0302200
8	CYLINDER - 3-BANDED (N=315 TO 830 RPM) (SERIAL NR. - ... - 551900)	1	H96423	0224234
8	CYLINDER - 3-BANDED (SERIAL NR. ... - 551900)	1	H96408	0224243 EE-TECH
8	CYLINDER - 4-BANDED (OPTIONAL) (SERIAL NR. 551899 - ...)	1	H96422	0225245 EE-TECH
8	CYLINDER - 4-BANDED (STANDARD) (SERIAL NR. 551899 - ...)	1	H110375	0325248
9	ROTARY SCREEN DRIVE	1	H86259	0242268
10	TAILINGS AUGER DRIVE	1	H118730	2002253
11	SHOE SUPPLY AUGERS	1	H77010	1402336
12	BEATER (100 % BEATER SPEED)	1	H96414	0202139
12	BEATER (150 % BEATER SPEED)	1	H101469	0302146
13	CLEAN GRAIN ELEVATOR COUNTERSHAFT	1	H27433	0102174
14	COUNTERSHAFT (SECONDARY)	1	H81222	0702292
14	COUNTERSHAFT (SECONDARY)	1	H110300	0702295

6620 (CONTINUED)

			OE	
15	CLEAN GRAIN ELEVATOR AND LOADING	1	H77766	0202300
17	UNLOADING AUGER DRIVE	2	AH96300	0102129
18	MULTI-GROOVE SEPARATOR DRIVE	1	H108175	0244255
19	HYDRAULIC REEL PUMP DRIVE	1	H86275	0172228
19	HYDRAULIC REEL PUMP DRIVE	1	H137207	0172230
20	STRAW SPREADER (FRONT)	1	H112421	0201258
21	CLEANING FAN DRIVE	1	H108668	0210144
22	GROUND DRIVE (LOWER)	2	AH84633	0203206
22	GROUND DRIVE (LOWER)	1	H75846	0213224
23	HYDROSTATIC CHARGE PUMP (SERIAL NR. 610300 - ...)	1	T32517	0273217
23	HYDROSTATIC CHARGE PUMP (SERIAL NR. ... - 610300)	1	T199T	0173214
24	GROUND DRIVE (UPPER)	2	AH84633	0203206
24	POSI-TORQUE (UPPER) GROUND DRIVE	2	AH87127	1403222
25	FEEDER HOUSE DRIVE (REGULAR) (SERIAL NR. 502551-615100)	1	H111519	0703313
26	FEEDER CONVEYOR DRIVE (SERIAL NR. ... - 403301)	1	H125380	1402358
27	FEEDER HOUSE - LOWER, LONG (SERIAL NR. ... - 403301)	1	H79796	0203351
28	MULTI-GROOVE (SIDEHILL ONLY)	3	AH89436	0202168
29	FEEDER HOUSE - LOWER, LONG (SERIAL NR. 403300 - ...)	1	H97929	0203366
29	FEEDER HOUSE (UPPER) (SIDEHILL ONLY) (SERIAL NR. ... - 610300)	1	H84441	0211250
30	FEEDER HOUSE DRIVE CONVEYOR	1	H110921	0211317
30	FEEDER HOUSE - LOWER FIXED LESS REVERSER (SERIAL NR 61030 - ...)	1	H116422	0211323
31	FEEDER HOUSE - LOWER FIXED LESS REVERSER (SERIAL NR 615100 - ...)	1	Z30130	0203295
32	FEEDER HOUSE - LOWER, REG. FIXED (SERIAL NR. 502550 - ...)	1	H77765	0203300
33	FEEDER HOUSE CONVEYOR, REG. FIXED (SERIAL NR. 502550 - ...)	1	H77766	0202300
34	FEEDER HOUSE - LESS REVERSER (SERIAL NR. 615100 - ...)	1	H76030	0210254
34	FEEDER HOUSE - REVERSER, VARIATOR DRIVE	1	H23927	1903244

6622

			OE	
1	ALTERNATOR AND WATERPUMP DRIVE	1	H79236	1400119
2	AIR CONDITIONING COMPRESSOR DRIVE	1	R71603	0172214
3	ENGINE FAN DRIVE	1	H86272	0372262
4	ROTARY SCREEN DRIVE	1	H86273	0372232
5	LEFT-HAND SIDE	1	H136881	0202245
6	BEATER DRIVE	1	H101469	0302146
7	TORQUE-SENSING COUNTERSHAFT DRIVE	1	H113749	0213197
8	CYLINDER - 3-BANDED (SLOW SPEED)	1	H96423	0224234
8	CYLINDER - 4-BANDED (OPTIONAL)	1	H96422	0225245 EE-TECH
8	CYLINDER - 4-BANDED (STANDARD)	1	H110375	0325248
9	CLEAN GRAIN ELEVATOR AND LOADING	1	H23950	0202235
10	CLEAN GRAIN ELEVATOR COUNTERSHAFT	1	H27433	0102174
11	CLEAN GRAIN ELEVATOR AND LOADING	1	H77766	0202300
12	CLEAN GRAIN ELEVATOR COUNTERSHAFT	1	H27433	0102174
13	COUNTERSHAFT (SECONDARY)	1	H81222	0702292
13	COUNTERSHAFT (SECONDARY)	1	H110300	0702295
14	SHOE SUPPLY AUGERS	1	H77010	1402336
15	TAILINGS AUGER DRIVE	1	H118730	2002253
16	STRAW CHOPPER DRIVE (REAR)	1	H103344	0202528
17	STRAW CHOPPER DRIVE	1	H101436	0202261
18	STRAW SPREADER (FRONT)	1	H112421	0201258
19		1	H86275	0172228
20	CLEANING FAN DRIVE	1	H108668	0210144
21	SICKLE DRIVE	1	H81524	0202222
22	UNLOADING AUGER DRIVE	2	AH96300	0102129
23	FEEDER HOUSE DRIVE	1	H23927	1903244
24	FEEDER HOUSE (LOWER)	1	H77765	0203300
25	MULTI-GROOVE SEPARATOR DRIVE	1	H108175	0244255
26	HYDROSTATIC GROUND DRIVE	3	AH79627	2602331
27	HYDROSTATIC CHARGE PUMP DRIVE	1	H86273	0372232
28	FEEDER HOUSE DRIVE	1	H76030	0210254
29	FEEDER CONVEYOR DRIVE	1	H81222	0702292
30	FEEDER HOUSE (LOWER)	1	H33885	0203292

6650

			OE	
1		1	R136235	0285337

JOHN DEERE

6700 - 6700S

			OE	
1		1	R135199	0285343
2		1	N303353	0224225

6710

			OE	
1		2	AZ51313	0299625
2		1	Z55771	0217176

6750

			OE	
1		1	R503312	0242215
2		1	R502599	0285281

6810

			OE	
1		2	AZ51312	0244521
2		1	Z58886	0217116
3		2	AZ56225	0219123

6850

			OE	
1		2	AZ53559	0299653
2		2	AZ51639	0299660

6910

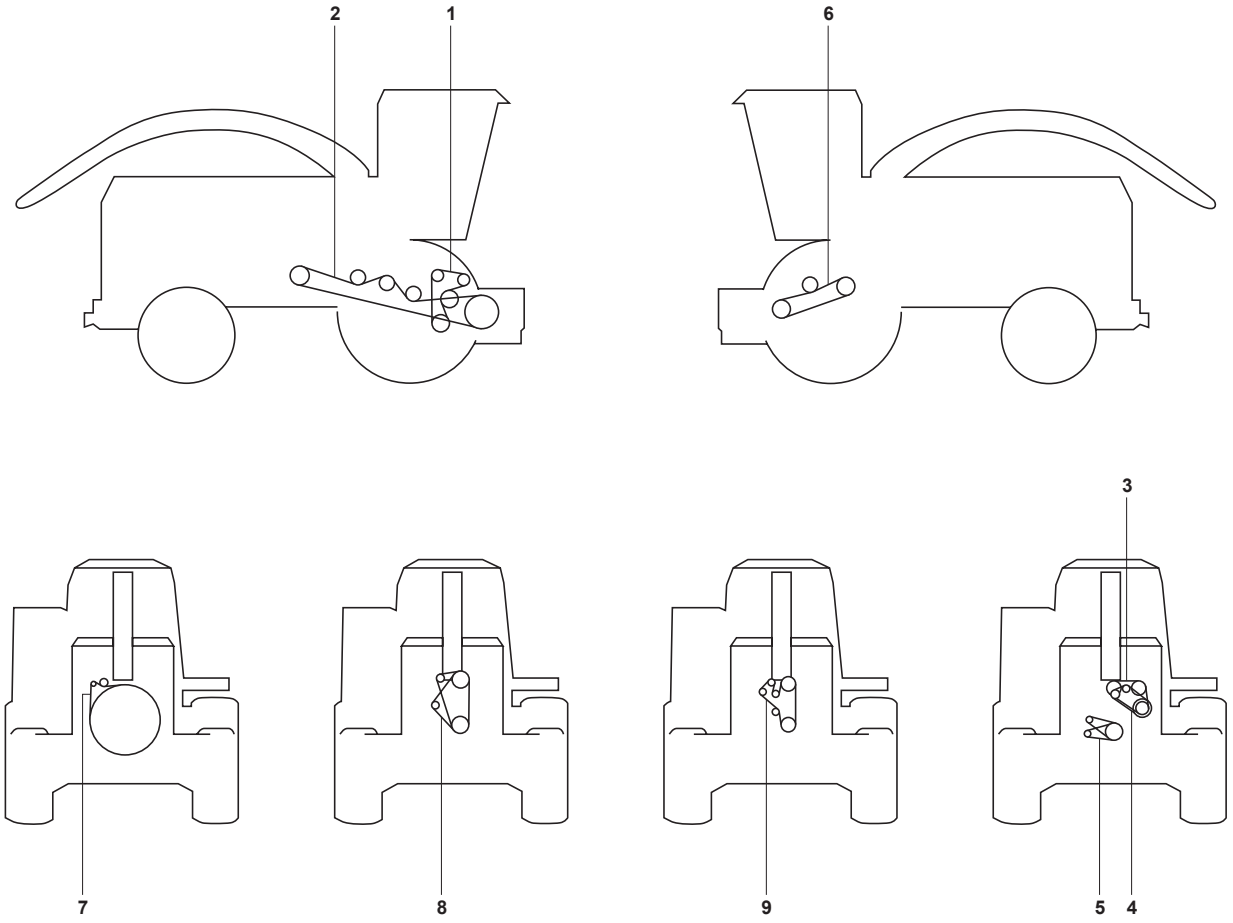

			OE	
0		1	AZ43804	0201161
0		1	AZ39676	0201155
1		1	AZ39677	0204153
2		1	AZ51312	0244521
2		1	AZ51309	0276589
3		1	AZ42604	0219123
3		1	AZ51087	2502099
4		1	/	/
5		2	Z58886	0217116
6		1	AZ39676	0201155
6		1	AZ39678	1101149
7		1	Z48567	0242338

JOHN DEERE

6950

			OE	
1		2	AZ51638	0299661

7000 SERIES FORAGE HARVESTER

			OE	
0	ALTERNATOR (7280, 7380, 7480, 7580, 7780)	1	R531353	0785278
0	FAN (7280)	1	HXE63308	0211126
1	ROTARY RADIATOR SCREEN DRIVE (LONG BELT) (7180, 7250, 7280, 7350, 7380, 7450, 7480, 7550, 7580)	1	Z103479	0100321
1	ROTARY RADIATOR SCREEN DRIVE (LONG BELT) (7750, 7780, 7850, 7950, 7980)	1	Z103479	0100321
2	ROTARY RADIATOR SCREEN DRIVE (LOWER SMALL BELT) (7180, 7250, 7280, 7350, 7380, 7450, 7480, 7550, 7580, 7750, 7780)	1	HXE15546	1443167
3	ROTARY RADIATOR SCREEN DRIVE (7200, 7300 (PRIOR TO S/N 508318))	1	Z48567	0242338
4	ROTARY RADIATOR SCREEN DRIVE (7300 (S/N 508318 & ABOVE), 7400, 7500, 7700, 7800)	1	Z78860	0242376
5	ROTARY RADIATOR SCREEN DRIVE (LOWER SMALL BELT) (7850, 7950, 7980)	1	HXE15547	0172228
6	ENGINE BELT (7180, 7250)	1	L114468	0385349
6	ENGINE BELT (7200 (PRIOR TO S/N 507479))	1	R136235	0285337
6	ENGINE BELT (7200 (S/N 507479 & ABOVE))	1	L114293	0285348
7	ALTERNATOR (UPPER BELT) (7300 (S/N 507479 & ABOVE))	1	L115660	0785319
7	ALTERNATOR (UPPER BELT) (7350, 7380, 7450, 7480, 7550, 7580 7750, 7780)	1	L115660	0785319
7	ALTERNATOR (UPPER BELT, IT4 ENGINE) (7480, 7580, 7780)	1	R123456	0785278
7	ALTERNATOR (UPPER BELT) (7400-7500-7700 (S/N 507479 & ABOVE), 7800)	1	L110603	0285320
8	FAN (LOWER BELT) (7300)	1	R503312	0242215
8	FAN (LOWER BELT) (7400, 7500, 7700, 7800)	1	R502461	0289300
8	FAN (LOWER BELT) (7350, 7380, 7450, 7480, 7550, 7580, 7750, 7780)	1	R502461	0289300
9	ALTERNATOR (UPPER BELT) (7200, 7300 (PRIOR TO S/N 507479), 7400, 7500)	1	R503932	0385323
9	ALTERNATOR (UPPER BELT) (7200, 7400-7500-7700 (PRIOR TO S/N 507479))	1	Z73506	0285326
10	COMPRESSOR (7200-7300-7400-7500-7700 (PRIOR TO S/N 507479), 7800)	1	Z58970	0372199
11	ALTERNATOR (7800, 7850)	1	L110599	0785285
12	FAN (7800 (PRIOR TO S/N 508100))	1	Z101214	0289340
12	FAN (7800 (S/N 508100 & ABOVE), 7850)	1	Z104994	☎
13	FAN (QSK19 ENGINE) (7950, 7980)	1	REC020699600	☎
14	FAN (MIDDLE, QSK19 ENGINE) (7950, 7980)	1	REC309001600	☎
15	ALTERNATOR (QSK19 ENGINE) (7950, 7980)	1	HXE17071	0285251
16	DEFLECTOR/TENSION ROLLS (7180, 7200, 7250, 7280, 7300)	3	AZ39677	0204153
16	DEFLECTOR/TENSION ROLLS (7350, 7380, 7400, 7450, 7480, 7500, 7550, 7580)	3	AZ39677	0204153
16	DEFLECTOR/TENSION ROLLS FOR KERNEL PROCESSOR (7180, 7200, 7250, 7280, 7300, 7350, 7380)	3	AZ61336	0204156
16	DEFLECTOR/TENSION ROLLS FOR KERNEL PROCESSOR (7400, 7450, 7480, 7500, 7550, 7580)	3	AZ61336	0204156
16	DEFLECTOR/TENSION ROLLS (7700, 7750, 7780, 7800, 7850, 7950, 7980)	3	AZ61336	0204156
16	DEFLECTOR/TENSION ROLLS (7750-7850-7950 (USA))	3	AZ101386	0204159
16	DEFLECTOR/TENSION ROLLS (7780, 7980)	3	AXE29294	0204136
16	DEFLECTOR/TENSION ROLLS (7780, 7980)	4	AXE34908	0299317
17	MAIN DRIVE (1000 RPM CUTTER HEAD, 1800 & 2000 RPM FAN SPEED) (7180, 7200, 7250, 7550)	2	AZ53570	0240542

7000 SERIES FORAGE HARVESTER (CONTINUED)

			OE	
17	MAIN DRIVE (1150 RPM CUTTER HEAD, 1800 & 2000 RPM FAN SPEED) (7180, 7200, 7250, 7550)	2	AZ51641	0240549
17	MAIN DRIVE (1000 RPM CUTTER HEAD, 1800 & 2000 RPM FAN SPEED) (7280, 7300, 7350, 7380)	2	AZ53569	0241543
17	MAIN DRIVE (1150 RPM CUTTER HEAD, 1800 & 2000 RPM FAN SPEED) (7280, 7300, 7350, 7380)	2	AZ51640	0241551
17	MAIN DRIVE (1000 RPM CUTTER HEAD, 1800 & 2000 RPM FAN SPEED) (7400, 7450, 7480, 7550)	2	AZ53559	0299653
17	MAIN DRIVE (1150 RPM CUTTER HEAD, 1800 RPM FAN SPEED) (7180, 7200, 7250, 7300, 7350, 7550)	2	AZ51639	0299660
17	MAIN DRIVE (1150 RPM CUTTER HEAD, 1800 & 2000 RPM FAN SPEED) (7400, 7450, 7480, 7550)	2	AZ51639	0299660
17	MAIN DRIVE (1150 RPM CUTTER HEAD, 1800 & 2000 RPM FAN SPEED) (7500, 7580, 7700, 7750, 7800, 7850)	2	AZ51638	0299661
17	MAIN DRIVE (1095 RPM CUTTER HEAD) (7700, 7750, 7800, 7850)	2	AZ58519	0299666
17	MAIN DRIVE (1200 RPM CUTTER HEAD, 1600 RPM FAN SPEED) (7750, 7780, 7950, 7980)	2	AZ104276	0299661
18	PROCESSOR (1600 RPM, NA, KERNEL PROCESSOR, SORGHUM/BEAN SPEED) (7700, 7750-7950 (PRIOR TO S/N 510524), 7800, 7850)	3	AZ100808	0201170
18	PROCESSOR (1600 RPM, NA, KERNEL PROCESSOR, SORGHUM/BEAN SPEED) (7750-7950 (S/N 510524 & ABOVE), 7780, 7980)	1	HXE13951	0270313
18	PROCESSOR (1800 RPM, NA) (7180, 7200, 7250, 7280, 7300, 7350, 7380, 7400, 7450, 7480)	3	AZ100807	1601166
18	PROCESSOR (1800 RPM, NA) (7500, 7550, 7580)	3	AZ100807	1601166
18	PROCESSOR (2000 RPM, NA) (7180, 7200, 7250, 7280, 7300, 7350, 7380, 7400)	3	AZ100808	0201170
18	PROCESSOR (2000 RPM, NA) (7450, 7480, 7500, 7550, 7580)	3	AZ100808	0201170
18	PROCESSOR (2000 RPM, NA) (7180, 7280, 7250, 7350, 7380, 7450, 7480, 7550, 7580)	1	HXE13957	0270310
18	PROCESSOR (1800 RPM, KERNEL PROCESSOR, OUTSIDE NA) (7180, 7200, 7250-7350-7450-7550 (PRIOR TO S/N 511028), 7280)	3	AZ100808	0201170
18	PROCESSOR (1800 RPM, KERNEL PROCESSOR, OUTSIDE NA) (7300, 7380, 7400, 7480, 7500, 7580)	3	AZ100808	0201170
18	PROCESSOR (1800 RPM, KERNEL PROCESSOR, OUTSIDE NA) (7180, 7250-7350-7450-7550 (S/N 511028 & ABOVE), 7280)	1	HXE13957	0270310
18	PROCESSOR (1800 RPM, KERNEL PROCESSOR, OUTSIDE NA) (7380, 7480, 7580)	1	HXE13957	0270310
18	PROCESSOR (1800 RPM, KERNEL/GRAIN CROP PROCESSOR, OUTSIDE NA) (7180, 7200, 7250, 7280, 7300, 7350, 7380, 7400, 7450, 7480)	3	AZ100807	1601166
18	PROCESSOR (1800 RPM, KERNEL/GRAIN CROP PROCESSOR, OUTSIDE NA) (7500, 7550, 7580)	3	AZ100807	1601166
18	PROCESSOR (2000 RPM, KERNEL PROCESSOR, OUTSIDE NA) (7180, 7200, 7250-7350-7450-7550 (PRIOR TO S/N 511027), 7280)	3	AZ100809	0201173
18	PROCESSOR (2000 RPM, KERNEL PROCESSOR, OUTSIDE NA) (7300, 7380, 7400, 7480, 7500, 7580)	3	AZ100809	0201173
18	PROCESSOR (2000 RPM, KERNEL PROCESSOR, OUTSIDE NA) (7180, 7250-7350-7450-7550 (S/N 511028 & ABOVE), 7280)	1	HXE13951	0270313
18	PROCESSOR (2000 RPM, KERNEL PROCESSOR, OUTSIDE NA) (7380, 7480, 7580)	1	HXE13951	0270313
18	PROCESSOR DRIVE (2000 RPM, KERNEL STAR, OUTSIDE NA) (7180, 7280, 7380, 7480, 7580)	1	HXE62680	1470303
18	PROCESSOR (FOR POWER CHUTE DRIVE) (7180, 7200, 7250, 7280, 7300, 7350, 7380, 7400, 7450, 7480)	2	AZ100805	0101172
18	PROCESSOR (FOR POWER CHUTE DRIVE) (7500, 7550, 7580)	2	AZ100805	0101172
18	PROCESSOR (FOR POWER CHUTE) (7700, 7750, 7780, 7800, 7850, 7950, 7980)	2	AZ100806	2301174
18	PROCESSOR (FOR KERNEL PROCESSOR) (7700, 7750, 7780, 7800, 7850, 7950, 7980)	3	AZ100810	2301174

JOHN DEERE

7440

			OE	
1		2	N220403	0268303
2		1	N31437	0102176
3		1	L4339N	0202187
4		1	N121113	1902206
5		1	N125041	0702212

7445

			OE	
1		1	N129916	0300201
2		2	N129955	0101105
3		1	N33746	2001162
4		1	N129508	0202332

7700

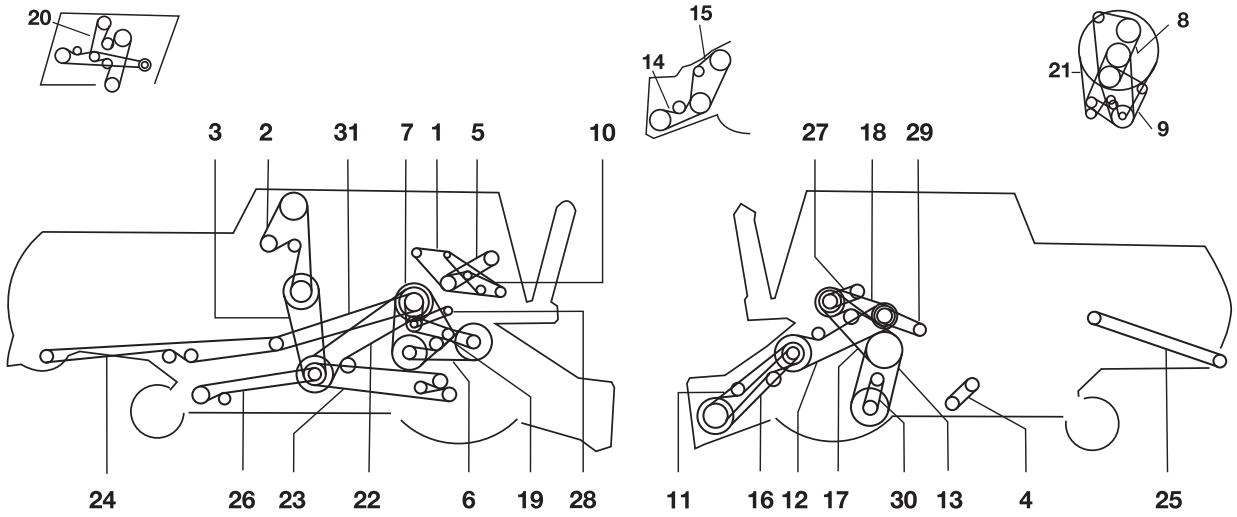

			OE	
1	ALTERNATOR AND WATERPUMP DRIVE (DIESEL ENGINE)	1	AR41576	0173245
1	ALTERNATOR AND WATERPUMP DRIVE (GAS ENGINE)	1	H80896	0200107
1	ALTERNATOR AND WATERPUMP DRIVE (DIESEL ENGINE)	1	H82724	0200107
1	ALTERNATOR AND WATERPUMP DRIVE 404TH-01	1	R70871	0200118
1	ALTERNATOR AND WATERPUMP DRIVE 404TH-01	1	H79236	1400119
1	ALTERNATOR AND WATERPUMP DRIVE 404DH-04	1	R52507	0172253
2	CLEAN GRAIN ELEVATOR U-JOINT LOADING AUGER	1	H23950	0202235
3	CLEAN GRAIN ELEVATOR COUNTERSHAFT	1	H27433	0102174
4	CLEANING FAN DRIVE	1	H108668	0210144
5	AIR CONDITIONING COMPRESSOR DRIVE 404DH-04	1	H87459	0172211
5	AIR CONDITIONING COMPRESSOR DRIVE (GAS ENGINE)	1	H80897	0172230
5	AIR CONDITIONING COMPRESSOR DRIVE 404TH-01	1	H80896	0200107
5	AIR CONDITIONING COMPRESSOR DRIVE 404TH-01	1	R71603	0172214
6	CYLINDER N=280-845 RPM	3	AH80505	0201191
6	CYLINDER N=407-1228 RPM	3	AH80503	1401199
6	CYLINDER N=287-873 RPM SLOW SPEED INTERMEDIATE SPEED	1	H96423	0224234
6	CYLINDER N=414-1250 RPM	1	H96408	0224243 EE-TECH
7	CYLINDER - INTERMEDIATE SHAFT	1	H113749	0213197
8	ENGINE FAN DRIVE	1	H86271	0372258
9	ENGINE FAN AND ROTARY SCREEN DRIVE SHAFT 404DH-04	1	H137207	0172230
9	ENGINE FAN AND ROTARY SCREEN DRIVE SHAFT 404TH-01	1	H86273	0372232
10	ENGINE FAN COUNTERSHAFT 404TH-01	1	H84745	0172253
10	ENGINE FAN COUNTERSHAFT 404DH-01	1	H79235	0272247
11	FEEDER CONVEYOR (REGULAR FEEDER HOUSE)	1	H77766	0202300
11	FEEDER CONVEYOR (LONG FEEDER HOUSE)	1	H125380	1402358
12	PLATFORM AND FEEDER HOUSE (UPPER)	1	H76030	0210254
12	PLATFORM AND FEEDER HOUSE VARIABLE SPEED (UPPER)	1	H23927	1903244
13	HYDROSTATIC PROPULSION DRIVE (LOWER)	2	AH84633	0203206
13	PROPULSION POSI-TORQUE (LOWER)	1	H75846	0213224

7700 (CONTINUED)

			OE	
14	PLATFORM AND CORN HEAD	3	AH76154	1402158
14	PLATFORM AND CORN HEAD LOWER VARIABLE	3	AH89436	0202168
14	PROPULSION DRIVE (LOWER)	1	H75846	0213224
15	PLATFORM AND CORN HEAD MIDDLE VARIABLE	1	P46553	/
15	PLATFORM AND CORN HEAD MIDDLE VARIABLE	1	H84441	0211250
16	PLATFORM AND FEEDER HOUSE LOWER REGULAR	1	H77765	0203300
16	PLATFORM AND FEEDER HOUSE LOWER LONG	1	H79796	0203351
17	HYDROSTATIC PROPULSION DRIVE (UPPER)	2	AH84633	0203206
17	PROPULSION POSI-TORQUE (UPPER) 404D	2	AH21301	0203218
17	PROPULSION POSI-TORQUE (UPPER) 404T	2	AH87127	1403222
17	PROPULSION DRIVE (UPPER)	1	H75846	0213224
18	COUNTERSHAFT (PRIMARY)	1	H84462	0244253
18	COUNTERSHAFT (PRIMARY) 404TH-01	1	H108175	0244255
18	COUNTERSHAFT (PRIMARY)	2	AH75638	0203169
19	ROTARY DEFLECTOR	1	H86039	1900132
19	ROTARY DEFLECTOR	1	H86061	0200143
20	CLEAN GRAIN ELEVATOR DRIVE	1	H77766	0202300
21	ROTARY SCREEN DRIVE	1	H86259	0242268
22	COUNTERSHAFT (SECONDARY)	1	H77019	0203273
23	SHOE SUPPLY AUGERS (GRAIN)	1	H77010	1402336
24	STRAW CHOPPER DRIVE (REAR)	1	H79789	1402433
25	STRAW SPREADER DRIVE	1	H26858	1401275
26	TAILINGS AUGER (LOWER)	1	N110085	0302251
27	UNLOADING AUGER COUNTERSHAFT	1	H76150	0202126
27	UNLOADING AUGER COUNTERSHAFT 404TH-01	1	H84424	0203132
29	HYDROSTATIC REEL PUMP	1	H77683	1900095
30	HYDROSTATIC CHARGE PUMP DRIVE	1	T12042	0273215
30	HYDROSTATIC CHARGE PUMP DRIVE	1	T199T	0173214
31	STRAW CHOPPER DRIVE	1	H80103	0202261
32		1	AR41628	0200105
33		1	H84740	0372262

7720

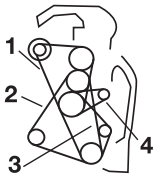

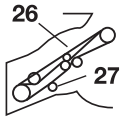

LONG

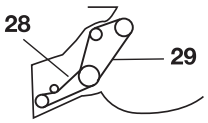

SIDEHILL

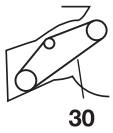

VARIABLE DRIVE



REG. FIXED LESS REV.

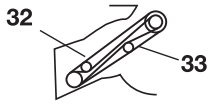

REGULAR FIXED

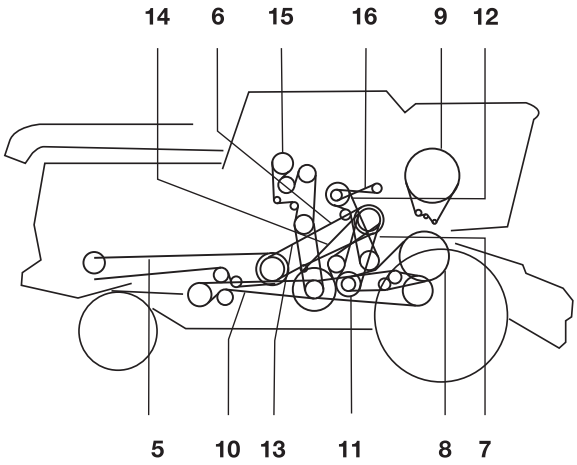

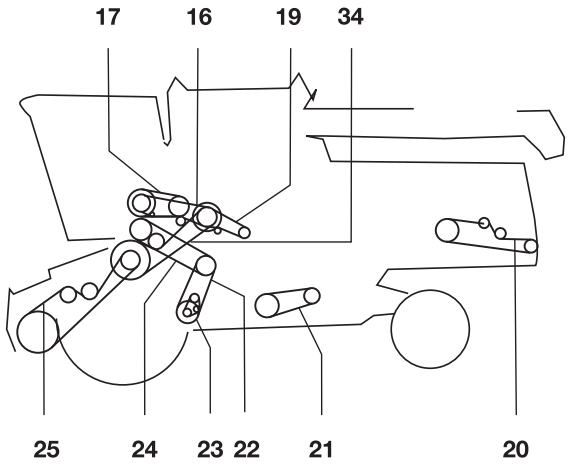

			OE	
1	ALTERNATOR AND WATERPUMP DRIVE	1	H79236	1400119
2	AIR CONDITIONING COMPRESSOR DRIVE	1	H113565	0172219
2	AIR CONDITIONING COMPRESSOR DRIVE	1	R71603	0172214
3	FAN DRIVE	1	H86271	0372258
4	ROTARY SCREEN DRIVE	1	H86273	0372232
5	ROTARY SCREEN DRIVE	1	H86259	0242268
6	COUNTERSHAFT (UPPER) 2480 MM	1	P49415	0102189
7	COUNTERSHAFT 2650 MM (LOWER)	1	E60212	0302200
8	STRAW CHOPPER DRIVE (REAR)	1	H103344	0202528
9	STRAW CHOPPER DRIVE	1	H101436	0202261
10	TORQUE-SENSING COUNTERSHAFT DRIVE	1	H113749	0213197
11	CYLINDER - 3-BANDED (N=315-830 RPM)	1	H96423	0224234
11	CYLINDER - 4-BANDED (OPTIONAL)	1	H96422	0225245 EE-TECH
11	CYLINDER - 4-BANDED (STANDARD)	1	H110375	0325248
12	CYLINDER - 3-BANDED	1	H96408	0224243 EE-TECH
12	CLEAN GRAIN ELEVATOR AND LOADING	1	H77766	0202300
13	CLEAN GRAIN ELEVATOR COUNTERSHAFT	1	H27433	0102174
14	COUNTERSHAFT (SECONDARY)	1	H81222	0702292
14	COUNTERSHAFT (SECONDARY)	1	H110300	0702295
15	SHOE SUPPLY AUGERS	1	H77010	1402336
16	TAILINGS AUGER DRIVE	1	H118730	2002253
17	BEATER (100 % BEATER SPEED)	1	H96414	0202139

7720 (CONTINUED)

			OE	
17	BEATER (150 % BEATER SPEED)	1	H101469	0302146
18	FEEDER HOUSE DRIVE	1	H76030	0210254
19	FEEDER CONVEYOR DRIVE	1	H125380	1402358
20	FEEDER HOUSE (LOWER)	1	H79796	0203351
21	FEEDER HOUSE DRIVE	1	H76030	0210254
22	FEEDER CONVEYOR DRIVE	1	H77766	0202300
23	DRIVE (LOWER)	1	H77765	0203300
24	UNLOADING AUGER DRIVE	2	AH96300	0102129
25	FEEDER HOUSE DRIVE	1	H23927	1903244
26	FEEDER HOUSE - LOWER (REGULAR)	1	H111519	0703313
26	FEEDER HOUSE - LOWER (LONG)	1	H97929	0203366
27	MULTI-GROOVE SEPARATOR DRIVE	1	H108175	0244255
28	FEEDER HOUSE DRIVE	1	H76030	0210254
29	DRIVE (LOWER)	1	Z30130	0203295
30	CLEANING FAN DRIVE	1	H108669	0210149
31	FEEDER HOUSE DRIVE CONVEYOR	1	H110921	0211317
32	FEEDER HOUSE DRIVE	1	H23927	1903244
33	STRAW SPREADER (FRONT)	1	H112421	0201258
34	GROUND DRIVE (UPPER)	2	AH87127	1403222
35	GROUND DRIVE (LOWER)	1	H75846	0213224
36	GROUND DRIVE (UPPER)	2	AH84633	0203206
37	GROUND DRIVE (UPPER)	1	H137207	0172230
38	GROUND DRIVE (LOWER)	2	AH84633	0203206
39	HYDROSTATIC CHARGE PUMP DRIVE	1	T32517	0273217
39	HYDROSTATIC CHARGE PUMP DRIVE	1	T199T	0173214

7721

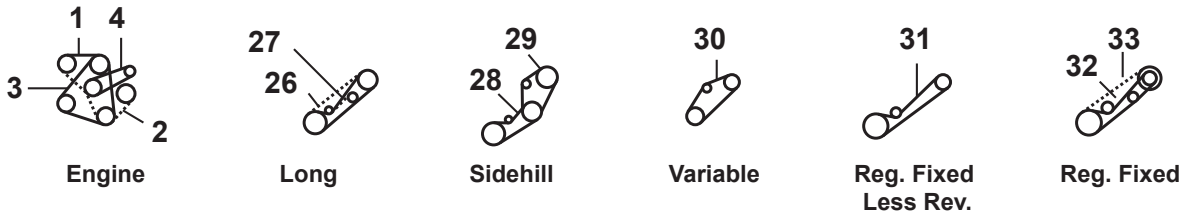

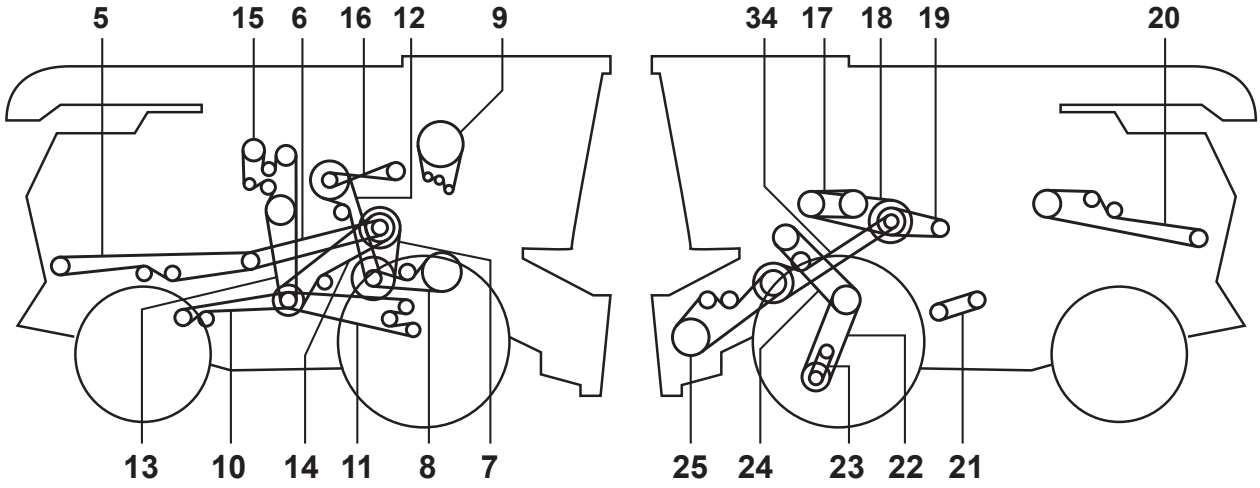

			OE	
1	REAR STRAW CHOPPER DRIVE	1	H103344	0202528
2	STRAW CHOPPER DRIVE	1	H101436	0202261
3	COUNTERSHAFT DRIVE TORQUE SENSING	1	H113749	0213197
4	STANDARD CYLINDER 4 BAND (350 - 700 RPM & 620 - 1240 RPM)	1	H110375	0325248
4	CYLINDER 4 BAND (390 - 1030 RPM or 450 - 1200 RPM)	1	H96422	0225245 EE-TECH
4	OPTIONAL CYLINDER 4 BAND (280 - 560 RPM & 500 - 1000 RPM)	1	H96422	0225245 EE-TECH
4	CYLINDER 4 BAND (315 - 830 RPM)	1	H96421	0225236
5	TAILINGS AUGER DRIVE	1	H118730	2002253
6	SHOE SUPPLY AUGER DRIVE	1	H77010	1402336
7	BEATER (100 % BEATER SPEED - CORN & BEAN)	1	H96414	0202139
7	BEATER (150 % BEATER SPEED - GRAIN & RICE)	1	H101469	0302146
8	CLEAN GRAIN ELEVATOR COUNTERSHAFT	1	H27433	0102174
9	CLEAN GRAIN ELEVATOR, LOADING AUGER	1	H77766	0202300
9	CLEAN GRAIN ELEVATOR, LOADING AUGER	1	H23950	0202235
10	HYDRAULIC REEL PUMP DRIVE	1	H86274	0372223
11	STRAW SPREADER DRIVE	1	H112421	0201258
12	CLEANING FAN DRIVE	1	H108669	0210149
13	FEEDER HOUSE DRIVE, LOWER (REGULAR FIXED)	1	H77765	0203300
14	FEEDER HOUSE CONVEYOR DRIVE (REGULAR FIXED)	1	H77766	0202300
15	FEEDER HOUSE DRIVE	1	H76030	0210254

7722

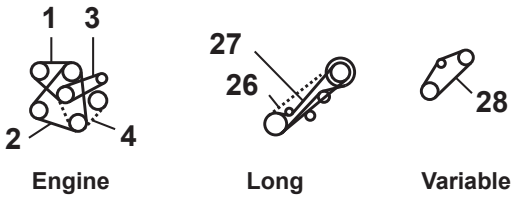

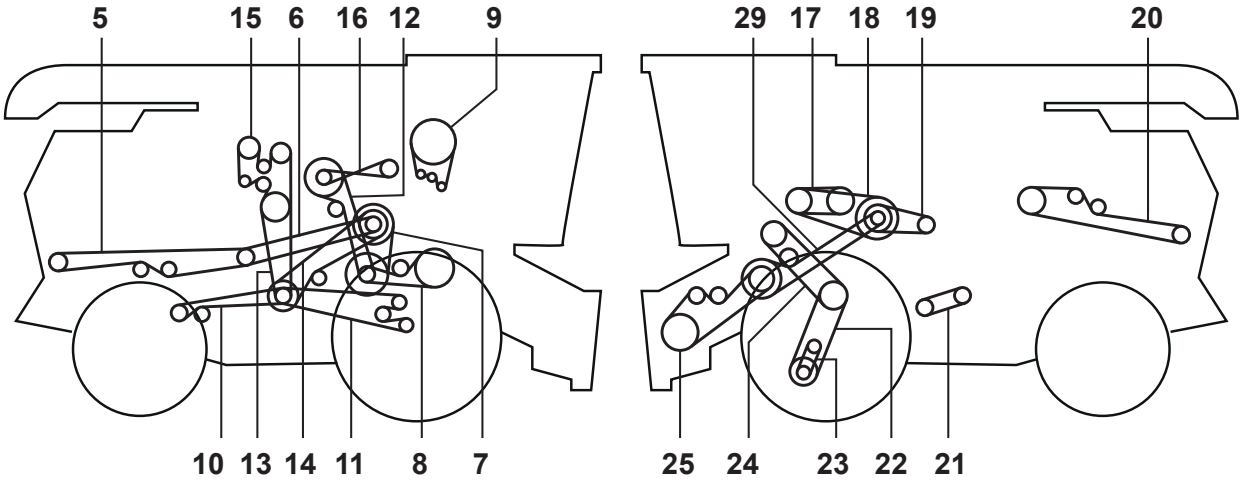

			OE	
1	ALTERNATOR & WATERPUMP	1	H86271	0372258
2	ROTARY SCREEN	1	H86273	0372232
3	COMPRESSOR	1	H122189	0272215
4	FAN & HYDRAULIC PUMP	2	AH96333	0201191
5	HYDRAULIC GROUND DRIVE, LOWER	1	HAN1220	☎
6	HYDRO CHARGE PUMP	1	T32517	0273217
7	HYDRAULIC GROUND DRIVE, UPPER	2	AH84633	0203206
8	FEEDER HOUSE DRIVE, LOWER	1	H111519	0703313
9	FEEDER HOUSE DRIVE, UPPER	1	H97929	0203366
9	FEEDER HOUSE DRIVE (LONG, REGULAR)	1	H23927	1903244

8820

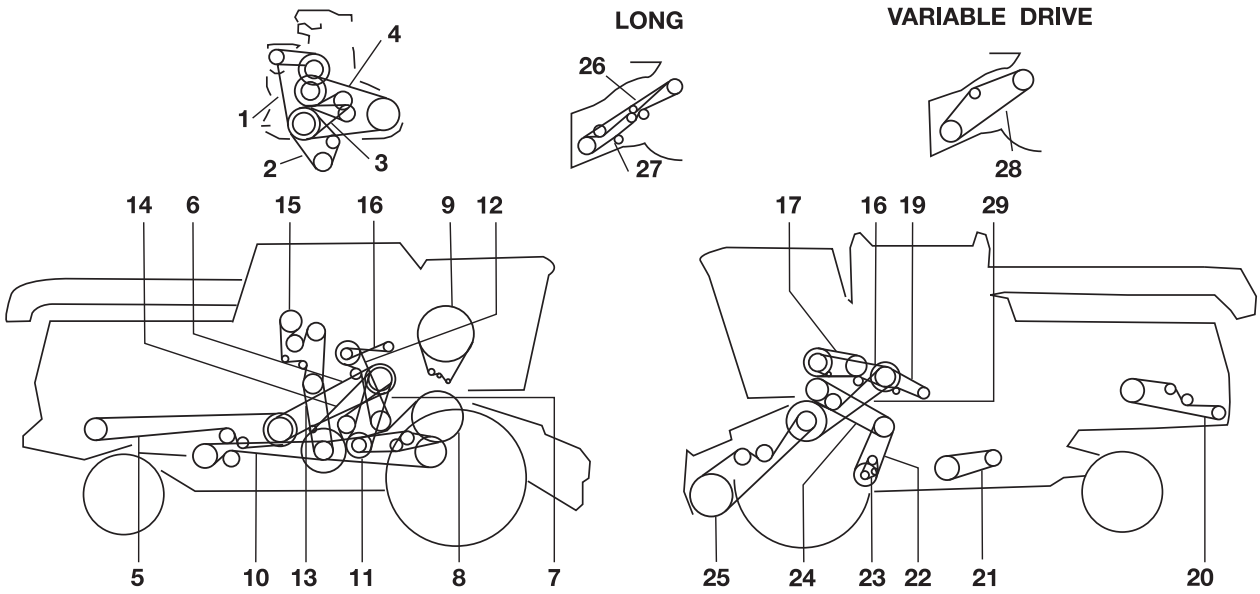

			OE	
1	FAN AND HYDRAULIC PUMP	2	AH96333	0201191
2	COMPRESSOR DRIVE	1	R71603	0172214
3	ROTARY SCREEN DRIVE	1	H86273	0372232
4	ALTERNATOR AND WATERPUMP DRIVE	1	H79236	1400119
4	ALTERNATOR AND WATERPUMP DRIVE	1	H86271	0372258
5	ROTARY SCREEN DRIVE	1	H86259	0242268
6	STRAW CHOPPER DRIVE (REAR)	1	H103344	0202528
7	STRAW CHOPPER DRIVE	1	H101436	0202261
8	TORQUE-SENSING COUNTERSHAFT DRIVE	1	H113749	0213197
9	CYLINDER - (4-BANDED) (N=315-830 RPM)	1	H96421	0225236
9	CYLINDER - 4-BANDED (OPTIONAL)	1	H96422	0225245 EE-TECH
9	CYLINDER - 4-BANDED (STANDARD)	1	H110375	0325248
10	CLEAN GRAIN ELEVATOR AND LOADING	1	H77766	0202300
11	CLEAN GRAIN ELEVATOR COUNTERSHAFT	1	H27433	0102174
12	COUNTERSHAFT (SECONDARY)	1	H81222	0702292
12	COUNTERSHAFT (SECONDARY)	1	H110300	0702295
13	SHOE SUPPLY AUGERS	1	H77010	1402336
14	TAILINGS AUGER DRIVE	1	H118730	2002253
15	BEATER (100 % BEATER SPEED)	1	H96414	0202139
15	BEATER (150 % BEATER SPEED)	1	H101469	0302146
16	FEEDER HOUSE DRIVE	1	H76030	0210254
17	FEEDER CONVEYOR DRIVE	1	H125380	1402358
18	FEEDER HOUSE (LOWER)	1	H79796	0203351
19	UNLOADING AUGER DRIVE	2	AH96300	0102129
20	FEEDER HOUSE DRIVE	1	H23927	1903244
21	FEEDER HOUSE (LOWER)	1	H97929	0203366
22	MULTI-GROOVE SEPARATOR DRIVE	1	H108175	0244255

8820 (CONTINUED)

			OE	
23	FEEDER HOUSE DRIVE	1	H76030	0210254
24	DRIVE (LOWER)	1	H79796	0203351
25	CLEANING FAN DRIVE	1	H108669	0210149
26	FEEDER HOUSE DRIVE CONVEYOR	1	H110921	0211317
27	FEEDER HOUSE DRIVE	1	H23927	1903244
28	STRAW SPREADER (FRONT)	1	H112421	0201258
29	GROUND DRIVE (UPPER)	2	AH84633	0203206
30	GROUND DRIVE, UPPER (SN -625400)	1	H86275	0172228
30	GROUND DRIVE, UPPER (SN 625401- 0	1	H137207	0172230
31	GROUND DRIVE (LOWER)	2	AH84633	0203206
32	HYDROSTATIC CHARGE PUMP DRIVE	1	T32517	0273217

9400

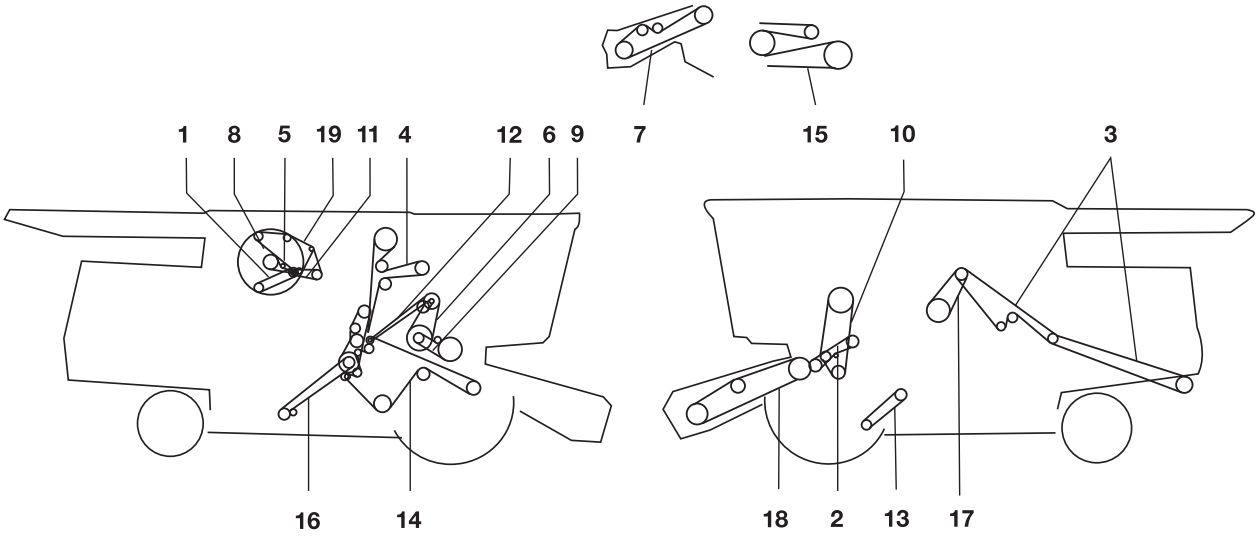

			OE	
1	COOLING FAN	1	H132809	2601106
2	ROTARY SCREEN DRIVE	1	H143869	1400264
3	ROTARY SCREEN DRIVE	1	H134216	/
4	AIR CONDITIONING COMPRESSOR DRIVE	1	H134772	0372244
5	CLEAN GRAIN ELEVATOR DRIVE	1	H137830	2602605
6	CYLINDER DRIVE INTERMEDIATE	1	H115759	0215195
6	CLEAN GRAIN ELEVATOR DRIVE	1	H141167	0202610
6	FOR EXTENDED RANGE	1	H137670	0251265
7	CYLINDER DRIVE, SLOW SPEED	1	H118618	0325248
7	CYLINDER DRIVE REGULAR DUAL RANGE	1	H115881	1425257
8	TAILINGS AUGER AND ELEVATOR (LOWER)	1	N110085	0302251
9	FOR ALTERNATOR	2	H145026	0372245
9	FOR ALTERNATOR	2	RE44538	0372245
10	COUNTERSHAFT (SECONDARY)	1	H128010	2002365
11	STRAW WALKER SHOE - CONVEYOR AUGERS	1	H131169	0202493
12	UNLOADING SYSTEM	1	AH127866	0302179
13	SHORT REAR	1	L4276N	0202168
13	LONG REAR	1	H101436	0202261
13	STRAW CHOPPER DRIVE, FRONT	1	H125380	1402358
14	REGULAR	1	H140404	0210213
14	SLOW SPEED	1	H137264	0203187
15	HEADER AND REEL PUMP	1	H125565	0203321
15	HEADER AND REEL PUMP	1	H140160	1403325
16	FEEDER DRIVE VARIABLE SPEED	1	H125711	0211357
17	BEATER (75 % BEATER SPEED)	1	AH131960	0302146
17	BEATER (100 % BEATER SPEED)	2	AH139436	0702151
18	FEEDER HOUSE FIXED SPEED WITH REVERSER	1	H126345	0203351
19	STRAW SPREADER DRIVE	1	Z33774	1401336

9410

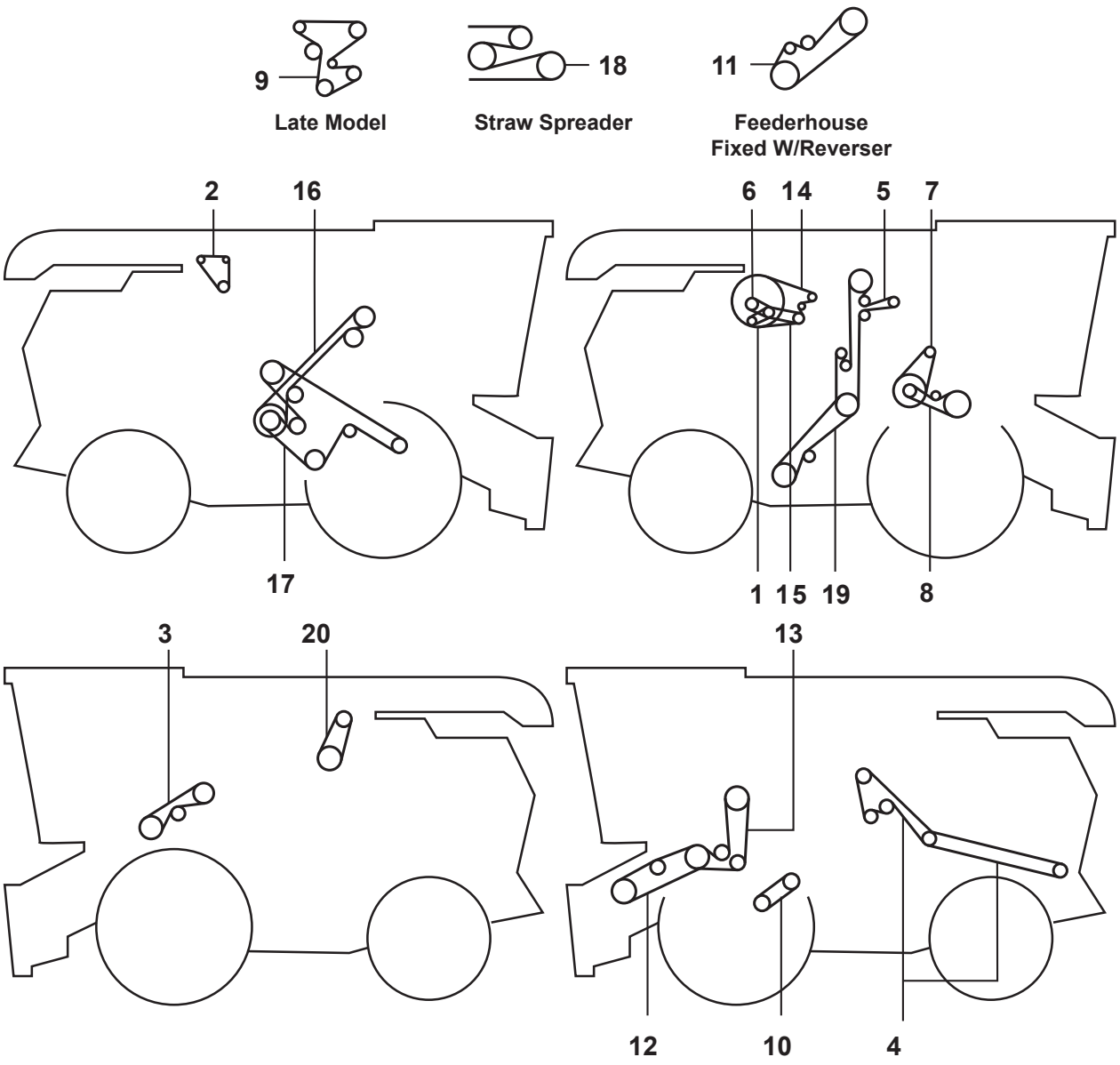
9
Late Model
18
Straw Spreader
11
Feederhouse
Fixed W/Reverser
2
16
17
6
14
5
7
1
15
19
8
3
20
13
12
10
4

9410 (CONTINUED)

			OE	
1	AIR CONDITIONING COMPRESSOR DRIVE	1	H80896	0200107
2	AIR FLOW DRIVE	1	H164452	2001086
3	ALTERNATOR, ENGINE	2	H101813	0200110
4	BEATER DRIVE (75 %)	2	AH163931	1602150
5	BEATER DRIVE (100 %)	2	AH139436	0702151
6	CHOPPER IN WINDROW OR FORWARD POSITION	1	H27433	0102174
7	CHOPPER IN REAR (OPERATING) POSITION	1	H101436	0202261
8	CLEAN GRAIN ELEVATOR	1	H160171	0202610
9	COOLING FAN, LOW POWER	1	H132809	2601106
10	COOLING FAN, HIGH POWER	1	H132808	0201108
11	CYLINDER DR. REGULAR DUAL RANGE & SINGLE RANGE	1	H115881	1425257
12	CYLINDER INTERMEDIATE DRIVE BELT	1	H210476	0215195
13	ENGINE FAN	1	H132808	0201108
14	FEEDER HOUSE VARIABLE SPEED	1	H161648	0211357
15	FIXED SPEED FEEDER HOUSE WITH REVERSER	1	H126345	0203351
16	FOR EXTENDED RANGE	1	H137670	0251265
17	FOR EXTENDED RANGE	1	H145994	0225253 EE-TECH
18	HEADER AND REEL PUMP	1	H151952	1403325
19	LOWER TAILINGS AUGER & ELEVATOR	1	N110085	0302251
20	ROTARY SCREEN	1	H145158	1400286
21	ROTARY SCREEN DRIVE	1	H146636	0217106
22	SECONDARY COUNTERSHAFT	1	H128010	2002365
23	SHOE, STRAW WALKER & CONVEYOR AUGERS	1	H131169	0202493
24	STRAW CHOPPER DRIVE, FRONT	1	H125380	1402358
25	STRAW CHOPPER DRIVE, REGULAR	1	H140404	0210213
26	STRAW CHOPPER DRIVE, SLOW SPEED	1	H137264	0203187
27	STRAW SPREADER	1	Z33774	1401336
28	UNLOADING SYSTEM	2	AH158880	0102181

9450

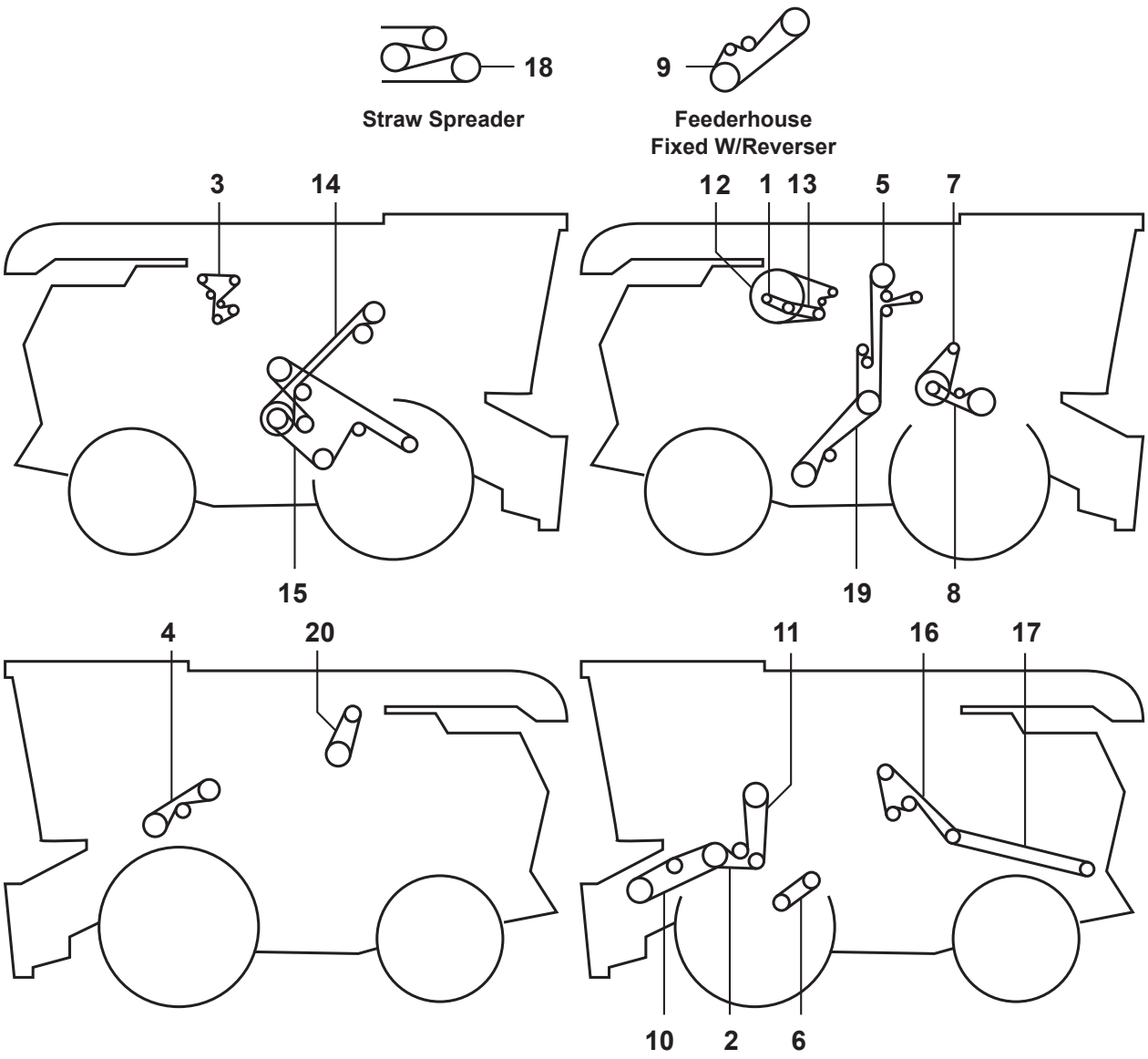
18
Straw Spreader
9
Feederhouse
Fixed W/Reverser
3
14
15
12
1
13
5
7
19
8
4
20
11
16
17
10
2
6

9450 (CONTINUED)

			OE	
0	AIR CONDITIONING COMPRESSOR DRIVE	1	H101813	0200110
1	COOLING FAN	1	H132808	0201108
2	AIR FLOW DRIVE	1	H171386	0301211
3	ALTERNATOR (95 AMP)	1	H163515	0285325
3	ALTERNATOR (185 AMP)	1	H166870	0285327
4	BEATER DRIVE (75%)	2	AH163931	1602150
4	BEATER DRIVE (100%)	2	AH139436	0702151
5	CLEAN GRAIN ELEVATOR	1	H141166	1402609
6	CLEANING FAN (750 - 1350 RPM)	1	H152146	0210220
6	CLEANING FAN (490 - 980 RPM)	1	H152180	1410203
7	CYLINDER INTERMEDIATE DRIVE (150 - 980RPM)	1	H210476	0215195
7	CYLINDER INTERMEDIATE DRIVE (300 - 1000RPM)	1	H137670	0251265
8	CYLINDER DRIVE (240 - 960 RPM) (STANDARD)	1	H115881	1425257
8	CYLINDER DRIVE (EXTENDED RANGE)	1	H145994	0225253 EE-TECH
9	FEEDER HOUSE W/REVERSER FIXED SPEED (-700101)	1	H126345	0203351
9	FEEDER HOUSE W/REVERSER FIXED SPEED (700101-)	1	H156796	0203363
10	FEEDER HOUSE VARIABLE SPEED (-700100)	1	H161648	0211357
10	FEEDER HOUSE VARIABLE SPEED (700101-)	1	H205167	0211362
11	HEADER AND REEL PUMP (STANDARD CAPACITY)	1	H151952	1403325
12	ROTARY SCREEN (-695101)	1	H145158	1400286
12	ROTARY SCREEN (695101-)	1	H175632	0200285
13	ROTARY SCREEN DRIVE	1	H146636	0217106
14	COUNTERSHAFT SECONDARY	1	H128010	2002365
15	SHOE, WALKER, AND CONVEY OR AUGERS	1	H131169	0202493
16	STRAW CHOPPER (FRONT)	1	H157726	0223404 EE-TECH
17	STRAW CHOPPER (LONG REAR)	1	H101436	0202261
17	STRAW CHOPPER (SHORT REAR)	1	H27433	0102174
18	STRAW SPREADER	1	Z33774	1401336
19	TAILINGS AUGER & ELEVATOR, LOWER	1	N110085	0302251
20	UNLOADING SYSTEM	2	AH158880	0102181

9500

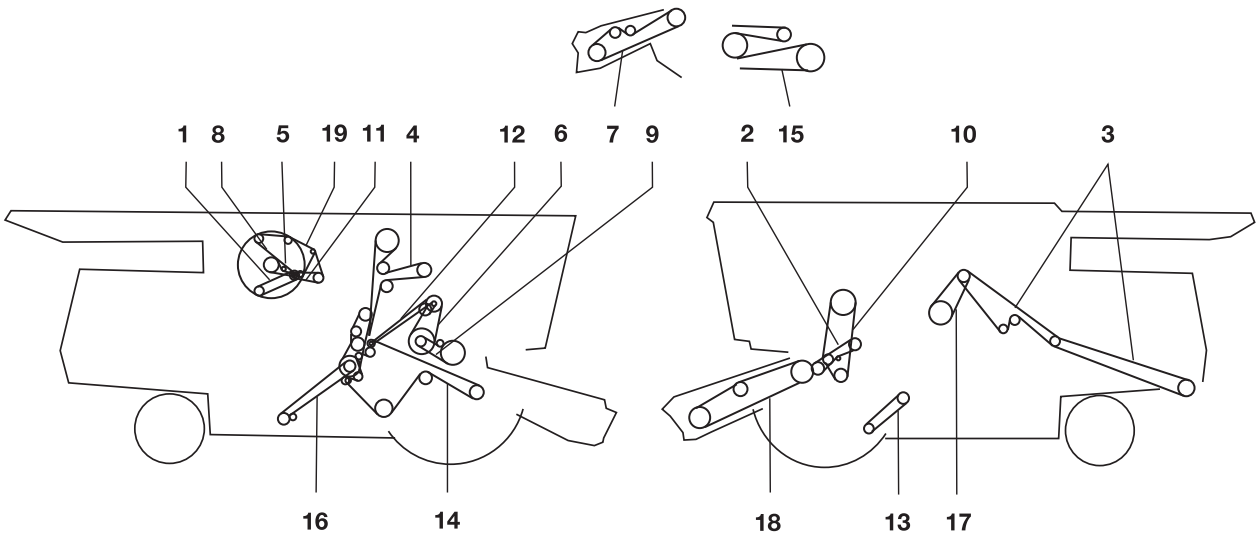

			OE	
1	COOLING FAN	1	H132808	0201108
2	ROTARY SCREEN DRIVE	1	H143869	1400264
3	ROTARY SCREEN DRIVE	1	H134216	/
4	AIR CONDITIONING COMPRESSOR DRIVE	1	H134437	0372245
5	CLEAN GRAIN ELEVATOR DRIVE	1	H137830	2602605
5	CLEAN GRAIN ELEVATOR DRIVE	1	H141167	0202610
6	CYLINDER DRIVE INTERMEDIATE	1	H115759	0215195
6	FOR EXTENDED RANGE	1	H137670	0251265
7	CYLINDER DRIVE, SLOW SPEED	1	H118618	0325248
7	CYLINDER DRIVE REGULAR DUAL RANGE	1	H115881	1425257
8	TAILINGS AUGER AND ELEVATOR (LOWER)	1	N110085	0302251
9	FOR ALTERNATOR	1	H134344	0172217
10	COUNTERSHAFT (SECONDARY)	1	H128010	2002365
11	STRAW WALKER SHOE - CONVEYOR AUGERS	1	H131169	0202493
12	UNLOADING SYSTEM	1	AH127866	0302179
13	SHORT REAR	1	P47885	0702292
13	LONG REAR	1	H125381	0202332
13	(FRONT)	1	H125380	1402358
14	REGULAR	1	H140404	0210213
14	SLOW SPEED	1	H137264	0203187
15	HEADER AND REEL PUMP	1	H125565	0203321
15	HEADER AND REEL PUMP	1	H140160	1403325
16	FEEDER DRIVE VARIABLE SPEED	1	H125711	0211357
17	BEATER OPTIONAL (75 %)	1	AH131960	0302146
17	BEATER (100 % BEATER SPEED)	2	AH139436	0702151
18	FEEDER HOUSE FIXED SPEED WITH REVERSER	1	H126345	0203351
19	STRAW SPREADER DRIVE	1	H128234	1401412

9500 SIDE HILL

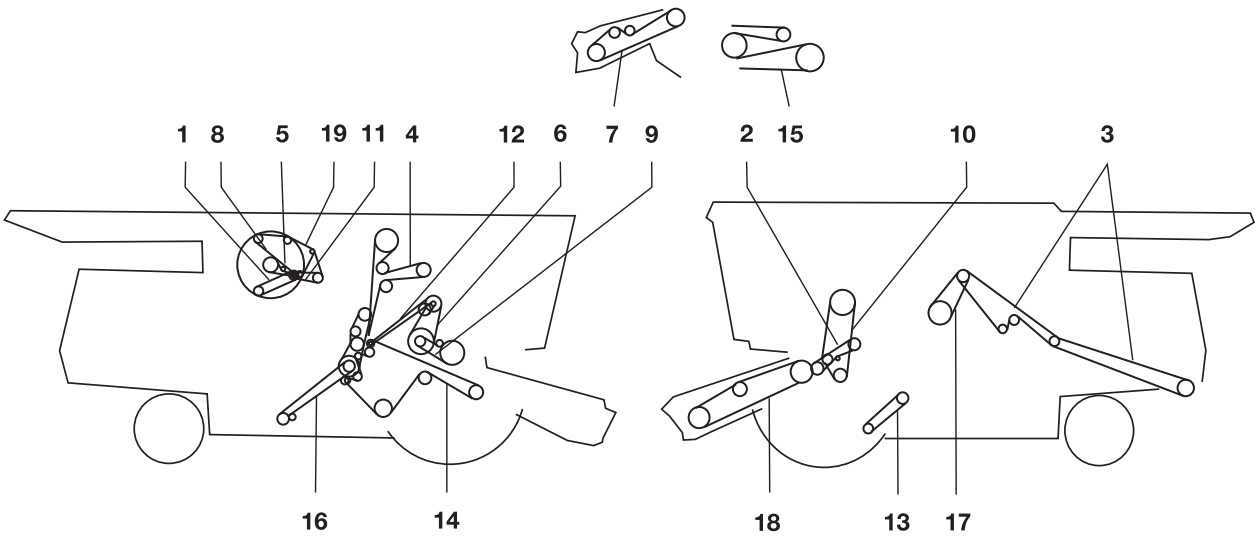

			OE	
1	AIR CONDITIONING COMPRESSOR DRIVE	1	H81742	1472236
1	AIR CONDITIONING COMPRESSOR DRIVE	1	H80896	0200107
2	SECONDARY COUNTERSHAFT	1	H128010	2002365
3	ALTERNATOR	1	H101813	0200110
3	ALTERNATOR (LOW POWER)	1	H134344	0172217
3	ALTERNATOR	1	R73189	0272218
4	CLEAN GRAIN ELEVATOR	1	H137830	2602605
4	CLEAN GRAIN ELEVATOR	1	H141167	0202610
5	CYLINDER INTERMEDIATE DRIVE	1	H210476	0215195
6	CYLINDER DRIVE (SINGLE & DUAL RANGE)	1	H115881	1425257
6	CYLINDER DRIVE (SLOW SPEED)	1	H118618	0325248
7	TAILINGS AUGER & ELEVATOR, LOWER	1	N110085	0302251
8	ROTARY SCREEN DRIVE	1	H134216	/
8	ROTARY SCREEN DRIVE	1	H146636	0217106
9	SHOE, STRAW WALKER AND CONVEYOR AUGERS	1	H131169	0202493
10	COOLING FAN, HIGH POWER	1	H153297	0223148
11	ROTARY SCREEN DRIVE	1	H143869	1400264
11	ROTARY SCREEN DRIVE	1	H145158	1400286
12	UNLOADING SYSTEM	2	AH158880	0102181
13	SEPARATOR FAN, SLOW SPEED	1	H137264	0203187
13	SEPARATOR FAN, SLOW SPEED	1	H152180	1410203
13	SEPARATOR FAN, REGULAR SPEED	1	H140404	0210213
13	SEPARATOR FAN, REGULAR SPEED	1	H152146	0210220
14	FEEDER HOUSE, VARIABLE SPEED	1	H161648	0211357
15	BEATER DRIVE (75 % BEATER SPEED)	2	AH163931	1602150
15	BEATER DRIVE (100 % BEATER SPEED)	2	AH139436	0702151
16	HEADER AND REEL PUMP	1	H125565	0203321
16	HEADER AND REEL PUMP	1	H151952	1403325
17	FRONT CHOPPER DRIVE	1	H125380	1402358
17	CHOPPER IN REAR (OPERATING) POSITION	1	H125381	0202332
17	CHOPPER IN WINDROW OR FORWARD POSITION	1	H23950	0202235
17	CHOPPER IN WINDROW OR FORWARD POSITION	1	P47885	0702292
18	STRAW SPREADER	1	H128234	1401412
19	FEEDERHOUSE, FIXED WITH REVERSER	1	H126345	0203351

9501

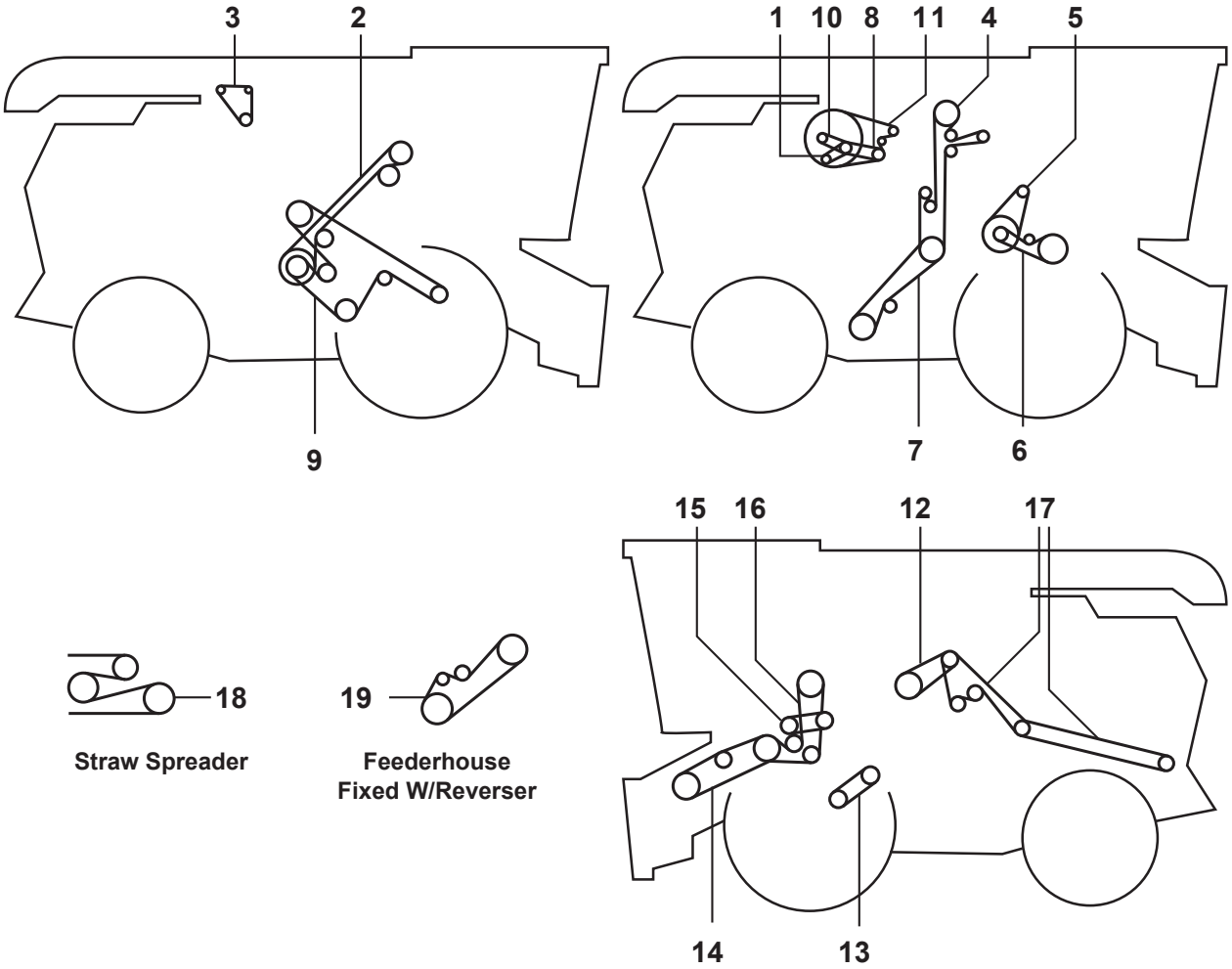

			OE	
1	SECONDARY COUNTERSHAFT	1	H128010	2002365
2	CLEAN GRAIN ELEVATOR	1	H137830	2602605
3	CYLINDER INTERMEDIATE DRIVE	1	H210476	0215195
4	CYLINDER DRIVE REGULAR DUAL & SINGLE RANGE	1	H115881	1425257
5	TAILINGS AUGER & ELEVATOR, LOWER	1	N110085	0302251
6	SHOE, STRAW WALKER AND CONVEYOR AUGERS	1	H131169	0202493
7	UNLOADING SYSTEM	2	AH158880	0102181
8	SEPARATOR FAN, SLOW SPEED	1	H137264	0203187
8	SEPARATOR FAN, REGULAR SPEED	1	H140404	0210213
9	BEATER DRIVE (100 % BEATER SPEED)	2	AH139436	0702151
10	HEADER AND REEL PUMP	1	H151952	1403325
11	FRONT CHOPPER DRIVE	1	H125380	1402358
11	REAR CHOPPER, LONG	1	H125381	0202332
11	REAR CHOPPER, SHORT	1	P47885	0702292
12	STRAW SPREADER	1	H128234	1401412
13	FEEDERHOUSE, FIXED WITH REVERSER	1	H126345	0203351

9510

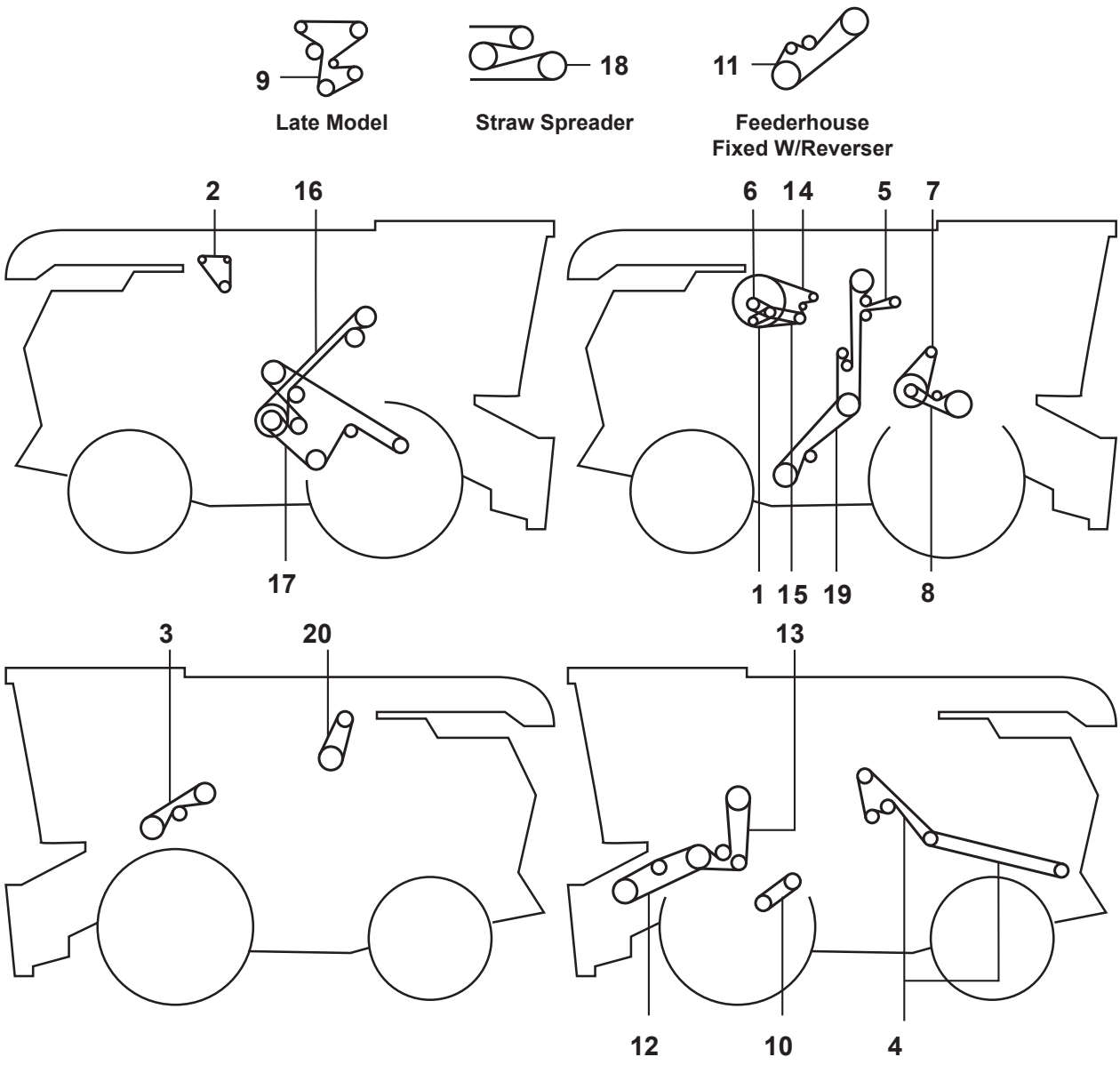
9
Late Model
18
Straw Spreader
11
Feederhouse
Fixed W/Reverser
2
16
17
6
14
5
7
1
15
19
8
3
20
13
12
10
4

9510 (CONTINUED)

			OE	
1	AIR CONDITIONING COMPRESSOR DRIVE	1	H80896	0200107
2	ALTERNATOR	1	H101813	0200110
3	BEATER DRIVE (75 %)	2	AH163931	1602150
3	BEATER DRIVE (100 %)	2	AH139436	0702151
4	CHOPPER, FRONT	1	H125380	1402358
4	CHOPPER, WINDROW OR FORWARD POSITION	1	H23950	0202235
4	CHOPPER, REAR POSITION	1	H125381	0202332
5	CLEAN GRAIN ELEVATOR	1	H160171	0202610
6	COOLING FAN, HIGH POWER	1	H160405	0223139
6	COOLING FAN, LOW POWER	1	H161795	0223137
6	COOLING FAN, LOW POWER	1	H132808	0201108
7	CYLINDER INTERMEDIATE DRIVE	1	H210476	0215195
8	CYLINDER DRIVE, REGULAR DUAL & SINGLE RANGE	1	H115881	1425257
8	CYLINDER DRIVE, SLOW SPEED	1	H118618	0325248
9	FAN DRIVE, REGULAR SPEED	1	H152180	1410203
9	FAN DRIVE, REGULAR SPEED	1	H152146	0210220
10	FEEDERHOUSE, FIXED SPEED WITH REVERSER	1	H126345	0203351
11	FEEDERHOUSE, VARIABLE SPEED	1	H161648	0211357
12	POWERSHIFT & REEL PUMP, HEADER	1	H151952	1403325
13	ROTARY SCREEN	1	H145158	1400286
14	ROTARY SCREEN DRIVE	1	H146636	0217106
15	SECONDARY COUNTERSHAFT	1	H128010	2002365
16	SHOE, STRAW WALKER & CONVEYOR AUGERS	1	H131169	0202493
17	STRAW SPREADER	1	H128234	1401412
17	STRAW SPREADER (DECK DRIVE)	1	M140021	0204221
18	TAILINGS AUGER & ELEVATOR, LOWER	1	N110085	0302251
19	UNLOADING SYSTEM	2	AH158880	0102181

9510 SIDE HILL

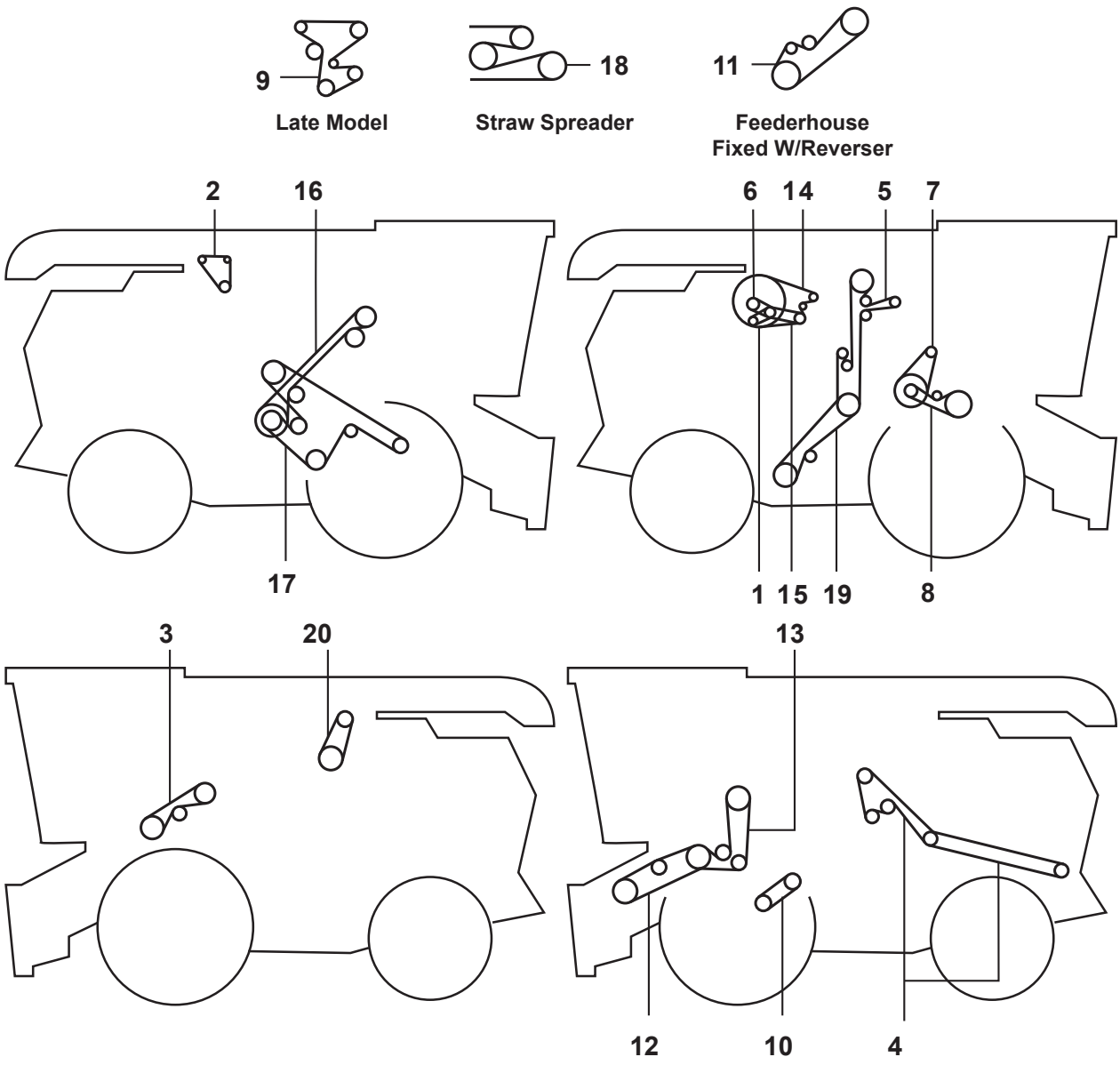

9510 SIDE HILL (CONTINUED)

			OE	
1	AIR CONDITIONING COMPRESSOR DRIVE	1	H80896	0200107
2	ALTERNATOR	1	H101813	0200110
3	BEATER DRIVE (75 %)	2	AH163931	1602150
3	BEATER DRIVE (100 %)	2	AH139436	0702151
4	CHOPPER, FRONT	1	H125380	1402358
4	CHOPPER, WINDROW OR FORWARD POSITION	1	H23950	0202235
4	CHOPPER, REAR OPERATING POSITION	1	H125381	0202332
5	CLEAN GRAIN ELEVATOR	1	H160171	0202610
6	COOLING FAN, HIGH POWER	1	H160405	0223139
6	COOLING FAN, LOW POWER	1	H161795	0223137
6	COOLING FAN, LOW POWER	1	H132808	0201108
7	CYLINDER INTERMEDIATE DRIVE	1	H210476	0215195
8	CYLINDER DRIVE, REGULAR DUAL & SINGLE RANGE	1	H115881	1425257
8	CYLINDER DRIVE, SLOW SPEED	1	H118618	0325248
9	FAN DRIVE, SLOW SPEED	1	H152180	1410203
9	FAN DRIVE, REGULAR SPEED	1	H152146	0210220
10	FEEDERHOUSE, FIXED SPEED WITH REVERSER	1	H126345	0203351
11	FEEDERHOUSE, VARIABLE SPEED	1	H161648	0211357
12	POWERSHIFT & REEL PUMP, HEADER	1	H151952	1403325
13	ROTARY SCREEN	1	H145158	1400286
14	ROTARY SCREEN DRIVE	1	H146636	0217106
15	SECONDARY COUNTERSHAFT	1	H128010	2002365
16	SHOE, STRAW WALKER & CONVEYOR AUGERS	1	H131169	0202493
17	STRAW SPREADER	1	H128234	1401412
17	STRAW SPREADER (DECK DRIVE)	1	M140021	0204221
18	TAILINGS AUGER & ELEVATOR, LOWER	1	N110085	0302251
20	UNLOADING SYSTEM	2	AH158880	0102181

9540 - 9560 - 9580 (EUROPE)

			OE	
1		1	H175632	0200285
2		1	H115881	1425257
3		1	H177263	1402609
4		1	N110085	0302251
5		1	H175742	0215195
6	9540	1	H177589	0200109
6	9560 / 9580	1	H146636	0217106
7	9540	1	H175467	0285264
7	9560 / 9580	1	H177186	0285333
8		1	H176765	0227482
10		1	H177177	0224390 EE-TECH
11		1	H152146	0210220
12		1	H176766	0227255
13	FOR HILLMASTER ONLY	1	H202821	0227262
16		2	AH139436	0702151
17		2	AH158880	0102181

9540(i) WTS - 9560(i) WTS - 9580(i) WTS

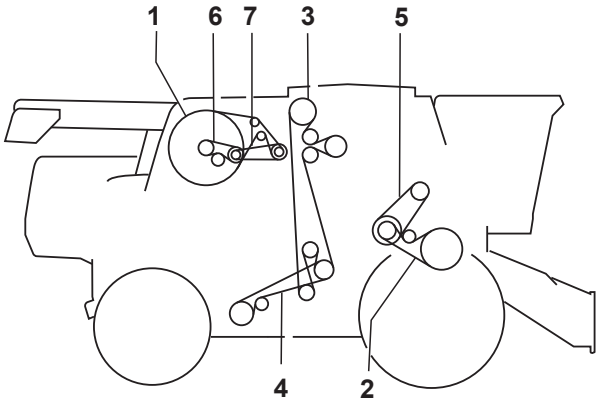

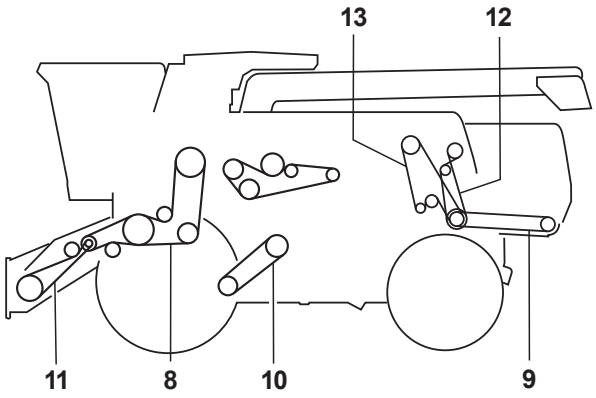

			OE	
1		1	H175632	0200285
2		1	H115881	1425257
3	(SUB FOR H177263)	1	HXE51300	0202609
4		1	N110085	0302251
5	(SUB FOR H210476)	1	HXE51101	0215195
6	(9540)	1	H175467	0285264
6	(9560 - 9580)	1	H177186	0285333
7	(9540)	1	H177589	0200109
7	(9560 - 9580)	1	H146636	0217106
8		1	H176765	0227482
8		1	H177383	0203437
9		1	H177442	1524427
9		1	H177178	1524411 EE-TECH
9		1	Z59286	0224406 EE-TECH
10		1	H152146	0210220
10		1	H152180	1410203
11		1	H176766	0227255
11		1	H202821	0227262
11		1	H176882	0203210
11		1	Z56959	0203218
12		1	Z73879	0702199
12		1	Z78834	0301198
13		1	H177177	0224390 EE-TECH

9550 - 9550 SIDE HILL

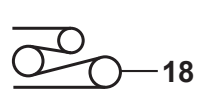

Straw Spreader

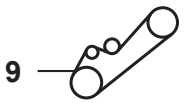

Feederhouse
Fixed W/Reverser

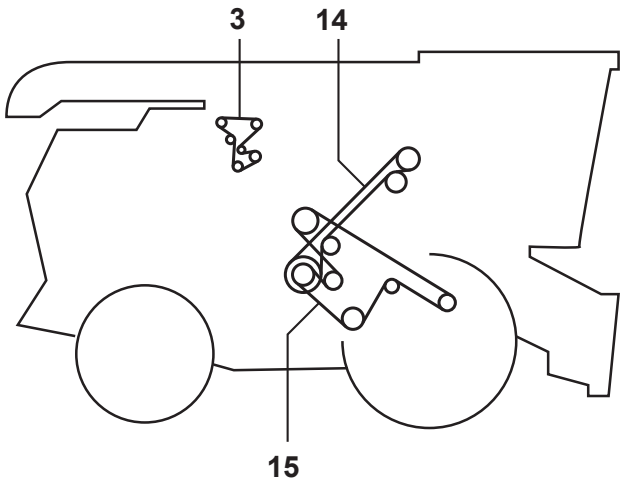

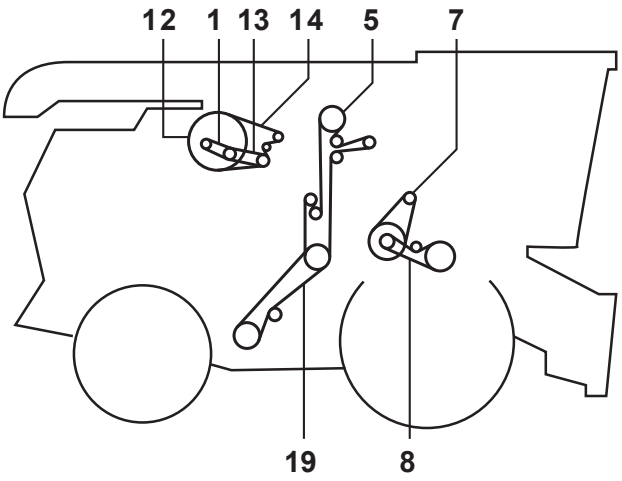

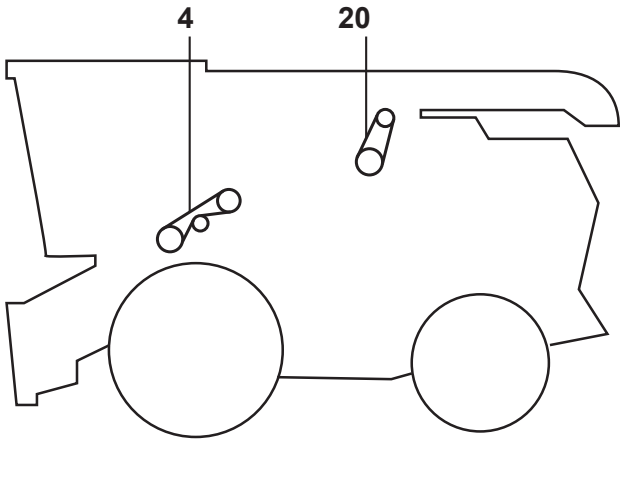

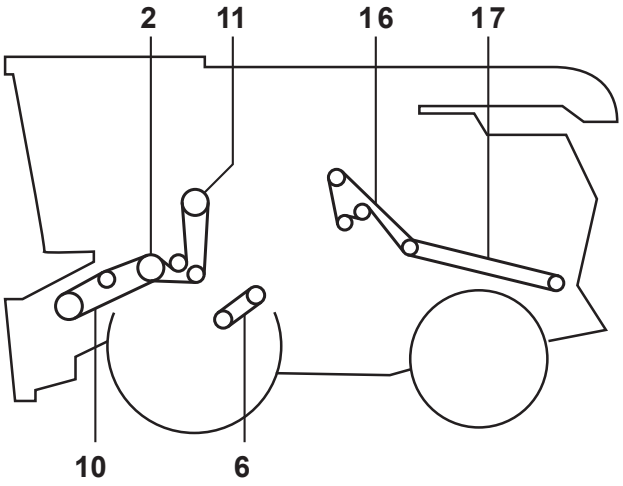

9550 - 9550 SIDE HILL (CONTINUED)

			OE	
1	COOLING FAN	1	H160405	0223139
2	AIR FLOW DRIVE (9550)	1	H171386	0301211
3	ALTERNATOR (95 AMP)	1	H163515	0285325
3	ALTERNATOR (185 AMP)	1	H166870	0285327
4	BEATER DRIVE (75 %)	2	AH163931	1602150
4	BEATER DRIVE (100 %)	2	AH139436	0702151
5	CLEAN GRAIN ELEVATOR	1	H141166	1402609
6	CLEANING FAN (490 - 980 RPM)	1	H152180	1410203
6	CLEANING FAN (750 - 1350 RPM)	1	H152146	0210220
7	CYLINDER INTERMEDIATE DRIVE	1	H210476	0215195
7	CYLINDER INTERMEDIATE DRIVE	1	H137670	0251265
8	CYLINDER DRIVE (240 - 960 RPM)	1	H115881	1425257
8	CYLINDER DRIVE (150 - 500 RPM)	1	H118618	0325248
9	FEEDERHOUSE WITH REVERSER, FIXED SPEED (SER. NR TILL 700200) (9550)	1	H126345	0203351
9	FEEDERHOUSE WITH REVERSER, FIXED SPEED (SER. NR TILL 700700) (9550 SIDE HILL)	1	H126345	0203351
9	FEEDERHOUSE WITH REVERSER, FIXED SPEED (SER. NR FROM 700201) (9550)	1	H156796	0203363
9	FEEDERHOUSE WITH REVERSER, FIXED SPEED (SER. NR FROM 700701) (9550 SIDE HILL)	1	H156796	0203363
10	FEEDERHOUSE, VARIABLE SPEED (SER. NR TILL 700200) (9550)	1	H161648	0211357
10	FEEDERHOUSE, VARIABLE SPEED (SER. NR TILL 700700) (9550 SIDE HILL)	1	H161648	0211357
10	FEEDERHOUSE, VARIABLE SPEED (SER. NR FROM 700201) (9550)	1	H205167	0211362
10	FEEDERHOUSE, VARIABLE SPEED (SER. NR FROM 700701) (9550 SIDE HILL)	1	H205167	0211362
10	FEEDERHOUSE, VARIABLE SPEED (HIGH CAPACITY) (9550)	1	H218728	0212364
11	HEADER & REEL PUMP (STANDARD CAPACITY)	1	H151952	1403325
11	HEADER & REEL PUMP (HIGH CAPACITY) (9550)	1	H155998	0227365
12	ROTARY SCREEN (SER. NR TILL 690700)	1	H145158	1400286
12	ROTARY SCREEN (SER. NR FROM 690701)	1	H175632	0200285
13	ROTARY SCREEN DRIVE (SER. NR TILL 700200)	1	H160406	0217140
13	ROTARY SCREEN DRIVE (SER. NR FROM 700201)	1	H177589	0200109
14	SECONDARY COUNTERSHAFT	1	H128010	2002365
15	SHOE, WALKER & CONVEYOR AUGERS	1	H131169	0202493
16	STRAW CHOPPER, FRONT	1	H157726	0223404 EE-TECH
17	STRAW CHOPPER (FINE CUT)	1	H175434	0223372 EE-TECH
17	STRAW CHOPPER (STANDARD)	1	H160654	0202332
17	STRAW CHOPPER (STANDARD BALING)	1	H23950	0202235
17	STRAW CHOPPER (FINE CUT BALING)	1	H22529	1401234
18	STRAW SPREADER	1	H128234	1401412
19	TAILINGS AUGER & ELEVATOR, LOWER	1	N110085	0302251
20	UNLOADING SYSTEM	2	AH158880	0102181

9560 STS

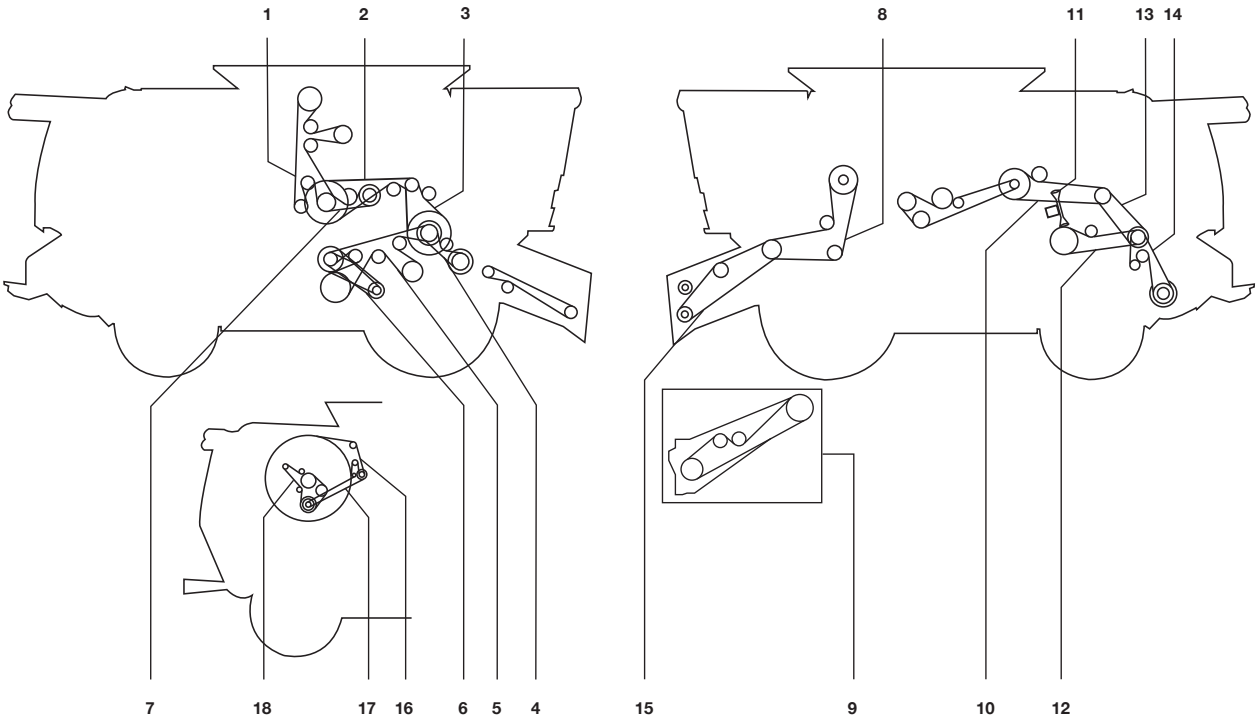

			OE	
1	CLEAN GRAIN ELEVATOR DRIVE	1	H218645	1402501
2	JACKSHAFT - RIGHT HAND (REAR)	1	H154723	0902289
3	JACKSHAFT - (FRONT) RIGHT HAND	2	AH202773	0302200
4	FEEDER ACCELERATOR - STANDARD SPEED (SERIAL NR. 715301 - ...)	1	H211581	0257264
4	FEEDER ACCELERATOR - STANDARD SPEED (SERIAL NR. ... - 715300)	1	H221731	0227208
4	FEEDER ACCELERATOR - LOW SPEED	1	H221732	0227204
5	SHOE FAN AND CONVEYOR AUGERS	1	H175587	0202517
6	CLEANING FAN DRIVE	1	H206048	0810190
6	CLEANING FAN - SLOW SPEED (SUB FOR H206049)	1	H211601	0210209
7	TAILINGS AUGER AND ELEVATOR	1	H154731	0402159
7	TAILINGS AUGER AND ELEVATOR (EDIBLE BEAN)	1	A-C72	0102148
8	HEADER AND REEL PUMP (STANDARD CAPACITY)	1	H126345	0203351
8	HEADER AND REEL PUMP (HIGH CAPACITY)	1	H209507	2027389
9	FEEDER HOUSE FIXED SPEED	1	H126345	0203351
10	UNLOADING AUGER DRIVE	2	AH160080	0202235
11	ROTOR VARIATOR DRIVE	1	H169449	0251449
12	DISCHARGE BEATER DRIVE	1	H168301	0102257
13	COUNTERSHAFT - DISCHARGE BEATER AND CHOPPER	1	H157514	0227242
14	STRAW CHOPPER DRIVE	1	H204747	0223316 EE-TECH
15	FEEDER HOUSE VARIABLE DRIVE (STANDARD CAPACITY)	1	H201334	0211310
15	FEEDER HOUSE VARIABLE DRIVE (HIGH CAPACITY)	1	H218726	0212325
16	ROTARY SCREEN DRIVE - SCREEN SIDE	1	H175632	0200285
17	ROTARY SCREEN DRIVE - ENGINE SIDE	1	H201498	0200128
18	ALTERNATOR DRIVE (95 AMP)	1	R135606	0285306
18	ALTERNATOR DRIVE (185 AMP)	1	R135609	0285310

9560I STS

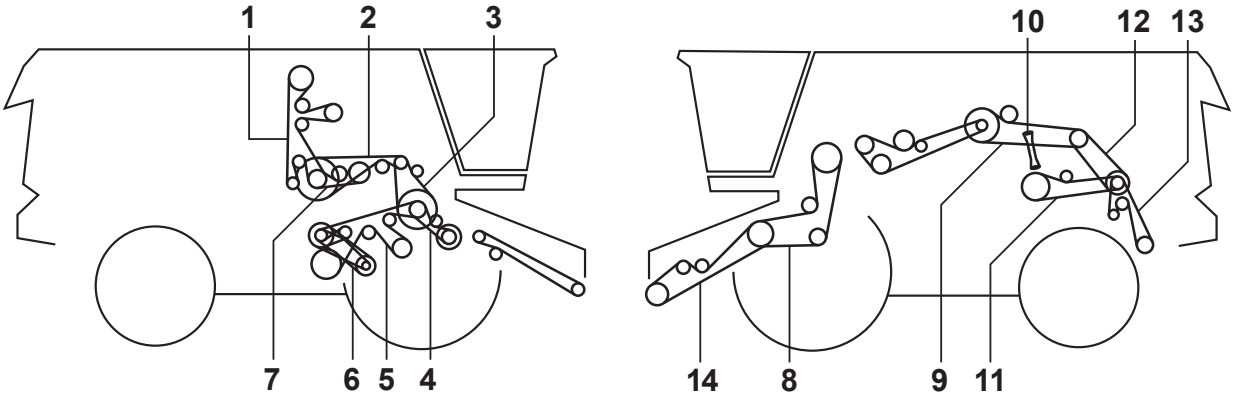

			OE	
1		1	H218645	1402501
2		1	H154723	0902289
3		2	AH150678	1402217
4		1	H221733	0227218
4		1	H221732	0227204
5		1	H175587	0202517
6	CLEANING FAN DRIVE	1	H206048	0810190
7		1	H154731	0402159
8	HEADER AND REEL PUMP (HIGH CAPACITY)	1	H209507	2027389
9	UNLOADING AUGER DRIVE	2	AH160080	0202235
10		1	H221498	0251498
11	DISCHARGE BEATER DRIVE	1	H168301	0102257
12		1	HXE15671	0227242
13		1	H235564	0223316 EE-TECH
14		1	H174885	0227353

9570 STS

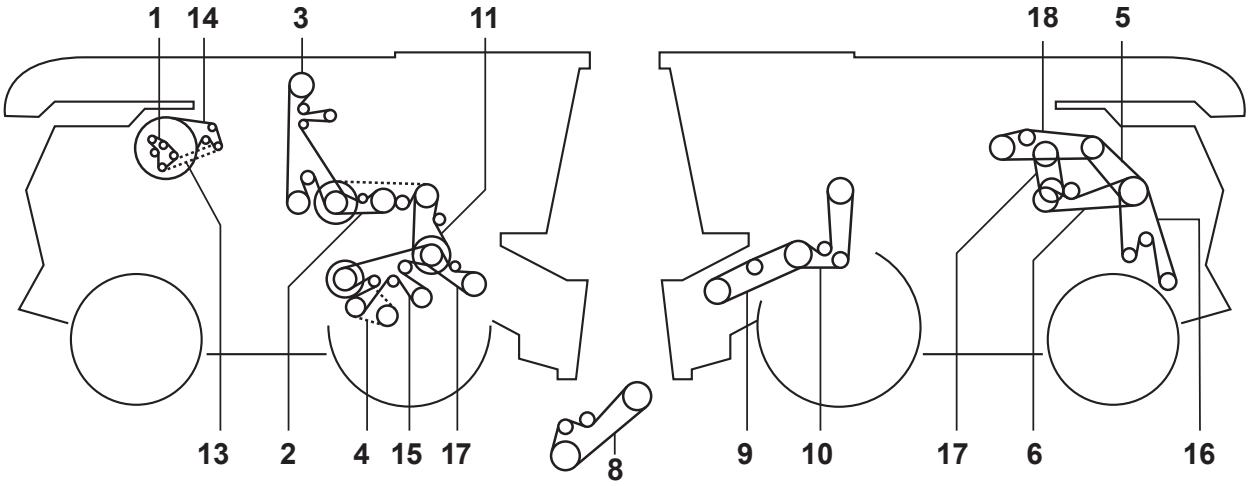

Feederhouse
Fixed Speed

			OE	
1	TAILINGS AUGER & ELEVATOR	1	H154731	0402159
1	TAILINGS AUGER & ELEVATOR, EDIBLE BEAN	1	A-C72	0102148
2	CLEAN GRAIN ELEVATOR	1	H218645	1402501
3	CLEANING FAN	1	H230909	0210192
3	CLEANING FAN (SLOW SPEED)	1	H215389	0210213
4	COUNTERSHAFT, DISCHARGE BEATER AND CHOPPER	1	H157514	0227242
4	SUBS FOR H157514	1	HXE15671	0227242
5	DISCHARGE BEATER	1	H219182	0102257
6	FEED ACCELERATOR (STANDARD SPEED)	1	H236472	0257264
6	FEED ACCELERATOR (SLOW SPEED)	1	H221732	0227204
7	FEEDERHOUSE, FIXED SPEED	1	H203474	0203302
8	FEEDERHOUSE, VARIABLE SPEED. STANDARD CAPACITY	1	H201334	0211310
8	FEEDERHOUSE, VARIABLE SPEED. HIGH CAPACITY	1	H218726	0212325
9	HEADER AND REEL PUMP, STANDARD CAPACITY	1	H126345	0203351
9	HEADER AND REEL PUMP, HIGH CAPACITY	1	H209507	2027389
10	RIGHT HAND JACKSHAFT (FRONT)	2	AH202773	0302200
10	RIGHT HAND JACKSHAFT, EDIBLE BEAN	1	A-C144	2002283
11	RIGHT HAND JACKSHAFT (REAR)	1	H154723	0902289
12	SHOE FAN & CONVEYOR AUGERS	1	H175587	0202517
13	VARIABLE ROTOR DRIVE	1	H221498	0251498
14	UNLOADING AUGER SYSTEM	2	AH160080	0202235

9570 STS - NA EDITION

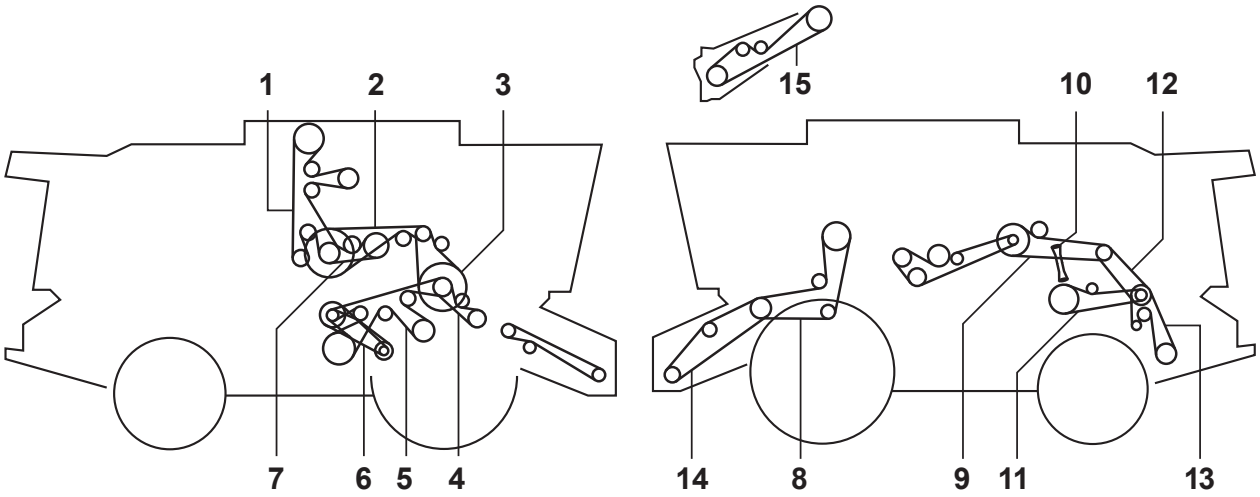

			OE	
1	CLEAN GRAIN ELEVATOR DRIVE	1	H218645	1402501
2	JACKSHAFT - RIGHT HAND (REAR)	1	H154723	0902289
3	JACKSHAFT - RIGHT HAND (FRONT)	2	AH202773	0302200
3	JACKSHAFT - (FRONT) RIGHT HAND (EDIBLE BEAN)	1	A-C144	2002283
4	FEEDER ACCELERATOR - STANDARD SPEED	1	H236472	0257264
4	FEEDER ACCELERATOR - LOW SPEED	1	H221732	0227204
5	SHOE FAN AND CONVEYOR AUGERS	1	H175587	0202517
6	CLEANING FAN DRIVE	1	H230909	0210192
6	CLEANING FAN - SLOW SPEED	1	H215389	0210213
7	TAILINGS AUGER AND ELEVATOR	1	H154731	0402159
7	TAILINGS AUGER AND ELEVATOR (EDIBLE BEAN)	1	A-C72	0102148
8	HEADER AND REEL PUMP (STANDARD CAPACITY)	1	H126345	0203351
8	HEADER AND REEL PUMP (HIGH CAPACITY)	1	H209507	2027389
9	UNLOADING AUGER DRIVE	2	AH160080	0202235
10	ROTOR VARIATOR DRIVE	1	H221498	0251498
11	DISCHARGE BEATER DRIVE	1	H219182	0102257
12	COUNTERSHAFT - BEATER AND CHOPPER (STANDARD CAPACITY)	1	HXE15671	0227242
13	STRAW CHOPPER DRIVE	1	H235564	0223316 EE-TECH
14	FEEDER HOUSE VARIABLE DRIVE (STANDARD CAPACITY)	1	H201334	0211310
14	FEEDER HOUSE VARIABLE DRIVE (HIGH CAPACITY)	1	H218726	0212325
15	FEEDER HOUSE FIXED SPEED	1	H203474	0203302
x	ALTERNATOR DRIVE (200 AMP)	1	R521053	0285329

9570 STS - SA EDITION

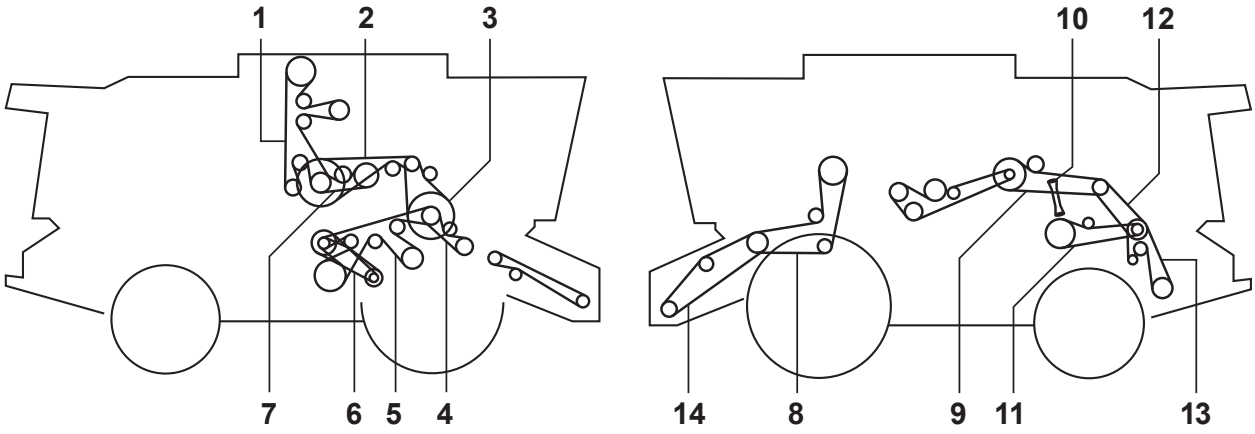

			OE	
1	CLEAN GRAIN ELEVATOR DRIVE	1	H218645	1402501
2	JACKSHAFT - RIGHT HAND (REAR)	1	H154723	0902289
3	JACKSHAFT - RIGHT HAND (FRONT)	2	AH202773	0302200
4	FEEDER ACCELERATOR - STANDARD SPEED	1	H211581	0257264
5	SHOE FAN AND CONVEYOR AUGERS	1	H175587	0202517
6	CLEANING FAN DRIVE	1	H230909	0210192
6	CLEANING FAN - SLOW SPEED	1	H215389	0210213
7	TAILINGS AUGER AND ELEVATOR	1	H154731	0402159
8	HEADER AND REEL PUMP (HIGH CAPACITY)	1	H209507	2027389
9	UNLOADING AUGER DRIVE	2	AH160080	0202235
10	ROTOR VARIATOR DRIVE	1	H221498	0251498
11	DISCHARGE BEATER DRIVE	1	H219182	0102257
12	COUNTERSHAFT - BEATER AND CHOPPER (STANDARD CAPACITY)	1	H157514	0227242
13	STRAW CHOPPER DRIVE	1	H204747	0223316 EE-TECH
14	FEEDER HOUSE VARIABLE DRIVE (HIGH CAPACITY)	1	H218726	0212325
x	ALTERNATOR DRIVE (200 AMP)	1	R521053	0285329

9600

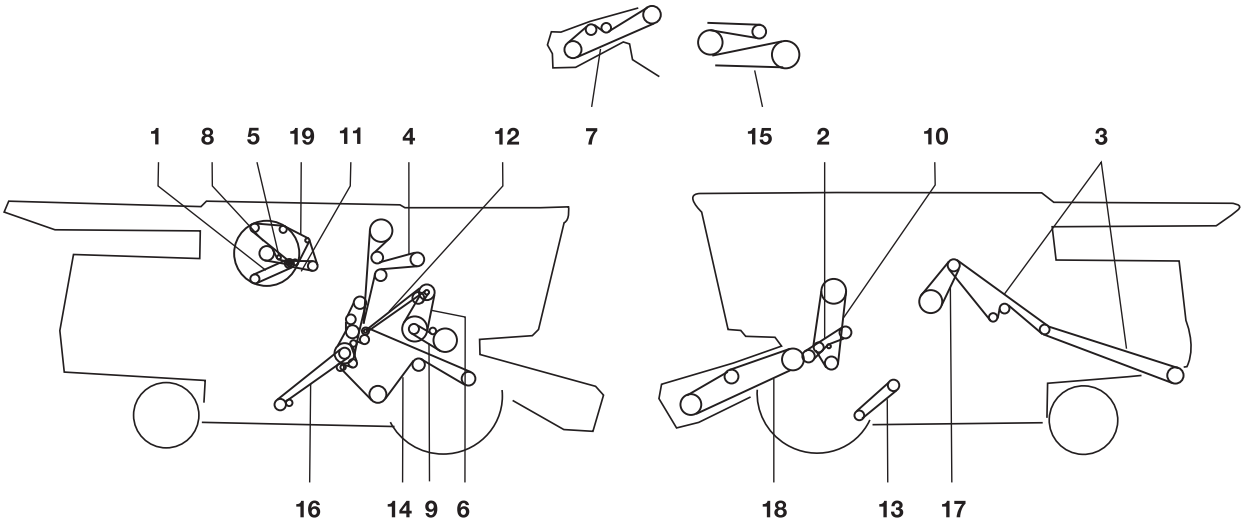

			OE	
1	COOLING FAN	1	H132808	0201108
2	ROTARY SCREEN DRIVE	1	H143869	1400264
3	ROTARY SCREEN DRIVE	1	H133577	/
4	AIR CONDITIONING COMPRESSOR DRIVE	1	H134437	0372245
5	CLEAN GRAIN ELEVATOR DRIVE	1	H135458	0202595
5	CLEAN GRAIN ELEVATOR DRIVE	1	H141166	1402609
6	CYLINDER DRIVE INTERMEDIATE	1	H115759	0215195
6	FOR EXTENDED RANGE	1	H137670	0251265
7	CYLINDER DRIVE, SLOW SPEED	1	H118618	0325248
7	CYLINDER DRIVE REGULAR DUAL RANGE	1	H115881	1425257
7	UNLOADING SYSTEM	1	AH127866	0302179
8	TAILINGS AUGER AND ELEVATOR (LOWER)	1	N110085	0302251
9	FOR ALTERNATOR	1	H134344	0172217
10	COUNTERSHAFT (SECONDARY)	1	H128010	2002365
11	STRAW WALKER SHOE - CONVEYOR AUGERS	1	H131169	0202493
12	UNLOADING SYSTEM	1	AH127866	0302179
13	SHORT REAR	1	P47885	0702292
13	LONG REAR	1	H125381	0202332
13	STRAW CHOPPER DRIVE, FRONT	1	H125380	1402358
14	REGULAR	1	H140404	0210213
14	SLOW SPEED	1	H137264	0203187
15	HEADER AND REEL PUMP	1	H125565	0203321
15	HEADER AND REEL PUMP	1	H140160	1403325
16	FEEDER DRIVE VARIABLE SPEED	1	H125711	0211357
17	BEATER OPTIONAL (75 %)	1	AH131960	0302146
17	BEATER (100 % BEATER SPEED)	2	AH139436	0702151
18	FEEDER HOUSE FIXED SPEED WITH REVERSER	1	H126345	0203351
19	STRAW SPREADER DRIVE	1	H128234	1401412

9600 MAXIMIZER

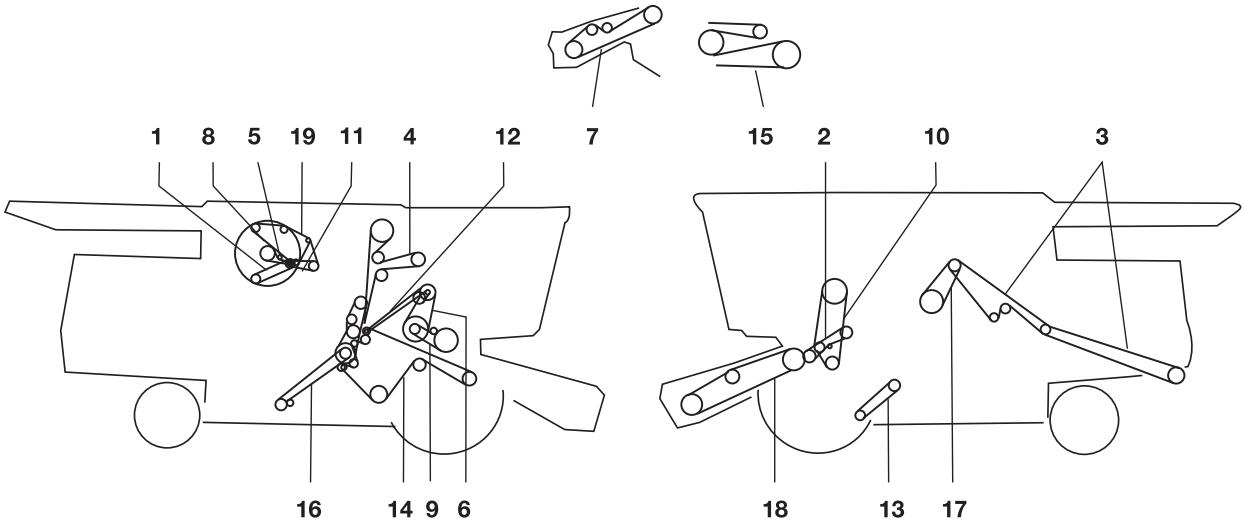

			OE	
1	COOLING FAN	1	H132808	0201108
1	COOLING FAN	2	H153297	0223148
2	ROTARY SCREEN DRIVE	1	H143869	1400264
3	ROTARY SCREEN DRIVE	1	H145158	1400286
3	ROTARY SCREEN DRIVE	1	H133577	/
3	ROTARY SCREEN DRIVE	1	H146637	0172214
3	ROTARY SCREEN DRIVE	1	H146636	0217106
4	AIR CONDITIONING COMPRESSOR DRIVE	1	H134437	0372245
4	AIR CONDITIONING COMPRESSOR DRIVE	1	H81742	1472236
4	AIR CONDITIONING COMPRESSOR DRIVE	1	H80896	0200107
5	CLEAN GRAIN ELEVATOR DRIVE	1	H135458	0202595
5	CLEAN GRAIN ELEVATOR DRIVE	1	H141166	1402609
6	CYLINDER DRIVE INTERMEDIATE	1	H162629	0215195
6	CYLINDER DRIVE INTERMEDIATE	1	H210476	0215195
7	CYLINDER DRIVE REGULAR DUAL-RANGE AND SINGLE RANGE	1	H115881	1425257
7	CYLINDER DRIVE, SLOW SPEED	1	H118618	0325248
8	TAILINGS AUGER AND ELEVATOR (LOWER)	1	N110085	0302251
9	HEADER AND REEL PUMP	1	H125565	0203321
9	HEADER AND REEL PUMP	1	H140160	1403325
10	STRAW CHOPPER DRIVE, FRONT	1	H125380	1402358
10	STRAW CHOPPER DRIVE, FRONT - FINE CHOPPER	1	H157726	0223404 EE-TECH
10	CHOPPER IN WINDROW OR FORWARD POSITION	1	P47885	0702292
10	CHOPPER IN WINDROW OR FORWARD POSITION	1	H23950	0202235
10	CHOPPER IN REAR (OPERATING) POSITION	1	H125381	0202332
11	(490-980 RPM) OPT. SPEED	1	H137264	0203187
11	(750-1350 RPM) STANDARD SPEED	1	H140404	0210213
11	(750-1600 RPM) STANDARD SPEED	1	H152146	0210220
11	(490-980 RPM) OPT. SPEED	1	H152180	1410203
12	FEEDER HOUSE FIXED SPEED WITH REVERSER	1	H126345	0203351

9600 MAXIMIZER (CONTINUED)

			OE	
13	FEEDER DRIVE VARIABLE SPEED	1	H125711	0211357
14	STRAW SPREADER DRIVE	1	H128234	1401412
15	FOR ALTERNATOR	2	RE44538	0372245
15	FOR ALTERNATOR	1	R73189	0272218
15	FOR ALTERNATOR	1	H101813	0200110
16	COUNTERSHAFT (SECONDARY)	1	H128010	2002365
17	STRAW WALKER SHOE - CONVEYOR AUGERS	1	H131169	0202493

9610

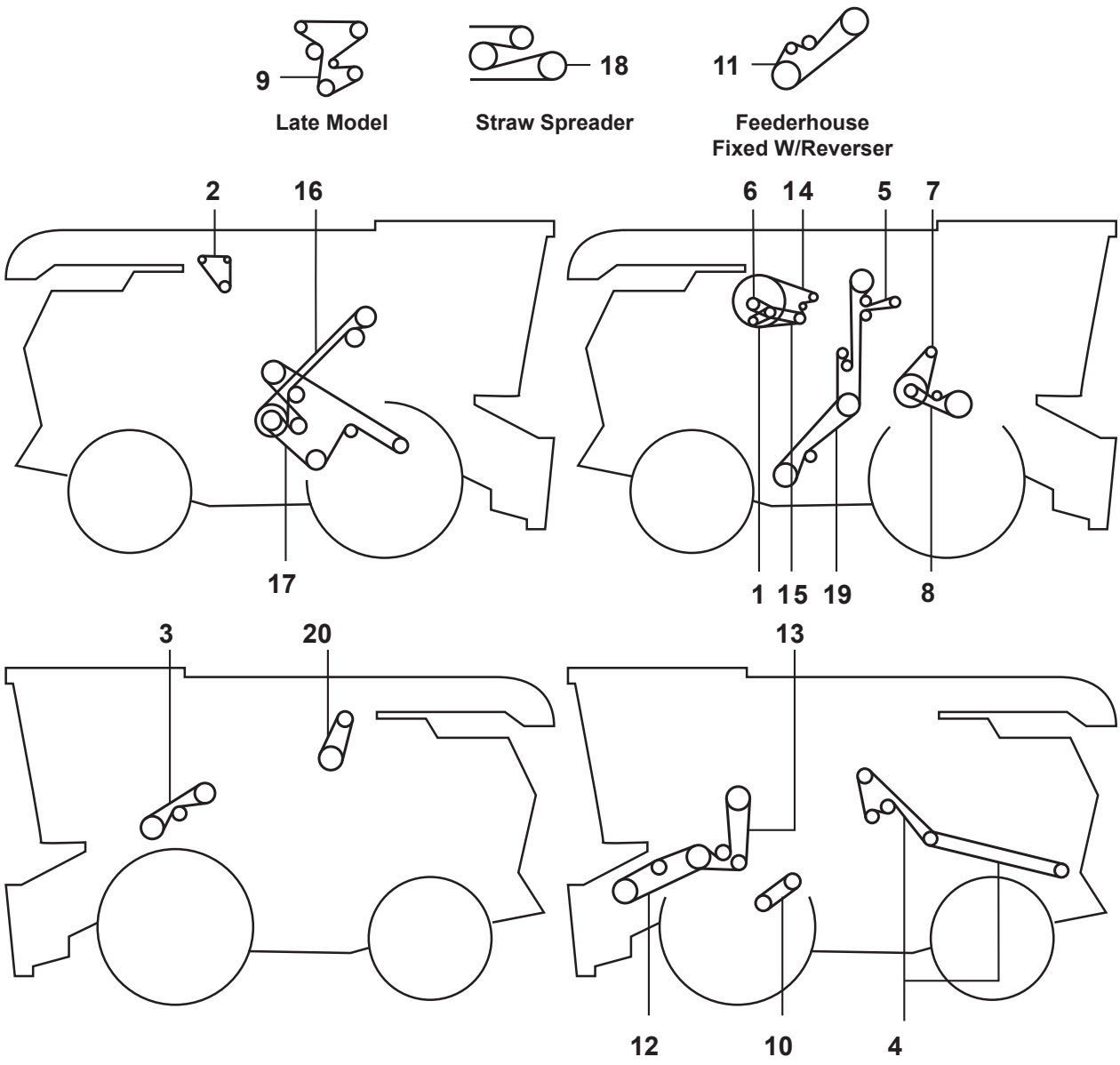
9
Late Model
18
Straw Spreader
11
Feederhouse
Fixed W/Reverser
2
16
17
6
14
5
7
1
15
19
8
3
20
13
12
10
4

9610 (CONTINUED)

			OE	
0	AIR FLOW DRIVE	1	H164452	2001086
1	AIR CONDITIONING COMPRESSOR DRIVE	2	H163515	0285325
2	ALTERNATOR	1	H163515	0285325
3	BEATER DRIVE (100 %)	2	AH139436	0702151
3	BEATER DRIVE (75 %)	2	AH163931	1602150
4	FRONT CHOPPER	1	H125380	1402358
4	CHOPPER IN WINDROW OR FORWARD POSITION (FINE CUT)	1	H22529	1401234
4	CHOPPER WINDROW OR FORWARD POSITION	1	H23950	0202235
4	REAR CHOPPER (OPERATING) POSITION	1	H125381	0202332
4	FRONT CHOPPER (FINE CUT)	1	H157726	0223404 EE-TECH
5	CLEAN GRAIN ELEVATOR	1	H141167	0202610
6	COOLING FAN	1	H153297	0223148
7	CYLINDER INTERMEDIATE DRIVE	1	H210476	0215195
8	CYLINDER DR. REGULAR DUAL RANGE & SINGLE RANGE	1	H115881	1425257
8	CYLINDER DRIVE, SLOW SPEED	1	H118618	0325248
9	ALTERNATOR	1	H163515	0285325
10	FAN DRIVE, SLOW SPEED	1	H152180	1410203
10	FAN DRIVE, REGULAR SPEED	1	H152146	0210220
11	FEEDERHOUSE, FIXED SPEED WITH REVERSER	1	H126345	0203351
12	FEEDERHOUSE, VARIABLE SPEED	1	H161648	0211357
13	POWERSHIFT & REEL PUMP, HEADER	1	H151952	1403325
14	ROTARY SCREEN	1	H145158	1400286
15	ROTARY SCREEN DRIVE	1	H146636	0217106
16	SECONDARY COUNTERSHAFT	1	H128010	2002365
17	SHOE, STRAW WALKER & CONVEYOR AUGERS	1	H131169	0202493
18	STRAW SPREADER	1	H128234	1401412
19	TAILINGS AUGER AND ELEVATOR (LOWER)	1	N110085	0302251
20	UNLOADING SYSTEM	2	AH158880	0102181

9610 MAXIMIZER

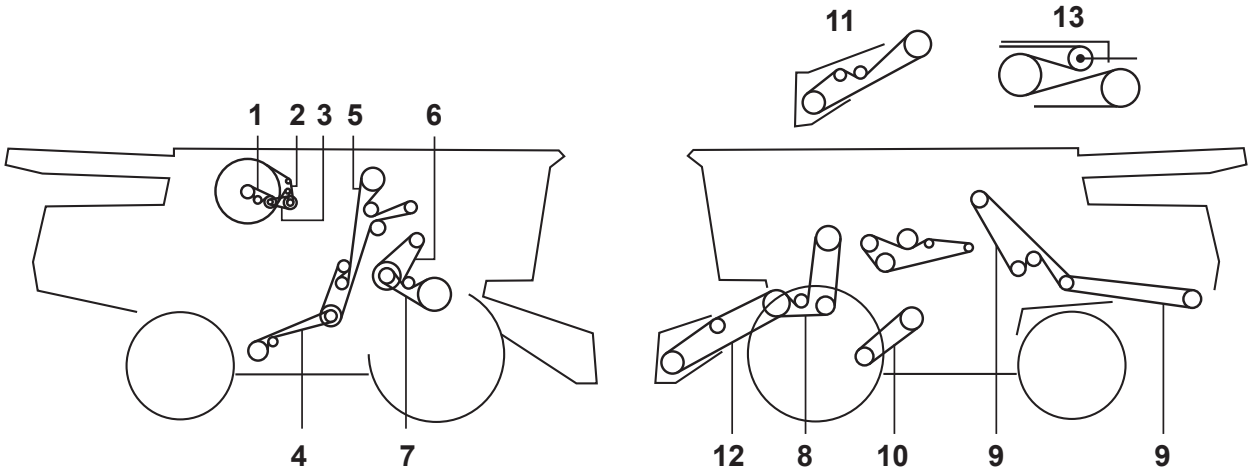

			OE	
1	COOLING FAN	1	H153297	0223148
2	ROTARY SCREEN	1	H145158	1400286
3	ROTARY SCREEN DRIVE	1	H146636	0217106
4	LOWER TAILINGS AUGER & ELEVATOR	1	N110085	0302251
5	CLEAN GRAIN ELEVATOR	1	H141167	0202610
6	CYLINDER INTERMEDIATE DRIVE	1	H162629	0215195
6	FOR EXTENDED RANGE	1	H210476	0215195
7	CYLINDER DRIVE REGULAR DUAL RANGE & SINGLE RANGE	1	H115881	1425257
7	CYLINDER DRIVE, SLOW SPEED	1	H118618	0325248
8	HEADER AND REEL PUMP	1	H151952	1403325
9	STRAW CHOPPER DRIVE, FRONT	1	H125380	1402358
9	CHOPPER IN WINDROW OR FORWARD POSITION	1	H23950	0202235
9	CHOPPER IN WINDROW OR FORWARD POSITION (FINE CUT)	1	H22529	1401234
9	CHOPPER IN REAR (OPERATING) POSITION	1	H125381	0202332
9	CHOPPER FRONT (FINE CUT)	1	H157726	0223404 EE-TECH
9	CHOPPER REAR (FINE CUT)	1	H175434	0223372 EE-TECH
10	STRAW CHOPPER DRIVE, REGULAR SPEED	1	H152146	0210220
10	STRAW CHOPPER DRIVE, SLOW SPEED	1	H152180	1410203
11	FIXED SPEED FEEDER HOUSE WITH REVERSER	1	H126345	0203351
12	FEEDER HOUSE VARIABLE SPEED	1	H161648	0211357
13	STRAW SPREADER	1	H128234	1401412

9640(i) WTS - 9660(i) WTS - 9680(i) WTS

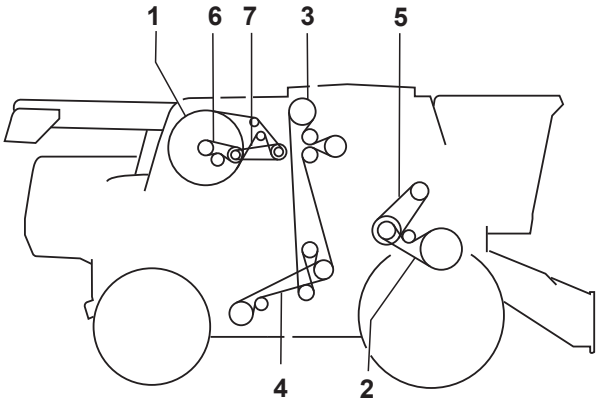

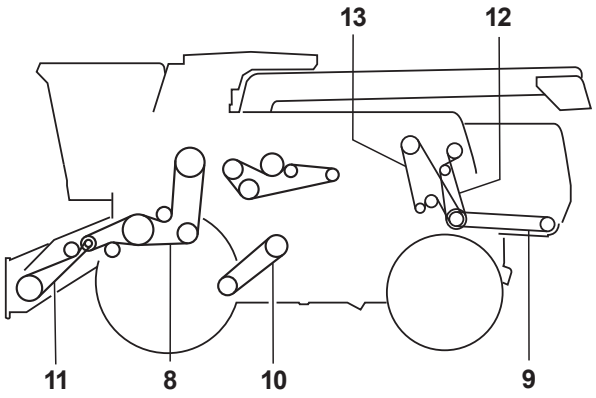

			OE	
1	(9640)	1	H175632	0200285
1	(9660 - 9680)	1	H175628	0200328
2		1	H115881	1425257
3	(SUB FOR H177263)	1	HXE51300	0202609
4		1	N110085	0302251
5	(SUB FOR H210476)	1	HXE51101	0215195
6	(9640)	1	H177186	0285333
6	(9660 - 9680)	1	H174455	0385331
7		1	H146636	0217106
8		1	H176765	0227482
9		1	H177442	1524427
9		1	H177178	1524411 EE-TECH
9		1	Z59286	0224406 EE-TECH
10		1	H152146	0210220
10		1	H152180	1410203
11		1	H176766	0227255
11		1	H202821	0227262
12	(PRIOR TO SER NR 076057)	1	Z73879	0702199
12	(FOLLOWING SER NR 076058)	1	Z78834	0301198
13		1	H177177	0224390 EE-TECH

9650

			OE	
1	AIR CONDITIONING COMPRESSOR DRIVE	1	H163515	0285325
1	AIR FLOW DRIVE	1	H171386	0301211
2	ALTERNATOR (95 AMP)	1	H163515	0285325
2	ALTERNATOR (185 AMP) (PRIOR TO SER NR 695300)	1	H166870	0285327
2	ALTERNATOR (185 AMP) (FOLLOWING SER NR 695301)	1	R164820	0285249
3	BEATER DRIVE (100%)	2	AH139436	0702151
3	BEATER DRIVE (75%)	2	AH163931	1602150
4	CLEAN GRAIN ELEVATOR	1	H141166	1402609
5	CLEANING FAN (750 - 1350 RPM)	1	H152146	0210220
5	CLEANING FAN (490 - 980 RPM)	1	H152180	1410203
6	COOLING FAN (-695300)	1	H153297	0223148
6	COOLING FAN (695301-)	1	H177186	0285333
7	COUNTERSHAFT SECONDARY	1	H128010	2002365
8	CYLINDER INTERMEDIATE DRIVE BELT	1	H210476	0215195
8	CYLINDER DRIVE (240 - 960 RPM)	1	H115881	1425257
8	CYLINDER DRIVE (150 - 500 RPM)	1	H118618	0325248
9	ENGINE TO PTO JACKSHAFT (UPPER)	1	H157726	0223404 EE-TECH
10	FEEDER HOUSE VARIABLE SPEED (-700300)	1	H161648	0211357
10	FEEDER HOUSE VARIABLE SPEED (700301-)	1	H205167	0211362
11	VARIABLE SPEED FEEDER HOUSE (HI-CAPACITY)	1	H218728	0212364
12	FEEDER HOUSE FIXED SPEED W/REVERSER (-700300)	1	H126345	0203351
12	FEEDER HOUSE FIXED SPEED W/REVERSER (700301-)	1	H156796	0203363
13	HEADER AND REEL PUMP (STANDARD)	1	H151952	1403325
13	HEADER AND REEL PUMP (HIGH CAP.)	1	H155998	0227365
14	LOWER TAILINGS AUGER & ELEVATOR	1	N110085	0302251
15	ROTARY SCREEN (-655300)	1	H145158	1400286
15	ROTARY SCREEN (695301-)	1	H175632	0200285
15	ROTARY SCREEN DRIVE (-695300)	1	H160406	0217140
15	ROTARY SCREEN DRIVE (695301-)	1	H146636	0217106
16	SHOE, WALKER, AND CONVEY OR AUGERS	1	H131169	0202493
17	STRAW CHOPPER (FINE CUT)	1	H175434	0223372 EE-TECH
17	STRAW CHOPPER (FINE CUT BALING)	1	H22529	1401234
17	STRAW CHOPPER (STANDARD)	1	H160654	0202332
17	STRAW CHOPPER (STANDARD BALING)	1	H23950	0202235
18	STRAW SPREADER	1	H128234	1401412
19	UNLOADING SYSTEM	2	AH158880	0102181

9650 CTS

			OE	
1	ALTERNATOR (95 AMP) (-695400)	1	H163515	0285325
1	ALTERNATOR (185 AMP) (-695400)	1	H166870	0285327
2	ALTERNATOR (185 AMP) (695401-)	1	R164820	0285249
2	COUNTERSHAFT SECONDARY	1	H128010	2002365
2	CONVEYOR AUGER, SIEVE, AND CHAFFER	1	H131169	0202493
3	COOLING FAN (-695400)	1	H160405	0223139
3	COOLING FAN (695401-)	1	H177186	0285333
3	DUAL RANGE CYLINDER DRIVE	1	H162629	0215195
4	ROTARY SCREEN (-695400)	1	H145158	1400286
5	ROTARY SCREEN (695401-)	1	H175632	0200285
5	ROTARY SCREEN DRIVE (-695400)	1	H160406	0217140
6	ROTARY SCREEN DRIVE (695401-)	1	H146636	0217106
6	CLEAN GRAIN ELEVATOR	1	H141166	1402609
7	CYLINDER INTERMEDIATE DRIVE (2290 E.L.)	1	H210476	0215195
8	CYLINDER INTERMEDIATE DR.(2270E.L.)	1	H137670	0251265
8	CYLINDER DRIVE (2270E.L.)	1	H145994	0225253 EE-TECH
8	CYLINDER DRIVE (2700E.L.)	1	H118618	0325248
9	CYLINDER DRIVE (2830E.L.)	1	H115881	1425257
10	LOWER TAILINGS AUGER & ELEVATOR	1	N110085	0302251
10	HEADER AND REEL PUMP (STANDARD CAPACITY)	1	H151952	1403325
10	HEADER AND REEL PUMP (HIGH CAPACITY)	1	H155998	0227365
10	AIR FLOW DRIVE	1	H171386	0301211
11	CHOPPER DRIVE	1	H162727	0727301
12	CLEANING FAN (750 - 1350 RPM)	1	H152146	0210220
12	CLEANING FAN (490 - 980 RPM)	1	H152180	1410203
13	FEEDER HOUSE FIXED SPEED W/REVERSER (-700400)	1	H126345	0203351
13	FEEDER HOUSE FIXED SPEED W/REVERSER (700401-)	1	H156796	0203363
14	FEEDER HOUSE VARIABLE SPEED (HI-CAPACITY)	1	H218728	0212364
15	FEEDER HOUSE VARIABLE SPEED (STANDARD CAPACITY) (-700400)	1	H161648	0211357
15	FEEDER HOUSE VARIABLE SPEED (STANDARD CAPACITY) (700401-)	1	H205167	0211362
15	STRAW SPREADER (UPPER)	1	H164870	0201109
15	STRAW SPREADER (LOWER)	1	P49604	1401180
16	TINE SEPARATOR DRIVE	1	H163106	0244488
17	OVERSHOT BEATER DRIVE	1	H139963	0201109
17	OVERSHOT BEATER DRIVE (740-1170 RPM)	1	H165708	0223201
17	OVERSHOT BEATER DRIVE (400 RPM SLOWDOWN KIT)	1	E16774	1102171
17	OVERSHOT BEATER DRIVE (700RPM SLOWDOWN KIT)	1	N121116	2002167
18	STRIPPER BEATER DRIVE	1	H165708	0223201
19	UNLOADING SYSTEM	2	AH158880	0102181

9650 STS - 9750 STS

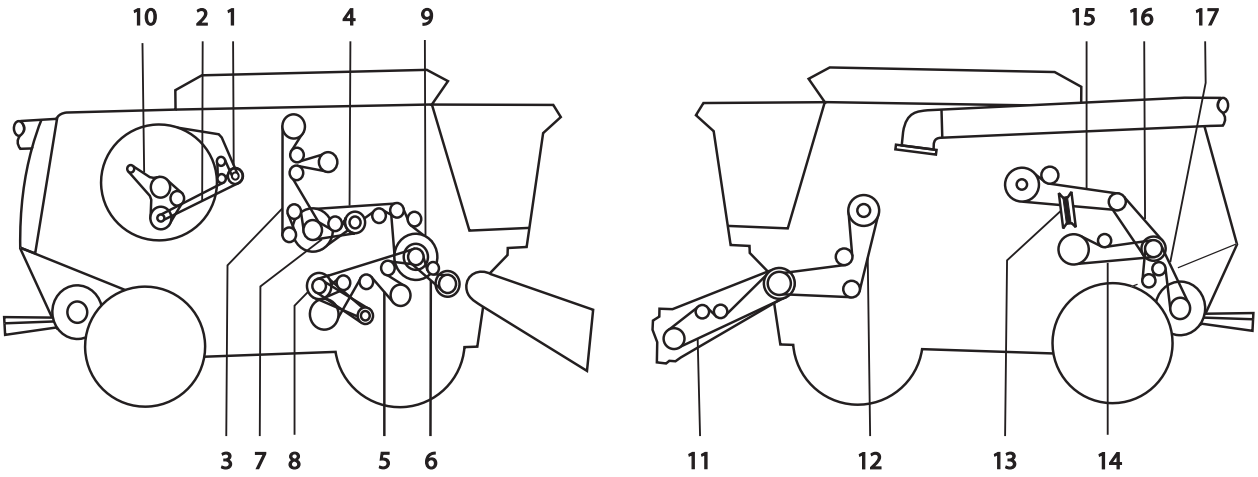

			OE	
1	ROTARY SCREEN DRIVE	1	H206807	0300137
2	ROTARY SCREEN DRIVE	1	H157104	1400153
3	CLEAN GRAIN ELEVATOR	1	H218645	1402501
4	JACKSHAFT - RIGHT HAND (REAR)	1	H154723	0902289
5	SHOE FAN AND CONVEYOR AUGERS	1	H166759	0202517
5	SHOE FAN AND CONVEYOR AUGERS (HEAVY DUTY)	1	H175587	0202517
6	FEEDER ACCELERATOR (SLOW SPEED OR RICE)	1	H201821	0227204
6	FEEDER ACCELERATOR (SLOW SPEED OR RICE)	1	H221732	0227204
6	FEEDER ACCELERATOR (STANDARD)	1	H221731	0227208
7	TAILINGS AUGER AND ELEVATOR	1	H154731	0402159
7	TAILINGS AUGER AND ELEVATOR (EDIBLE BEAN)	1	CP72	0102148
7	TAILINGS AUGER AND ELEVATOR (EDIBLE BEAN)	1	A-C72	0102148
8	CLEANING FAN DRIVE	1	H165072	0210189
9	EDIBLE BEAN	1	CP144	2002283
9	JACKSHAFT - RIGHT HAND (FRONT°)	1	A-C144	2002283
9	JACKSHAFT RIGHT HAND (FRONT)	2	AH150678	1402217
11	FEEDER HOUSE VARIABLE DRIVE (STANDARD) (9650 STS) (FOLLOWING SER NR 700501)	1	H205169	0211322
11	FEEDER HOUSE VARIABLE DRIVE (STANDARD) (9650 STS) (PRIOR TO SER NR 700500)	1	H157732	0211317
11	FEEDER HOUSE VARIABLE DRIVE (STANDARD) (9750 STS) (FOLLOWING SER NR 700601)	1	H205169	0211322
11	FEEDER HOUSE VARIABLE DRIVE (STANDARD) (9750 STS) (PRIOR TO SER NR 700600)	1	H157732	0211317
11	FEEDER HOUSE VARIABLE DRIVE (SUB FOR H166457) (HI-CAPACITY)	1	H218726	0212325
12	HEADER AND REEL PUMP (HI-CAPACITY)	1	H156541	0227408
12	HEADER AND REEL PUMP (STANDARD CAPACITY AND FIXED SPEED)	1	H156796	0203363
13	STS VARIABLE DRIVE	1	H221498	0251498
14	DISCHARGE BEATER DRIVE	1	H168301	0102257
15	UNLOADING AUGER DRIVE	2	AH160080	0202235
16	COUNTERSHAFT - DISCHARGE BEATER AND CHOPPER	1	HXE15671	0227242
17	STRAW CHOPPER DRIVE (9650 STS) (PRIOR TO SER NR 700500)	1	H157523	0323281
17	STRAW CHOPPER DRIVE (9650 STS) (PRIOR TO SER NR 700500)	1	H201571	0323281
17	STRAW CHOPPER DRIVE (9750 STS) (PRIOR TO SER NR 700600)	1	H201571	0323281
17	STRAW CHOPPER DRIVE (9750 STS) (PRIOR TO SR NR 700600)	1	H157523	0323281

9650 STS - 9750 STS (CONTINUED)

			OE	
17	STRAW CHOPPER DRIVE (SUB FOR H204747) (9650 STS) (FOLLOWING SER NR 700601)	1	H235564	0223316 EE-TECH
17	STRAW CHOPPER DRIVE (SUB FOR H204747) (9750 STS) (FOLLOWING SER NR 700601)	1	H235564	0223316 EE-TECH
18	FIXED SPEED FEEDER HOUSE (9650 STS) (FOLLOWING SER NR 700501)	1	H125565	0203321
18	FIXED SPEED FEEDER HOUSE (9650 STS) (PRIOR TO SER NR 700500)	1	H111519	0703313
18	FIXED SPEED FEEDER HOUSE (9750 STS) (FOLLOWING SER NR 700601)	1	H125565	0203321
18	FIXED SPEED FEEDER HOUSE (9750 STS) (PRIOR TO SER NR 700600)	1	H111519	0703313

9650 STS - 9750 STS - SA EDITION

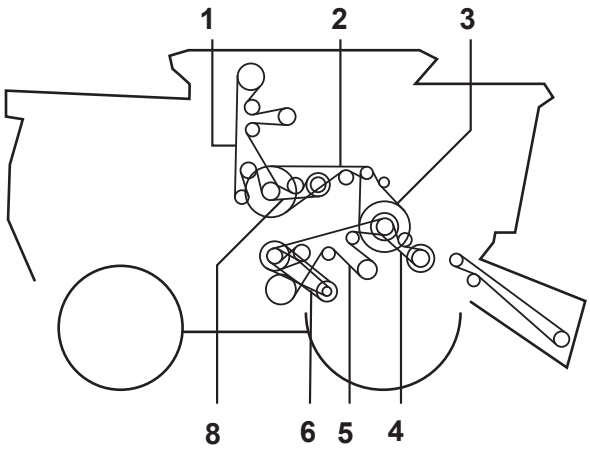

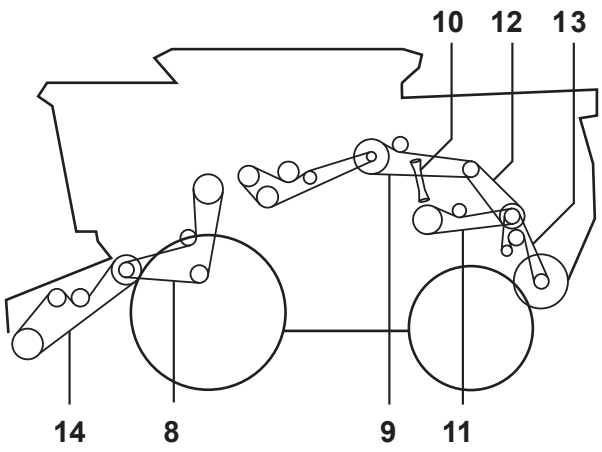

			OE	
1	CLEAN GRAIN ELEVATOR	1	H206738	1402501
2	JACKSHAFT - RIGHT HAND (REAR)	1	H154723	0902289
3	JACKSHAFT RIGHT HAND (FRONT)	2	AH150678	1402217
3	EDIBLE BEAN	1	CP144	2002283
4	FEEDER ACCELERATOR (STANDARD)	1	H204133	0227208
4	FEEDER ACCELERATOR (SLOW SPEED OR RICE)	1	H209606	0102161
4	FEEDER ACCELERATOR (SLOW SPEED OR RICE)	1	H221731	0227208
5			H175587	0202517
6	SHOE FAN AND CONVEYOR AUGERS	1	H165072	0210189
6	SHOE FAN AND CONVEYOR AUGERS	1	H206048	0810190
7	TAILINGS AUGER AND ELEVATOR (EDIBLE BEAN)	1	H154731	0402159
7	TAILINGS AUGER AND ELEVATOR	1	CP72	0102148
7	TAILINGS AUGER AND ELEVATOR	1	H175587	0202517
8	HEADER AND REEL PUMP (HI-CAPACITY)	1	H156541	0227408
9	UNLOADING AUGER DRIVE	2	AH160080	0202235
10	STS VARIABLE DRIVE (PRIOR TO SER NR 000416)	1	H165545	0251449
10	STS VARIABLE DRIVE (FOLLOW SER NR 000417)	1	H221498	0251498
11	DISCHARGE BEATER DRIVE	1	H219182	0102257
12		1	H157514	0227242
12	COUNTERSHAFT - DISCHARGE BEATER AND CHOPPER	1	H204747	0223316 EE-TECH
13	STRAW CHOPPER DRIVE	1	H173024	0212312

9660 - NA EDITION

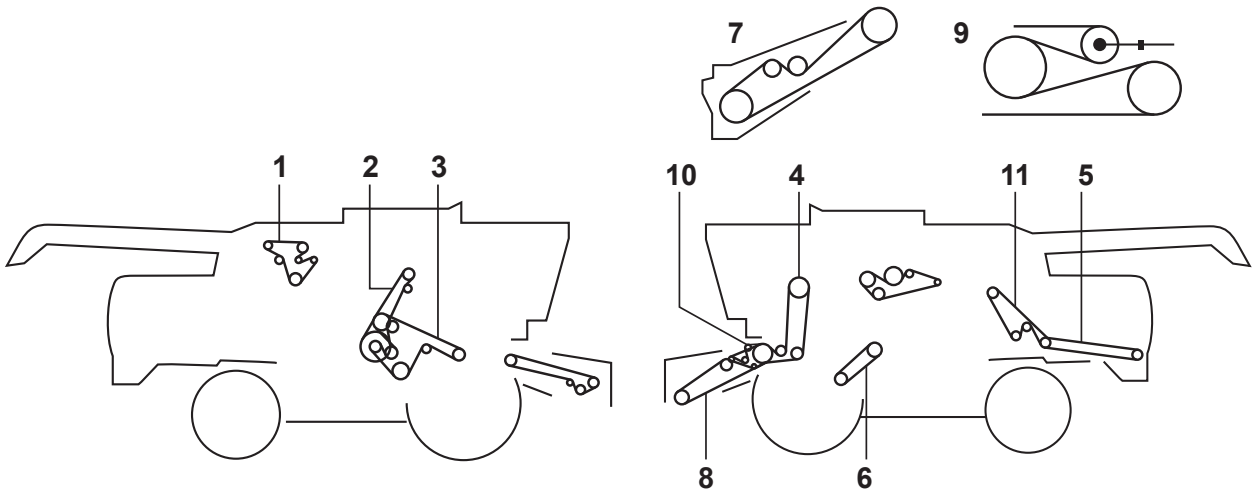

			OE	
1	ALTERNATOR (95 AMP)	1	H163515	0285325
1	ALTERNATOR (185 AMP)	1	R164820	0285249
2	COUNTERSHAFT (SECONDARY)	1	H128010	2002365
3	SHOE, WALKER AND CONVEYOR AUGERS	1	H131169	0202493
4	HEADER AND REEL PUMP (STANDARD CAPACITY)	1	H151952	1403325
4	HEADER AND REEL PUMP (HIGH CAPACITY)	1	H155998	0227365
5	STRAW CHOPPER (FINE CUT)	1	H175434	0223372 EE-TECH
5	STRAW CHOPPER (FINE CUT BALING)	1	H22529	1401234
5	STRAW CHOPPER (STANDARD)	1	H160654	0202332
5	STRAW CHOPPER (STANDARD BALING)	1	H23950	0202235
6	CLEANING FAN (750 - 1350 RPM)	1	H152146	0210220
6	CLEANING FAN (490 - 980 RPM)	1	H152180	1410203
7	FEEDERHOUSE FIXED SPEED W/ REVERSER	1	H203473	0303343
8	VARIABLE SPEED (STANDARD CAPACITY)	1	H203393	1411351
8	VARIABLE SPEED (HIGH CAPACITY)	1	H218728	0212364
9	STRAW SPREADER	1	H128234	1401412
10	AIR FLOW DRIVE	1	H171386	0301211
11	STRAW CHOPPER (FRONT)	1	H157726	0223404 EE-TECH

9660 STS

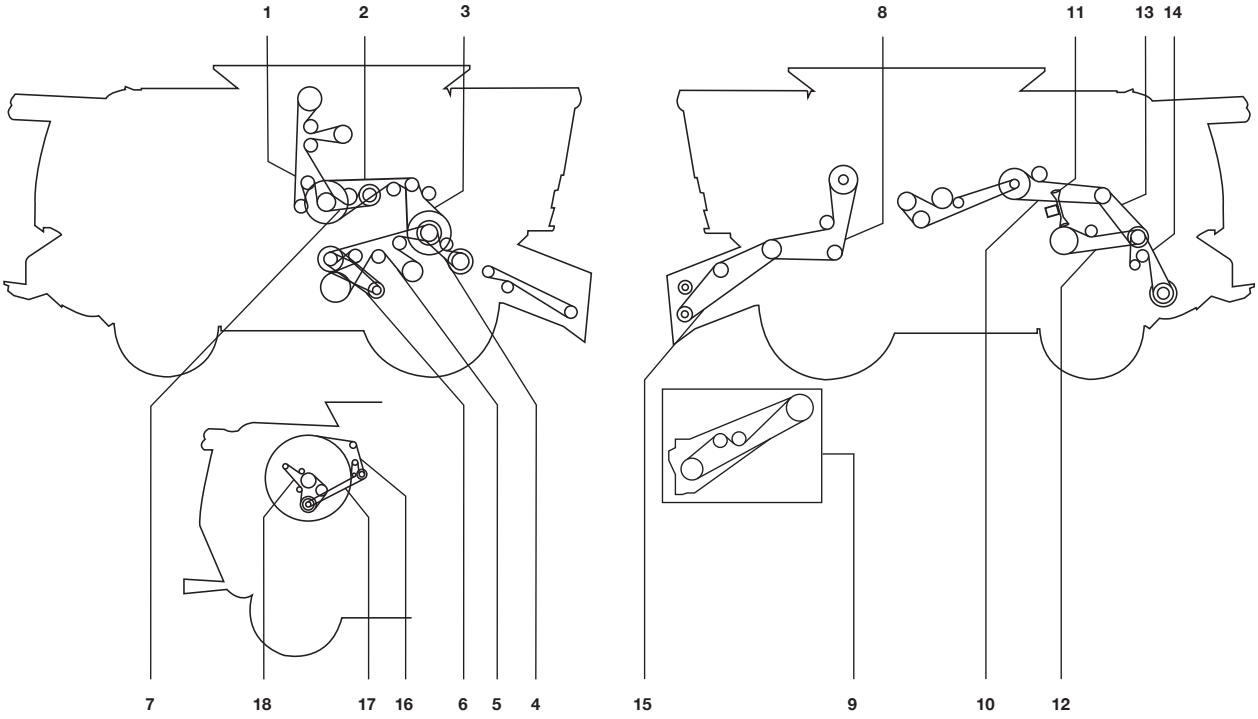

			OE	
1	CLEAN GRAIN ELEVATOR	1	H218645	1402501
2	R.H. JACKSHAFT, REAR	1	H154723	0902289
2	R.H. JACKSHAFT, FRONT	2	AH150678	1402217
2	R.H. JACKSHAFT, FRONT (EDIBLE BEAN)	1	A-C144	2002283
3	FEED ACCELERATOR, STANDARD SPEED -715400	1	H221731	0227208
3	FEED ACCELERATOR, STANDARD SPEED 715401-	1	H236472	0257264
3	FEED ACCELERATOR, SLOW SPEED	1	H221732	0227204
3	FEED ACCELERATOR, HIGH SPEED	1	H221733	0227218
4	SHOE FAN AND CONVEYOR AUGERS	1	H175587	0202517
5	CLEANING FAN	1	H206048	0810190
5	CLEANING FAN, SLOW SPEED	1	H211601	0210209
6	TAILINGS AUGER AND ELEVATOR	1	H154731	0402159
6	TAILINGS AUGER AND ELEVATOR (EDIBLE BEAN)	1	A-C72	0102148
7	HEADER AND REEL PUMP, STANDARD CAPACITY	1	H156796	0203363
7	HEADER AND REEL PUMP, HIGH CAPACITY	1	H156541	0227408
8	UNLOADING AUGER SYSTEM	2	AH160080	0202235
9	VARIABLE ROTOR DRIVE	1	H221498	0251498
10	DISCHARGE BEATER	1	H168301	0102257
11	COUNTERSHAFT, DISCHARGE BEATER AND CHOPPER	1	HXE15671	0227242
12	STRAW CHOPPER	1	H235564	0223316 EE-TECH
13	VARIABLE DRIVE FEEDER HOUSE, STANDARD CAPACITY	1	H201334	0211310
13	VARIABLE DRIVE FEEDER HOUSE, HIGH CAPACITY	1	H218726	0212325
13	VARIABLE DRIVE FEEDER HOUSE, HIGH CAPACITY (HIGH TORQUE)	1	H220911	0217141

9660 STS (CONTINUED)

			OE	
14	FIXED SPEED FEEDER HOUSE	1	H203474	0203302
15	ROTARY SCREEN DRIVE, SCREEN SIDE -715400	1	H175628	0200328
15	ROTARY SCREEN DRIVE, SCREEN SIDE 715401-	1	H214241	2500346
15	ROTARY SCREEN DRIVE, ENGINE SIDE -715400	1	H206807	0300137
15	ROTARY SCREEN DRIVE, ENGINE SIDE 715401-	1	H213353	0100160
16	ALTERNATOR, 95 AMP	1	R135606	0285306
16	ALTERNATOR, 185 AMP	1	R135609	0285310
16	ALTERNATOR, 200 AMP	1	AT262958	0285337

9670 STS (NA EDITION)

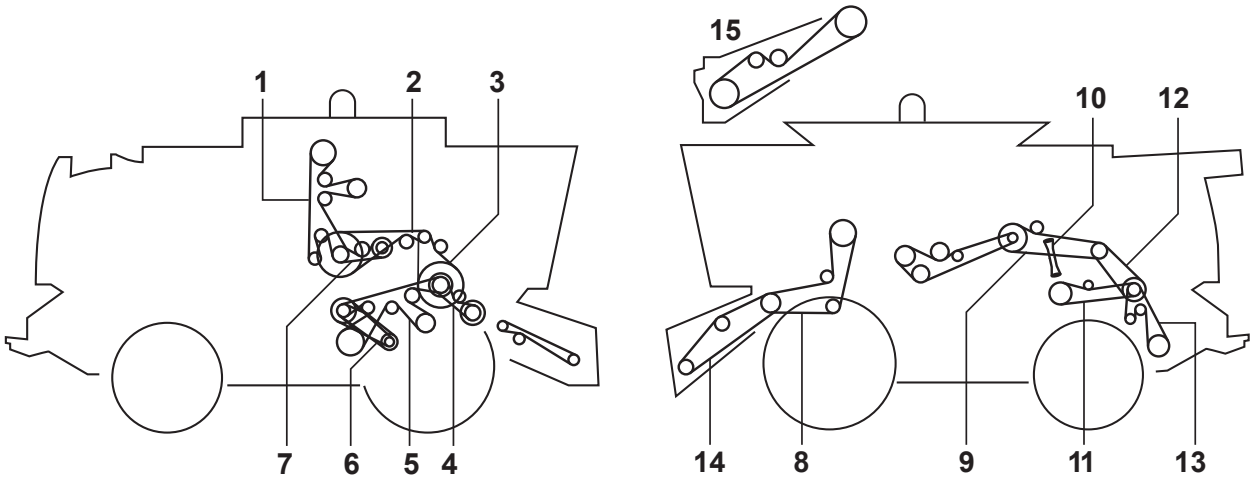

			OE	
1	CLEAIN GRAIN ELEVATOR	1	H218645	1402501
2	RIGHT HAND JACKSHAFT (REAR)	1	H154723	0902289
3	RIGHT HAND JACKSHAFT (FRONT)	2	AH150678	1402217
3	RIGHT HAND JACKSHAFT (FRONT) EDIBLE BEAN	1	A-C144	2002283
4	FEED ACCELERATOR, STANDARD SPEED	1	H236472	0257264
4	FEED ACCELERATOR, SLOW SPEED	1	H221732	0227204
4	FEED ACCELERATOR, HIGH SPEED	1	H221733	0227218
4	THANK YOU GATES	1	H230230	0257274
5	SHOE FAN AND CONVEYOR AUGERS	1	H175587	0202517
6	CLEANING FAN	1	H230909	0210192
6	CLEANING FAN, SLOW SPEED	1	H215389	0210213
7	TAILINGS AUGER AND ELEVATOR	1	H154731	0402159
7	TAILINGS AUGER AND ELEVATOR (EDIBLE BEAN)	1	A-C72	0102148
8	HEADER AND REEL PUMP (FIXED SPEED)	1	H156796	0203363
8	HEADER AND REEL PUMP (VARIABLE SPEED)	1	H156541	0227408
8	HEADER AND REEL PUMP (MULTI SPEED FEEDERHOUSE DRIVE)	1	H229018	0244438
9	UNLOADING AUGER SYSTEM	2	AH160080	0202235
10	VARIABLE ROTOR DRIVE	1	H221498	0251498
11	DISCHARGE BEATER	1	H168301	0102257
12	COUNTERSHAFT, DISCHARGE BEATER AND CHOPPER	1	HXE15671	0227242
12	REGULAR	1	HXE10556	0227253
13	STRAW CHOPPER	1	H232997	3023237
13	STRAW CHOPPER (CIS)	1	H235564	0223316 EE-TECH
14	VARIABLE SPEED FEEDER HOUSE DRIVE	1	H218726	0212325
14	VARIABLE SPEED FEEDER HOUSE DRIVE (HIGH SPEED)	1	H220911	0217141
15	FIXED SPEED FEEDERHOUSE	1	H203474	0203302
15	FIXED SPEED FEEDERHOUSE (MULTI SPEED FEEDER HOUSE DRIVE)	1	H229019	0144386

9670 STS - 9770 STS (NA EDITION)

			OE	
1	CLEAN GRAIN ELEVATOR	1	H218645	1402501
2	R.H. JACKSHAFT, REAR	1	H154723	0902289
3	R.H. JACKSHAFT, FRONT	2	AH150678	1402217
3	R.H. JACKSHAFT, FRONT (EDIBLE BEAN)	1	A-C144	2002283
4	FEED ACCELERATOR, STANDARD SPEED	1	H236472	0257264
4	FEED ACCELERATOR, SLOW SPEED	1	H221732	0227204
4	FEED ACCELERATOR, HIGH SPEED	1	H221733	0227218
4	FEED ACCELERATOR, HIGH SPEED	1	H230230	0257274
5	SHOE FAN AND CONVEYOR AUGERS	1	H175587	0202517
6	CLEANING FAN	1	H230909	0210192
6	CLEANING FAN, SLOW SPEED	1	H215389	0210213
7	TAILINGS AUGER AND ELEVATOR	1	H154731	0402159
7	TAILINGS AUGER AND ELEVATOR (EDIBLE BEAN)	1	A-C72	0102148
8	HEADER AND REEL PUMP (FIXED SPEED)	1	H156796	0203363
8	HEADER AND REEL PUMP (VARIABLE SPEED)	1	H156541	0227408
8	HEADER AND REEL (MULTI SPEED FEEDER HOUSE DRIVE)	1	H229018	0244438
9	UNLOADING AUGER SYSTEM	2	AH160080	0202235
10	VARIABLE ROTOR DRIVE	1	H221498	0251498
11	DISCHARGE BEATER	1	H168301	0102257
12	COUNTERSHAFT, DISCHARGE BEATER AND CHOPPER (CIS)	1	HXE15671	0227242
12	COUNTERSHAFT, DISCHARGE BEATER AND CHOPPER (REGULAR)	1	HXE10556	0227253
13	STRAW CHOPPER	1	H232997	3023237
13	STRAW CHOPPER (CIS)	1	H235564	0223316 EE-TECH
14	VARIABLE SPEED FEEDER HOUSE DRIVE	1	H218726	0212325
14	VARIABLE SPEED FEEDER HOUSE DRIVE (HIGH SPEED)	1	H220911	0217141
15	FEEDER HOUSE (FIXED SPEED)	1	H203474	0203302
15	FEEDER HOUSE (FIXED SPEED) (MULTI SPEED FEEDER HOUSE DRIVE)	1	H229019	0144386

9670 STS - 9770 STS (SA EDITION)

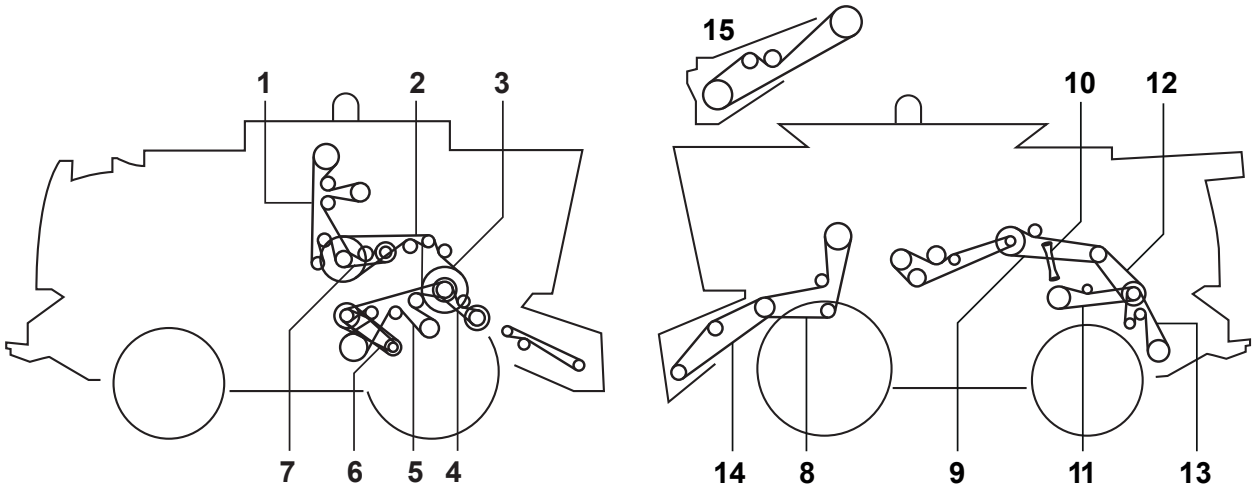

			OE	
1	CLEAN GRAIN ELEVATOR	1	H218645	1402501
2	R.H. JACKSHAFT, REAR	1	H154723	0902289
3	R.H. JACKSHAFT, FRONT	2	AH150678	1402217
3	R.H. JACKSHAFT, FRONT (EDIBLE BEAN)	1	A-C144	2002283
4	FEED ACCELERATOR, STANDARD SPEED	1	H236472	0257264
4	FEED ACCELERATOR, SLOW SPEED	1	H221732	0227204
4	FEED ACCELERATOR, HIGH SPEED	1	H221733	0227218
5	SHOE FAN AND CONVEYOR AUGERS	1	H175587	0202517
6	CLEANING FAN	1	H206048	0810190
6	CLEANING FAN, SLOW SPEED	1	H215389	0210213
7	TAILINGS AUGER AND ELEVATOR	1	H154731	0402159
7	TAILINGS AUGER AND ELEVATOR (EDIBLE BEAN)	1	A-C72	0102148
8	HEADER AND REEL PUMP (FIXED SPEED)	1	H156796	0203363
8	HEADER AND REEL PUMP (VARIABLE SPEED)	1	H156541	0227408
8	HEADER AND REEL (MULTI SPEED FEEDER HOUSE DRIVE)	1	H229018	0244438
9	UNLOADING AUGER SYSTEM	2	AH160080	0202235
10	VARIABLE ROTOR DRIVE	1	H221498	0251498
11	DISCHARGE BEATER	1	H168301	0102257
12	COUNTERSHAFT, DISCHARGE BEATER AND CHOPPER	1	H223385	0227253
13	STRAW CHOPPER	1	H232997	3023237
13	STRAW CHOPPER (CIS)	1	H204747	0223316 EE-TECH
14	VARIABLE SPEED FEEDER HOUSE DRIVE	1	H218726	0212325
14	VARIABLE SPEED FEEDER HOUSE DRIVE	1	H220911	0217141
15	VARIABLE SPEED FEEDER HOUSE DRIVE (HIGH SPEED)	1	H203474	0203302
15	ROTARY SCREEN DRIVE, SCREEN SIDE	1	H229019	0144386

9760 STS

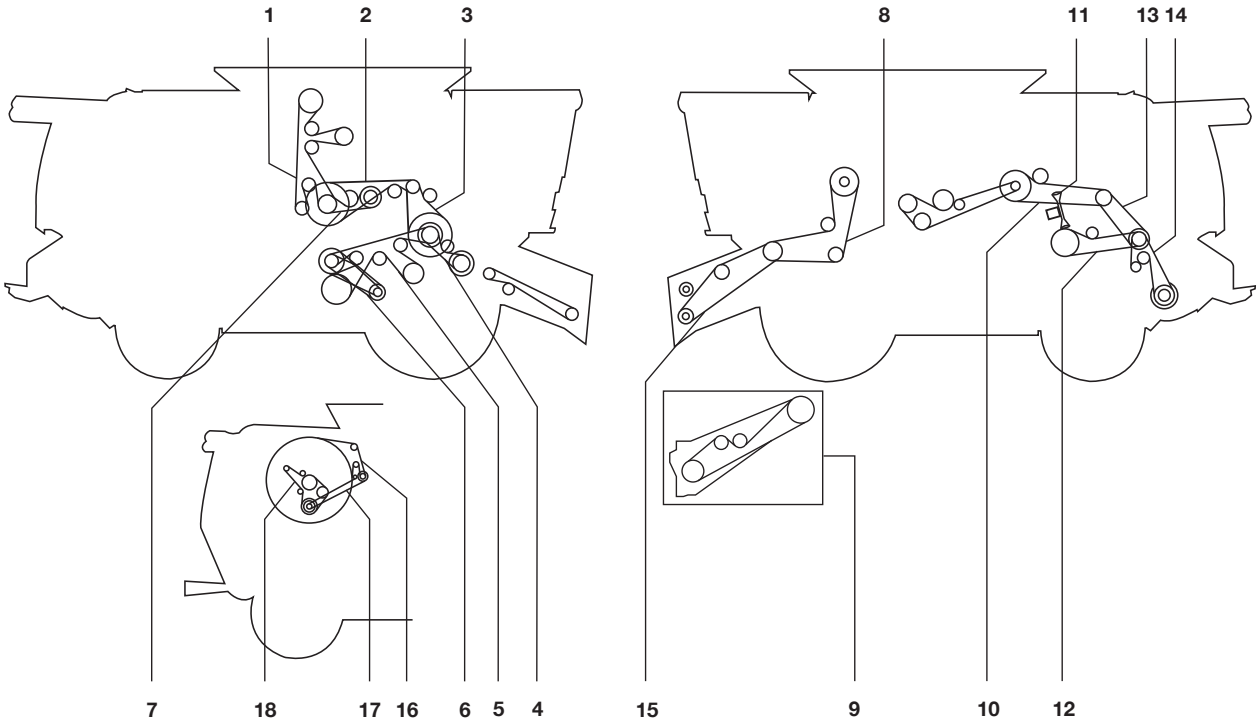

			OE	
1	CLEAN GRAIN ELEVATOR DRIVE	1	H218645	1402501
2	JACKSHAFT - RIGHT HAND (REAR)	1	H154723	0902289
3	JACKSHAFT - (FRONT) RIGHT HAND	2	AH150678	1402217
3	JACKSHAFT - (FRONT) RIGHT HAND (EDIBLE BEAN)	1	A-C144	2002283
4	FEEDER ACCELERATOR - STANDARD SPEED (SERIAL NR. 715301 - ...)	1	H211581	0257264
4	FEEDER ACCELERATOR - STANDARD SPEED (SERIAL NR. ... - 715301)	1	H221731	0227208
4	FEEDER ACCELERATOR - LOW SPEED	1	H221732	0227204
4	FEEDER ACCELERATOR - HIGH SPEED	1	h221733	0227218
5	SHOE FAN AND CONVEYOR AUGERS	1	H175587	0202517
6	CLEANING FAN DRIVE	1	H206048	0810190
6	CLEANING FAN - SLOW SPEED	1	H211601	0210209
7	TAILINGS AUGER AND ELEVATOR	1	H154731	0402159
7	TAILINGS AUGER AND ELEVATOR (EDIBLE BEAN)	1	A-C72	0102148
8	HEADER AND REEL PUMP (STANDARD CAPACITY)	1	H156796	0203363
8	HEADER AND REEL PUMP (HIGH CAPACITY)	1	H156541	0227408
9	FEEDER HOUSE FIXED SPEED	1	H203474	0203302
10	UNLOADING AUGER DRIVE	2	AH160080	0202235
11	ROTOR VARIATOR DRIVE	1	H169449	0251449
12	DISCHARGE BEATER DRIVE	1	H168301	0102257
13	COUNTERSHAFT - DISCHARGE BEATER AND CHOPPER	1	H157514	0227242
14	STRAW CHOPPER DRIVE	1	H204747	0223316 EE-TECH
15	FEEDER HOUSE VARIABLE DRIVE (HIGH CAPACITY)	1	H218726	0212325
16	ROTARY SCREEN DRIVE - SCREEN SIDE	1	H175632	0200285
17	ROTARY SCREEN DRIVE - ENGINE SIDE	1	H206807	0300137
18	ALTERNATOR DRIVE (95 AMP)	1	R135606	0285306
18	ALTERNATOR DRIVE (185 AMP)	1	R135609	0285310

9770 STS

			OE	
1	CLEAN GRAIN ELEVATOR	1	H218645	1402501
2	RIGHT HAND JACKSHAFT (REAR)	1	H154723	0902289
3	RIGHT HAND JACKSHAFT (FRONT)	2	AH150678	1402217
3	RIGHT HAND JACKSHAFT (FRONT) EDIBLE BEAN	1	A-C144	2002283
4	FEED ACCELERATOR, STANDARD SPEED	1	H236472	0257264
4	FEED ACCELERATOR, SLOW SPEED	1	H221732	0227204
4	FEED ACCELERATOR, HIGH SPEED	1	H221733	0227218
4		1	H230230	0257274
5	SHOE FAN AND CONVEYOR AUGERS	1	H175587	0202517
6	CLEANING FAN	1	H230909	0210192
6	CLEANING FAN, SLOW SPEED	1	H215389	0210213
7	TAILINGS AUGER AND ELEVATOR	1	H154731	0402159
7	TAILINGS AUGER AND ELEVATOR (EDIBLE BEAN)	1	A-C72	0102148
8	HEADER AND REEL PUMP (FIXED SPEED)	1	H156796	0203363
8	HEADER AND REEL PUMP (VARIABLE SPEED)	1	H156541	0227408
8	HEADER AND REEL PUMP (MULTI SPEED FEEDERHOUSE DRIVE)	1	H229018	0244438
9	UNLOADING AUGER SYSTEM	2	AH160080	0202235
10	VARIABLE ROTOR DRIVE	1	H208431	0251431
11	DISCHARGE BEATER	1	H168301	0102257
12	COUNTERSHAFT, DISCHARGE BEATER AND CHOPPER	1	HXE15671	0227242
12	REGULAR	1	HXE10556	0227253
12	HEAVY DUTY	1	HXE10501	0244285
13	STRAW CHOPPER	1	H223212	0227290
14	VARIABLE SPEED FEEDER HOUSE DRIVE	1	H218726	0212325
14	VARIABLE SPEED FEEDER HOUSE DRIVE (HIGH SPEED)	1	H220911	0217141
15	FIXED SPEED FEEDERHOUSE	1	H203474	0203302
15	FIXED SPEED FEEDERHOUSE (MULTI SPEED FEEDER HOUSE DRIVE)	1	H229019	0144386

9860 STS (NA EDITION)

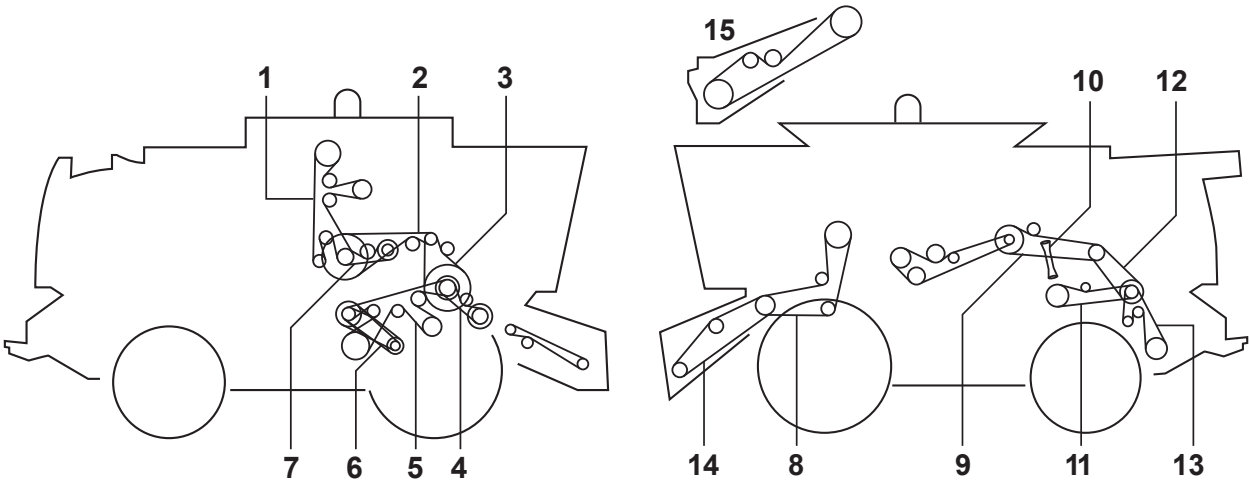

			OE	
1	CLEAN GRAIN ELEVATOR	1	H218645	1402501
2	RIGHT HAND JACKSHAFT (REAR)	1	H154723	0902289
3	RIGHT HAND JACKSHAFT (FRONT)	2	AH150678	1402217
3	RIGHT HAND JACKSHAFT FRONT (EDIBLE BEAN)	1	A-C144	2002283
4	FEED ACCELERATOR, STANDARD SPEED	1	H221731	0227208
4	FEED ACCELERATOR, STANDARD SPEED	1	H236472	0257264
4	FEED ACCELERATOR, SLOW SPEED	1	H201821	0227204
4	FEED ACCELERATOR, SLOW SPEED	1	H221732	0227204
4	FEED ACCELERATOR, HIGH SPEED	1	H205209	0227218
4	FEED ACCELERATOR, HIGH SPEED	1	H221733	0227218
5	SHOE FAN AND CONVEYOR AUGERS	1	H175587	0202517
6	CLEANING FAN	1	H206048	0810190
6	CLEANING FAN (SLOW SPEED)	1	H211601	0210209
7	TAILINGS AUGER AND ELEVATOR	1	H154731	0402159
7	TAILINGS AUGER AND ELEVATOR (EDIBLE BEAN)	1	CP72	0102148
7	TAILINGS AUGER AND ELEVATOR (EDIBLE BEAN)	1	A-C72	0102148
8	HEADER AND REEL PUMP, STANDARD CAPACITY	1	H156796	0203363
8	HEADER AND REEL PUMP, HIGH CAPACITY	1	H156541	0227408
9	UNLOADING AUGER SYSTEM	2	AH160080	0202235
10	VARIABLE ROTOR DRIVE	1	H207851	0251498
10	VARIABLE ROTOR DRIVE	1	H208431	0251431
11	DISCHARGE BEATER	1	H168301	0102257
12	COUNTERSHAFT, DISCHARGE BEATER AND CHOPPER (HEAVY DUTY)	1	H201596	0244278
12	COUNTERSHAFT, DISCHARGE BEATER AND CHOPPER (STANDARD)	1	HXE15671	0227242
13	STRAW CHOPPER	1	H220747	1527332
13	STRAW CHOPPER (PREMIUM GRAIN)	1	H217352	1527332
14	VARIABLE DRIVE FEEDER HOUSE	1	H218726	0212325
14	VARIABLE DRIVE FEEDER HOUSE (EXTRA HEAVY DUTY)	1	H220911	0217141
15	FIXED SPEED FEEDER HOUSE	1	H203474	0203302
15	EXTRA HEAVY DUTY	1	H174885	0227353

9870 STS (NA EDITION)

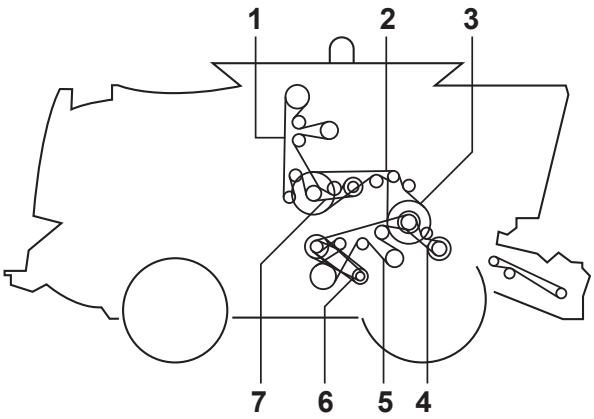

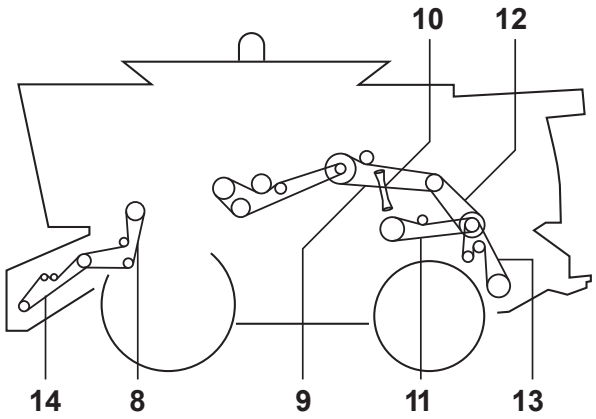

			OE	
1	CLEAN GRAIN ELEVATOR	1	H223230	0203515
2	RIGHT HAND JACKSHAFT (REAR)	1	H154723	0902289
2	RIGHT HAND JACKSHAFT (FRONT) EDIBLE BEAN	1	A-C144	2002283
3	RIGHT HAND JACKSHAFT (FRONT)	2	AH150678	1402217
4	FEED ACCELERATOR, STANDARD SPEED	1	H236472	0257264
4	FEED ACCELERATOR, SLOW SPEED	1	H221732	0227204
4	FEED ACCELERATOR, HIGH SPEED	1	H221733	0227218
4	FEED ACCELERATOR, HIGH SPEED	1	H230230	0257274
5	SHOE FAN AND CONVEYOR AUGERS	1	H175587	0202517
6	CLEANING FAN	1	H230909	0210192
6	CLEANING FAN, SLOW SPEED	1	H215389	0210213
7	TAILINGS AUGER AND ELEVATOR	1	H154731	0402159
7	TAILINGS AUGER AND ELEVATOR (EDIBLE BEAN)	1	A-C72	0102148
8	HEADER AND REEL PUMP, HIGH CAPACITY	1	H156541	0227408
8	HEADER AND REEL PUMP, MULTI-SPEED FEEDER HOUSE DRIVE	1	H229018	0244438
9	UNLOADING AUGER SYSTEM	2	AH160080	0202235
10	VARIABLE ROTOR DRIVE	1	H208431	0251431
11	DISCHARGE BEATER	1	H219182	0102257
11	DISCHARGE BEATER (CIS)	1	H168301	0102257
12	COUNTERSHAFT, DISCHARGE BEATER AND CHOPPER (STANDARD DUTY)	1	HXE10556	0227253
12	COUNTERSHAFT, DISCHARGE BEATER AND CHOPPER (HEAVY DUTY)	1	HXE10501	0244285
12	COUNTERSHAFT, DISCHARGE BEATER AND CHOPPER (CIS)	1	HXE15671	0227242
13	STRAW CHOPPER	1	H223212	0227290
13	STRAW CHOPPER (CIS)	1	H235564	0223316 EE-TECH
14	FIXED SPEED FEEDER HOUSE (EXTRA HEAVY DUTY)	1	H174885	0227353
14	FIXED SPEED FEEDER HOUSE MULTI-SPEED FEEDER HOUSE DRIVE	1	H229019	0144386

JOHN DEERE

9880

			OE	Gates
1	UNLOADING AUGER DRIVE CHAIN	1	AH144891	Chain
2	SEPARATOR VARIATOR HIGH HP	1	H207851	0251498
3	SEPARATOR VARIATOR	1	H208431	0251431
4	STRAW CHOPPER JACKSHAFT DRIVE	1	H225035	0244275
5	STRAW CHOPPER DRIVE	1	H217352	1527332
6	CHAIN LINK	1	AH167161	Chain

9900

			OE	Gates
1	COMPRESSOR	1	N113642	0100083
2	FAN/ALTERNATOR	1	AT23317	0173245
3	FAN ROTOR	1	N124460	0268271
4	HYDRAULIC PUMP	1	N115368	0201092
5	HYDRAULIC PUMP	1	N117398	0201092
6	UNIT DRIVE (LEFT HAND)	1	N111527	0102137
7	UNIT DRIVE (RIGHT HAND)	1	N121116	2002167

9910

			OE	Gates
1	FAN	1	N129368	0201146
2	FAN/ALTERNATOR	1	AN273251	0173249
3	HYDRAULIC PUMP	1	N117398	0201092
4	UNIT DRIVE (LEFT HAND)	1	N111527	0102137
5	UNIT DRIVE (RIGHT HAND)	1	N121116	2002167
6	WATER PUMP	1	M1900T	0173206

9920

			OE	
1	CONDENSER	1	N117674	1400087
2	ALTERNATOR AND FAN DRIVE	2	AN190205	0272247
3	FAN DRIVE	1	N129368	0201146
4	HYDRAULIC PUMP DRIVE	1	E61326	0201102
5	UNIT DRIVE LEFT HAND	1	N111527	0102137
6	UNIT DRIVE RIGHT HAND	1	N121116	2002167
7	WATER LINE	1	M1900T	0173206

9930

			OE	
1	CONDENSER	1	N117674	1400087
2	ALTERNATOR AND FAN DRIVE	2	AN190205	0272247
3	FAN DRIVE	1	N129368	0201146
4	HYDRAULIC PUMP DRIVE	1	E61326	0201102
5	LUBRICATION PUMP	1	M41592	0200076
6	UNIT DRIVE LEFT HAND	1	N111527	0102137
7	UNIT DRIVE RIGHT HAND	1	N121116	2002167
8	WATER LINE	1	M1900T	0173206

9935

			OE	
1		1	R123465	1485332
2		1	N220907	1423192

9940

			OE	
1	COMPRESSOR DRIVE	1	R71602	0172216
2	ALTERNATOR AND FAN DRIVE	2	AR86496	0399322
3	FAN DRIVE	1	N193822	0225225 EE-TECH
4	HYDROSTATIC PUMP DRIVE	1	N190043	0173223
5	UNIT DRIVE	2	AN190948	0902157
6	WATER LINE	1	N31649	0283227

JOHN DEERE

9950

			OE	
1	COMPRESSOR DRIVE	1	R73189	0272218
2	ALTERNATOR AND FAN DRIVE	2	RE29018	0372260
3	FAN DRIVE	1	N193822	0225225 EE-TECH
4	HYDROSTATIC PUMP DRIVE	1	N190043	0173223
5	LUBRICATION PUMP	1	M42485	0200086
6	UNIT DRIVE	2	AN190948	0902157
7	WATERPUMP DRIVE	1	N31649	0283227

9960

			OE	
1	COMPRESSOR DRIVE	1	R73189	0272218
2	ALTERNATOR AND FAN DRIVE	2	RE29018	0372260
3	ALTERNATOR AND FAN DRIVE	2	RE41942	0372258
4	FAN AIR SYSTEM	1	N193822	0225225 EE-TECH
5	LUBRICATION PUMP	1	M82720	0200085
6	UNIT DRIVE (IN LINE)	1	AN194751	0301183
7	UNIT DRIVE (IN LINE)	2	AH96333	0201191
8	UNIT DRIVE (CONVENTIONAL)	2	AN194750	0301183
9	UNIT DRIVE (CONVENTIONAL)	2	AH96333	0201191
10	WATERPUMP DRIVE	1	T10552	0173197
11		2	AN194916	0202187
12		2	AN194917	2602194

9970

			OE	
1		1	R116307	0272210
2		2	AN274672	0102184
3		2	AN274673	0172216

9976

			OE	
1		1	M71135	1473203
2		1	M40757	0200146
3		2	AN274215	0201102
4		1	N277058	0224144
5		1	N274995	1424251
6		2	AN273299	0302146
7		1	T626T	0173225

9980

			OE	
1	CLEAN GRAIN ELEVATOR DRIVE	1	H158512	1402501
2		2	H154723	0902289
3		2	AH150678	1402217
4		1	H201821	0227204
5	SHOE FAN AND CONVEYOR AUGERS	1	H175587	0202517
6	CLEANING FAN DRIVE	1	H165072	0210189
8		1	H154731	0402159
9		1	H175628	0200328
10		1	H178037	0300137
11		1	R135609	0285310
12	STRAW CHOPPER (REAR)	2	H156541	0227408
14		2	AH160080	0202235
15		1	H174451	☎
16		1	H168301	0102257
17	STRAW CHOPPER JACKSHAFT DRIVE	1	H174367	0244275
18	SHIELD PIVOT CHOPPER	1	H174364	☎
19		2	H174885	0227353

C670

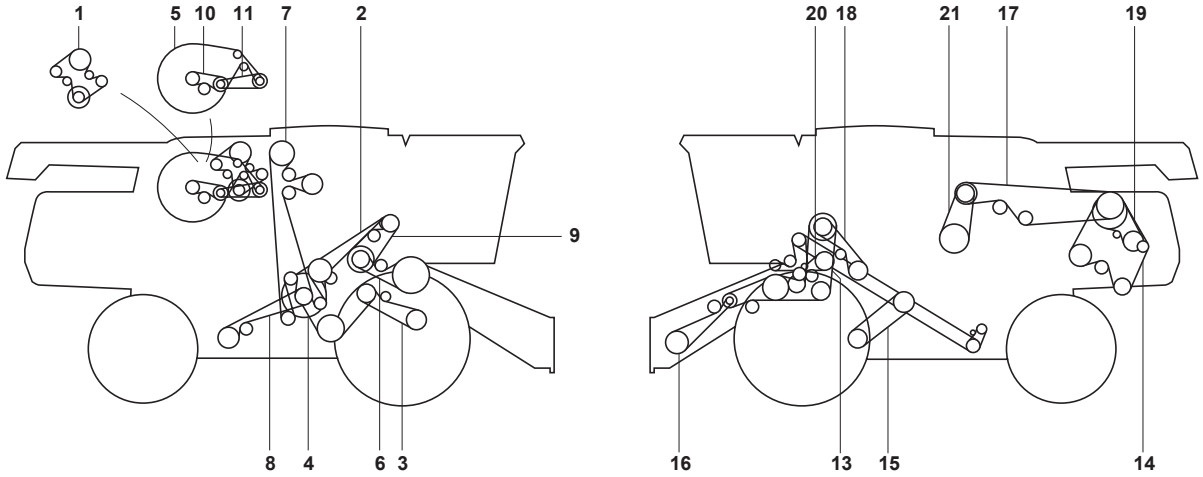

			OE	
1		1	R504618	1485332
2		1	H128010	2002365
3		1	Z67285	0301183
4		1	Z58752	1902354
5		1	H175628	0200328
6		1	H115881	1425257
7		1	HXE51300	0202609
8		1	N110085	0302251
9		1	HXE51101	0215195
10		1	H146636	0217106
11		1	H174455	0385331
12		1	Z81937	0202111
13		1	H176765	0227482
13		1	HXE12425	0224476
14		1	H161945	0227437
15		1	H152180	1410203
15		1	H152146	0210220
16		1	H176766	0227255
16		1	H202821	0227262
16		1	H201851	0227408
16		1	HXE12426	0224256
16		1	HXE12427	1424250 EE-TECH
17		1	HXE36535	0244394
18		1	H165708	0223201
19		1	H164368	0244287
20		1	H139963	0201109
21		1	AH158880	0102181

CTS (EUROPE)

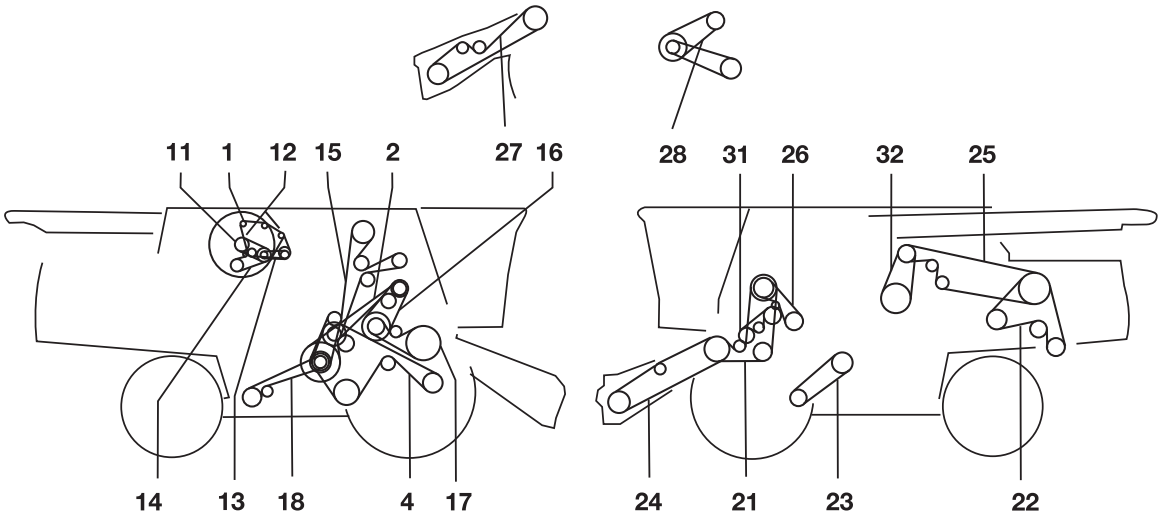

			OE	
1	ALTERNATOR DRIVE	1	H101813	0200110
2	COUNTERSHAFT (SECONDARY)	1	H128010	2002365
4	STRAW WALKER - CONVEYOR AUGERS	1	H131169	0202493
11	COOLING FAN	2	AH140623	0223148
11	COOLING FAN	1	H153297	0223148
12	COOLING FAN	1	H145158	1400286
13	ROTARY SCREEN DRIVE	1	H134216	/
13	ROTARY SCREEN DRIVE	1	H146636	0217106
14	AIR CONDITIONING COMPRESSOR DRIVE	1	H134437	0372245
15	CLEANING ELEVATOR (GRAIN)	1	H141167	0202610
16	CYLINDER DRIVE INTERMEDIATE	1	H115759	0215195
16	CYLINDER DRIVE INTERMEDIATE	1	H162629	0215195
17	CYLINDER DRIVE, SLOW SPEED	1	H118618	0325248
17	CYLINDER DRIVE	1	H115881	1425257
18	TAILINGS AUGER AND ELEVATOR (LOWER)	1	N110085	0302251
21	EQUIPMENT FRONT END	1	H140160	1403325
22	STRAW CHOPPER (FRONT)	1	H141417	0102257
23	FAN DRIVE REGULAR (N=750-1350 RPM)	1	H140404	0210213
23	SLOW SPEED (N=490-980 RPM)	1	H137264	0203187
24	DRUM DRIVE VARIABLE SPEED	1	H125711	0211357
25	SEPARATOR DRIVE	1	H141429	0244481
26	BEATER DRIVE	1	H143700	0402155
27	FEEDER HOUSE FIXED SPEED	1	H126345	0203351
28	STRAW SPREADER DRIVE	1	E61326	0201102
28	STRAW SPREADER DRIVE	1	P49604	1401180
28	CHAFF SPREADER DRIVE	1	M95728	0201215
31	STRIPPER BEATER	1	H139963	0201109
32	UNLOADING SYSTEM	1	AH127866	0302179

CTS (USA)

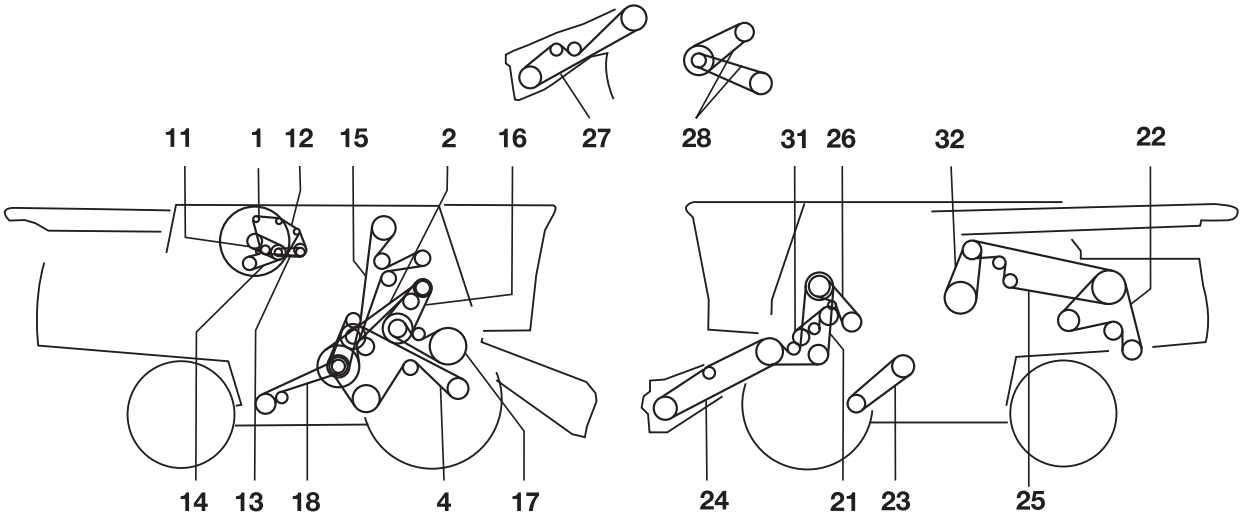

			OE	
1	ALTERNATOR DRIVE	1	H101813	0200110
2	COUNTERSHAFT (SECONDARY)	1	H128010	2002365
4	STRAW WALKER - CONVEYOR AUGERS	1	H131169	0202493
11	COOLING FAN	2	AH140623	0223148
11	COOLING FAN	1	H153297	0223148
12	COOLING FAN	1	H145158	1400286
13	ROTARY SCREEN DRIVE	1	H134216	/
13	ROTARY SCREEN DRIVE	1	H146636	0217106
14	AIR CONDITIONING COMPRESSOR DRIVE	1	H134437	0372245
15	CLEANING ELEVATOR (GRAIN)	1	H141167	0202610
16	CYLINDER DRIVE INTERMEDIATE	1	H115759	0215195
16	CYLINDER DRIVE INTERMEDIATE	1	H162629	0215195
17	CYLINDER DRIVE, SLOW SPEED	1	H118618	0325248
17	CYLINDER DRIVE	1	H115881	1425257
18	TAILINGS AUGER AND ELEVATOR (LOWER)	1	N110085	0302251
21	EQUIPMENT FRONT END	1	H140160	1403325
22	STRAW CHOPPER (FRONT)	1	H141417	0102257
23	FAN DRIVE REGULAR (N=750-1350 RPM)	1	H140404	0210213
23	SLOW SPEED (N=490-980 RPM)	1	H137264	0203187
24	DRUM DRIVE VARIABLE SPEED	1	H125711	0211357
25	SEPARATOR DRIVE	1	H141429	0244481
26	BEATER DRIVE	1	H143700	0402155
27	FEEDER HOUSE FIXED SPEED	1	H126345	0203351
28	STRAW SPREADER DRIVE	1	E61326	0201102
28	STRAW SPREADER DRIVE	1	P49604	1401180
29	CHAFF SPREADER DRIVE	1	M95728	0201215
31	STRIPPER BEATER	1	H139963	0201109
32	UNLOADING SYSTEM	1	AH127866	0302179

CTS 2 (USA)

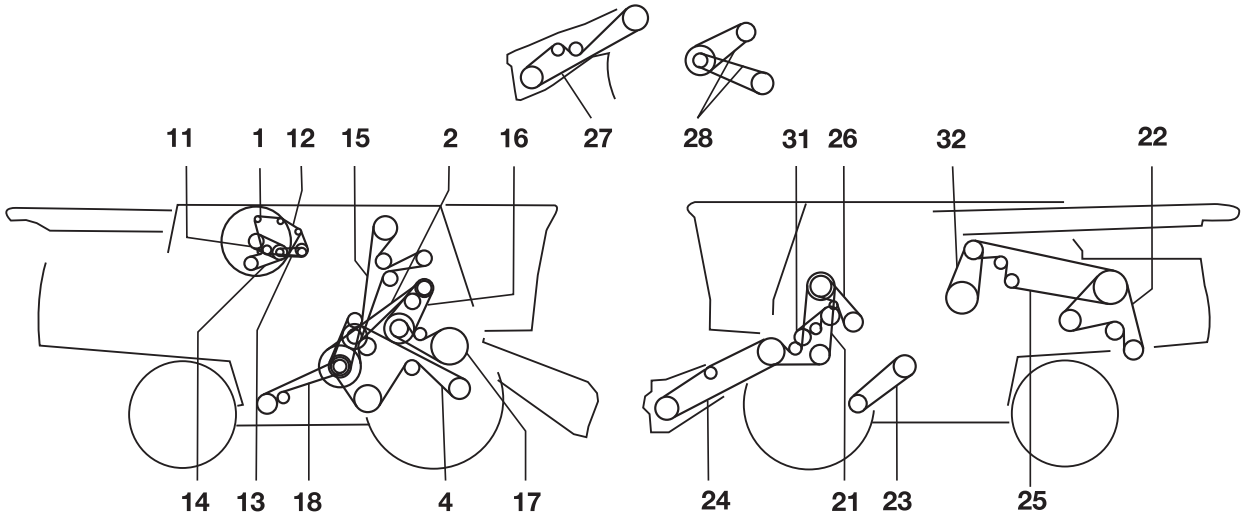

			OE	
1	ALTERNATOR DRIVE	1	H163515	0285325
2	COUNTERSHAFT (SECONDARY)	1	H128010	2002365
4	STRAW WALKER - CONVEYOR AUGERS	1	H131169	0202493
5	COOLING FAN	1	H161796	1901094
6		1	H145158	1400286
7	ROTARY SCREEN DRIVE	1	H160406	0217140
8	AIR CONDITIONING COMPRESSOR DRIVE	1	H134437	0372245
9	CLEAN GRAIN ELEVATOR DRIVE	1	H160171	0202610
10	CYLINDER DRIVE INTERMEDIATE	1	H162629	0215195
11	CYLINDER DRIVE, SLOW SPEED	1	H118618	0325248
11	CYLINDER DRIVE	1	H115881	1425257
12	TAILINGS AUGER AND ELEVATOR (LOWER)	1	H110085	0302251
13	STRIPPER BEATER	1	H139963	0201109
14	UNLOADING SYSTEM	1	AH127866	0302179
15	EQUIPMENT FRONT END	1	H151952	1403325
16	STRAW CHOPPER (FRONT)	1	H162541	0227344
17	SLOW SPEED (N=490-980 RPM) OPTIONAL	1	H152180	1410203
17	FAN DRIVE REGULAR (N=750-1350 RPM)	1	H152146	0210220
18	DRUM DRIVE VARIABLE SPEED	1	H161648	0211357
19	SEPARATOR DRIVE	1	H141429	0244481
20	BEATER DRIVE	1	H143700	0402155
21	FEEDER HOUSE FIXED SPEED	1	H126345	0203351
22	STRAW SPREADER DRIVE	1	E61326	0201102
22		1	P49604	1401180
23	CHAFF SPREADER DRIVE	1	M95728	0201215

CTS II

			OE	
1		1	M140021	0204221
2		2	H155525	0223318

S550 (MODEL YEAR 12/13)

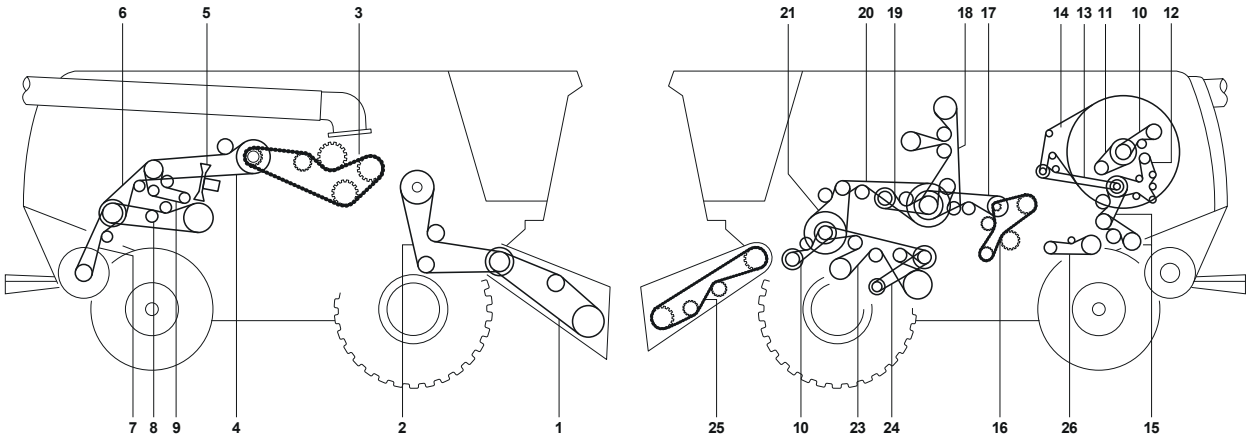

			OE	
1	VAR FEEDER HOUSE (HEAVY DUTY)	1	H218726	0212325
1	FIXED FEEDER HOUSE (STANDARD DUTY)	1	H203474	0203302
2	E-CLUTCH TO FEEDER HOUSE (HEAVY DUTY)	1	HXE16927	0227395
2	E-CLUTCH TO FEEDER HOUSE (STANDARD DUTY)	1	HXE16928	0203354
3	UNLOADER-CHAIN (100% UNLOAD RATE-REGULAR)	1	AH144891	Chain
4	UNLOADER-BELT	2	AH160080	0202235
5	ROTOR DRIVE (STANDARD DUTY)–GATES	1	H221498	0251498
6	PTO TO STRAW CHOPPER JACK SHAFT (2HC)	1	HXE15671	0227242
7	STRAW CHOPPER JACK SHAFT TO STRAW CHOPPER (2HB)	1	H235564	0223316 EE-TECH
8	DISCHARGE BEATER (RAW EDGE)	1	H219182	0102257
11	ENGINE FAN & ALTERNATOR BELT (6.8L)	1	R521053	0285329
13	ROTARY SCREEN DRIVE (ENGINE SIDE)	1	H213353	0100160
14	ROTARY SCREEN DRIVE (SCREEN SIDE)	1	H221273	0200365
18	CLEAN GRAIN ELEVATOR	1	H218645	1402501
19	TAILINGS ELEVATOR	1	H154731	0402159
20	POWERSHAFT TO ELEVATOR JACK SHAFT	1	H154723	0902289
21	POWERSHAFT TO FEED ACCELERATOR JACK SHAFT	2	AXE13650	0202203
22	FEED ACCELERATOR-STANDARD SPEED (HIGH-CAPACITY 440/800 RPM)	1	H236472	0257264
22	FEED ACCELERATOR (SLOW SPEED KIT 320/790 RPM)	1	H221732	0227204
23	SHOE/CONVEYOR AUGER/FAN JACK SHAFT	1	H175587	0202517
24	CLEANING FAN (STANDARD SPEED)	1	HXE15594	0210192
25	RIGHT HAND CHAIN DRIVE	1	AH232566	Chain

S560

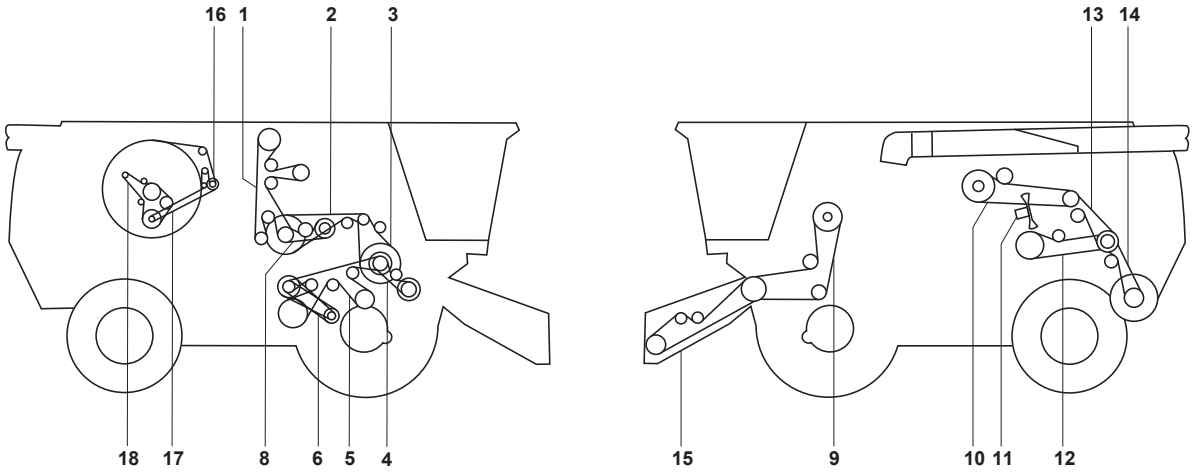

			OE	
1		1	H218645	1402501
2		1	H154723	0902289
3	...-740200	1	AH202773	0302200
3	740201-....	1	AXE13650	0202203
4		1	H221733	0227218
4		1	H221732	0227204
5		1	H175587	0202517
6		1	H230909	0210192
6		1	H215389	0210213
8		1	H154731	0402159
9		1	H209507	2027389
10		1	AH160080	0202235
11		1	H221498	0251498
12		1	H219182	0102257
13		1	H201596	0244278
14		1	H220747	1527332
15		1	H174885	0227353
16		1	H221273	0200365
17		1	H213353	0100160
18		1	R503505	0785321

S650 (... - 785001)

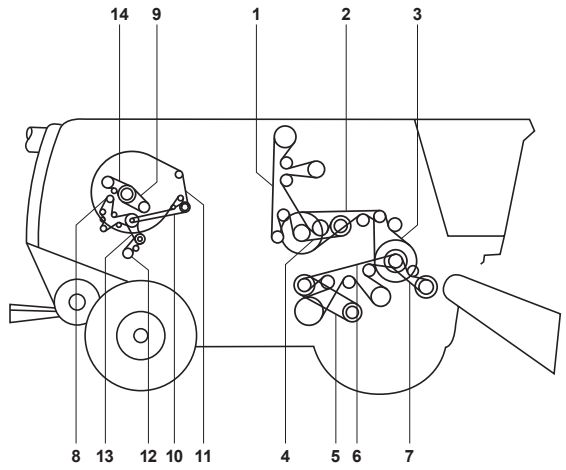

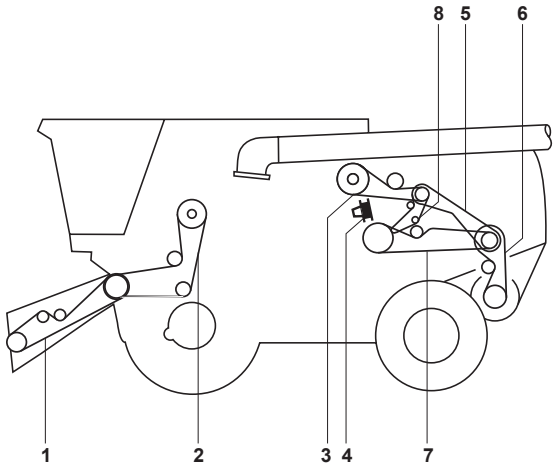

			OE	
1	FEEDERHOUSE DRIVE	1	H218726	0212325
2	FEEDERHOUSE FRONT END DRIVE	1	HXE95935	0227406
3	GRAIN TANK AUGER DRIVE	1	AH160080	0202235
4	SEPARATOR ROTOR DRIVE	1	HXE46027	0251449
5	STRAW SPREADER DRIVE DUAL CHOPPER DRIVE	1	H241230	0744331
6	DUAL CHOPPER DRIVE	1	H241212	3027274
7	DISCHARGE BEATER DRIVE	1	HXE15556	0302326
8	AFTER TREATMENT BLOWER DRIVE	1	HXE69280	0284297
9	CLEAN GRAIN ELEVATOR DRIVE	1	H218645	1402501
10	SEPARATOR JACKSHAFT DRIVE REAR	1	H154723	0902289
11	SEPARATOR JACKSHAFT DRIVE FRONT	1	HXE88564	0227263
12	TAILINGS ELEVATOR DRIVE	1	H154731	0402159
13	CLEANING SHOE FAN DRIVE	1	HXE99294	1310191
14	CONVEYOR AUGER DRIVE	1	HXE102288	0227564
15	FEED ACCELERATOR STONE TRAP DRIVE STANDARD SPEED	1	HXE95511	0257264
15	FEED ACCELERATOR STONE TRAP DRIVE SLOW SPEED	1	H221732	0227204
16	ENGINE FRONT DRIVE	1	H238822	0285328
17	VARIABLE SPEED FAN DRIVE	1	HXE22617	0211130
18	COOLING PACKAGE AIR SCREEN DRIVE - ENGINE SIDE	1	H238867	1400153
19	COOLING PACKAGE AIR SCREEN DRIVE - SCREEN SIDE	1	H221273	0200365
20	VACUUM FAN DRIVE - LOWER	1	HXE68016	0200082
21	VACUUM FAN DRIVE - UPPER	1	HXE68015	0200093
22	AIR COMPRESSOR DRIVE	1	HXE71043	1585272

S660 (MODEL YEAR 12/13)

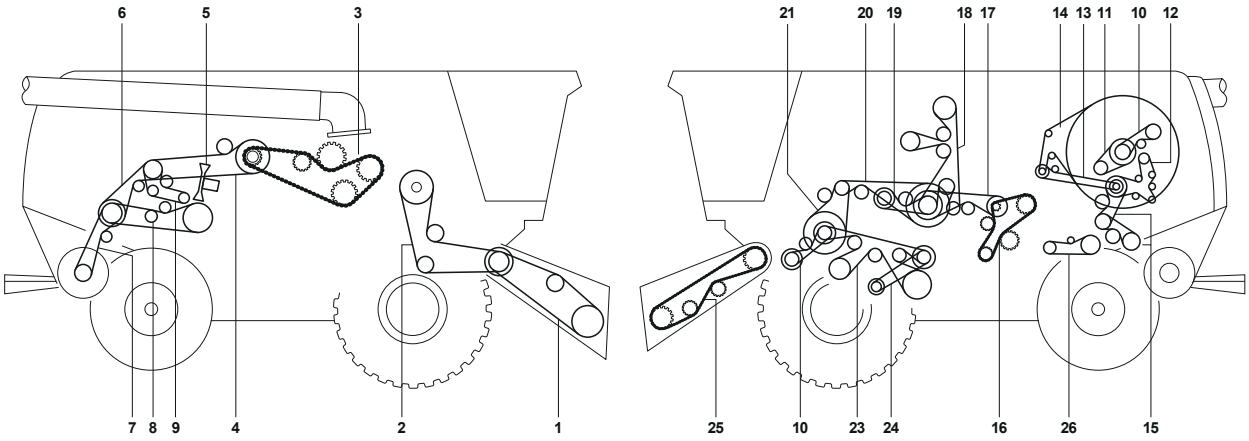

			OE	
1	VAR FEEDER HOUSE (HIGH TORQUE)	1	H220911	0217141
1	VAR FEEDER HOUSE (HEAVY DUTY)	1	H218726	0212325
1	FIXED FEEDER HOUSE (HEAVY DUTY & HIGH TORQUE)	1	H174885	0227353
1	FIXED FEEDER HOUSE (STANDARD DUTY)	1	H203474	0203302
2	E-CLUTCH TO FEEDER HOUSE (HEAVY DUTY)	1	H156541	0227408
2	E-CLUTCH TO FEEDER HOUSE (STANDARD DUTY)	1	H156796	0203363
3	UNLOADER-CHAIN (150% UNLOAD RATE)	1	AH202176	Chain
4	UNLOADER-BELT	2	AH160080	0202235
5	ROTOR DRIVE (STANDARD DUTY)–GATES	1	H221498	0251498
6	PTO TO STRAW CHOPPER JACK SHAFT (3HC) FC	1	H241230	0744331
7	STRAW CHOPPER JACK SHAFT TO STRAW CHOPPER (2HC) FC	1	H241212	3027274
7	STRAW CHOPPER JACK SHAFT TO STRAW CHOPPER (3HC) XFC	1	H240974	0244307
7	STRAW CHOPPER JACK SHAFT TO STRAW CHOPPER (1HC) XFC	1	H240972	0202222
8	DISCHARGE BEATER (HC)	1	HXE15556	0302326
11	ENGINE FAN BELT VARIABLE (9.0L)	1	HXE22617	0211130
12	ENGINE ALTERNATOR BELT (9.0L)	1	H238822	0285328
13	ROTARY SCREEN DRIVE (ENGINE SIDE)	1	H238867	1400153
14	ROTARY SCREEN DRIVE (SCREEN SIDE)	1	H221273	0200365
15	VACUUM FAN DRIVE (9.0L UPPER)	1	HXE24085	0200093
15	VACUUM FAN DRIVE (9.0L LOWER)	1	HXE24086	0200080
18	CLEAN GRAIN ELEVATOR	1	H218645	1402501
19	TAILINGS ELEVATOR	1	H154731	0402159
20	POWERSHAFT TO ELEVATOR JACK SHAFT	1	H154723	0902289
21	POWERSHAFT TO FEED ACCELERATOR JACK SHAFT	2	AH150678	1402217
22	FEED ACCELERATOR-STANDARD SPEED (HIGH-CAPACITY 440/800 RPM)	1	H236472	0257264
22	FEED ACCELERATOR (SLOW SPEED KIT 320/790 RPM)	1	H221732	0227204
22	FEED ACCELERATOR 3R5V-(HIGH SPEED HIGH CAPACITY 520/1000 RPM)	1	H230230	0257274
23	SHOE/CONVEYOR AUGER/FAN JACK SHAFT	1	H175587	0202517
24	CLEANING FAN (STANDARD SPEED)	1	HXE15594	0210192
25	RIGHT HAND CHAIN DRIVE	1	AH232566	Chain

S670 (MODEL YEAR 12/13)

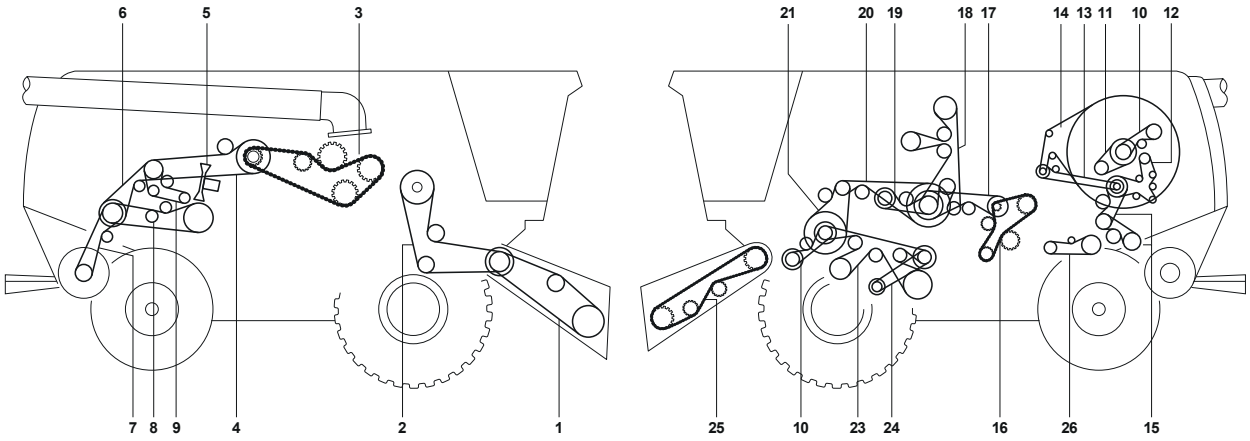

			OE	
1	VAR FEEDER HOUSE (HIGH TORQUE)	1	H220911	0217141
1	FIXED FEEDER HOUSE DRIVE (5 SPEED)	1	H229019	0144386
1	FIXED FEEDER HOUSE (HEAVY DUTY & HIGH TORQUE)	1	H174885	0227353
2	E-CLUTCH TO FEEDER HOUSE (HEAVY DUTY)	1	H156541	0227408
2	5 SPEED TO FEEDER HOUSE	1	H229018	0244438
3	UNLOADER-CHAIN (150% UNLOAD RATE)	1	AH202176	Chain
4	UNLOADER-BELT	2	AH160080	0202235
5	ROTOR DRIVE (HEAVY DUTY-LARGE SHEAVE)–GATES	1	HXE63990	0251431
6	PTO TO STRAW CHOPPER JACK SHAFT (3HC) FC	1	H241230	0744331
6	PTO TO CHOPPER JACKSHAFT 4HC (9.0L XFC)	1	H241000	0244329
7	STRAW CHOPPER JACK SHAFT TO STRAW CHOPPER (2HC) FC	1	H241212	3027274
7	STRAW CHOPPER JACK SHAFT TO STRAW CHOPPER (3HC) XFC	1	H240974	0244307
7	STRAW CHOPPER JACK SHAFT TO STRAW CHOPPER (1HC) XFC	1	H240972	0202222
8	DISCHARGE BEATER	2	AH236689	0302326
11	ENGINE FAN BELT VARIABLE (9.0L)	1	HXE22617	0211130
12	ENGINE ALTERNATOR BELT (9.0L)	1	H238822	0285328
13	ROTARY SCREEN DRIVE (ENGINE SIDE)	1	H238867	1400153
14	ROTARY SCREEN DRIVE (SCREEN SIDE)	1	H221273	0200365
15	VACUUM FAN DRIVE (9.0L UPPER)	1	HXE24085	0200093
15	VACUUM FAN DRIVE (9.0L LOWER)	1	HXE24086	0200080
16	TAILINGS RETHRESHER CHAIN	1	AXE17053	Chain
18	CLEAN GRAIN ELEVATOR MOD HD	1	H223230	0203515
20	POWERSHAFT TO ELEVATOR JACK SHAFT	1	H154723	0902289
21	POWERSHAFT TO FEED ACCELERATOR JACK SHAFT	2	AH150678	1402217
22	FEED ACCELERATOR-STANDARD SPEED (HIGH-CAPACITY 440/800 RPM)	1	H236472	0257264
22	FEED ACCELERATOR (SLOW SPEED KIT 320/790 RPM)	1	H221732	0227204
22	FEED ACCELERATOR 3R5V-(HIGH SPEED HIGH CAPACITY 520/1000 RPM)	1	H230230	0257274
23	SHOE/CONVEYOR AUGER/FAN JACK SHAFT	1	H175587	0202517
24	CLEANING FAN (STANDARD SPEED)	1	HXE15594	0210192
25	RIGHT HAND CHAIN DRIVE	1	AH232566	Chain
26	OVERSHOT BEATER	1	H240895	0702225

S680 (MODEL YEAR 12/13)

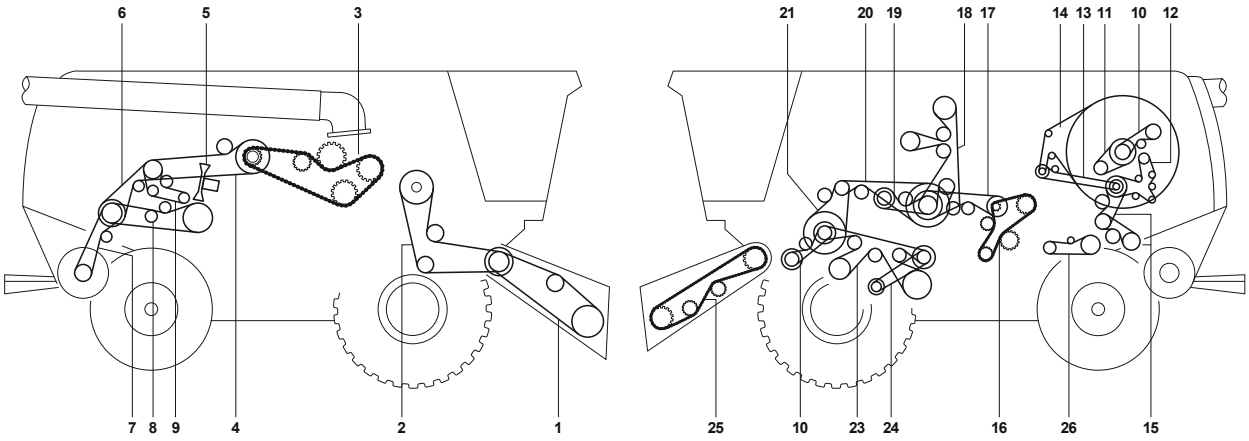

			OE	
1	FIXED FEEDER HOUSE DRIVE (5 SPEED)	1	H229019	0144386
1	FIXED FEEDER HOUSE (HEAVY DUTY & HIGH TORQUE)	1	H174885	0227353
2	E-CLUTCH TO FEEDER HOUSE (HEAVY DUTY)	1	H156541	0227408
2	5 SPEED TO FEEDER HOUSE	1	H229018	0244438
3	UNLOADER-CHAIN	1	AXE15956	Chain
4	UNLOADER-BELT HIGH CAPACITY	2	AH233198	2002237
5	ROTOR DRIVE (HEAVY DUTY-LARGE SHEAVE)--GATES	1	HXE63990	0251431
6	PTO TO STRAW CHOPPER JACK SHAFT (3HC) FC	1	H241230	0744331
6	PTO TO CHOPPER JACKSHAFT 4HC (13.5L XFC)	1	H240888	0240322
7	STRAW CHOPPER JACK SHAFT TO STRAW CHOPPER (2HC) FC	1	H241212	3027274
7	STRAW CHOPPER JACK SHAFT TO STRAW CHOPPER (3HC) XFC	1	H240974	0244307
7	STRAW CHOPPER JACK SHAFT TO STRAW CHOPPER (1HC) XFC	1	H240972	0202222
8	DISCHARGE BEATER	2	AH236689	0302326
11	ENGINE FAN BELT (13.5L)	1	HXE32548	0286295
12	ENGINE ALTERNATOR BELT (13.5L)	1	H238831	0285316
13	ROTARY SCREEN DRIVE (ENGINE SIDE)	1	H238867	1400153
14	ROTARY SCREEN DRIVE (SCREEN SIDE)	1	H221273	0200365
15	VACUUM FAN DRIVE (13.5L)	1	HXE38073	0200111
16	TAILINGS RETHRESHER CHAIN	1	AXE17053	Chain
17	TAILINGS RETHRESHER	1	H240895	0702225
18	CLEAN GRAIN ELEVATOR MOD HD	1	H223230	0203515
20	POWERSHAFT TO ELEVATOR JACK SHAFT	1	H154723	0902289
21	POWERSHAFT TO FEED ACCELERATOR JACK SHAFT	2	AH150678	1402217
22	FEED ACCELERATOR-STANDARD SPEED (HIGH-CAPACITY 440/800 RPM)	1	H236472	0257264
22	FEED ACCELERATOR (SLOW SPEED KIT 320/790 RPM)	1	H221732	0227204
22	FEED ACCELERATOR 3R5V-(HIGH SPEED HIGH CAPACITY 520/1000 RPM)	1	H230230	0257274
23	SHOE/CONVEYOR AUGER/FAN JACK SHAFT	1	H175587	0202517
24	CLEANING FAN (STANDARD SPEED)	1	HXE15594	0210192
25	RIGHT HAND CHAIN DRIVE	1	AH232566	Chain
26	OVERSHOT BEATER	1	H240895	0702225

S680 HILL MASTER (MODEL YEAR 12/13)

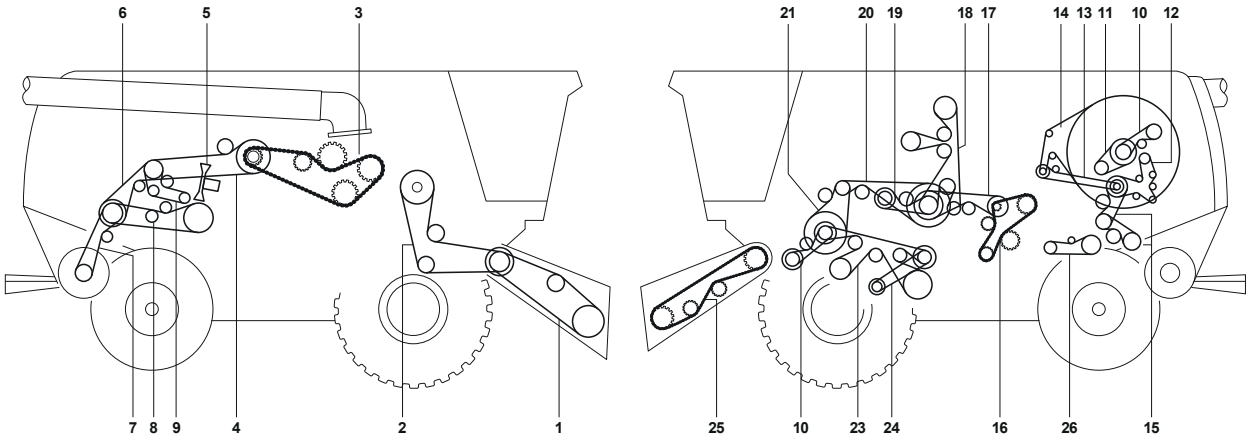

			OE	
1	FIXED FEEDER HOUSE DRIVE (5 SPEED)	1	H229019	0144386
1	FIXED FEEDER HOUSE (HEAVY DUTY & HIGH TORQUE)	1	H174885	0227353
2	E-CLUTCH TO FEEDER HOUSE (HEAVY DUTY)	1	H156541	0227408
2	5 SPEED TO FEEDER HOUSE	1	H229018	0244438
3	UNLOADER-CHAIN	1	AXE15956	Chain
4	UNLOADER-BELT HIGH CAPACITY	2	AH233198	2002237
5	ROTOR DRIVE (HEAVY DUTY-LARGE SHEAVE)--GATES	1	HXE63990	0251431
6	PTO TO STRAW CHOPPER JACK SHAFT (3HC) FC	1	H241230	0744331
6	PTO TO CHOPPER JACKSHAFT 4HC (13.5L XFC)	1	H240888	0240322
7	STRAW CHOPPER JACK SHAFT TO STRAW CHOPPER (2HC) FC	1	H241212	3027274
7	STRAW CHOPPER JACK SHAFT TO STRAW CHOPPER (3HC) XFC	1	H240974	0244307
7	STRAW CHOPPER JACK SHAFT TO STRAW CHOPPER (1HC) XFC	1	H240972	0202222
8	DISCHARGE BEATER	2	AH236689	0302326
11	ENGINE FAN BELT (13.5L)	1	HXE32548	0286295
12	ENGINE ALTERNATOR BELT (13.5L)	1	H238831	0285316
13	ROTARY SCREEN DRIVE (ENGINE SIDE)	1	H238867	1400153
14	ROTARY SCREEN DRIVE (SCREEN SIDE)	1	H221273	0200365
15	VACUUM FAN DRIVE (13.5L)	1	HXE38073	0200111
16	TAILINGS RETHRESHER CHAIN	1	AXE17053	Chain
17	TAILINGS RETHRESHER	1	H240895	0702225
18	CLEAN GRAIN ELEVATOR MOD HD	1	H223230	0203515
20	POWERSHAFT TO ELEVATOR JACK SHAFT	1	H154723	0902289
21	POWERSHAFT TO FEED ACCELERATOR JACK SHAFT	2	AH150678	1402217
22	FEED ACCELERATOR-STANDARD SPEED (HIGH-CAPACITY 440/800 RPM)	1	H236472	0257264
22	FEED ACCELERATOR (SLOW SPEED KIT 320/790 RPM)	1	H221732	0227204
22	FEED ACCELERATOR 3R5V-(HIGH SPEED HIGH CAPACITY 520/1000 RPM)	1	H230230	0257274
23	SHOE/CONVEYOR AUGER/FAN JACK SHAFT	1	H175587	0202517
24	CLEANING FAN (STANDARD SPEED)	1	HXE15594	0210192
25	RIGHT HAND CHAIN DRIVE	1	AH232566	Chain
26	OVERSHOT BEATER	1	H240895	0702225

S690 (MODEL YEAR 12/13)

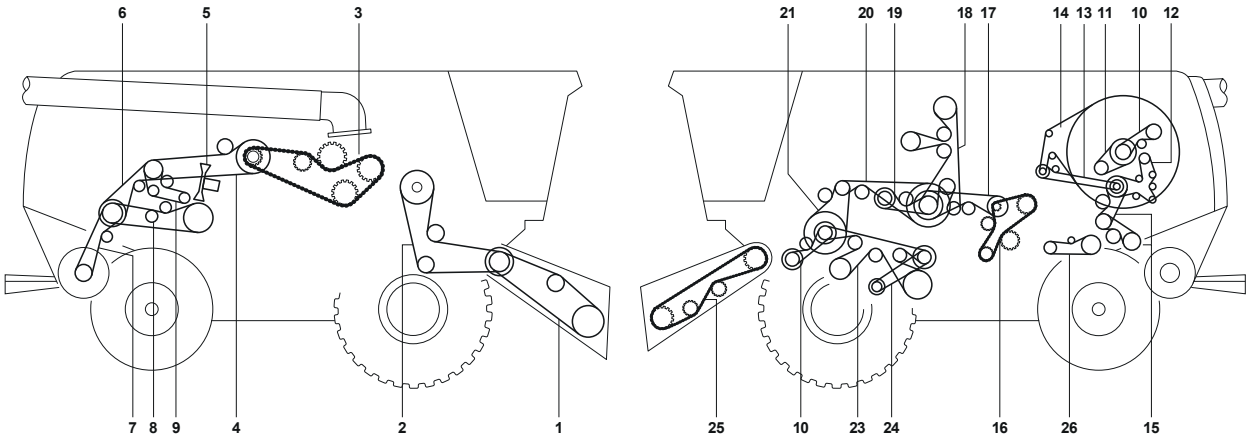

			OE	
1	FIXED FEEDER HOUSE DRIVE (5 SPEED)	1	H229019	0144386
1	FIXED FEEDER HOUSE (HEAVY DUTY & HIGH TORQUE)	1	H174885	0227353
2	E-CLUTCH TO FEEDER HOUSE (HEAVY DUTY)	1	H156541	0227408
2	5 SPEED TO FEEDER HOUSE	1	H229018	0244438
3	UNLOADER-CHAIN	1	AXE15956	Chain
4	UNLOADER-BELT HIGH CAPACITY	2	AH233198	2002237
5	ROTOR DRIVE (HEAVY DUTY-LARGE SHEAVE)--GATES	1	HXE63990	0251431
6	PTO TO STRAW CHOPPER JACK SHAFT (3HC) FC	1	H241230	0744331
6	PTO TO CHOPPER JACKSHAFT 4HC (13.5L XFC)	1	H240888	0240322
7	STRAW CHOPPER JACK SHAFT TO STRAW CHOPPER (2HC) FC	1	H241212	3027274
7	STRAW CHOPPER JACK SHAFT TO STRAW CHOPPER (3HC) XFC	1	H240974	0244307
7	STRAW CHOPPER JACK SHAFT TO STRAW CHOPPER (1HC) XFC	1	H240972	0202222
8	DISCHARGE BEATER	2	AH236689	0302326
11	ENGINE FAN BELT (13.5L)	1	HXE32548	0286295
12	ENGINE ALTERNATOR BELT (13.5L)	1	H238831	0285316
13	ROTARY SCREEN DRIVE (ENGINE SIDE)	1	H238867	1400153
14	ROTARY SCREEN DRIVE (SCREEN SIDE)	1	H221273	0200365
15	VACUUM FAN DRIVE (13.5L)	1	HXE38073	0200111
16	TAILINGS RETHRESHER CHAIN	1	AXE17053	Chain
17	TAILINGS RETHRESHER	1	H240895	0702225
18	CLEAN GRAIN ELEVATOR MOD HD	1	H223230	0203515
18	CLEAN GRAIN ELEVATOR 2HB	1	HXE20763	0223557
20	POWERSHAFT TO ELEVATOR JACK SHAFT	1	H154723	0902289
21	POWERSHAFT TO FEED ACCELERATOR JACK SHAFT	2	AH150678	1402217
22	FEED ACCELERATOR-STANDARD SPEED (HIGH-CAPACITY 440/800 RPM)	1	H236472	0257264
22	FEED ACCELERATOR (SLOW SPEED KIT 320/790 RPM)	1	H221732	0227204
22	FEED ACCELERATOR 3R5V-(HIGH SPEED HIGH CAPACITY 520/1000 RPM)	1	H230230	0257274
23	SHOE/CONVEYOR AUGER/FAN JACK SHAFT	1	H175587	0202517
24	CLEANING FAN (STANDARD SPEED)	1	HXE15594	0210192
25	RIGHT HAND CHAIN DRIVE	1	AH232566	Chain
26	OVERSHOT BEATER	1	H240895	0702225

S690 HILL MASTER (MODEL YEAR 12/13)

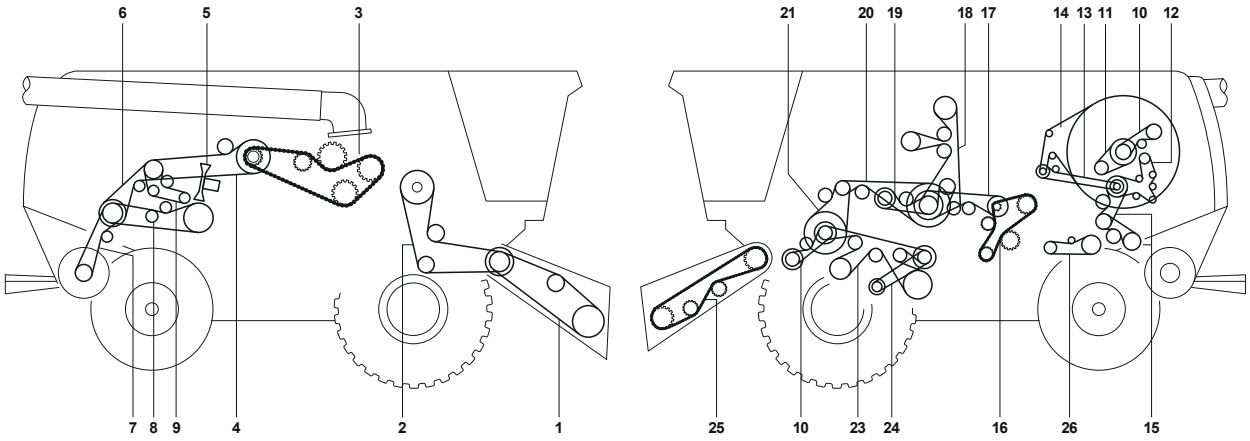

			OE	
1	FIXED FEEDER HOUSE DRIVE (5 SPEED)	1	H229019	0144386
1	FIXED FEEDER HOUSE (HEAVY DUTY & HIGH TORQUE)	1	H174885	0227353
2	E-CLUTCH TO FEEDER HOUSE (HEAVY DUTY)	1	H156541	0227408
2	5 SPEED TO FEEDER HOUSE	1	H229018	0244438
3	UNLOADER-CHAIN	1	AXE15956	Chain
4	UNLOADER-BELT HIGH CAPACITY	2	AH233198	2002237
5	ROTOR DRIVE (HEAVY DUTY-LARGE SHEAVE)--GATES	1	HXE63990	0251431
6	PTO TO STRAW CHOPPER JACK SHAFT (3HC) FC	1	H241230	0744331
6	PTO TO CHOPPER JACKSHAFT 4HC (13.5L XFC)	1	H240888	0240322
7	STRAW CHOPPER JACK SHAFT TO STRAW CHOPPER (2HC) FC	1	H241212	3027274
7	STRAW CHOPPER JACK SHAFT TO STRAW CHOPPER (3HC) XFC	1	H240974	0244307
7	STRAW CHOPPER JACK SHAFT TO STRAW CHOPPER (1HC) XFC	1	H240972	0202222
8	DISCHARGE BEATER	2	AH236689	0302326
11	ENGINE FAN BELT (13.5L)	1	HXE32548	0286295
12	ENGINE ALTERNATOR BELT (13.5L)	1	H238831	0285316
13	ROTARY SCREEN DRIVE (ENGINE SIDE)	1	H238867	1400153
14	ROTARY SCREEN DRIVE (SCREEN SIDE)	1	H221273	0200365
15	VACUUM FAN DRIVE (13.5L)	1	HXE38073	0200111
16	TAILINGS RETHRESHER CHAIN	1	AXE17053	Chain
17	TAILINGS RETHRESHER	1	H240895	0702225
18	CLEAN GRAIN ELEVATOR MOD HD	1	H223230	0203515
20	POWERSHAFT TO ELEVATOR JACK SHAFT	1	H154723	0902289
21	POWERSHAFT TO FEED ACCELERATOR JACK SHAFT	2	AH150678	1402217
22	FEED ACCELERATOR-STANDARD SPEED (HIGH-CAPACITY 440/800 RPM)	1	H236472	0257264
22	FEED ACCELERATOR (SLOW SPEED KIT 320/790 RPM)	1	H221732	0227204
22	FEED ACCELERATOR 3R5V-(HIGH SPEED HIGH CAPACITY 520/1000 RPM)	1	H230230	0257274
23	SHOE/CONVEYOR AUGER/FAN JACK SHAFT	1	H175587	0202517
24	CLEANING FAN (STANDARD SPEED)	1	HXE15594	0210192
25	RIGHT HAND CHAIN DRIVE	1	AH232566	Chain
26	OVERSHOT BEATER	1	H240895	0702225

S660 (MODEL YEAR 14)

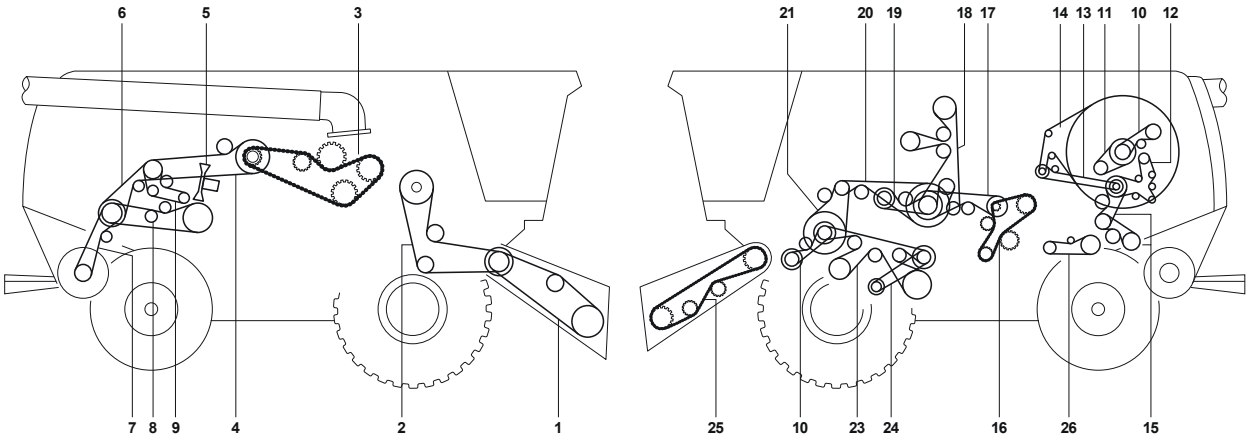

			OE	
1	VAR FEEDER HOUSE (HIGH TORQUE)	1	HXE45928	0217141
1	VAR FEEDER HOUSE (HEAVY DUTY)	1	H218726	0212325
1	FIXED FEEDER HOUSE (HEAVY DUTY & HIGH TORQUE)	1	H174885	0227353
2	E-CLUTCH TO FEEDER HOUSE (HEAVY DUTY)	1	H156541	0227408
2	E-CLUTCH TO FEEDER HOUSE (STANDARD DUTY)	1	H156796	0203363
3	UNLOADER-CHAIN (150% UNLOAD RATE)	1	AH202176	Chain
4	UNLOADER-BELT	2	AH160080	0202235
5	ROTOR DRIVE (STANDARD DUTY)–GATES	1	H221498	0251498
5	ROTOR DRIVE (STANDARD DUTY)–CARLISLE	1	HXE46027	0251449
6	PTO TO STRAW CHOPPER JACK SHAFT (3HC) FC	1	H241230	0744331
6	PTO TO CHOPPER JACKSHAFT 4HC (13.5L XFC)	1	H240888	0240322
7	STRAW CHOPPER JACK SHAFT TO STRAW CHOPPER (2HC) FC	1	H241212	3027274
7	STRAW CHOPPER JACK SHAFT TO STRAW CHOPPER (3HC) XFC	1	H240974	0244307
7	STRAW CHOPPER JACK SHAFT TO STRAW CHOPPER (1HC) XFC	1	H240972	0202222
8	DISCHARGE BEATER (HC)	1	HXE15556	0302326
9	ATB (AFTERTREATMENT BLOWER DRIVE - 9L)	1	HXE69280	0284297
11	ENGINE FAN BELT VARIABLE (9.0L)	1	HXE22617	0211130
12	ENGINE ALTERNATOR BELT (9.0L)	1	H238822	0285328
13	ROTARY SCREEN DRIVE (ENGINE SIDE)	1	H238867	1400153
14	ROTARY SCREEN DRIVE (SCREEN SIDE)	1	H221273	0200365
15	VACUUM FAN DRIVE (9.0L UPPER)	1	HXE24085	0200093
15	VACUUM FAN DRIVE (9.0L LOWER)	1	HXE24086	0200080
18	CLEAN GRAIN ELEVATOR	1	H218645	1402501
19	TAILINGS ELEVATOR	1	H154731	0402159
20	POWERSHAFT TO ELEVATOR JACK SHAFT	1	H154723	0902289
21	POWERSHAFT TO FEED ACCELERATOR JACK SHAFT	2	AH150678	1402217
22	FEED ACCELERATOR-STANDARD SPEED (HIGH-CAPACITY 440/800 RPM)	1	H236472	0257264
22	FEED ACCELERATOR (SLOW SPEED KIT 320/790 RPM)	1	H221732	0227204
22	FEED ACCELERATOR (HIGH SPEED - HIGH CAPACITY)	1	HXE54503	0257274
23	SHOE/CONVEYOR AUGER/FAN JACK SHAFT	1	H175587	0202517
24	CLEANING FAN (STANDARD SPEED)	1	HXE15594	0210192
25	RIGHT HAND CHAIN DRIVE	1	AH232566	Chain

S670 (MODEL YEAR 14)

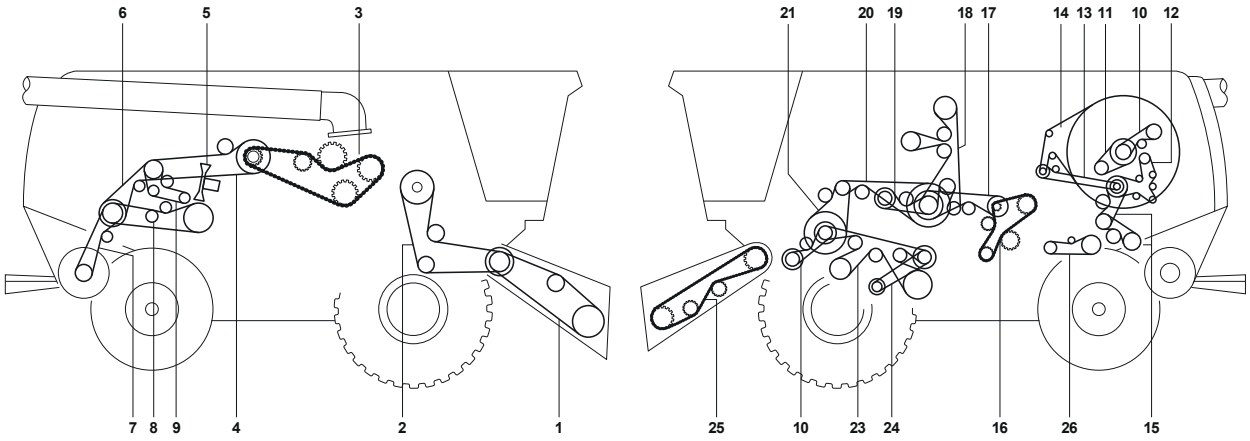

			OE	
1	VAR FEEDER HOUSE (HIGH TORQUE)	1	H220911	0217141
1	VAR FEEDER HOUSE (HIGH TORQUE)	1	HXE45928	0217141
1	FIXED FEEDER HOUSE DRIVE (5 SPEED)	1	H229019	0144386
1	FIXED FEEDER HOUSE (HEAVY DUTY & HIGH TORQUE)	1	H174885	0227353
2	E-CLUTCH TO FEEDER HOUSE (HEAVY DUTY)	1	H156541	0227408
2	5 SPEED TO FEEDER HOUSE	1	H229018	0244438
3	UNLOADER-CHAIN (150% UNLOAD RATE)	1	AH202176	Chain
4	UNLOADER-BELT	2	AH160080	0202235
5	ROTOR DRIVE (STANDARD DUTY)--CARLISLE	1	HXE46027	0251449
5	ROTOR DRIVE (HEAVY DUTY-LARGE SHEAVE)--GATES	1	HXE63990	0251431
6	PTO TO STRAW CHOPPER JACK SHAFT (3HC) FC	1	H241230	0744331
6	PTO TO CHOPPER JACKSHAFT 4HC (13.5L XFC)	1	H240888	0240322
7	STRAW CHOPPER JACK SHAFT TO STRAW CHOPPER (2HC) FC	1	H241212	3027274
7	STRAW CHOPPER JACK SHAFT TO STRAW CHOPPER (3HC) XFC	1	H240974	0244307
7	STRAW CHOPPER JACK SHAFT TO STRAW CHOPPER (1HC) XFC	1	H240972	0202222
8	DISCHARGE BEATER	2	AH236689	0302326
9	ATB (AFTERTREATMENT BLOWER DRIVE - 9L)	1	HXE69280	0284297
11	ENGINE FAN BELT VARIABLE (9.0L)	1	HXE22617	0211130
12	ENGINE ALTERNATOR BELT (9.0L)	1	H238822	0285328
13	ROTARY SCREEN DRIVE (ENGINE SIDE)	1	H238867	1400153
14	ROTARY SCREEN DRIVE (SCREEN SIDE)	1	H221273	0200365
15	VACUUM FAN DRIVE (9.0L UPPER)	1	HXE24085	0200093
15	VACUUM FAN DRIVE (9.0L LOWER)	1	HXE24086	0200080
16	TAILINGS RETHRESHER CHAIN	1	AXE17053	Chain
17	TAILINGS RETHRESHER	1	H240895	0702225
18	CLEAN GRAIN ELEVATOR	1	H218645	1402501
18	CLEAN GRAIN ELEVATOR MOD HD	1	H223230	0203515
20	POWERSHAFT TO ELEVATOR JACK SHAFT	1	H154723	0902289
21	POWERSHAFT TO FEED ACCELERATOR JACK SHAFT	2	AH150678	1402217
22	FEED ACCELERATOR-STANDARD SPEED (HIGH-CAPACITY 440/800 RPM)	1	H236472	0257264
22	FEED ACCELERATOR (SLOW SPEED KIT 320/790 RPM)	1	H221732	0227204
22	FEED ACCELERATOR 3R5V-(HIGH SPEED HIGH CAPACITY 520/1000 RPM)	1	H230230	0257274
22	FEED ACCELERATOR (HIGH SPEED - HIGH CAPACITY)	1	HXE54503	0257274
23	SHOE/CONVEYOR AUGER/FAN JACK SHAFT	1	H175587	0202517
24	CLEANING FAN (STANDARD SPEED)	1	HXE15594	0210192
25	RIGHT HAND CHAIN DRIVE	1	AH232566	Chain
26	OVERSHOT BEATER	1	H240895	0702225

S680 (MODEL YEAR 14)

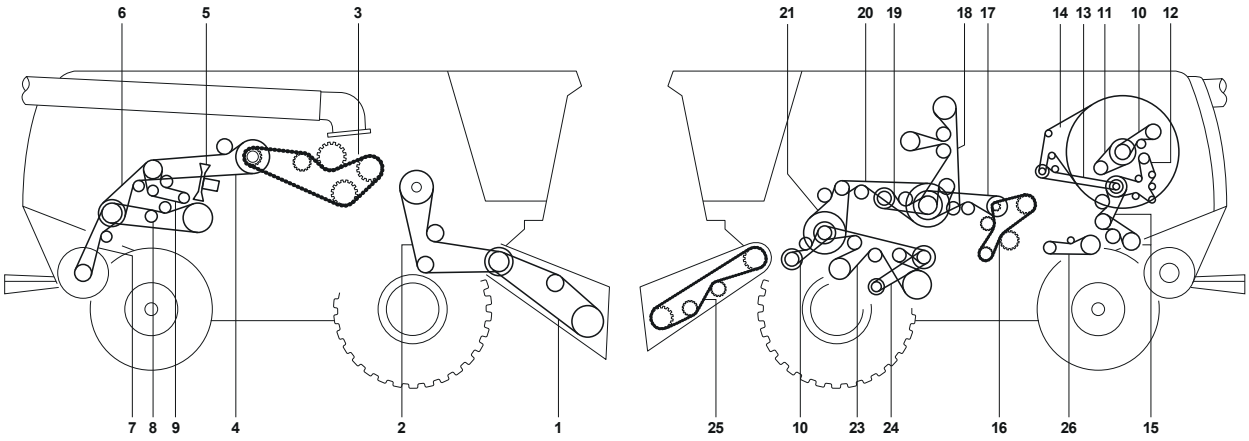

			OE	
1	VAR FEEDER HOUSE (HIGH TORQUE)	1	H220911	0217141
1	FIXED FEEDER HOUSE DRIVE (5 SPEED)	1	H229019	0144386
1	FIXED FEEDER HOUSE (HEAVY DUTY & HIGH TORQUE)	1	H174885	0227353
2	E-CLUTCH TO FEEDER HOUSE (HEAVY DUTY)	1	H156541	0227408
2	5 SPEED TO FEEDER HOUSE	1	H229018	0244438
3	UNLOADER-CHAIN	1	AXE15956	Chain
4	UNLOADER-BELT HIGH CAPACITY	2	AH233198	2002237
5	ROTOR DRIVE (HEAVY DUTY-LARGE SHEAVE)--GATES	1	HXE63990	0251431
6	PTO TO STRAW CHOPPER JACK SHAFT (3HC) FC	1	H241230	0744331
6	PTO TO CHOPPER JACKSHAFT 4HC (13.5L XFC)	1	H240888	0240322
7	STRAW CHOPPER JACK SHAFT TO STRAW CHOPPER (2HC) FC	1	H241212	3027274
7	STRAW CHOPPER JACK SHAFT TO STRAW CHOPPER (3HC) XFC	1	H240974	0244307
7	STRAW CHOPPER JACK SHAFT TO STRAW CHOPPER (1HC) XFC	1	H240972	0202222
8	DISCHARGE BEATER	2	AH236689	0302326
9	ATB (AFTERTREATMENT BLOWER DRIVE -13.5L)	1	HXE69281	0284298
11	ENGINE FAN BELT (13.5L)	1	HXE32548	0286295
12	ENGINE ALTERNATOR BELT (13.5L)	1	H238831	0285316
13	ROTARY SCREEN DRIVE (ENGINE SIDE)	1	H238867	1400153
14	ROTARY SCREEN DRIVE (SCREEN SIDE)	1	H221273	0200365
15	VACUUM FAN DRIVE (13.5L)	1	HXE38073	0200111
16	TAILINGS RETHRESHER CHAIN	1	AXE17053	Chain
17	TAILINGS RETHRESHER	1	H240895	0702225
18	CLEAN GRAIN ELEVATOR MOD HD	1	H223230	0203515
20	POWERSHAFT TO ELEVATOR JACK SHAFT	1	H154723	0902289
21	POWERSHAFT TO FEED ACCELERATOR JACK SHAFT	2	AH150678	1402217
22	FEED ACCELERATOR-STANDARD SPEED (HIGH-CAPACITY 440/800 RPM)	1	H236472	0257264
22	FEED ACCELERATOR (SLOW SPEED KIT 320/790 RPM)	1	H221732	0227204
22	FEED ACCELERATOR 3R5V-(HIGH SPEED HIGH CAPACITY 520/1000 RPM)	1	H230230	0257274
22	FEED ACCELERATOR (HIGH SPEED - HIGH CAPACITY)	1	HXE54503	0257274
23	SHOE/CONVEYOR AUGER/FAN JACK SHAFT	1	H175587	0202517
24	CLEANING FAN (STANDARD SPEED)	1	HXE15594	0210192
25	RIGHT HAND CHAIN DRIVE	1	AH232566	Chain
26	OVERSHOT BEATER	1	H240895	0702225

S690 (MODEL YEAR 14)

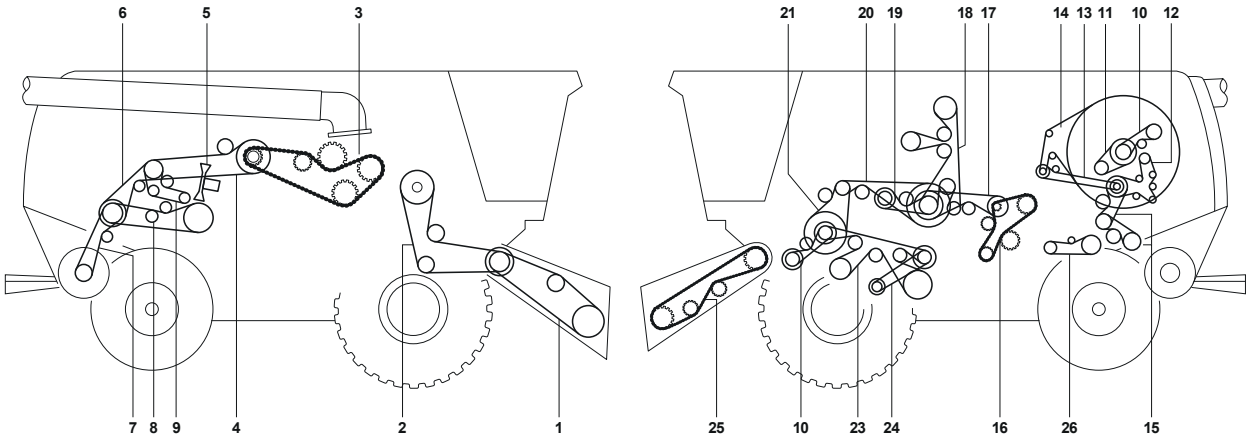

			OE	
1	FIXED FEEDER HOUSE DRIVE (5 SPEED)	1	H229019	0144386
1	FIXED FEEDER HOUSE (HEAVY DUTY & HIGH TORQUE)	1	H174885	0227353
2	E-CLUTCH TO FEEDER HOUSE (HEAVY DUTY)	1	H156541	0227408
2	5 SPEED TO FEEDER HOUSE	1	H229018	0244438
3	UNLOADER-CHAIN	1	AXE15956	Chain
4	UNLOADER-BELT HIGH CAPACITY	2	AH233198	2002237
5	ROTOR DRIVE (HEAVY DUTY-LARGE SHEAVE)--GATES	1	HXE63990	0251431
6	PTO TO STRAW CHOPPER JACK SHAFT (3HC) FC	1	H241230	0744331
6	PTO TO CHOPPER JACKSHAFT 4HC (13.5L XFC)	1	H240888	0240322
7	STRAW CHOPPER JACK SHAFT TO STRAW CHOPPER (2HC) FC	1	H241212	3027274
7	STRAW CHOPPER JACK SHAFT TO STRAW CHOPPER (3HC) XFC	1	H240974	0244307
7	STRAW CHOPPER JACK SHAFT TO STRAW CHOPPER (1HC) XFC	1	H240972	0202222
8	DISCHARGE BEATER	2	AH236689	0302326
9	ATB (AFTERTREATMENT BLOWER DRIVE -13.5L)	1	HXE69281	0284298
11	ENGINE FAN BELT (13.5L)	1	HXE32548	0286295
12	ENGINE ALTERNATOR BELT (13.5L)	1	H238831	0285316
13	ROTARY SCREEN DRIVE (ENGINE SIDE)	1	H238867	1400153
14	ROTARY SCREEN DRIVE (SCREEN SIDE)	1	H221273	0200365
15	VACUUM FAN DRIVE (13.5L)	1	HXE38073	0200111
16	TAILINGS RETHRESHER CHAIN	1	AXE17053	Chain
17	TAILINGS RETHRESHER	1	H240895	0702225
18	CLEAN GRAIN ELEVATOR MOD HD	1	H223230	0203515
18	CLEAN GRAIN ELEVATOR 2HB	1	HXE20763	0223557
20	POWERSHAFT TO ELEVATOR JACK SHAFT	1	H154723	0902289
21	POWERSHAFT TO FEED ACCELERATOR JACK SHAFT	2	AH150678	1402217
22	FEED ACCELERATOR-STANDARD SPEED (HIGH-CAPACITY 440/800 RPM)	1	H236472	0257264
22	FEED ACCELERATOR (SLOW SPEED KIT 320/790 RPM)	1	H221732	0227204
22	FEED ACCELERATOR 3R5V-(HIGH SPEED HIGH CAPACITY 520/1000 RPM)	1	H230230	0257274
22	FEED ACCELERATOR (HIGH SPEED - HIGH CAPACITY)	1	HXE54503	0257274
23	SHOE/CONVEYOR AUGER/FAN JACK SHAFT	1	H175587	0202517
24	CLEANING FAN (STANDARD SPEED)	1	HXE15594	0210192
25	RIGHT HAND CHAIN DRIVE	1	AH232566	Chain
26	OVERSHOT BEATER	1	H240895	0702225

S690 HILL MASTER (MODEL YEAR 14)

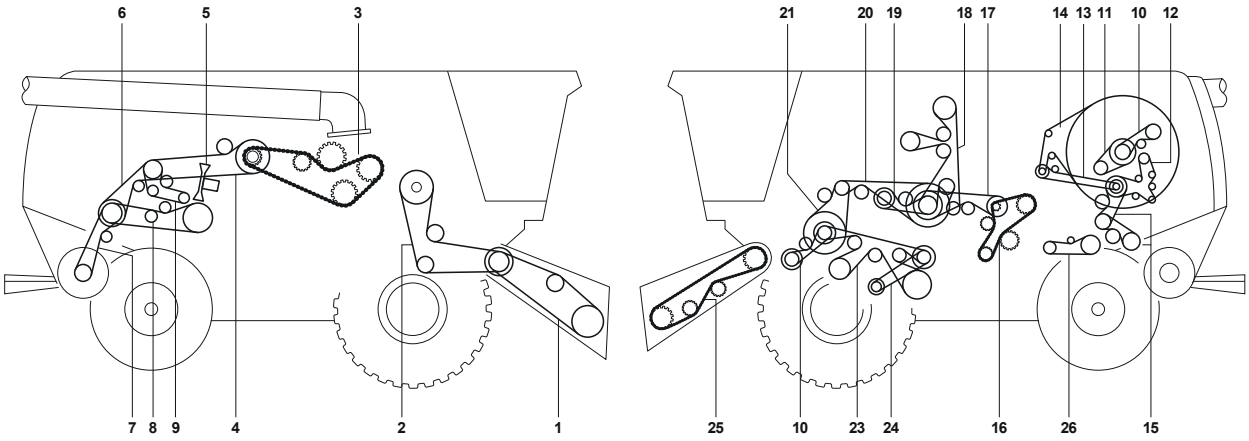

			OE	
1	FIXED FEEDER HOUSE DRIVE (5 SPEED)	1	H229019	0144386
1	FIXED FEEDER HOUSE (HEAVY DUTY & HIGH TORQUE)	1	H174885	0227353
2	E-CLUTCH TO FEEDER HOUSE (HEAVY DUTY)	1	H156541	0227408
2	5 SPEED TO FEEDER HOUSE	1	H229018	0244438
3	UNLOADER-CHAIN	1	AXE15956	Chain
4	UNLOADER-BELT HIGH CAPACITY	2	AH233198	2002237
5	ROTOR DRIVE (HEAVY DUTY-LARGE SHEAVE)--GATES	1	HXE63990	0251431
6	PTO TO STRAW CHOPPER JACK SHAFT (3HC) FC	1	H241230	0744331
6	PTO TO CHOPPER JACKSHAFT 4HC (13.5L XFC)	1	H240888	0240322
7	STRAW CHOPPER JACK SHAFT TO STRAW CHOPPER (2HC) FC	1	H241212	3027274
7	STRAW CHOPPER JACK SHAFT TO STRAW CHOPPER (3HC) XFC	1	H240974	0244307
7	STRAW CHOPPER JACK SHAFT TO STRAW CHOPPER (1HC) XFC	1	H240972	0202222
8	DISCHARGE BEATER	2	AH236689	0302326
9	ATB (AFTERTREATMENT BLOWER DRIVE -13.5L)	1	HXE69281	0284298
11	ENGINE FAN BELT (13.5L)	1	HXE32548	0286295
12	ENGINE ALTERNATOR BELT (13.5L)	1	H238831	0285316
13	ROTARY SCREEN DRIVE (ENGINE SIDE)	1	H238867	1400153
14	ROTARY SCREEN DRIVE (SCREEN SIDE)	1	H221273	0200365
15	VACUUM FAN DRIVE (13.5L)	1	HXE38073	0200111
16	TAILINGS RETHRESHER CHAIN	1	AXE17053	Chain
17	TAILINGS RETHRESHER	1	H240895	0702225
18	CLEAN GRAIN ELEVATOR MOD HD	1	H223230	0203515
18	CLEAN GRAIN ELEVATOR 2HB	1	HXE20763	0223557
20	POWERSHAFT TO ELEVATOR JACK SHAFT	1	H154723	0902289
21	POWERSHAFT TO FEED ACCELERATOR JACK SHAFT	2	AH150678	1402217
22	FEED ACCELERATOR-STANDARD SPEED (HIGH-CAPACITY 440/800 RPM)	1	H236472	0257264
22	FEED ACCELERATOR (SLOW SPEED KIT 320/790 RPM)	1	H221732	0227204
22	FEED ACCELERATOR 3R5V-(HIGH SPEED HIGH CAPACITY 520/1000 RPM)	1	H230230	0257274
22	FEED ACCELERATOR (HIGH SPEED - HIGH CAPACITY)	1	HXE54503	0257274
23	SHOE/CONVEYOR AUGER/FAN JACK SHAFT	1	H175587	0202517
24	CLEANING FAN (STANDARD SPEED)	1	HXE15594	0210192
25	RIGHT HAND CHAIN DRIVE	1	AH232566	Chain
26	OVERSHOT BEATER	1	H240895	0702225

S660 (MODEL YEAR 15)

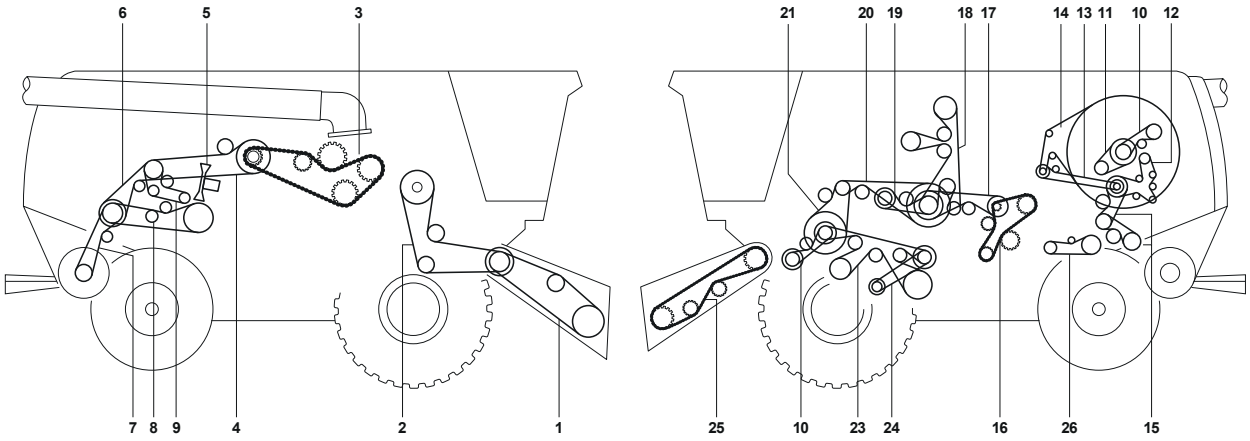

			OE	
1	VAR FEEDER HOUSE (HIGH TORQUE)	1	HXE45928	0217141
1	VAR FEEDER HOUSE (HIGH TORQUE - FORE AFT)	1	HXE50399	0213316
1	VAR FEEDER HOUSE (HEAVY DUTY)	1	H218726	0212325
1	FIXED FEEDER HOUSE (HEAVY DUTY & HIGH TORQUE)	1	H174885	0227353
1	FIXED FEEDER HOUSE (HEAVY DUTY & HIGH TORQUE - FORE AFT)	1	HXE50398	0227342
2	E-CLUTCH TO FEEDER HOUSE (HEAVY DUTY)	1	HXE95935	0227406
3	UNLOADER-CHAIN (150% UNLOAD RATE)	1	AH202176	Chain
4	UNLOADER-BELT	2	AH160080	0202235
5	ROTOR DRIVE (STANDARD DUTY)–CARLISLE	1	HXE46027	0251449
6	PTO TO STRAW CHOPPER JACK SHAFT (3HC) FC	1	H241230	0744331
7	STRAW CHOPPER JACK SHAFT TO STRAW CHOPPER (2HC) FC	1	H241212	3027274
8	DISCHARGE BEATER (HC)	1	HXE15556	0302326
8	DISCHARGE BEATER (2HC - BANDED BELT)	1	HXE69321	0327375
9	ATB (AFTERTREATMENT BLOWER DRIVE - 9L)	1	HXE69280	0284297
11	ENGINE FAN BELT VARIABLE (9.0L)	1	HXE22617	0211130
12	ENGINE ALTERNATOR BELT (9.0L)	1	H238822	0285328
13	ROTARY SCREEN DRIVE (ENGINE SIDE)	1	H238867	1400153
14	ROTARY SCREEN DRIVE (SCREEN SIDE)	1	H221273	0200365
15	VACUUM FAN DRIVE (9.0L UPPER)	1	HXE68015	0200093
15	VACUUM FAN DRIVE (9.0L LOWER)	1	HXE68016	0200082
18	CLEAN GRAIN ELEVATOR	1	H218645	1402501
19	TAILINGS ELEVATOR	1	H154731	0402159
20	POWERSHAFT TO ELEVATOR JACK SHAFT	1	H154723	0902289
21	POWERSHAFT TO FEED ACCELERATOR JACK SHAFT	2	AH150678	1402217
22	FEED ACCELERATOR (SLOW SPEED KIT 320/790 RPM)	1	H221732	0227204
22	FEED ACCELERATOR (HIGH SPEED - HIGH CAPACITY)	1	HXE54503	0257274
22	FEED ACCELERATOR (STANDARD SPEED)	1	HXE95511	0257264
23	SHOE DRIVE (GATES)	1	HXE82335	0202517
24	CLEANING FAN (STANDARD SPEED)	1	HXE15594	0210192
25	RIGHT HAND CHAIN DRIVE	1	AH232566	Chain
25	RIGHT HAND CHAIN DRIVE	1	AXE28813	Chain

S670 (MODEL YEAR 15)

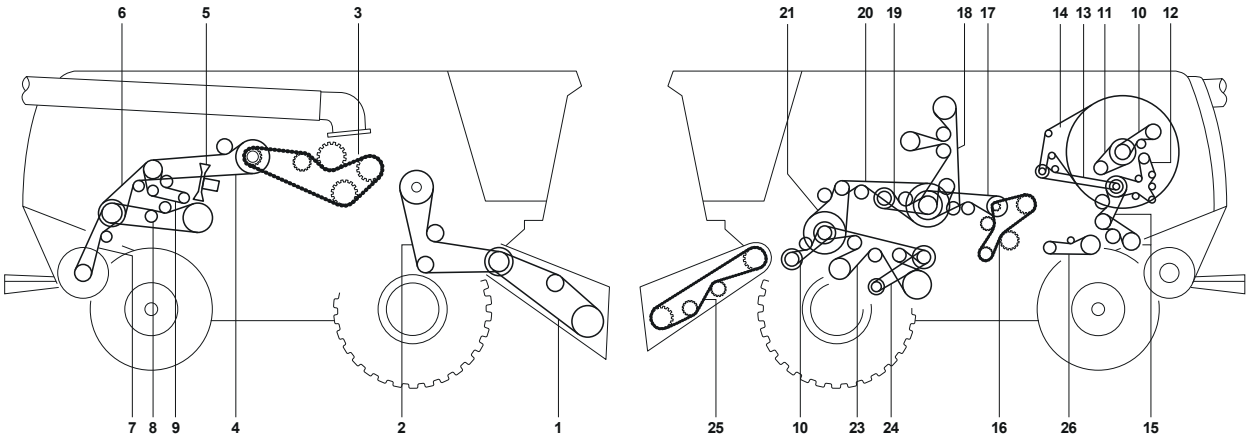

			OE	
1	VAR FEEDER HOUSE (HIGH TORQUE)	1	HXE45928	0217141
1	VAR FEEDER HOUSE (HIGH TORQUE - FORE AFT)	1	HXE50399	0213316
1	FIXED FEEDER HOUSE DRIVE (5 SPEED)	1	H229019	0144386
1	FIXED FEEDER HOUSE DRIVE (5 SPEED - FORE AFT)	1	HXE47152	0244374
1	FIXED FEEDER HOUSE (HEAVY DUTY & HIGH TORQUE)	1	H174885	0227353
1	FIXED FEEDER HOUSE (HEAVY DUTY & HIGH TORQUE - FORE AFT)	1	HXE50398	0227342
2	5 SPEED TO FEEDER HOUSE	1	H229018	0244438
2	E-CLUTCH TO FEEDER HOUSE (HEAVY DUTY)	1	HXE95935	0227406
3	UNLOADER-CHAIN (150% UNLOAD RATE)	1	AH202176	Chain
4	UNLOADER-BELT	2	AH160080	0202235
5	ROTOR DRIVE (STANDARD DUTY)–CARLISLE	1	HXE46027	0251449
6	PTO TO STRAW CHOPPER JACK SHAFT (3HC) FC	1	H241230	0744331
7	STRAW CHOPPER JACK SHAFT TO STRAW CHOPPER (2HC) FC	1	H241212	3027274
8	DISCHARGE BEATER (2HC - BANDED BELT)	1	HXE69321	0327375
9	ATB (AFTERTREATMENT BLOWER DRIVE - 9L)	1	HXE69280	0284297
11	ENGINE FAN BELT VARIABLE (9.0L)	1	HXE22617	0211130
12	ENGINE ALTERNATOR BELT (9.0L)	1	H238822	0285328
13	ROTARY SCREEN DRIVE (ENGINE SIDE)	1	H238867	1400153
14	ROTARY SCREEN DRIVE (SCREEN SIDE)	1	H221273	0200365
15	VACUUM FAN DRIVE (9.0L UPPER)	1	HXE68015	0200093
15	VACUUM FAN DRIVE (9.0L LOWER)	1	HXE68016	0200082
18	CLEAN GRAIN ELEVATOR MOD HD	1	H223230	0203515
19	TAILINGS ELEVATOR	1	H154731	0402159
20	POWERSHAFT TO ELEVATOR JACK SHAFT	1	H154723	0902289
21	POWERSHAFT TO FEED ACCELERATOR JACK SHAFT	2	AH150678	1402217
22	FEED ACCELERATOR (SLOW SPEED KIT 320/790 RPM)	1	H221732	0227204
22	FEED ACCELERATOR (HIGH SPEED - HIGH CAPACITY)	1	HXE54503	0257274
22	FEED ACCELERATOR (STANDARD SPEED)	1	HXE95511	0257264
23	SHOE DRIVE (GATES)	1	HXE82335	0202517
24	CLEANING FAN (STANDARD SPEED)	1	HXE15594	0210192
25	RIGHT HAND CHAIN DRIVE	1	AH232566	Chain
25	RIGHT HAND CHAIN DRIVE	1	AXE28813	Chain
26	OVERSHOT BEATER	1	H240895	0702225

S680 (MODEL YEAR 15)

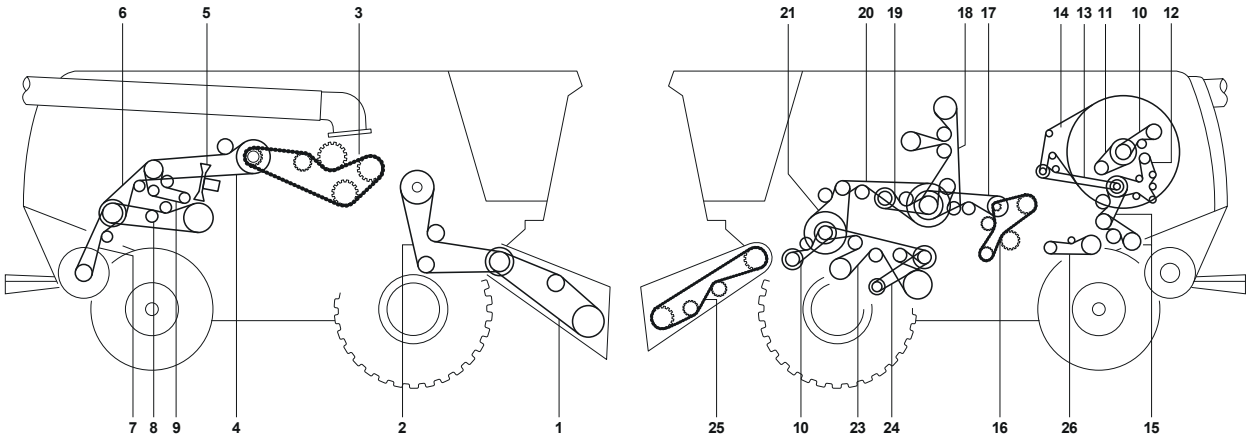

			OE	
1	FIXED FEEDER HOUSE DRIVE (5 SPEED)	1	H229019	0144386
1	FIXED FEEDER HOUSE DRIVE (5 SPEED - FORE AFT)	1	HXE47152	0244374
1	FIXED FEEDER HOUSE (HEAVY DUTY & HIGH TORQUE)	1	H174885	0227353
1	FIXED FEEDER HOUSE (HEAVY DUTY & HIGH TORQUE - FORE AFT)	1	HXE50398	0227342
2	5 SPEED TO FEEDER HOUSE	1	H229018	0244438
2	E-CLUTCH TO FEEDER HOUSE (HEAVY DUTY)	1	HXE95935	0227406
3	UNLOADER-CHAIN	1	AXE15956	Chain
4	UNLOADER-BELT HIGH CAPACITY	2	AH233198	2002237
5	ROTOR DRIVE (HEAVY DUTY-LARGE SHEAVE)--GATES	1	HXE63990	0251431
6	PTO TO STRAW CHOPPER JACK SHAFT (3HC) FC	1	H241230	0744331
7	STRAW CHOPPER JACK SHAFT TO STRAW CHOPPER (2HC) FC	1	H241212	3027274
8	DISCHARGE BEATER (2HC - BANDED BELT)	1	HXE69321	0327375
9	ATB (AFTERTREATMENT BLOWER DRIVE -13.5L)	1	HXE69281	0284298
11	ENGINE FAN BELT (13.5L)	1	HXE32548	0286295
12	ENGINE ALTERNATOR BELT (13.5L)	1	H238831	0285316
13	ROTARY SCREEN DRIVE (ENGINE SIDE)	1	H238867	1400153
14	ROTARY SCREEN DRIVE (SCREEN SIDE)	1	H221273	0200365
15	VACUUM FAN DRIVE (13.5L)	1	HXE38073	0200111
16	TAILINGS RETHRESHER CHAIN	1	AXE23140	Chain
16	TAILINGS RETHRESHER CHAIN	1	AXE54619	Chain
17	TAILINGS RETHRESHER	1	H240895	0702225
18	CLEAN GRAIN ELEVATOR MOD HD	1	H223230	0203515
20	POWERSHAFT TO ELEVATOR JACK SHAFT	1	H154723	0902289
21	POWERSHAFT TO FEED ACCELERATOR JACK SHAFT	2	AH150678	1402217
22	FEED ACCELERATOR (SLOW SPEED KIT 320/790 RPM)	1	H221732	0227204
22	FEED ACCELERATOR (HIGH SPEED - HIGH CAPACITY)	1	HXE54503	0257274
22	FEED ACCELERATOR (STANDARD SPEED)	1	HXE95511	0257264
23	SHOE DRIVE (GATES)	1	HXE82335	0202517
24	CLEANING FAN (STANDARD SPEED)	1	HXE15594	0210192
25	RIGHT HAND CHAIN DRIVE	1	AH232566	Chain
25	RIGHT HAND CHAIN DRIVE	1	AXE28813	Chain
26	OVERSHOT BEATER	1	H240895	0702225

S690 (MODEL YEAR 15)

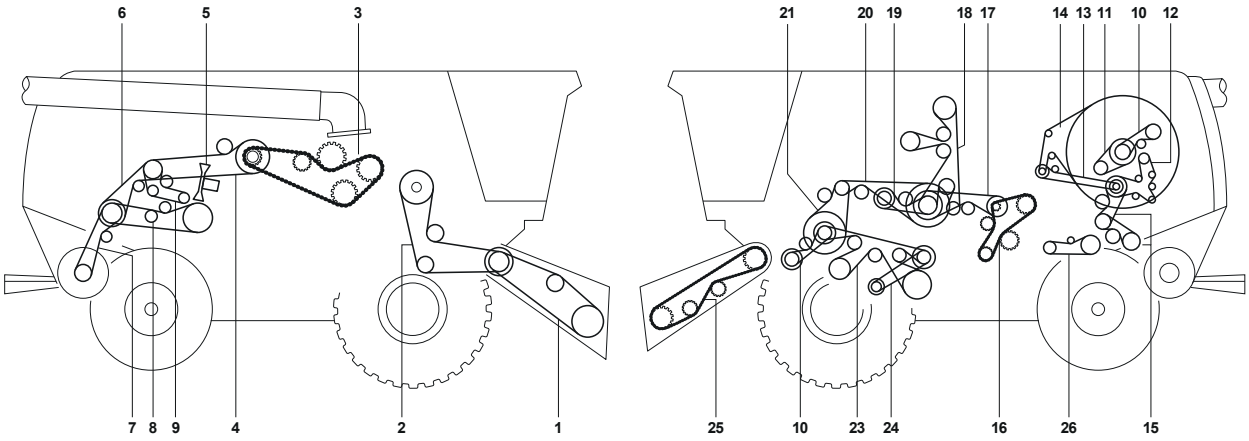

			OE	
1	FIXED FEEDER HOUSE DRIVE (5 SPEED)	1	H229019	0144386
1	FIXED FEEDER HOUSE DRIVE (5 SPEED - FORE AFT)	1	HXE47152	0244374
1	FIXED FEEDER HOUSE (HEAVY DUTY & HIGH TORQUE)	1	H174885	0227353
1	FIXED FEEDER HOUSE (HEAVY DUTY & HIGH TORQUE - FORE AFT)	1	HXE50398	0227342
2	5 SPEED TO FEEDER HOUSE	1	H229018	0244438
2	E-CLUTCH TO FEEDER HOUSE (HEAVY DUTY)	1	HXE95935	0227406
3	UNLOADER-CHAIN	1	AXE15956	Chain
4	UNLOADER-BELT HIGH CAPACITY	2	AH233198	2002237
5	ROTOR DRIVE (HEAVY DUTY-LARGE SHEAVE)--GATES	1	HXE63990	0251431
6	PTO TO STRAW CHOPPER JACK SHAFT (3HC) FC	1	H241230	0744331
7	STRAW CHOPPER JACK SHAFT TO STRAW CHOPPER (2HC) FC	1	H241212	3027274
8	DISCHARGE BEATER (2HC - BANDED BELT)	1	HXE69321	0327375
9	ATB (AFTERTREATMENT BLOWER DRIVE -13.5L)	1	HXE69281	0284298
11	ENGINE FAN BELT (13.5L)	1	HXE32548	0286295
12	ENGINE ALTERNATOR BELT (13.5L)	1	H238831	0285316
13	ROTARY SCREEN DRIVE (ENGINE SIDE)	1	H238867	1400153
14	ROTARY SCREEN DRIVE (SCREEN SIDE)	1	H221273	0200365
15	VACUUM FAN DRIVE (13.5L)	1	HXE38073	0200111
16	TAILINGS RETHRESHER CHAIN	1	AXE23140	Chain
16	TAILINGS RETHRESHER CHAIN	1	AXE54619	Chain
17	TAILINGS RETHRESHER	1	H240895	0702225
18	CLEAN GRAIN ELEVATOR 2HB	1	HXE20763	0223557
20	POWERSHAFT TO ELEVATOR JACK SHAFT	1	H154723	0902289
21	POWERSHAFT TO FEED ACCELERATOR JACK SHAFT	2	AH150678	1402217
22	FEED ACCELERATOR (SLOW SPEED KIT 320/790 RPM)	1	H221732	0227204
22	FEED ACCELERATOR (HIGH SPEED - HIGH CAPACITY)	1	HXE54503	0257274
22	FEED ACCELERATOR (STANDARD SPEED)	1	HXE95511	0257264
23	SHOE DRIVE (GATES)	1	HXE82335	0202517
24	CLEANING FAN (STANDARD SPEED)	1	HXE15594	0210192
25	RIGHT HAND CHAIN DRIVE	1	AH232566	Chain
25	RIGHT HAND CHAIN DRIVE	1	AXE28813	Chain
26	OVERSHOT BEATER	1	H240895	0702225

S660 (MODEL YEAR 16/17)

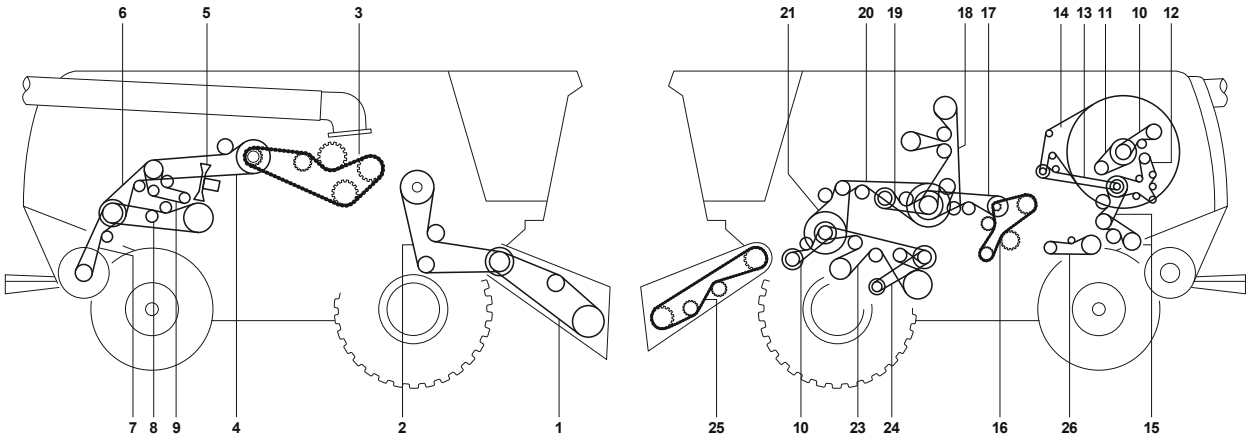

			OE	
1	VAR FEEDER HOUSE (HIGH TORQUE)	1	HXE45928	0217141
1	VAR FEEDER HOUSE (HIGH TORQUE - FORE AFT)	1	HXE50399	0213316
1	VAR FEEDER HOUSE (HEAVY DUTY)	1	H218726	0212325
1	FIXED FEEDER HOUSE (HEAVY DUTY & HIGH TORQUE)	1	H174885	0227353
1	FIXED FEEDER HOUSE (HEAVY DUTY & HIGH TORQUE - FORE AFT)	1	HXE50398	0227342
2	E-CLUTCH TO FEEDER HOUSE (HEAVY DUTY)	1	HXE95935	0227406
3	UNLOADER-CHAIN	1	AXE53952	Chain
4	UNLOADER-BELT	2	AH160080	0202235
5	ROTOR DRIVE (STANDARD DUTY)–CARLISLE	1	HXE46027	0251449
6	PTO TO STRAW CHOPPER JACK SHAFT (3HC) FC	1	H241230	0744331
7	STRAW CHOPPER JACK SHAFT TO STRAW CHOPPER (2HC) FC	1	H241212	3027274
8	DISCHARGE BEATER (HC)	1	HXE15556	0302326
8	DISCHARGE BEATER (2HC - BANDED BELT)	1	HXE69321	0327375
9	ATB (AFTERTREATMENT BLOWER DRIVE - 9L)	1	HXE69280	0284297
10	AIR COMPRESSOR DRIVE (9.0L IT4 & FT4)	1	HXE71043	1585272
11	ENGINE FAN BELT VARIABLE (9.0L)	1	HXE22617	0211130
12	ENGINE ALTERNATOR BELT (9.0L)	1	H238822	0285328
13	ROTARY SCREEN DRIVE (ENGINE SIDE)	1	H238867	1400153
14	ROTARY SCREEN DRIVE (SCREEN SIDE)	1	H221273	0200365
15	VACUUM FAN DRIVE (9.0L UPPER)	1	HXE68015	0200093
15	VACUUM FAN DRIVE (9.0L LOWER)	1	HXE68016	0200082
18	CLEAN GRAIN ELEVATOR	1	H218645	1402501
19	TAILINGS ELEVATOR	1	H154731	0402159
20	POWERSHAFT TO ELEVATOR JACK SHAFT	1	H154723	0902289
21	POWERSHAFT TO FEED ACCELERATOR JACK SHAFT	1	HXE88564	0227263
22	FEED ACCELERATOR (SLOW SPEED KIT 320/790 RPM)	1	H221732	0227204
22	FEED ACCELERATOR (HIGH SPEED - HIGH CAPACITY)	1	HXE54503	0257274
22	FEED ACCELERATOR (STANDARD SPEED)	1	HXE95511	0257264
23	SHOE DRIVE(GATES) 2HC	1	HXE102288	0227564
24	CLEANING FAN (W. 2HC SHOE DRIVE)	1	HXE99294	1310191
25	RIGHT HAND CHAIN DRIVE	1	AH232566	Chain
25	RIGHT HAND CHAIN DRIVE	1	AXE28813	Chain

S670 (MODEL YEAR 16/17)

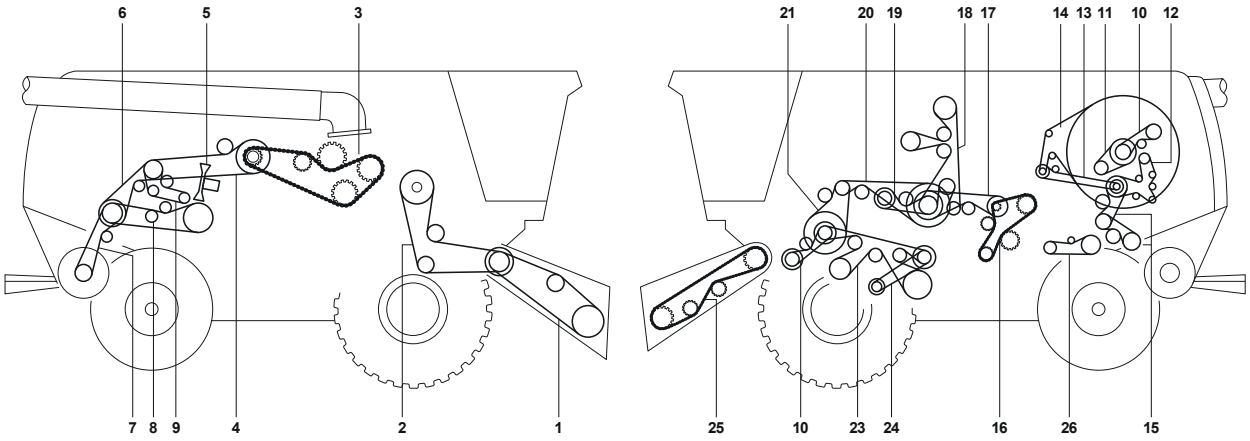

			OE	
1	VAR FEEDER HOUSE (HIGH TORQUE)	1	HXE45928	0217141
1	VAR FEEDER HOUSE (HIGH TORQUE - FORE AFT)	1	HXE50399	0213316
1	FIXED FEEDER HOUSE DRIVE (5 SPEED)	1	H229019	0144386
1	FIXED FEEDER HOUSE DRIVE (5 SPEED - FORE AFT)	1	HXE47152	0244374
1	FIXED FEEDER HOUSE (HEAVY DUTY & HIGH TORQUE)	1	H174885	0227353
1	FIXED FEEDER HOUSE (HEAVY DUTY & HIGH TORQUE - FORE AFT)	1	HXE50398	0227342
2	5 SPEED TO FEEDER HOUSE	1	H229018	0244438
2	E-CLUTCH TO FEEDER HOUSE (HEAVY DUTY)	1	HXE95935	0227406
3	UNLOADER-CHAIN	1	AXE53952	Chain
4	UNLOADER-BELT	2	AH160080	0202235
5	ROTOR DRIVE (STANDARD DUTY)–CARLISLE	1	HXE46027	0251449
6	PTO TO STRAW CHOPPER JACK SHAFT (3HC) FC	1	H241230	0744331
7	STRAW CHOPPER JACK SHAFT TO STRAW CHOPPER (2HC) FC	1	H241212	3027274
8	DISCHARGE BEATER (2HC - BANDED BELT)	1	HXE69321	0327375
9	ATB (AFTERTREATMENT BLOWER DRIVE - 9L)	1	HXE69280	0284297
10	AIR COMPRESSOR DRIVE (9.0L IT4 & FT4)	1	HXE71043	1585272
11	ENGINE FAN BELT VARIABLE (9.0L)	1	HXE22617	0211130
12	ENGINE ALTERNATOR BELT (9.0L)	1	H238822	0285328
13	ROTARY SCREEN DRIVE (ENGINE SIDE)	1	H238867	1400153
14	ROTARY SCREEN DRIVE (SCREEN SIDE)	1	H221273	0200365
15	VACUUM FAN DRIVE (9.0L UPPER)	1	HXE68015	0200093
15	VACUUM FAN DRIVE (9.0L LOWER)	1	HXE68016	0200082
18	CLEAN GRAIN ELEVATOR MOD HD	1	H223230	0203515
19	TAILINGS ELEVATOR	1	H154731	0402159
20	POWERSHAFT TO ELEVATOR JACK SHAFT	1	H154723	0902289
21	POWERSHAFT TO FEED ACCELERATOR JACK SHAFT	1	HXE88564	0227263
22	FEED ACCELERATOR (SLOW SPEED KIT 320/790 RPM)	1	H221732	0227204
22	FEED ACCELERATOR (HIGH SPEED - HIGH CAPACITY)	1	HXE54503	0257274
22	FEED ACCELERATOR (STANDARD SPEED)	1	HXE95511	0257264
23	SHOE DRIVE(GATES) 2HC	1	HXE102288	0227564
24	CLEANING FAN (W. 2HC SHOE DRIVE)	1	HXE99294	1310191
25	RIGHT HAND CHAIN DRIVE	1	AH232566	Chain
25	RIGHT HAND CHAIN DRIVE	1	AXE28813	Chain
26	OVERSHOT BEATER	1	H240895	0702225

S680 (MODEL YEAR 16/17)

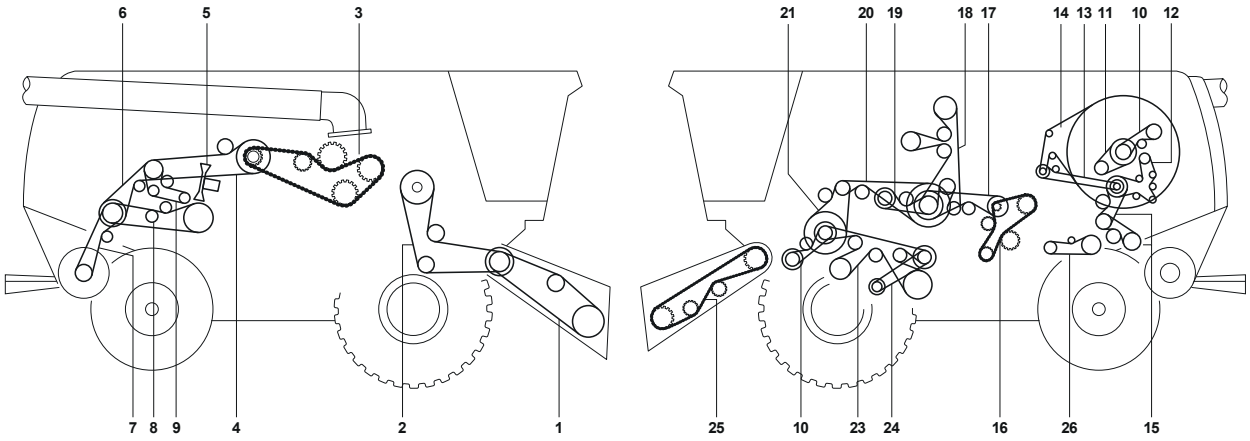

			OE	
1	FIXED FEEDER HOUSE DRIVE (5 SPEED)	1	H229019	0144386
1	FIXED FEEDER HOUSE DRIVE (5 SPEED - FORE AFT)	1	HXE47152	0244374
1	FIXED FEEDER HOUSE (HEAVY DUTY & HIGH TORQUE)	1	H174885	0227353
1	FIXED FEEDER HOUSE (HEAVY DUTY & HIGH TORQUE - FORE AFT)	1	HXE50398	0227342
2	5 SPEED TO FEEDER HOUSE	1	H229018	0244438
2	E-CLUTCH TO FEEDER HOUSE (HEAVY DUTY)	1	HXE95935	0227406
3	UNLOADER-CHAIN	1	AXE15956	Chain
4	UNLOADER-BELT HIGH CAPACITY	2	AH233198	2002237
5	ROTOR DRIVE (HEAVY DUTY-LARGE SHEAVE)--GATES	1	HXE63990	0251431
6	PTO TO STRAW CHOPPER JACK SHAFT (3HC) FC	1	H241230	0744331
7	STRAW CHOPPER JACK SHAFT TO STRAW CHOPPER (2HC) FC	1	H241212	3027274
8	DISCHARGE BEATER (2HC - BANDED BELT)	1	HXE69321	0327375
9	ATB (AFTERTREATMENT BLOWER DRIVE -13.5L)	1	HXE69281	0284298
10	AIR COMPRESSOR DRIVE (13.5L IT4 & FT4)	1	HXE71061	0373264
11	ENGINE FAN BELT (13.5L)	1	HXE32548	0286295
12	ENGINE ALTERNATOR BELT (13.5L)	1	H238831	0285316
13	ROTARY SCREEN DRIVE (ENGINE SIDE)	1	H238867	1400153
14	ROTARY SCREEN DRIVE (SCREEN SIDE)	1	H221273	0200365
15	VACUUM FAN DRIVE (13.5L)	1	HXE38073	0200111
16	TAILINGS RETHRESHER CHAIN	1	AXE54619	Chain
17	TAILINGS RETHRESHER	1	H240895	0702225
18	CLEAN GRAIN ELEVATOR MOD HD	1	H223230	0203515
20	POWERSHAFT TO ELEVATOR JACK SHAFT	1	H154723	0902289
21	POWERSHAFT TO FEED ACCELERATOR JACK SHAFT	1	HXE88564	0227263
22	FEED ACCELERATOR (SLOW SPEED KIT 320/790 RPM)	1	H221732	0227204
22	FEED ACCELERATOR (HIGH SPEED - HIGH CAPACITY)	1	HXE54503	0257274
22	FEED ACCELERATOR (STANDARD SPEED)	1	HXE95511	0257264
23	SHOE DRIVE (GATES) 2HC	1	HXE102288	0227564
24	CLEANING FAN (W. 2HC SHOE DRIVE)	1	HXE99294	1310191
25	RIGHT HAND CHAIN DRIVE	1	AH232566	Chain
25	RIGHT HAND CHAIN DRIVE	1	AXE28813	Chain
26	OVERSHOT BEATER	1	H240895	0702225

S690 (MODEL YEAR 16/17)

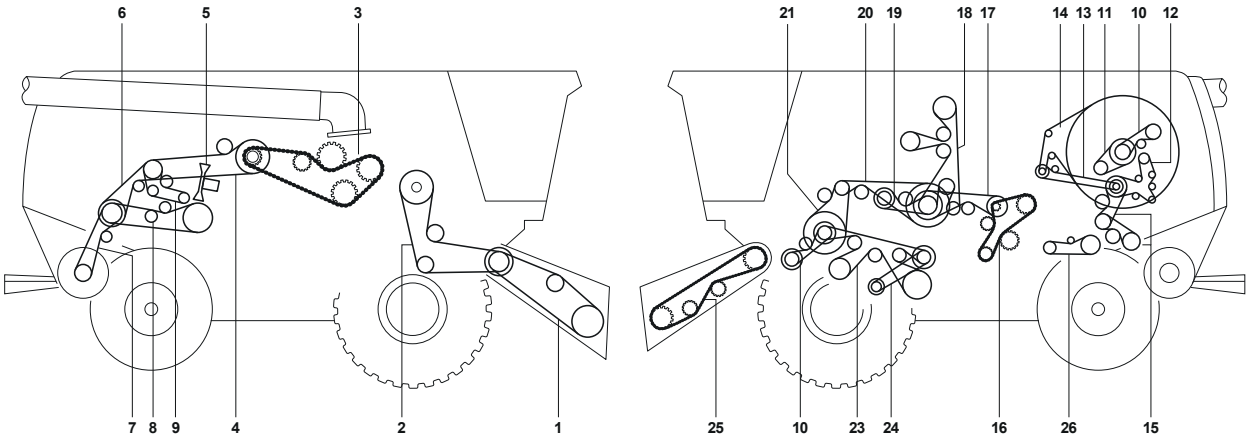

			OE	
1	FIXED FEEDER HOUSE DRIVE (5 SPEED)	1	H229019	0144386
1	FIXED FEEDER HOUSE DRIVE (5 SPEED - FORE AFT)	1	HXE47152	0244374
1	FIXED FEEDER HOUSE (HEAVY DUTY & HIGH TORQUE)	1	H174885	0227353
1	FIXED FEEDER HOUSE (HEAVY DUTY & HIGH TORQUE - FORE AFT)	1	HXE50398	0227342
2	5 SPEED TO FEEDER HOUSE	1	H229018	0244438
2	E-CLUTCH TO FEEDER HOUSE (HEAVY DUTY)	1	HXE95935	0227406
3	UNLOADER-CHAIN	1	AXE15956	Chain
4	UNLOADER-BELT HIGH CAPACITY	2	AH233198	2002237
5	ROTOR DRIVE (HEAVY DUTY-LARGE SHEAVE)--GATES	1	HXE63990	0251431
6	PTO TO STRAW CHOPPER JACK SHAFT (3HC) FC	1	H241230	0744331
7	STRAW CHOPPER JACK SHAFT TO STRAW CHOPPER (2HC) FC	1	H241212	3027274
8	DISCHARGE BEATER (2HC - BANDED BELT)	1	HXE69321	0327375
9	ATB (AFTERTREATMENT BLOWER DRIVE -13.5L)	1	HXE69281	0284298
10	AIR COMPRESSOR DRIVE (13.5L IT4 & FT4)	1	HXE71061	0373264
11	ENGINE FAN BELT (13.5L)	1	HXE32548	0286295
12	ENGINE ALTERNATOR BELT (13.5L)	1	H238831	0285316
13	ROTARY SCREEN DRIVE (ENGINE SIDE)	1	H238867	1400153
14	ROTARY SCREEN DRIVE (SCREEN SIDE)	1	H221273	0200365
15	VACUUM FAN DRIVE (13.5L)	1	HXE38073	0200111
16	TAILINGS RETHRESHER CHAIN	1	AXE54619	Chain
17	TAILINGS RETHRESHER	1	H240895	0702225
18	CLEAN GRAIN ELEVATOR 2HB	1	HXE20763	0223557
20	POWERSHAFT TO ELEVATOR JACK SHAFT	1	H154723	0902289
21	POWERSHAFT TO FEED ACCELERATOR JACK SHAFT	1	HXE88564	0227263
22	FEED ACCELERATOR (SLOW SPEED KIT 320/790 RPM)	1	H221732	0227204
22	FEED ACCELERATOR (HIGH SPEED - HIGH CAPACITY)	1	HXE54503	0257274
22	FEED ACCELERATOR (STANDARD SPEED)	1	HXE95511	0257264
23	SHOE DRIVE (GATES) 2HC	1	HXE102288	0227564
24	CLEANING FAN (W. 2HC SHOE DRIVE)	1	HXE99294	1310191
25	RIGHT HAND CHAIN DRIVE	1	AH232566	Chain
25	RIGHT HAND CHAIN DRIVE	1	AXE28813	Chain
26	OVERSHOT BEATER	1	H240895	0702225

S760 (MODEL YEAR 18)

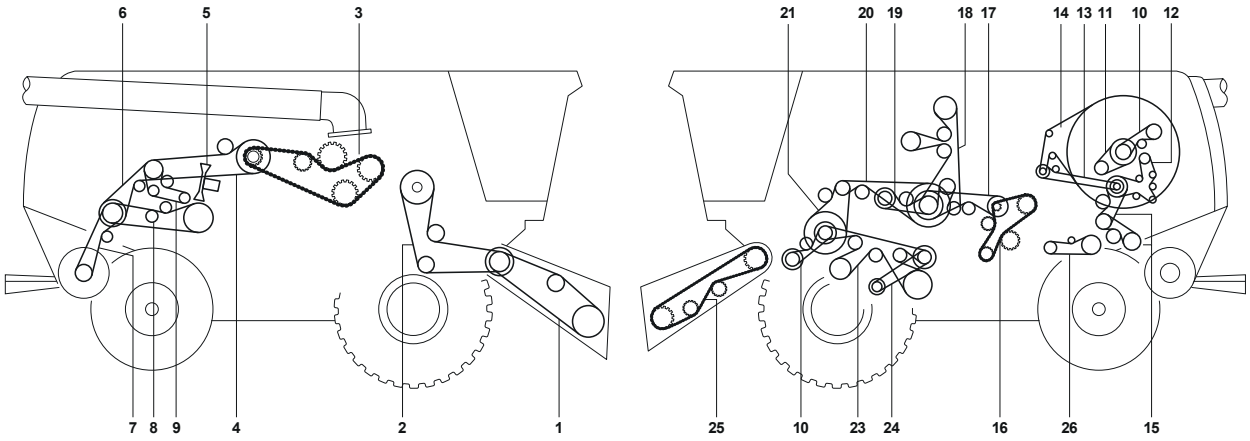

			OE	
1	VAR FEEDER HOUSE (HIGH TORQUE)	1	HXE45928	0217141
1	VAR FEEDER HOUSE (HIGH TORQUE - FORE AFT)	1	HXE50399	0213316
1	VAR FEEDER HOUSE (HEAVY DUTY)	1	H218726	0212325
1	FIXED FEEDER HOUSE (HEAVY DUTY & HIGH TORQUE)	1	H174885	0227353
1	FIXED FEEDER HOUSE (HEAVY DUTY & HIGH TORQUE - FORE AFT)	1	HXE50398	0227342
2	E-CLUTCH TO FEEDER HOUSE (HEAVY DUTY)	1	HXE95935	0227406
3	UNLOADER-CHAIN	1	AXE53952	Chain
4	UNLOADER-BELT	2	AH160080	0202235
5	ROTOR DRIVE (STANDARD DUTY)–GATES	1	HXE46027	0251449
6	PTO TO STRAW CHOPPER JACK SHAFT (3HC) FC	1	H241230	0744331
7	STRAW CHOPPER JACK SHAFT TO STRAW CHOPPER (2HC) FC	1	H241212	3027274
8	DISCHARGE BEATER (HC)	1	HXE15556	0302326
8	DISCHARGE BEATER (2HC - BANDED BELT)	1	HXE69321	0327375
9	ATB (AFTERTREATMENT BLOWER DRIVE - 9L)	1	HXE69280	0284297
10	AIR COMPRESSOR DRIVE (9.0L IT4 & FT4)	1	HXE71043	1585272
11	ENGINE FAN BELT VARIABLE (9.0L)	1	HXE22617	0211130
12	ENGINE ALTERNATOR BELT (9.0L)	1	H238822	0285328
13	ROTARY SCREEN DRIVE (ENGINE SIDE)	1	H238867	1400153
14	ROTARY SCREEN DRIVE (SCREEN SIDE)	1	H221273	0200365
15	VACUUM FAN DRIVE (9.0L UPPER)	1	HXE68015	0200093
15	VACUUM FAN DRIVE (9.0L LOWER)	1	HXE68016	0200082
18	CLEAN GRAIN ELEVATOR	1	H218645	1402501
19	TAILINGS ELEVATOR	1	H154731	0402159
20	POWERSHAFT TO ELEVATOR JACK SHAFT	1	H154723	0902289
21	POWERSHAFT TO FEED ACCELERATOR JACK SHAFT	1	HXE88564	0227263
22	FEED ACCELERATOR (SLOW SPEED KIT 320/790 RPM)	1	H221732	0227204
22	FEED ACCELERATOR (HIGH SPEED - HIGH CAPACITY)	1	HXE54503	0257274
22	FEED ACCELERATOR (STANDARD SPEED)	1	HXE95511	0257264
23	SHOE DRIVE(GATES) 2HC	1	HXE102288	0227564
24	CLEANING FAN (W. 2HC SHOE DRIVE)	1	HXE99294	1310191
25	RIGHT HAND CHAIN DRIVE	1	AH232566	Chain
25	RIGHT HAND CHAIN DRIVE	1	AXE28813	Chain

S770 (MODEL YEAR 18)

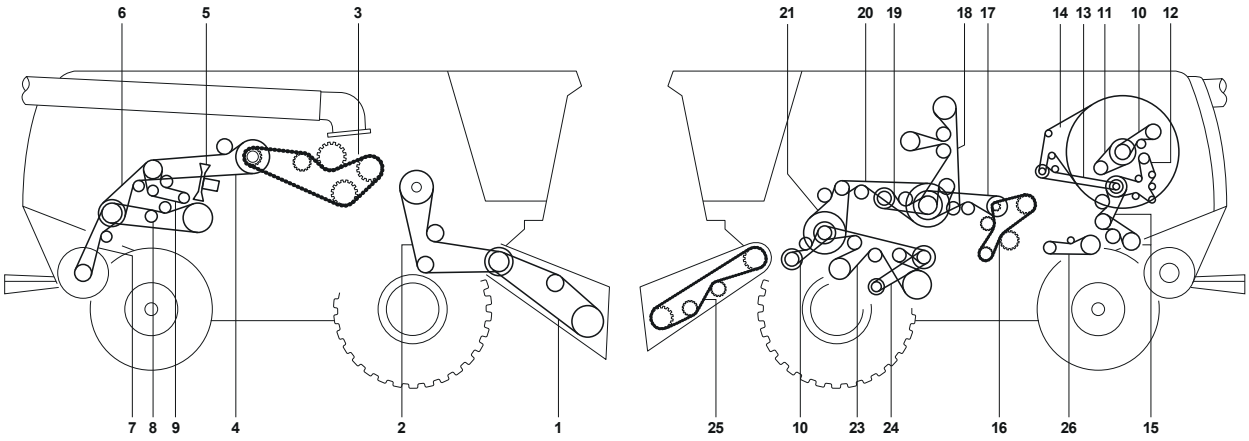

			OE	Gates
1	VAR FEEDER HOUSE (HIGH TORQUE)	1	HXE45928	0217141
1	VAR FEEDER HOUSE (HIGH TORQUE - FORE AFT)	1	HXE50399	0213316
1	FIXED FEEDER HOUSE DRIVE (5 SPEED)	1	H229019	0144386
1	FIXED FEEDER HOUSE DRIVE (5 SPEED - FORE AFT)	1	HXE47152	0244374
1	FIXED FEEDER HOUSE (HEAVY DUTY & HIGH TORQUE)	1	H174885	0227353
1	FIXED FEEDER HOUSE (HEAVY DUTY & HIGH TORQUE - FORE AFT)	1	HXE50398	0227342
2	5 SPEED TO FEEDER HOUSE	1	H229018	0244438
2	E-CLUTCH TO FEEDER HOUSE (HEAVY DUTY)	1	HXE95935	0227406
3	UNLOADER-CHAIN	1	AXE53952	Chain
4	UNLOADER-BELT	2	AH160080	0202235
5	ROTOR DRIVE (STANDARD DUTY)	1	HXE46027	0251449
6	PTO TO STRAW CHOPPER JACK SHAFT (3HC) FC	1	H241230	0744331
7	STRAW CHOPPER JACK SHAFT TO STRAW CHOPPER (2HC) FC	1	H241212	3027274
8	DISCHARGE BEATER (2HC - BANDED BELT)	1	HXE69321	0327375
9	ATB (AFTERTREATMENT BLOWER DRIVE - 9L)	1	HXE69280	0284297
10	AIR COMPRESSOR DRIVE (9.0L IT4 & FT4)	1	HXE71043	1585272
11	ENGINE FAN BELT VARIABLE (9.0L)	1	HXE22617	0211130
12	ENGINE ALTERNATOR BELT (9.0L)	1	H238822	0285328
13	ROTARY SCREEN DRIVE (ENGINE SIDE)	1	H238867	1400153
14	ROTARY SCREEN DRIVE (SCREEN SIDE)	1	H221273	0200365
15	VACUUM FAN DRIVE (9.0L UPPER)	1	HXE68015	0200093
15	VACUUM FAN DRIVE (9.0L LOWER)	1	HXE68016	0200082
18	CLEAN GRAIN ELEVATOR MOD HD	1	H223230	0203515
19	TAILINGS ELEVATOR	1	H154731	0402159
20	POWERSHAFT TO ELEVATOR JACK SHAFT	1	H154723	0902289
21	POWERSHAFT TO FEED ACCELERATOR JACK SHAFT	1	HXE88564	0227263
22	FEED ACCELERATOR (SLOW SPEED KIT 320/790 RPM)	1	H221732	0227204
22	FEED ACCELERATOR (HIGH SPEED - HIGH CAPACITY)	1	HXE54503	0257274
22	FEED ACCELERATOR (STANDARD SPEED)	1	HXE95511	0257264
23	SHOE DRIVE (GATES) 2HC	1	HXE102288	0227564
24	CLEANING FAN (W. 2HC SHOE DRIVE)	1	HXE99294	1310191
25	RIGHT HAND CHAIN DRIVE	1	AH232566	Chain
25	RIGHT HAND CHAIN DRIVE	1	AXE28813	Chain
26	OVERSHOT BEATER	1	H240895	0702225

S780 (MODEL YEAR 18)

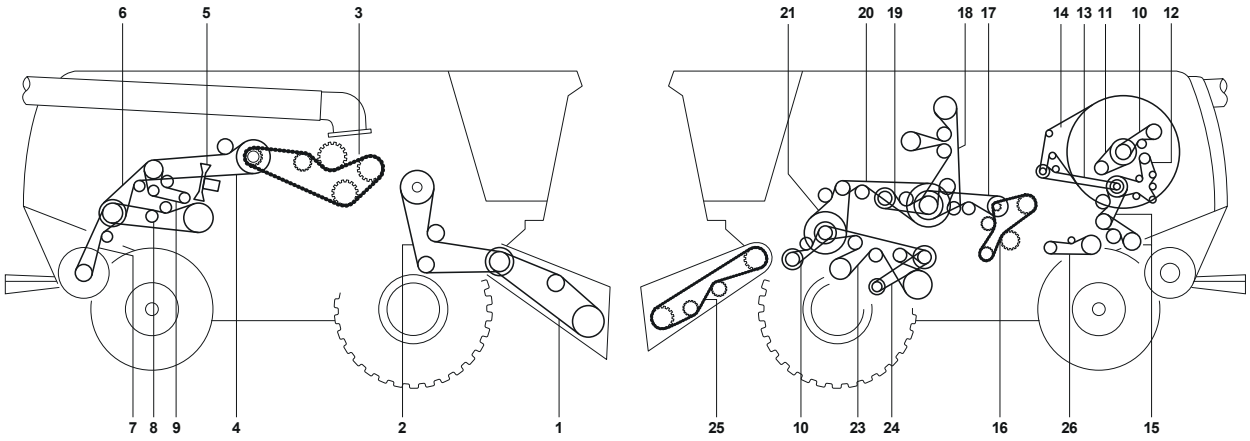

			OE	
1	FIXED FEEDER HOUSE DRIVE (5 SPEED)	1	H229019	0144386
1	FIXED FEEDER HOUSE DRIVE (5 SPEED - FORE AFT)	1	HXE47152	0244374
1	FIXED FEEDER HOUSE (HEAVY DUTY & HIGH TORQUE)	1	H174885	0227353
1	FIXED FEEDER HOUSE (HEAVY DUTY & HIGH TORQUE - FORE AFT)	1	HXE50398	0227342
2	5 SPEED TO FEEDER HOUSE	1	H229018	0244438
2	E-CLUTCH TO FEEDER HOUSE (HEAVY DUTY)	1	HXE95935	0227406
3	UNLOADER-CHAIN	1	AXE15956	Chain
4	UNLOADER-BELT HIGH CAPACITY	2	AH233198	2002237
5	ROTOR DRIVE (HEAVY DUTY-LARGE SHEAVE)--GATES	1	HXE63990	0251431
6	PTO TO STRAW CHOPPER JACK SHAFT (3HC) FC	1	H241230	0744331
7	STRAW CHOPPER JACK SHAFT TO STRAW CHOPPER (2HC) FC	1	H241212	3027274
8	DISCHARGE BEATER (2HC - BANDED BELT)	1	HXE69321	0327375
9	ATB (AFTERTREATMENT BLOWER DRIVE -13.5L)	1	HXE69281	0284298
10	AIR COMPRESSOR DRIVE (13.5L IT4 & FT4)	1	HXE71061	0373264
11	ENGINE FAN BELT (13.5L)	1	HXE32548	0286295
12	ENGINE ALTERNATOR BELT (13.5L)	1	H238831	0285316
13	ROTARY SCREEN DRIVE (ENGINE SIDE)	1	H238867	1400153
14	ROTARY SCREEN DRIVE (SCREEN SIDE)	1	H221273	0200365
15	VACUUM FAN DRIVE (13.5L)	1	HXE38073	0200111
16	TAILINGS RETHRESHER CHAIN	1	AXE54619	Chain
17	TAILINGS RETHRESHER	1	H240895	0702225
18	CLEAN GRAIN ELEVATOR MOD HD	1	H223230	0203515
20	POWERSHAFT TO ELEVATOR JACK SHAFT	1	H154723	0902289
21	POWERSHAFT TO FEED ACCELERATOR JACK SHAFT	1	HXE88564	0227263
22	FEED ACCELERATOR (SLOW SPEED KIT 320/790 RPM)	1	H221732	0227204
22	FEED ACCELERATOR (HIGH SPEED - HIGH CAPACITY)	1	HXE54503	0257274
22	FEED ACCELERATOR (STANDARD SPEED)	1	HXE95511	0257264
23	SHOE DRIVE(GATES) 2HC	1	HXE102288	0227564
24	CLEANING FAN (W. 2HC SHOE DRIVE)	1	HXE99294	1310191
25	RIGHT HAND CHAIN DRIVE	1	AH232566	Chain
25	RIGHT HAND CHAIN DRIVE	1	AXE28813	Chain
26	OVERSHOT BEATER	1	H240895	0702225

S790 (MODEL YEAR 18)

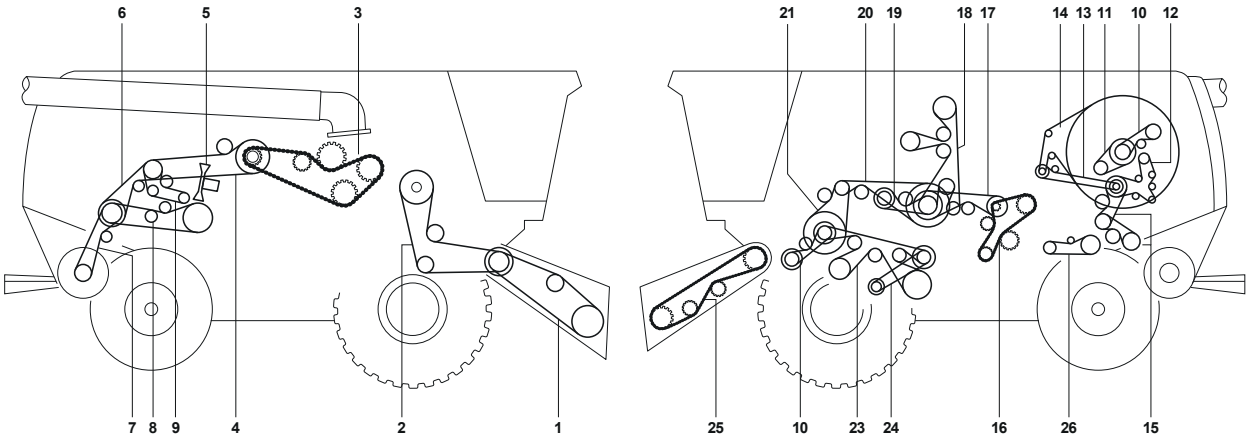

			OE	
1	FIXED FEEDER HOUSE DRIVE (5 SPEED)	1	H229019	0144386
1	FIXED FEEDER HOUSE DRIVE (5 SPEED - FORE AFT)	1	HXE47152	0244374
1	FIXED FEEDER HOUSE (HEAVY DUTY & HIGH TORQUE)	1	H174885	0227353
1	FIXED FEEDER HOUSE (HEAVY DUTY & HIGH TORQUE - FORE AFT)	1	HXE50398	0227342
2	5 SPEED TO FEEDER HOUSE	1	H229018	0244438
2	E-CLUTCH TO FEEDER HOUSE (HEAVY DUTY)	1	HXE95935	0227406
3	UNLOADER-CHAIN	1	AXE15956	Chain
4	UNLOADER-BELT HIGH CAPACITY	2	AH233198	2002237
5	ROTOR DRIVE (HEAVY DUTY-LARGE SHEAVE)--GATES	1	HXE63990	0251431
6	PTO TO STRAW CHOPPER JACK SHAFT (3HC) FC	1	H241230	0744331
7	STRAW CHOPPER JACK SHAFT TO STRAW CHOPPER (2HC) FC	1	H241212	3027274
8	DISCHARGE BEATER (2HC - BANDED BELT)	1	HXE69321	0327375
9	ATB (AFTERTREATMENT BLOWER DRIVE -13.5L)	1	HXE69281	0284298
10	AIR COMPRESSOR DRIVE (13.5L IT4 & FT4)	1	HXE71061	0373264
11	ENGINE FAN BELT (13.5L)	1	HXE32548	0286295
12	ENGINE ALTERNATOR BELT (13.5L)	1	H238831	0285316
13	ROTARY SCREEN DRIVE (ENGINE SIDE)	1	H238867	1400153
14	ROTARY SCREEN DRIVE (SCREEN SIDE)	1	H221273	0200365
15	VACUUM FAN DRIVE (13.5L)	1	HXE38073	0200111
16	TAILINGS RETHRESHER CHAIN	1	AXE54619	Chain
17	TAILINGS RETHRESHER	1	H240895	0702225
18	CLEAN GRAIN ELEVATOR 2HB	1	HXE20763	0223557
20	POWERSHAFT TO ELEVATOR JACK SHAFT	1	H154723	0902289
21	POWERSHAFT TO FEED ACCELERATOR JACK SHAFT	1	HXE88564	0227263
22	FEED ACCELERATOR (SLOW SPEED KIT 320/790 RPM)	1	H221732	0227204
22	FEED ACCELERATOR (HIGH SPEED - HIGH CAPACITY)	1	HXE54503	0257274
22	FEED ACCELERATOR (STANDARD SPEED)	1	HXE95511	0257264
23	SHOE DRIVE (GATES) 2HC	1	HXE102288	0227564
24	CLEANING FAN (W. 2HC SHOE DRIVE)	1	HXE99294	1310191
25	RIGHT HAND CHAIN DRIVE	1	AH232566	Chain
25	RIGHT HAND CHAIN DRIVE	1	AXE28813	Chain
26	OVERSHOT BEATER	1	H240895	0702225

T550 - T560 (EUROPEAN EDITION)

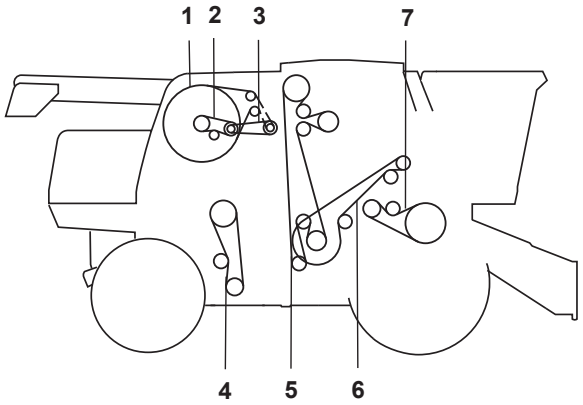

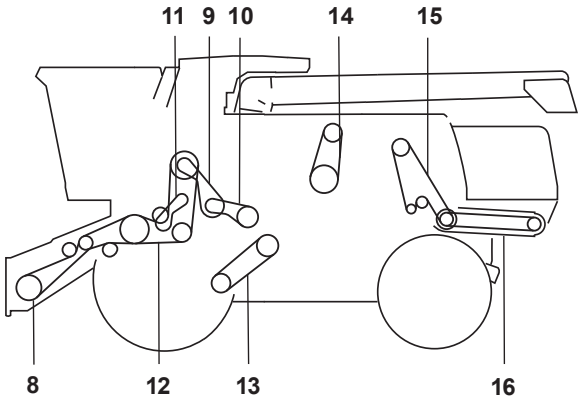

			OE	
1		1	H175628	0200328
2		1	H174455	0385331
3		1	H146636	0217106
4		1	Z59557	0202230
5		1	H141166	1402609
6		1	H128010	2002365
7		1	H115881	1425257
8		1	H176766	0227255
8	FOR HILLMASTER ONLY	1	H202821	0227262
8		1	HXE12426	0224256
8		1	HXE12427	1424250 EE-TECH
9	FOR N=450 RPM - 3 GROOVES	1	Z103844	0124208
10	FOR N=900 RPM - 2 GROOVES	1	Z103845	0223195
11		1	H139963	0201109
12		1	H176765	0227482
12		1	H177383	0203437
13		1	H152146	0210220
14		2	AH158880	0102181
15		1	H177177	0224390 EE-TECH
16	FOR CORN	1	H177178	1524411 EE-TECH
16		1	Z59286	0224406 EE-TECH

T660 - T670 - T670 (NA EDITION)

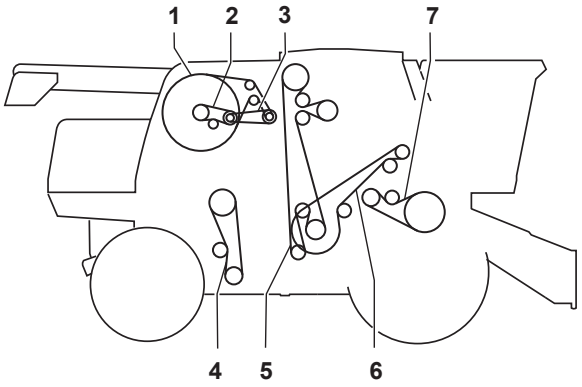

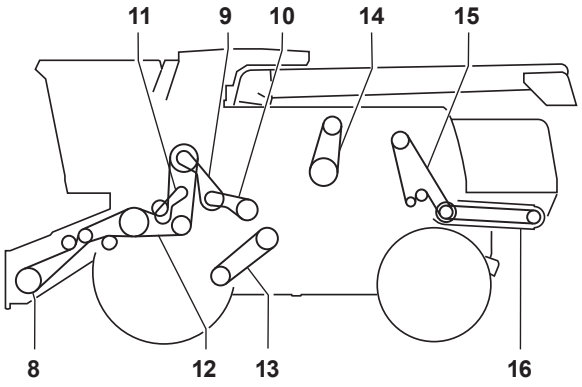

			OE	
1		1	H175628	0200328
2		1	H174455	0385331
3		1	H146636	0217106
4		1	Z59557	0202230
5		1	H141166	1402609
6		1	H128010	2002365
7		1	H115881	1425257
8		1	H176766	0227255
8	FOR HILLMASTER ONLY	1	H202821	0227262
8		1	HXE12426	0224256
8		1	HXE12427	1424250 EE-TECH
9	FOR N=450 RPM - 3 GROOVES	1	Z103844	0124208
10	FOR N=900 RPM - 2 GROOVES	1	Z103845	0223195
11		1	H139963	0201109
12		1	H176765	0227482
12		1	HXE12425	0224476
13		1	H152146	0210220
14		2	AH158880	0102181
15		1	H177177	0224390 EE-TECH
16	FOR CORN	1	H177178	1524411 EE-TECH
16		1	Z59286	0224406 EE-TECH
17		1	Z59286	0224406 EE-TECH

W540

			OE	
1		1	HXE28843	1485332
1	FOR 6.8L ENGINE	1	HXE40946	0285308
2		1	AH139436	0702151
2		1	AH163931	1602150
3		1	HXE51101	0215195
4		1	Z67285	0301183
5		1	H176765	0227482
6		1	AH158880	0102181
7		1	H177177	0224390 EE-TECH
8		1	Z78834	0301198
9		1	H177442	1524427
9		1	Z59286	0224406 EE-TECH
10		1	H152146	0210220
10		1	H152180	1410203
11		1	H176766	0227255
11	FOR HILLMASTER	1	H202821	0227262

W550

			OE	
1		1	HXE12425	0224476
2		1	AH158880	0102181
3		1	H177177	0224390 EE-TECH
4		1	Z78834	0301198
5		1	H177442	1524427
5		1	Z59286	0224406 EE-TECH
6		1	H152146	0210220
6		1	H152180	1410203
7		1	H176766	0227255
7	FOR HILLMASTER	1	H202821	0227262
8	TIER 2	1	HXE22087	0285329
8	TIER 4	1	HXE40946	0285308
9		1	AH139436	0702151
9		1	AH163931	1602150
10		1	HXE51101	0215195
11		1	Z67285	0301183

W650

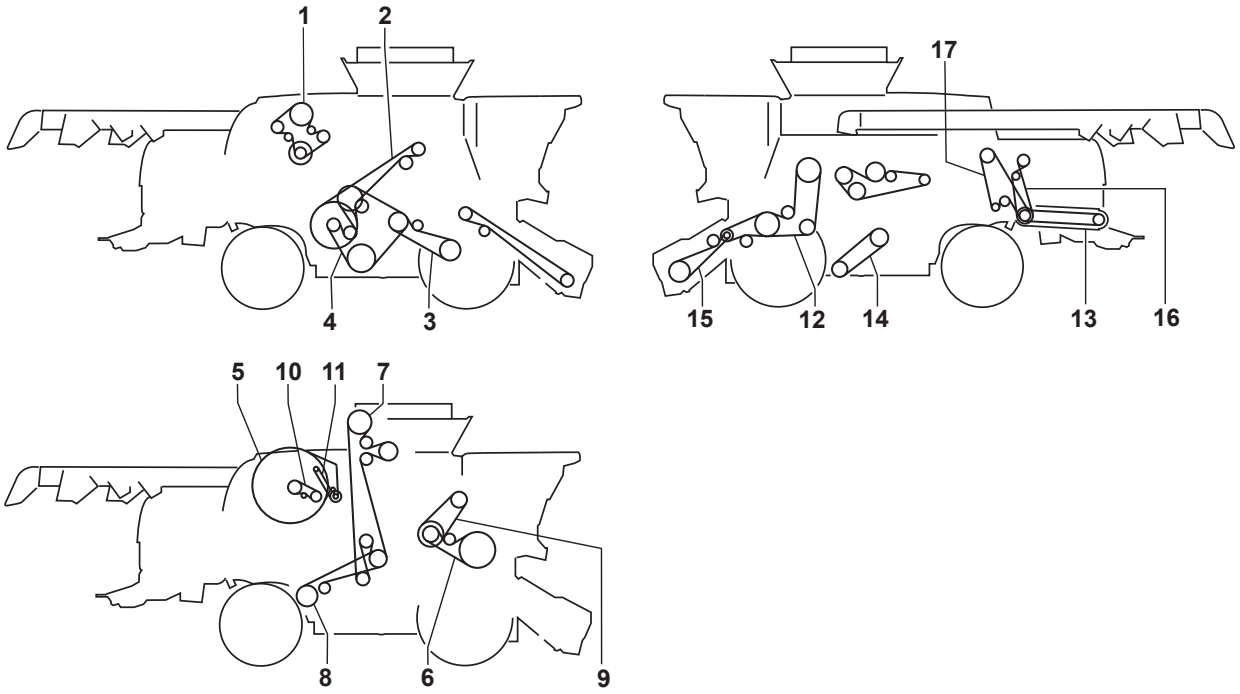

			OE	
1		1	R504618	1485332
2		1	H128010	2002365
3		1	Z67285	0301183
4		1	Z58752	1902354
5		1	H175628	0200328
6		1	H115881	1425257
7		1	HXE51300	0202609
8		1	N110085	0302251
9		1	H210476	0215195
10		1	H177186	0285333
11		1	H146636	0217106
12		1	HXE12425	0224476
13		1	Z59286	0224406 EE-TECH
14		1	H152146	0210220
15		1	HXE12426	0224256
15		1	HXE12427	1424250 EE-TECH
16		1	Z78834	0301198
17		1	H177177	0224390 EE-TECH

W660

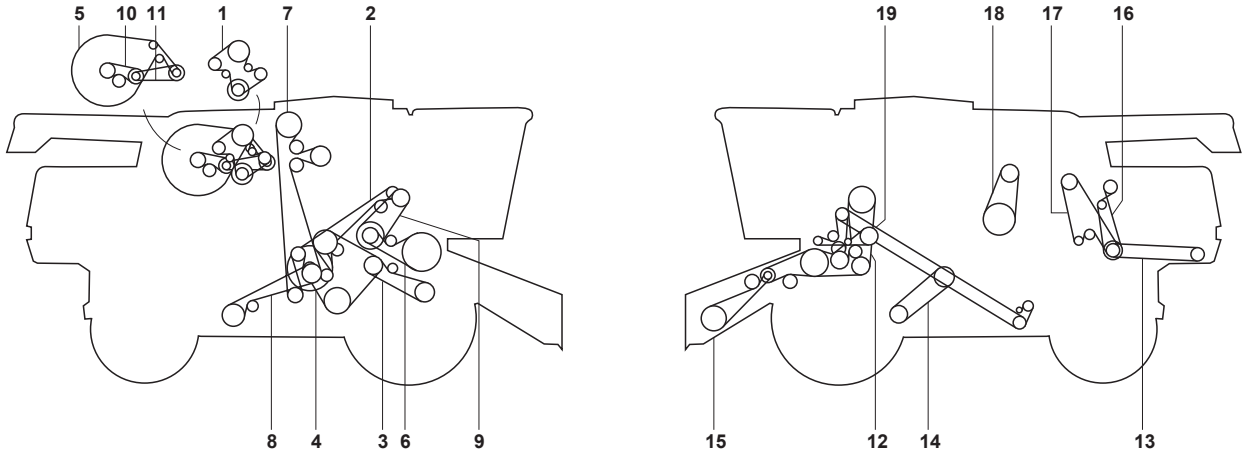

			OE	
1	W660 MY 2011, W660 MY 2014	1	HXE11117	1285316
2		1	H128010	2002365
3		1	Z67285	0301183
4		1	Z58752	1902354
5		1	H175632	0200285
5	W660 MY 2011, W660 MY 2012, W660 MY 2014	1	H175628	0200328
5	W650 MY 2014, W660 MY 2012, W660 MY 2014	1	H221273	0200365
6		1	H115881	1425257
7		1	HXE51300	0202609
8		1	N110085	0302251
9		1	HXE51101	0215195
10	W660 MY 2012, W660 MY 2014	1	HXE23801	0711194
10	W660 MY 2011	1	H146636	0217106
11		1	H146636	0217106
11	W660 MY 2012, W660 MY 2014	1	H238871	1400076
12		1	H176765	0227482
12	W660 MY 2012, W660 MY 2014	1	HXE12425	0224476
13		1	H177442	1524427
13		1	H177178	1524411 EE-TECH
13		1	Z59286	0224406 EE-TECH
14		1	H152146	0210220
14		1	H152180	1410203
15		1	H176766	0227255
15		1	H202821	0227262
15	W660 MY 2011, W660 MY 2012, W660 MY 2014	1	HXE12426	0224256
15	W660 MY 2011, W660 MY 2012, W660 MY 2014	1	HXE12427	1424250 EE-TECH
16		1	Z78834	0301198
17		1	H177177	0224390 EE-TECH
18		1	AH158880	0102181
19		1	AH139436	0702151
19		1	AH163931	1602150

WINDROWER 2270 - 2280

			OE	Gates
1	COMPRESSOR DRIVE	1	E50973	0100083
2	ALTERNATOR AND FAN DRIVE	1	R97758	0201092
3	PLATFORM DRIVE	1	E50873	0225155
4	PLATFORM DRIVE	1	E58967	0225151

WINDROWER 2320

			OE	Gates
1	ENGINE FAN DRIVE (GAS ENGINE)	1	E50973	0100083
2	GOVERNOR DRIVE (GAS ENGINE)	1	E57428	0172225
3	COMPRESSOR DRIVE (GAS ENGINE)	1	E63457	0200090
4	PLATFORM DRIVE (GAS ENGINE)	1	E56262	0269238

WINDROWER 2360

			OE	Gates
1	ALTERNATOR DRIVE (GAS ENGINE)	1	W35813	☎
2	ALTERNATOR DRIVE (DIESEL ENGINE)	1	T25130	1901094
3	GOVERNOR (GAS ENGINE)	1	E57428	0172225
4	PLATFORM DRIVE	1	W35774	☎
5	PLATFORM DRIVE	1	W35600	☎
6	HYDRAULIC PUMP DRIVE	1	W35598	☎

WINDROWER 2420

			OE	Gates
1	COMPRESSOR DRIVE (GAS ENGINE)	1	E63457	0200090
2	ENGINE FAN DRIVE (DIESEL ENGINE)	1	R97758	0201092
3	FAN AND COMPRESSOR (GAS ENGINE)	1	E50973	0100083
4	GOVERNOR DRIVE (GAS ENGINE)	1	E57428	0172225
5	PLATFORM DRIVE (DIESEL ENGINE)	1	E56262	0269238

BIG M II

			OE	
1	CONDITIONER DRIVE	1	9251470	☎
2	AUGER DRIVE	1	9215520	☎
3	SIDE MOVER DRIVE	1	9215580	2724161
4	BM2 LEFT AND RIGHT	1	9215370	0325453
5	CENTRAL GEARBOX TO SIDE ARM	1	9215390	1425303
6	FAN BELT	1	9215420	0323229

BIG X 500 (700000 - 773000)

			OE	
1	MAIN DRIVE	1	2159940	2626724
2	GRAIN CONDITIONER CPL TAFEL 31 - 37	1	2168800	0399351
3	CRACKER DRIVE / TENSIONING DEVICE	1	2168800	0399351
4	DIESEL ENGINE	1	270010100	0884332
5	VENTILATOR DRIVE	1	9215601	1101149
6	SIEVE DRUM	1	2253610	☎

BIG X 650 (716400 - 718510)

			OE	
1	MAIN DRIVE	1	2279101	0374856
2	GRAIN CONDITIONER CPL TAFEL 33 - 39	1	2168800	0399351
3	CRACKER DRIVE / TENSIONING DEVICE	1	2168800	0399351
4	DIESEL ENGINE / CLUTCH / AIR CONDITIONER DRIVE	1	2282330	0372240
5	VENTILATOR DRIVE	2	9215460	0137235
5	VENTILATOR DRIVE	1	2282361	1537238
6	SUCTION SYSTEM DRIVE	1	2253560	☎
6	SUCTION SYSTEM DRIVE	1	200216850	☎
7	SIEVE DRUM	1	2253610	☎

BIG X 700

			OE	
1	CRACKER DRIVE	1	2168800	0399351
2	SIEVE DRUM	1	2253610	☎
3	MAIN DRIVE	1	2279101	0374856
4	WATER PUMP - GENERATOR	1	270048110	☎
5	MAIN DRIVE	1	270063910	2674868
6	SIEVE DRUM	1	2253610	☎

BIG X 800 (701805 - 750480)

			OE	
1	MAIN DRIVE	1	200211640	2684901
2	GRAIN CONDITIONER CPL TAFEL 31 - 37	1	2168800	0399351
3	CRACKER DRIVE / TENSIONING DEVICE	1	2168800	0399351
4	DIESEL ENGINE / CLUTCH / SILENCER	1	270015140	☎
4	DIESEL ENGINE / CLUTCH / SILENCER	1	270010100	0884332
5	DIESEL ENGINE	1	270010100	0884332
5	DIESEL ENGINE	1	270017210	1472238
6	VENTILATOR DRIVE	1	200225361	0823205
7	SIEVE DRUM	1	200208260	☎

BIG X 850

			OE	
1	CRACKER DRIVE	1	2168800	0399351
2	SIEVE DRUM	1	2253610	☎
3	MAIN DRIVE	1	270042651	2684887
4	WATER PUMP - GENERATOR	1	270048110	☎

BIG X 1000 (701802 - 750480)

			OE	
1	MAIN DRIVE	1	200211640	2684901
2	GRAIN CONDITIONER CPL TAFEL 31 - 37	1	2168800	0399351
3	CRACKER DRIVE / TENSIONING DEVICE	1	2168800	0399351
4	DIESEL ENGINE / CLUTCH / SILENCER	1	270010100	0884332
5	DIESEL ENGINE	1	270010100	0884332
5	DIESEL ENGINE	1	270016220	0884317
6	VENTILATOR DRIVE	1	200225361	0823205
7	SIEVE DRUM	1	200208260	☎

BIG X 1100

			OE	
1	CRACKER DRIVE	1	2168800	0399351
2	SIEVE DRUM	1	2253610	☎
3	MAIN DRIVE	1	270042651	2684887
4	WATER PUMP - GENERATOR	1	270048110	☎

BIG X V8

			OE	
1	CRACKER DRIVE	1	2168800	0399351
2	SUCTION DRIVE	1	2253560	☎
2	SUCTION DRIVE	1	200216850	☎
3	SIEVE DRUM	1	2253610	☎
4	MAIN DRIVE	1	2279101	0374856
5	AIR CONDITIONING DRIVE	1	2282330	0372240
6	AIR COMPRESSOR	1	2282340	0122155
7	DIESEL ENGINE	1	9215610	2642220
8	FAN DRIVE	1	9215460	0137235
8	FAN DRIVE	1	2282361	1537238

BIG X V12

			OE	
1	CRACKER DRIVE	1	2168800	0399351
2	SUCTION DRIVE	1	2253560	☎
2	SUCTION DRIVE	1	200216850	☎
3	SIEVE DRUM	1	2253610	☎
4	MAIN DRIVE	1	2279091	0384875
5	ADDITIONAL GENERATOR	1	2282321	0372232
6	AIR COMPRESSOR	1	2282350	1472273
7	DIESEL ENGINE	1	270015150	☎
8	AIR CONDITIONING DRIVE	1	9215530	0372231
9	FAN DRIVE	1	9215460	0137235
9	FAN DRIVE	1	2282361	1537238
9	FAN DRIVE	1	270012960	☎
9	FAN DRIVE	1	200229240	0337232

3200

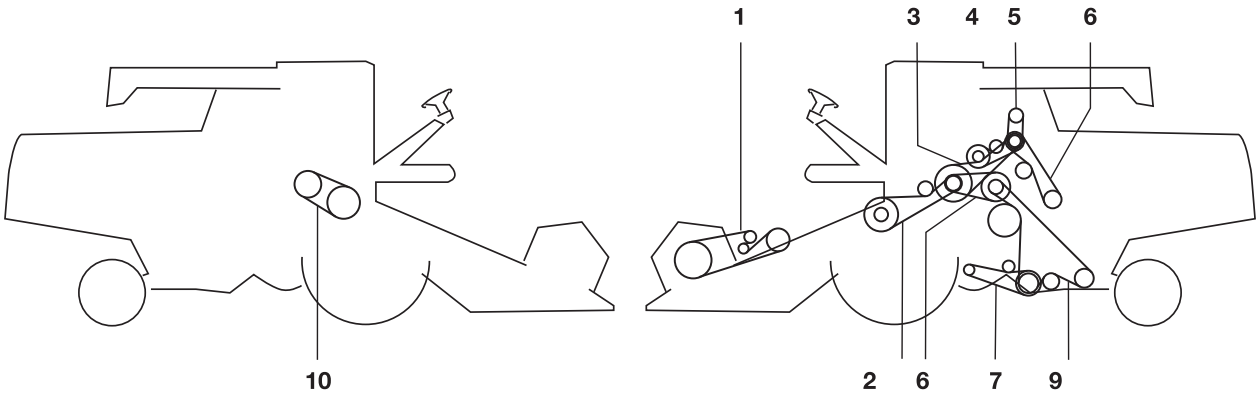

			OE	
1	REEL DRIVE	1	340433458	0702292
2	ELEVATOR DRIVE (UPPER) SHAFT	1	340433428	1902206
3	THRESHING DRUM VARIATOR DRIVE	1	344311220	1424251
4	HYDRAULIC PUMP DRIVE	1	340432232	0201092
5	AUGER DRIVE	1	340433252	1601120
6	HYDRAULIC PUMP DRIVE	1	344310222	☎
7	STRAW WALKER - AUGER DRIVE	1	340433968	2002323
8	RETURN DRIVE	1	340433412	1902144
9	FAN DRIVE	1	340433290	0201191
10	CYLINDER VARIATOR DRIVE	1	340435138	0214173

3300

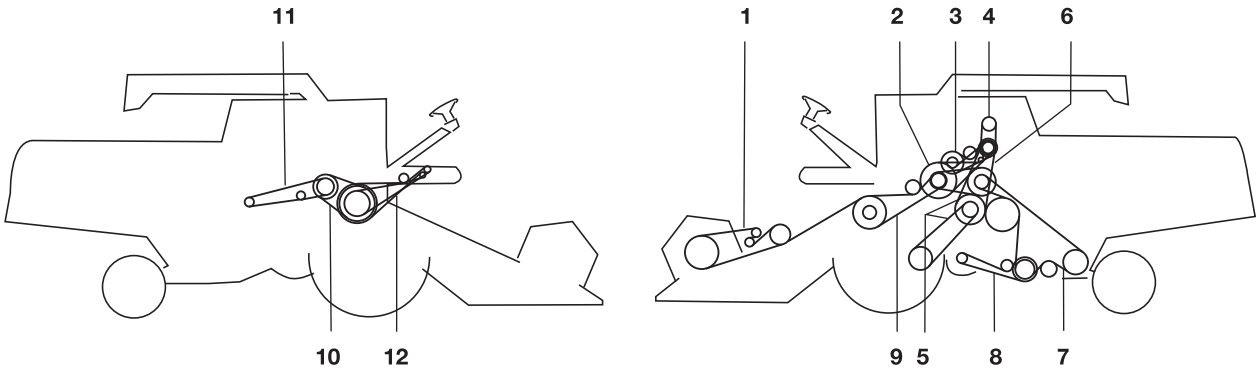

			OE	
1	REEL DRIVE	1	340433458	0702292
2	THRESHING DRUM VARIATOR DRIVE	1	344311217	0224236 EE-TECH
3	UNLOADING SYSTEM - VIBRATOR	1	340433980	0204153
3	CLEAN GRAIN ELEVATOR U-JOINT LOADING AUGER	1	E60212	0302200
3	CLEAN GRAIN ELEVATOR DRIVE	1	H87648	0702212
4	HYDRAULIC PUMP DRIVE	1	340433223	2601079
4	CLEAN GRAIN ELEVATOR COUNTERSHAFT	1	H23817	0302179
5	TRACTION VARIATOR DRIVE	1	340435120	0111213
6	RETURN DRIVE	1	340433412	1902144
6	CLEANING FAN DRIVE	1	H80726	0210131
7	AIR CONDITIONING COMPRESSOR DRIVE	1	H86273	0372232
7	AIR CONDITIONING COMPRESSOR DRIVE	1	H81742	1472236
7	AIR CONDITIONING COMPRESSOR DRIVE 292	1	H80896	0200107
7	STRAW WALKER - AUGER DRIVE	1	340433970	1905344
7	AIR CONDITIONING COMPRESSOR DRIVE	1	H63772	1472238
8	MAIN FAN	1	340433283	0201177
9	CYLINDER	3	AH80500	1401175
9	ELEVATOR DRIVE (UPPER) SHAFT	1	340433432	0302224
10	ENGINE FAN DRIVE	1	H79236	1400119
10	ENGINE FAN CAB (WITH AIR CONDITIONING COMPRESSOR DRIVE)	1	H86271	0372258
10	CYLINDER VARIATOR DRIVE	1	340435138	0214173
11	ENGINE FAN COUNTERSHAFT	1	H79235	0272247
11	FAN DRIVE VARIABLE SPEED	1	340433176	1900174
12	BLOWER DRIVE	1	340433188	1900211
12	STRAW CHOPPER (FRONT)	1	H20407	0702225
13	HYDROSTATIC REEL PUMP	1	H77683	1900095
17	PLATFORM AND FEEDER HOUSE (UPPER)	1	H76028	0203258
18	COUNTERSHAFT (PRIMARY)	2	AH98052	2002167
19	PROPULSION DRIVE (LOWER)	1	H75911	/
20	PROPULSION DRIVE (UPPER)	1	H75911	/
21	STRAW CHOPPER DRIVE (REAR)	1	H79787	0202404
22	ROTARY DEFLECTOR	1	H86039	1900132
22	ROTARY DEFLECTOR	1	H86060	1900136

3300 (CONTINUED)

			OE	
23	ROTARY SCREEN DRIVE	1	H86259	0242268
24	COUNTERSHAFT (SECONDARY)	1	H138762	0202261
25	SHOE SUPPLY AUGERS (GRAIN)	1	H79285	0201264
26	STRAW SPREADER DRIVE	1	H80159	0201215
27	TAILINGS AUGER (LOWER)	1	E63031	0102216
28	UNLOADING AUGER COUNTERSHAFT	1	H76136	1902120
29	ALTERNATOR AND WATERPUMP DRIVE	1	H80897	0172230
30	CYLINDER TACHOMETER	1	H83078	☎

3300 AL

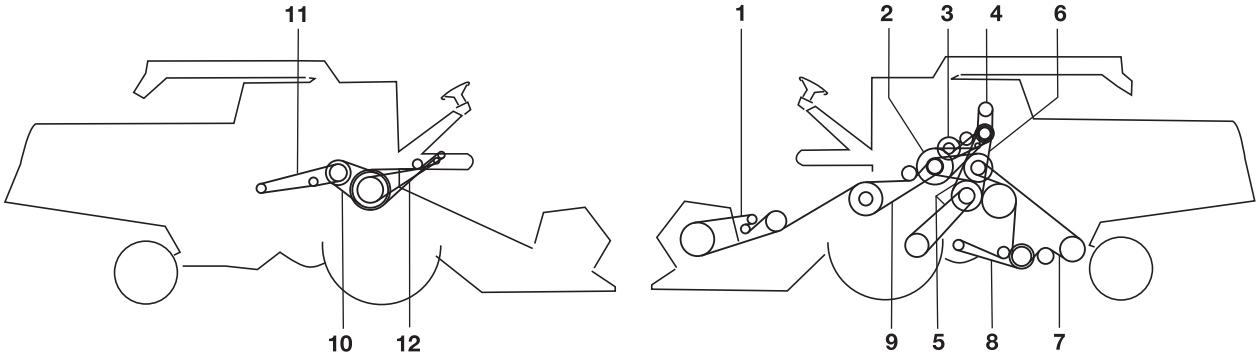

			OE	
1	REEL DRIVE	1	340433458	0702292
2	THRESHING DRUM VARIATOR DRIVE	1	344311217	0224236 EE-TECH
3	RETURN AUGER DRIVE	1	340433252	1601120
4		1	340433239	1901098
5		1	344311212	1924192
6	RETURN DRIVE	1	340433412	1902144
7	STRAW WALKER - AUGER DRIVE	1	340433970	1905344
8	MAIN FAN	1	340433283	0201177
9	ELEVATOR DRIVE (UPPER) SHAFT	1	340433432	0302224
10	CYLINDER VARIATOR DRIVE	1	340435138	0214173
11	FAN DRIVE VARIABLE SPEED	1	340433176	1900174
12	BLOWER DRIVE	1	340433188	1900211

3350 (EX M 112)

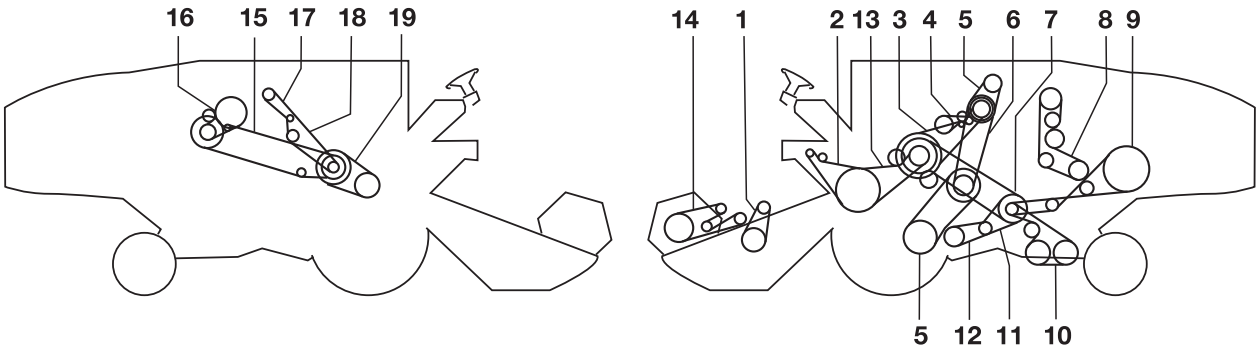

			OE	
1	REEL DRIVE VARIABLE SPEED (1978)	1	340434138	1960189
1	REEL DRIVE VARIABLE SPEED	1	340434140	1961209
2	BLOWER DRIVE	1	340433182	1900196
3	CYLINDER VARIATOR DRIVE	1	344311221	1424276
3	CONVERTER DRIVE	1	340433418	2002167
4	THRESHING DRUM VARIATOR DRIVE	1	344311222	0324279 EE-TECH
4	AUGER DRIVE	1	340433417	0102148
6	OIL PUMP DRIVE	1	340432243	0201109
6	HYDRAULIC PUMP DRIVE	1	340433244	0401111
7	RETURN DRIVE	1	340433537	1903286
8	FAN DRIVE	1	340433289	1901188
9	STRAW WALKER DRIVE	1	340433455	0202285
10	TAILINGS AUGER DRIVE	1	340433430	0302220
11	FAN DRIVE VARIABLE SPEED	1	340433409	0102112
12	MAIN FAN	1	340433410	1902120
13		1	340433531	1103242
14	REEL DRIVE (1978)	1	340433316	1901283
14	REEL DRIVE	1	340433435	0302251
15		1	340433456	0302313
16		1	340433236	1901094
17	ROTARY FILTER DRIVE	1	340433134	1900089
18	FILTER	1	340433162	0200143

3350 (EX AL 112)

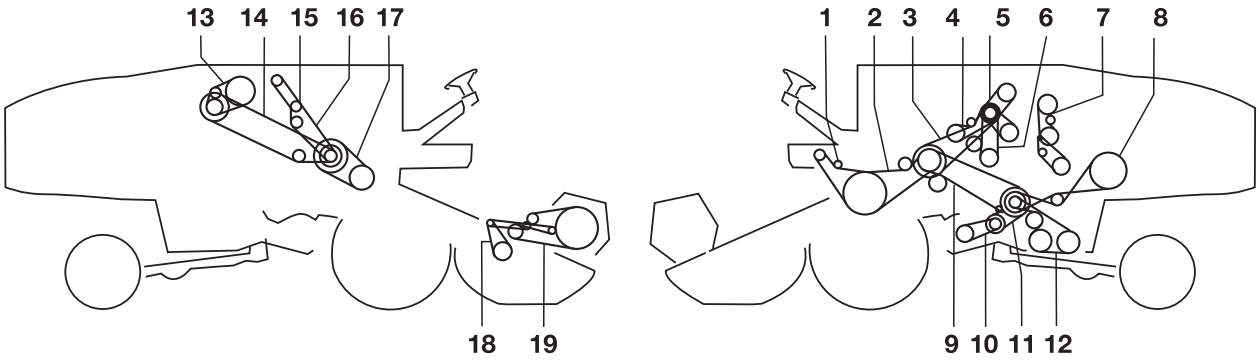

			OE	
1	BLOWER DRIVE	1	340433182	1900196
2	ELEVATOR DRIVE UNIT	1	340433531	1103242
3	THRESHING DRUM VARIATOR DRIVE	1	344311221	1424276
4	AUGER DRIVE	1	340433417	0102148
5	HYDRAULIC PUMP DRIVE	1	340432244	0401111
6	HYDRAULIC PUMP DRIVE	1	344311212	1924192
7	ELEVATOR DRIVE GRAIN	1	340433289	1901188
8	STRAW WALKER DRIVE	1	340433455	0202285
9	MAIN RETURN DRIVE	1	340433537	1903286
10	MAIN FAN (SECONDARY)	1	340433410	1902120
11	MAIN FAN (PRIMARY)	1	340433409	0102112
12	AUGER DRIVE TAILINGS AND GRAIN	1	340433430	0302220
13		1	340433236	1901094
14		1	340433456	0302313
15	ROTARY FILTER (SECONDARY)	1	340433134	1900089
16	ROTARY FILTER (PRIMARY)	1	340433162	0200143
17	FEEDER SHAFT	1	340435146	1913184
18	REEL DRIVE VARIABLE SPEED	1	340434140	1961209
19	REEL DRIVE	1	340433456	0302313

3400

			OE	
1	REVERSER	1	340433983	1904193
2	UPRIGHT AUGER	1	340437245	☎
3	THRESHING MECHANISM DRIVE	1	344311318	1925345 EE-TECH
4	TANK UNLOADING DRIVE	1	340433465	0102161
5	AIR CONDITIONED CAB INSTALLATION	1	340433129	0100083
6	TRANSMISSION	1	344311126	1923287 EE-TECH
7	CUTTING TABLE TRANSMISSION	1	344375135	☎
8	REAR BEATER TO DRIVE TRANSMISSION	1	340433539	1903342
9	DRIVE BELTS AND DRIVE CHAINS (LEFT-HAND)	2	340435130	0312284
10	STRAW WALKER DRIVE	1	340433316	1901283
11	AUGER DRIVES	1	340433446	0202348
12	RADIATOR FILTER TRANSMISSION	1	340433181	1900196
13	RADIATOR FILTER TRANSMISSION	1	340433134	1900089
14	DRUM VARIATOR	1	340435147	1913188
15	FAN VARIATOR	1	340435150	1910179
16	FAN VARIATOR	1	340435151	1410169
17	FAN DRIVE	1	340433191	0300243
18	SECONDARY CLEANER DRIVE	1	340433469	2602194

3400 R

			OE	
1	REVERSER	1	340433983	1904193
2	UPRIGHT AUGER	1	340437245	☎
3	THRESHING MECHANISM DRIVE	1	344311318	1925345 EE-TECH
4	TANK UNLOADING DRIVE	1	340433465	0102161
5	AIR CONDITIONED CAB INSTALLATION	1	340433129	0100083
6	TRANSMISSION	1	344311126	1923287 EE-TECH
7	CUTTING TABLE TRANSMISSION	1	344375135	☎
8	REAR BEATER TO DRIVE TRANSMISSION	1	340433539	1903342
9	DRIVE BELTS AND DRIVE CHAINS (LEFT-HAND)	2	340435130	0312284
10	STRAW WALKER DRIVE	1	340433316	1901283
11	AUGER DRIVE	1	340433446	0202348
12	RADIATOR FILTER TRANSMISSION	1	340433181	1900196
13	RADIATOR FILTER TRANSMISSION	1	340433134	1900089
14	DRUM VARIATOR	1	340435147	1913188
15	FAN VARIATOR	1	340435150	1910179
16	FAN VARIATOR	1	340435151	1410169
17	FAN DRIVE	1	340433191	0300243
18	SECONDARY CLEANER DRIVE	1	340433469	2602194

3450 (EX AL 132)

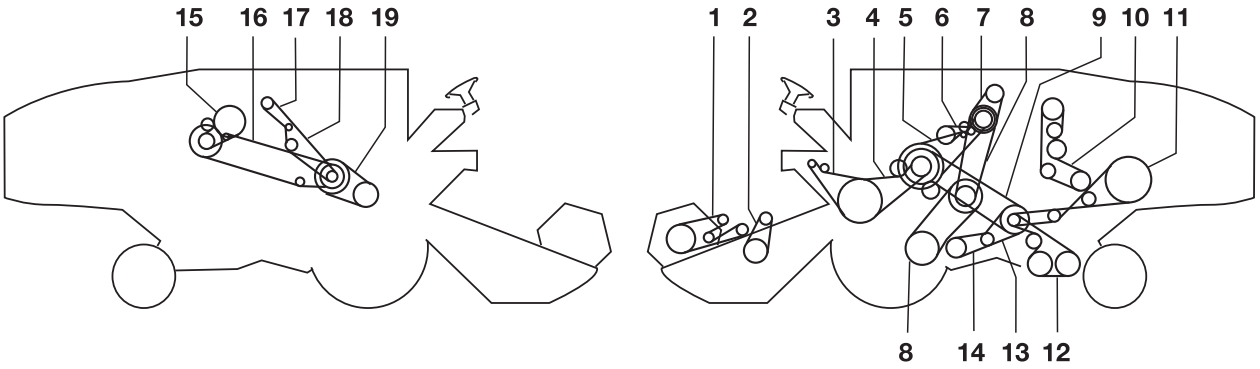

			OE	
1	REEL DRIVE (1978)	1	340433316	1901283
1	REEL DRIVE	1	340433435	0302251
2	REEL DRIVE VARIABLE SPEED	1	340434138	1960189
2	REEL DRIVE VARIABLE SPEED	1	340434140	1961209
3	BLOWER DRIVE	1	340433182	1900196
4		1	340433531	1103242
5	THRESHING DRUM VARIATOR DRIVE	1	344311221	1424276
5	THRESHING DRIVE (1978)	1	344311316	1925280
6	AUGER DRIVE	1	340433417	0102148
7	HYDRAULIC PUMP DRIVE	1	340432243	0201109
7	HYDRAULIC PUMP DRIVE	1	340432244	0401111
8	TRACTION VARI DRIVE	2	340435127	1912236
9	MAIN RETURN DRIVE	1	340433537	1903286
10	FAN DRIVE	1	340433289	1901188
11	STRAW WALKER DRIVE	1	340433455	0202285
12	AUGER DRIVE TAILINGS AND GRAIN	1	340433430	0302220
13	MAIN FAN (PRIMARY)	1	340433409	0102112
14	MAIN FAN (SECONDARY)	1	340433410	1902120
14	CONVERTER DRIVE	1	340433418	2002167
15	FEEDER SHAFT	1	340433236	1901094
16		1	340433456	0302313
17	ROTARY FILTER (SECONDARY)	1	340433134	1900089
18	ROTARY FILTER (PRIMARY)	1	340433162	0200143
19	CYLINDER DRIVE	1	344351146	0213186

3500 - 3500R - 3550 - 3550R

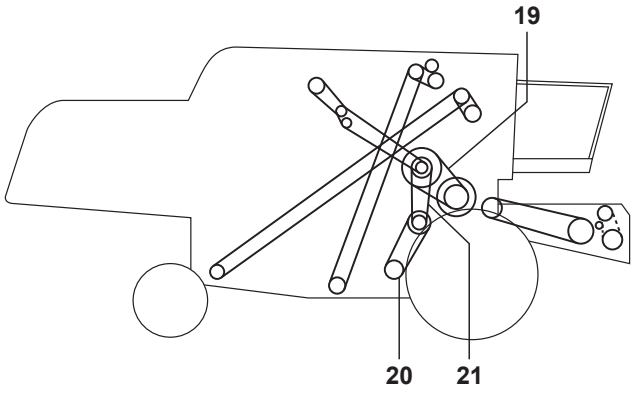

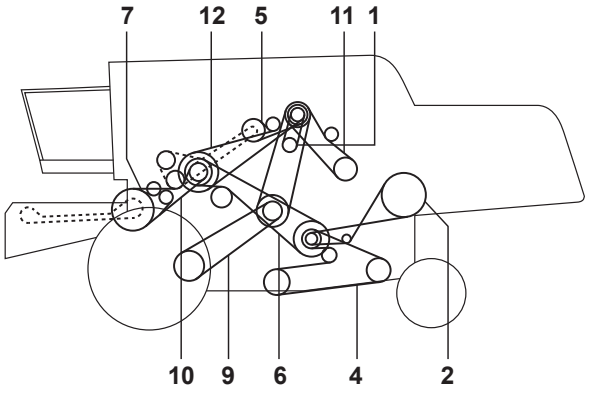

			OE	
1	COMPRESSOR	2	340433129	0100083
2	STRAW WALKER DRIVE	1	340433316	1901283
3	FAN DRIVE	1	340433422	0102183
4	GRAIN TAILINGS AUGER	1	340433446	0202348
5	AUGER DRIVE	1	340433465	0102161
6	RETURN DRIVE	1	340433539	1903342
7	RETURN ELEVATOR	1	340433983	1904193
8	REEL VARIATOR DRIVE	1	340434138	1960189
9	TRACTION VARI-DRIVE (MECHANIC)	2	340435130	0312284
10	FRONT ELEVATOR	1	344311126	1923287 EE-TECH
11	HYDROSTATIC TRACTION	1	344311217	0224236 EE-TECH
12		1	344311318	1925345 EE-TECH
13	ALTERNATOR	2	4796327	0173223
14	ALTERNATOR	1	340433041	0173223
15	ROTARY SCREEN DRIVE	1	340433137	1900078
16	ROTARY SCREEN DRIVE	1	340433181	1900196
17	ROTARY SCREEN DRIVE	1	340433182	1900196
18	RETURN FAN	2	340334417	☎
19	DRUM VARIATOR DRIVE	1	340435147	1913188
20	FAN	2	340435150	1910179
21	RETURN FAN	1	340435151	1410169

3550 AL

			OE	
1		1	340434138	1960189
2		1	340433129	0100083
3		1	340433134	1900089
4		1	340433181	1900196
5		1	340433191	0300243
6		1	340433250	1901115
7		1	340433983	1904193
8		1	340433316	1901283
9		1	344311126	1923287 EE-TECH
10		1	344311226	0224236 EE-TECH
11		1	344311318	1925345 EE-TECH
12		1	340433465	0102161
13		1	340433418	2002167
14		1	340433469	2602194
15	STRAW CHOPPER DRIVE	1	340433472	0102257
16		1	340433446	0202348
17	STRAW CHOPPER DRIVE	1	340433473	1902376
18		1	340435149	1903155
19		1	340433539	1903342
20		1	340435147	1913188

3560 AL

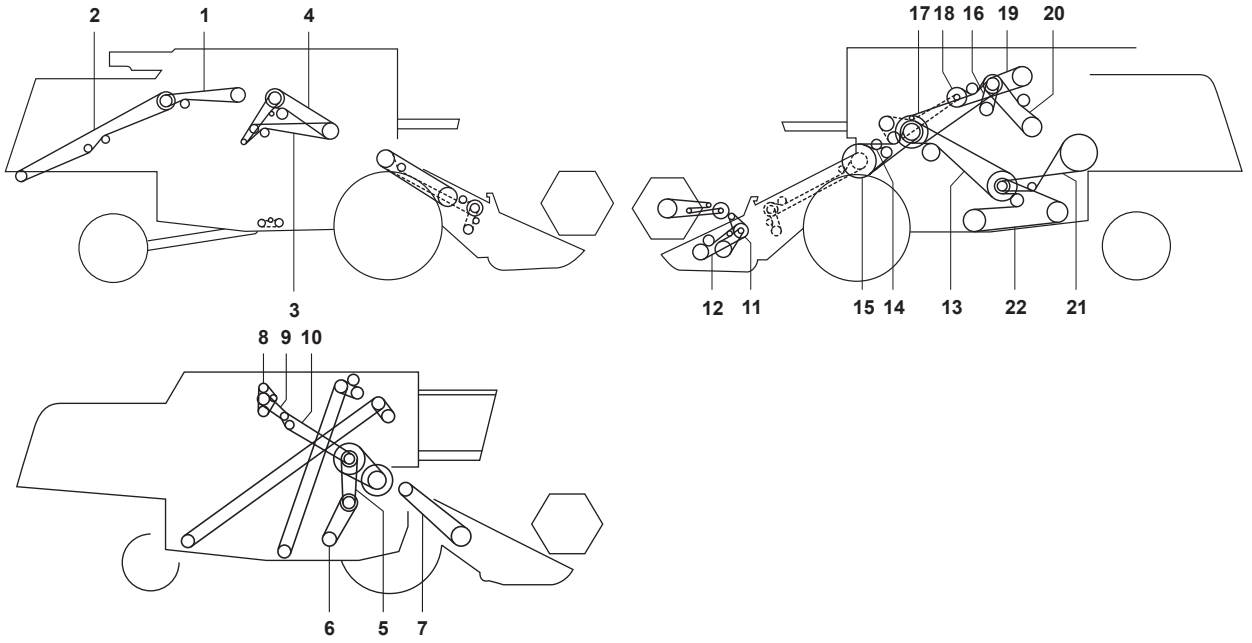

			OE	
1		1	344311129	1623297 EE-TECH
2		1	344311139	2623412
3		1	340433191	0300243
4		1	340433469	2602194
5		1	340435151	1410169
6		1	340435150	1910179
7		1	340435147	1913188
8		1	4796328	0173223
9		1	340433134	1900089
10		1	340433181	1900196
11		1	340434138	1960189
12		1	340433422	0102183
13		1	340433539	1903342
14		1	340433983	1904193
15		1	344311126	1923287 EE-TECH
16		1	340433129	0100083
17		1	344311318	1925345 EE-TECH
18		1	340433465	0102161
19		1	340433250	1901115
20		1	344311226	0224236 EE-TECH
21		1	340433316	1901283
22		1	340433446	0202348

3600

			OE	
1		1	344311127	1923287 EE-TECH
3	MAIN FAN	1	340433424	0202139
4	AUGER DRIVE TAILINGS AND GRAIN	1	344311134	1923369
5	STRAW WALKER DRIVE	1	340433458	0702292
6	HYDRAULIC PUMP DRIVE	1	344311217	0224236 EE-TECH
7	OIL PUMP DRIVE	1	340432243	0201109
8	COMPRESSOR DRIVE	1	340433129	0100083
9	AUGER DRIVE	1	340433467	0102161
10	RETURN DRIVE	1	340433540	1903346
11	CYLINDER VARIATOR DRIVE	1	344311318	1925345 EE-TECH
12	REEL DRIVE VARIABLE SPEED	1	340434138	1960189
13	CONVERTER DRIVE	1	340433418	2002167
14	ROTARY FILTER (SECONDARY)	1	340433138	1900095
15	ROTARY FILTER (PRIMARY)	1	340433189	0200219
16	CYLINDER DRIVE	1	340435152	1915192

3650

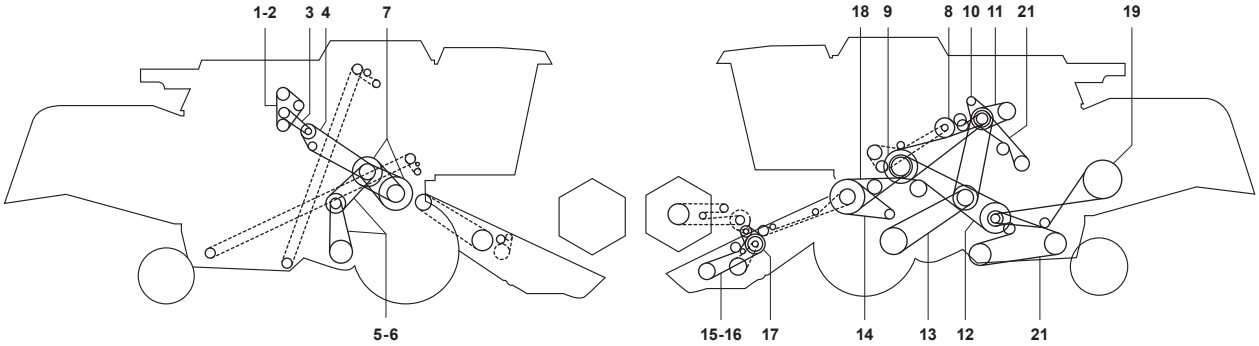

			OE	
1	ALTERNATOR DRIVE	1	4796327	0173223
2	ALTERNATOR DRIVE	1	340433041	0173223
3	ROTARY SCREEN DRIVE	1	340433138	1900095
4	ROTARY SCREEN DRIVE	1	340433190	1900213
5	RETURN FAN	1	340433424	0202139
6	RETURN FAN	1	340435150	1910179
7	DRUM VARI - DRIVE		340435152	1915192
8		1	340433475	0102163
9		1	344311318	1925345 EE-TECH
10	COMPRESSOR	1	340433129	0100083
11	HYDRAULIC PUMP DRIVE	1	340433250	1901115
12	RETURN DRIVE	1	340433539	1903342
13	TRACTION VARI - DRIVE	2	340435131	0312284
14		1	340433984	1904193
15	CONVERTER DRIVE	1	340433418	2002167
16	FAN DRIVE	1	340433422	0102183
17	REEL - VARI DRIVE	1	340434138	1960189
18	FRONT ELEVATOR	1	344311127	1923287 EE-TECH
19	STRAW WALKER DRIVE	1	340433457	0202361
20	GRAIN TAILINGS AUGER	1	344311134	1923369
21		1	344311226	0224236 EE-TECH

3650 R

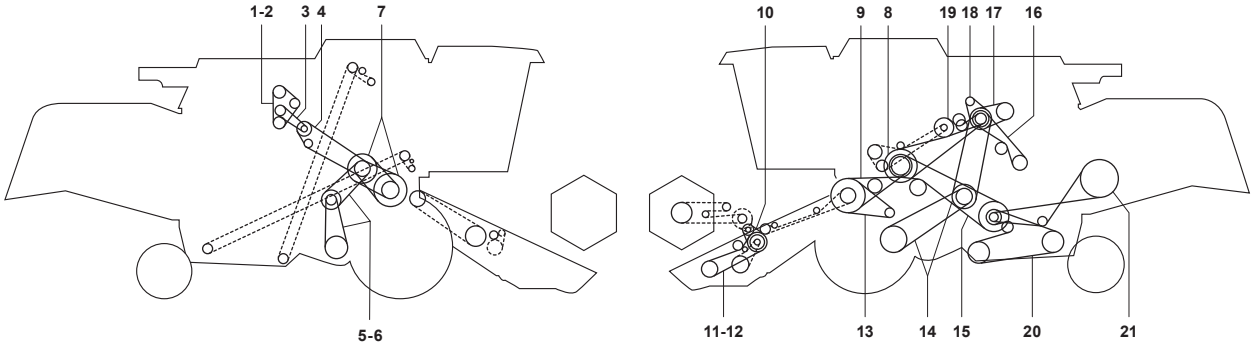

			OE	
1	ALTERNATOR DRIVE	1	4796327	0173223
2	ALTERNATOR DRIVE	1	340433041	0173223
3	ROTARY SCREEN DRIVE	1	340433138	1900095
4	ROTARY SCREEN DRIVE	1	340433190	1900213
5	RETURN FAN	1	340433424	0202139
6	RETURN FAN	1	340435150	1910179
7	DRUM VARI - DRIVE	1	340435152	1915192
8		1	344311318	1925345 EE-TECH
9	FRONT ELEVATOR	1	344311127	1923287 EE-TECH
10		1	340434158	☎
11	CONVERTER DRIVE	1	340433418	2002167
12	FAN DRIVE	1	340433422	0102183
13		1	340433984	1904193
14	TRACTION VARI - DRIVE	2	340435131	0312284
15	RETURN DRIVE	1	340433539	1903342
16		1	344311226	0224236 EE-TECH
17		1	340433250	1901115
18	COMPRESSOR	1	340433129	0100083
19		1	340433475	0102163
20	GRAIN TAILINGS AUGER	1	344311134	1923369
21	STRAW WALKER DRIVE	1	340433457	0202361

3700

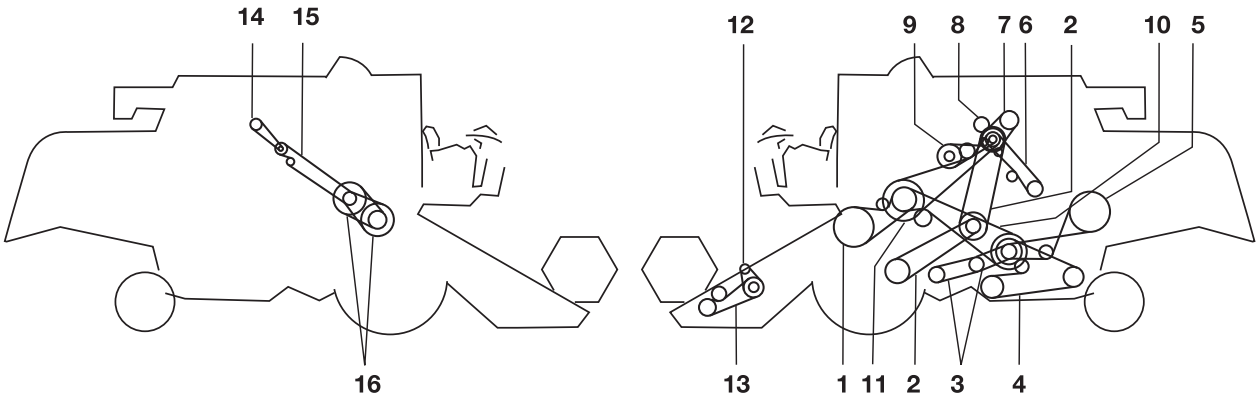

			OE	
1		1	344311127	1923287 EE-TECH
3	MAIN FAN	1	340433424	0202139
4	AUGER DRIVE TAILINGS AND GRAIN	1	344311134	1923369
5	STRAW WALKER DRIVE	1	340433458	0702292
6	HYDRAULIC PUMP DRIVE	1	344311217	0224236 EE-TECH
7	OIL PUMP DRIVE	1	340432243	0201109
8	COMPRESSOR DRIVE	1	340433129	0100083
9	AUGER DRIVE	1	340433467	0102161
10	RETURN DRIVE	1	340433540	1903346
11	CYLINDER VARIATOR DRIVE	1	344311318	1925345 EE-TECH
12	REEL DRIVE VARIABLE SPEED	1	340434138	1960189
13	CONVERTER DRIVE	1	340433418	2002167
14	ROTARY FILTER (SECONDARY)	1	340433144	1900106
15	ROTARY FILTER (PRIMARY)	1	340433184	0300202

3750

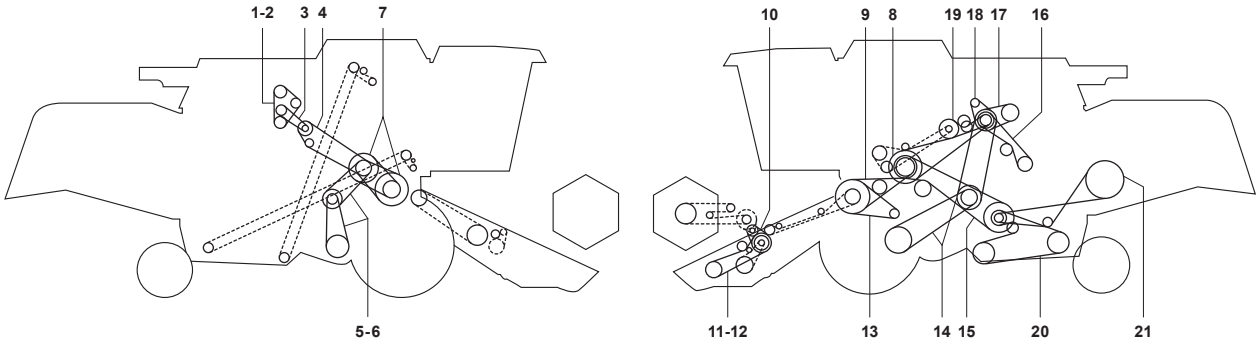

			OE	
1	ALTERNATOR	1	4796327	0173223
2	ALTERNATOR	1	340433041	0173223
3	ROTARY SCREEN DRIVE	1	340433138	1900095
4	ROTARY SCREEN DRIVE	1	340433190	1900213
5	RETURN FAN	1	340433424	0202139
6	FAN	1	340435150	1910179
7	DRUM VARI - DRIVE	1	340435152	1915192
8		1	344311318	1925345 EE-TECH
9	FRONT ELEVATOR	1	344311127	1923287 EE-TECH
10		1	340434158	☎
11	CONVERTER DRIVE	1	340433418	2002167
12	FAN DRIVE	1	340433422	0102183
13		1	340433984	1904193
14	TRACTION VARI - DRIVE	2	340435131	0312284
15	RETURN DRIVE	1	340433539	1903342
16		1	344311226	0224236 EE-TECH
17		1	340433250	1901115
18	COMPRESSOR	1	340433129	0100083
19		1	340433475	0102163
20	GRAIN TAILINGS AUGER	1	344311134	1923369
21	STRAW WALKER DRIVE	1	340433457	0202361

3750 R

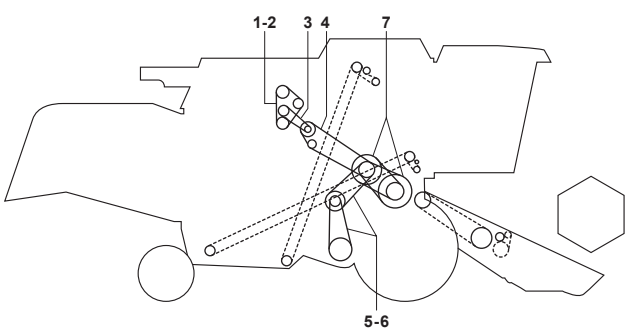

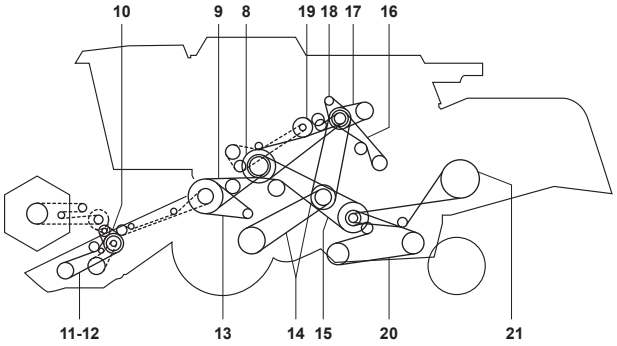

			OE	
1	ALTERNATOR	1	4796327	0173223
2	ALTERNATOR	1	340433041	0173223
3	ROTARY SCREEN DRIVE	1	340433138	1900095
4	ROTARY SCREEN DRIVE	1	340433190	1900213
5	RETURN FAN	1	340433424	0202139
6	FAN	1	340435150	1910179
7	DRUM VARI - DRIVE	1	340435152	1915192
8		1	344311318	1925345 EE-TECH
9	FRONT ELEVATOR	1	344311127	1923287 EE-TECH
10		1	340434158	☎
11	CONVERTER DRIVE	1	340433418	2002167
12	FAN DRIVE	1	340433422	0102183
13		1	340433984	1904193
14	TRACTION VARI - DRIVE	2	340435131	0312284
15	RETURN DRIVE	1	340433539	1903342
16		1	344311226	0224236 EE-TECH
17		1	340433250	1901115
18	COMPRESSOR	1	340433129	0100083
19		1	340433475	0102163
20	GRAIN TAILINGS AUGER	1	344311134	1923369
21	STRAW WALKER DRIVE	1	340433457	0202361

3790

			OE	
1	REEL DRIVE VARIABLE SPEED	1	340434138	1960189
2	COMPRESSOR DRIVE	1	340433129	0100083
3	ROTARY FILTER (SECONDARY)	1	340433144	1900106
4	ROTARY FILTER (PRIMARY)	1	340433192	0300206
5	OIL PUMP DRIVE	1	340432246	0401111
6		1	340433983	1904193
7		1	344311127	1923287 EE-TECH
8	AUGER DRIVE TAILINGS AND GRAIN	1	344311134	1923369
9	STRAW CHOPPER DRIVE	1	344311137	1923387 EE-TECH
10	HYDRAULIC PUMP DRIVE	1	344311226	0224236 EE-TECH
11	CYLINDER DRIVE	1	344311318	1925345 EE-TECH
12	AUGER DRIVE	1	340433467	0102161
13	CONVERTER DRIVE	1	340433422	0102183
14	FAN (SECONDARY) 2.	1	340432433	0202235
15	FAN (PRIMARY) 2.	1	340433456	0302313
16	STRAW WALKER DRIVE	1	340433457	0202361
17	RETURN DRIVE	1	340433539	1903342
18	MAIN FAN	1	340435150	1910179

3850

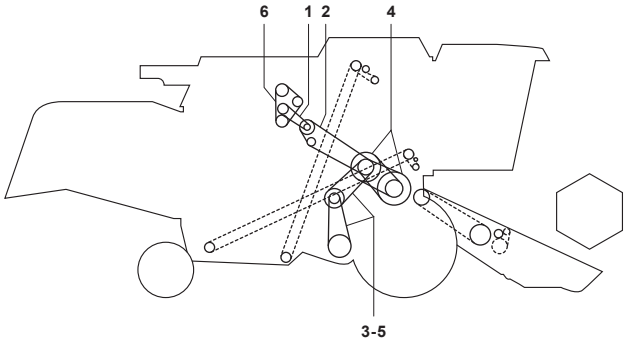

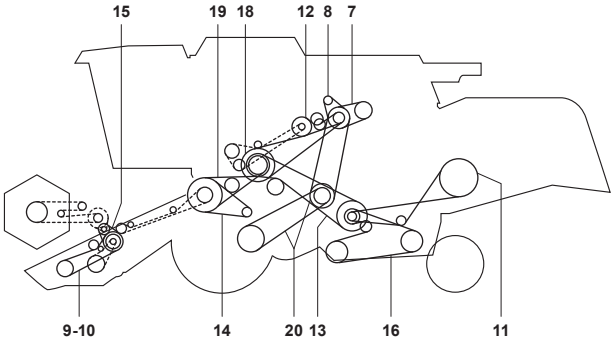

			OE	
1	ROTARY SCREEN DRIVE	1	340433138	1900095
2	ROTARY SCREEN DRIVE	1	340433190	1900213
3	RETURN FAN	1	340433424	0202139
4	DRUM VARI - DRIVE	2	340435124	1912180
5	FAN	1	340435150	1910179
6	THANK YOU GATES	2	8109714	1472238
7	HYDROSTATIC DRIVE	1	340432246	0401111
8	COMPRESSOR	1	340433129	0100083
9	CONVERTER DRIVE	1	340433418	2002167
10	FAN DRIVE	1	340433422	0102183
11	STRAW WALKER DRIVE	1	340433457	0202361
12	AUGER DRIVE	1	340433467	0102161
13	RETURN DRIVE	1	340433539	1903342
14	RETURN ELEVATOR	1	340433983	1904193
15	REEL VARI - DRIVE	1	340434138	1960189
16	GRAIN TAILINGS AUGER	1	344311134	1923369
17		1	344311226	0224236 EE-TECH
18		1	344311318	1925345 EE-TECH
19	STRAW ELEVATOR DRIVE	1	344312127	1927295
20		2	340435131	0312284

3850 R

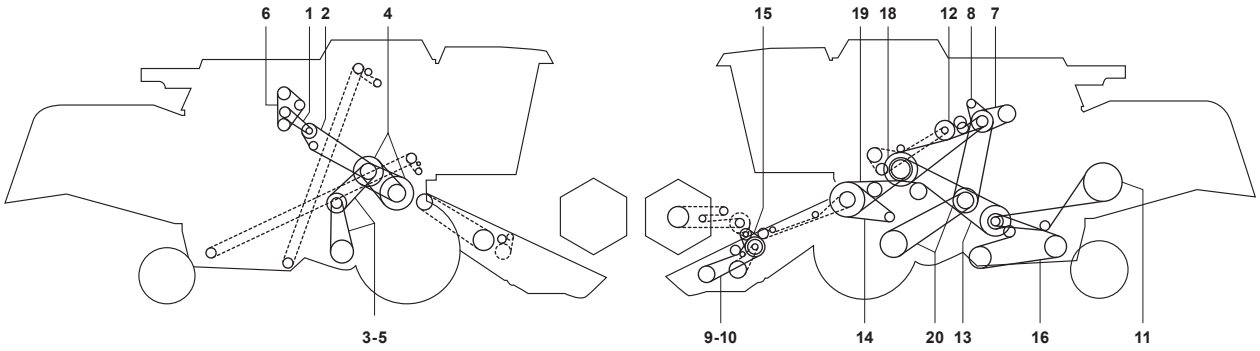

			OE	
1	ROTARY SCREEN DRIVE	1	340433138	1900095
2	ROTARY SCREEN DRIVE	1	340433190	1900213
3	RETURN FAN	1	340433424	0202139
4	DRUM VARI - DRIVE	2	340435124	1912180
5	FAN	1	340435150	1910179
6		1	8109714	1472238
7	HYDROSTATIC DRIVE	1	340432246	0401111
8	COMPRESSOR	1	340433129	0100083
9	CONVERTER DRIVE	1	340433418	2002167
10	FAN DRIVE	1	340433422	0102183
11	STRAW WALKER DRIVE	1	340433457	0202361
12	AUGER DRIVE	1	340433467	0102161
13	RETURN DRIVE	1	340433539	1903342
14	RETURN ELEVATOR	1	340433983	1904193
15	REEL VARI - DRIVE	1	340434138	1960189
16	GRAIN TAILINGS AUGER	1	344311134	1923369
17		1	344311226	0224236 EE-TECH
18		1	344311318	1925345 EE-TECH
19	STRAW ELEVATOR DRIVE	1	344312127	1927295
20		2	340435131	0312284

3890

			OE	
1	REEL DRIVE VARIABLE SPEED	1	340434138	1960189
2	COMPRESSOR DRIVE	1	340433129	0100083
3	ROTARY FILTER (SECONDARY)	1	340433149	1900113
4	ROTARY FILTER (PRIMARY)	1	340433190	1900213
5	OIL PUMP DRIVE	1	340432246	0401111
6		1	340433983	1904193
7	AUGER DRIVE TAILINGS AND GRAIN	1	344311134	1923369
8	STRAW CHOPPER DRIVE	1	344311137	1923387 EE-TECH
9	HYDRAULIC PUMP DRIVE	1	344311226	0224236 EE-TECH
10	CYLINDER VARIATOR DRIVE	1	344311318	1925345 EE-TECH
11	ENGINE FAN DRIVE	1	340433243	0201102
12	AUGER DRIVE	1	340433467	0102161
13	CONVERTER (C)	1	340433418	2002167
14	CONVERTER (E)	1	340433422	0102183
15	STRAW WALKER DRIVE	1	340433457	0202361
16	STRAW ELEVATOR DRIVE	1	344312127	1927295
17	RETURN DRIVE	1	340433539	1903342
18	MAIN FAN	1	340435150	1910179

3900

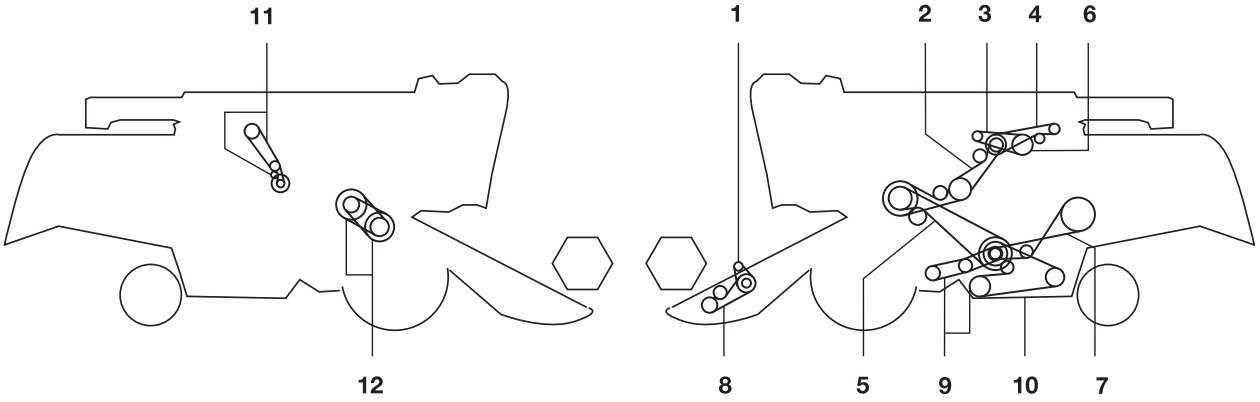

			OE	
1	REEL DRIVE VARIABLE SPEED	1	340434138	1960189
2	CYLINDER DRIVE	1	344311418	1926435 EE-TECH
3	COMPRESSOR DRIVE	1	340433038	1983247
4	HYDRAULIC PUMP DRIVE	1	344311314	1425237
5	RETURN DRIVE	1	340433540	1903346
6	OIL PUMP DRIVE	1	340433256	1401127
7	STRAW WALKER DRIVE	1	340433457	0202361
8	CONVERTER DRIVE	1	340433418	2002167
9	MAIN FAN	1	340433424	0202139
10	AUGER DRIVE TAILINGS AND GRAIN	1	344311134	1923369
11	ROTARY FILTER DRIVE	1	340433143	0400100

L 411 - L413 - L416 - L516

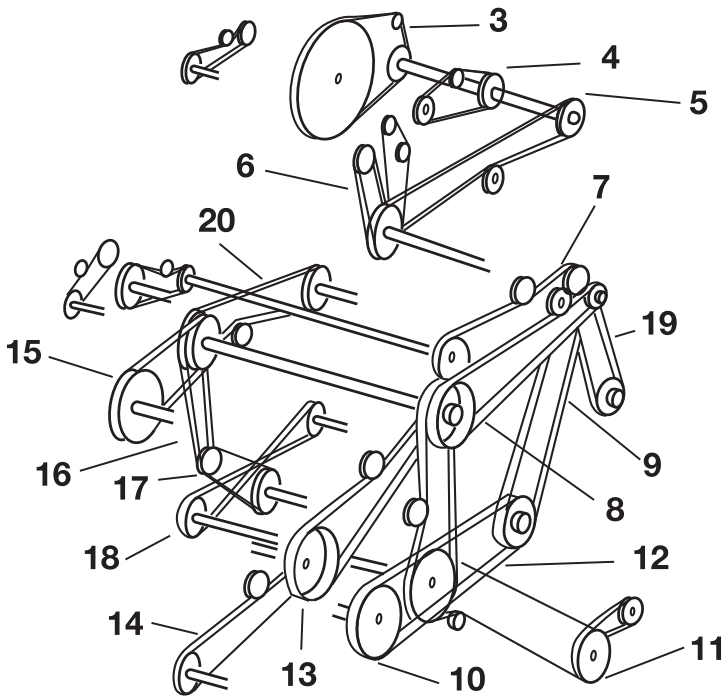

			OE	
0	WATER PUMP - ALTERNATOR - ENG. (WO AIR CO)	1	84005860	0384324
3	ROTARY DUST SCREEN	1	89514310	0300202
4	RADIATOR FAN (FOR L411 ONLY)	1	89831515	0172253
4	RADIATOR FAN (FOR L413-L416-L516)	1	89818704	0372255
5	ENGINE	1	89818705	0372271
7	INTERMEDIATE SHAFT - ENGINE	1	89838606	0102216
8	BEATERSHAFT - MAIN DRIVE	1	89817374	1524314 EE-TECH
11	GRAIN AUGER	1	80422731	0302248
12	BEATER SHAFT - ECCENTRIC SHAFT	1	80387469	0302251
13	STRAW ELEVATOR - BEATER SHAFT	2	80066232	2602244
13	STRAW ELEVATOR - BEATER SHAFT	1	80424563	0327292
14	HEADER DRIVER	1	89835120	0327381
14	HEADER DRIVER	1	89839375	0202332
15	DRUM - BEATER SHAFT	1	80336784	0313181
16	BEATER SHAFT	1	89515075	0310193
17	FAN	1	89515076	0310157
18	STRAW WALKERS - ECCENTRIC SHAFT	1	80431784	0301217
19	HYDROSTATIC PUMP	1	89818873	0325248
20	ROTARY SEPARATOR	1	89837412	1602150

L 517

			OE	
1	POST CYLINDER VARIATOR DRIVE	1	344311318	1925345 EE-TECH
2	STRAW ELEVATOR DRIVE	1	344311127	1923287 EE-TECH
2	STRAW ELEVATOR DRIVE	1	344312128	1927295
3	AUGER DRIVE TAILINGS AND GRAIN	1	344311123	1923257 EE-TECH
4	FAN RETURN DRIVE	1	340433539	1903342
5	STRAW ELEVATOR DRIVE	1	340433474	1902354
6	DISCHARGE DRIVE GRAIN TANK	1	340433475	0102163
7	ROTARY FILTER DRIVE	1	340433181	1900196
8	CYLINDER VARIATOR DRIVE	1	340435152	1915192
9	FAN DRIVE	1	340435150	1910179
11	CENTRAL RETURN DRIVE	1	340433984	1904193
12	REEL DRIVE VARIABLE SPEED	1	340434138	1960189
13		1	340433422	0102183
14	COMPRESSOR DRIVE	1	340433131	0200085
16		1	340433260	0301131
17		1	340433270	2001146
18	CHOPPER DRIVE	1	344311130	1923309 EE-TECH
19	CHOPPER DRIVE	1	344311151	1923499
21		1	344311228	1924209
24	FAN DRIVE	1	340433405K	0302134
36	FAN DRIVE	1	340433159	0200134
38	FAN DRIVE	1	340435153	0203187

L 518

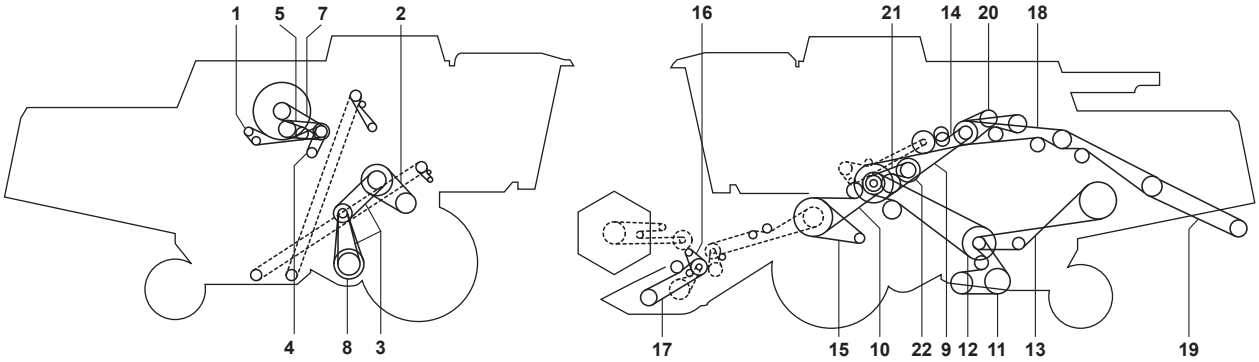

			OE	
1		1	340433179	1943273
2		1	340435152	1915192
3		2	340435150	1910179
4	DRIVE VARIATOR FRAME	1	340433132	0172217
5		1	340433260	0301131
6		1	340433270	2001146
7		1	340433268	1401145
8	FAN DRIVE	1	340435153	0203187
9	POST CYLINDER VARIATOR DRIVE	1	344311318	1925345 EE-TECH
10	STRAW ELEVATOR DRIVE	1	344312128	1927295
11	AUGER DRIVE TAILINGS AND GRAIN	1	344311123	1923257 EE-TECH
12	FAN RETURN DRIVE	1	340433539	1903342
13	STRAW ELEVATOR DRIVE	1	340433474	1902354
14	DISCHARGE DRIVE GRAIN TANK	1	340433475	0102163
15		1	340433984	1904193
16		1	340434138	1960189
17		1	340433422	0102183
18	CHOPPER DRIVE	1	344311130	1923309 EE-TECH
19	CHOPPER DRIVE	1	344311151	1923499
20	PUMP DRIVE	1	344311228	1924209
21	FAN DRIVE	1	340433405	0302134
22	FAN DRIVE	1	340433159	0200134

L 520

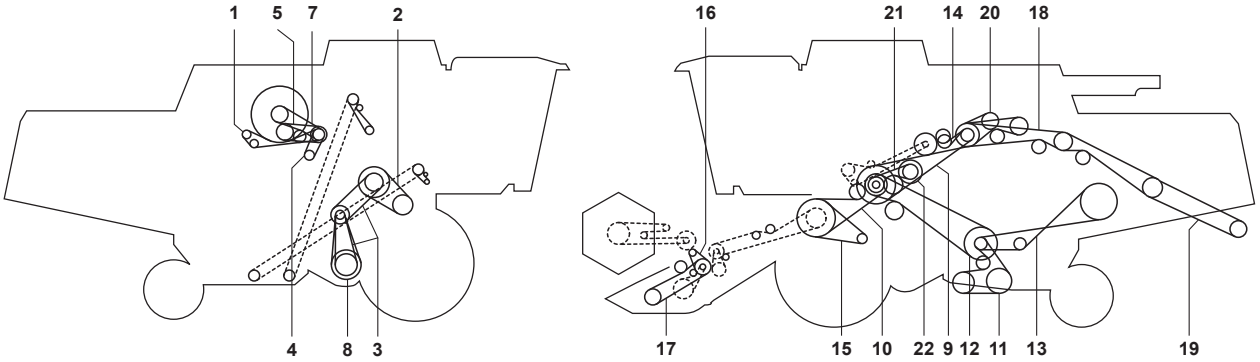

			OE	
1		1	340433179	1943273
2		1	340435152	1915192
3		2	340435150	1910179
4	DRIVE VARIATOR FRAME	1	340433132	0172217
5		1	340433260	0301131
6		1	340433270	2001146
7		1	340433268	1401145
8	FAN DRIVE	1	340435153	0203187
9	POST CYLINDER VARIATOR DRIVE	1	344311318	1925345 EE-TECH
10	STRAW ELEVATOR DRIVE	1	344312128	1927295
11	AUGER DRIVE TAILINGS AND GRAIN	1	344311123	1923257 EE-TECH
12	FAN RETURN DRIVE	1	340433539	1903342
13	STRAW ELEVATOR DRIVE	1	340433474	1902354
14	DISCHARGE DRIVE GRAIN TANK	1	340433475	0102163
15		1	340433984	1904193
16		1	340434138	1960189
17		1	340433422	0102183
18	CHOPPER DRIVE	1	344311130	1923309 EE-TECH
19	CHOPPER DRIVE	1	344311151	1923499
20	PUMP DRIVE	1	344311228	1924209
21	FAN DRIVE	1	340433405	0302134
22	FAN DRIVE	1	340433159	0200134

L 521

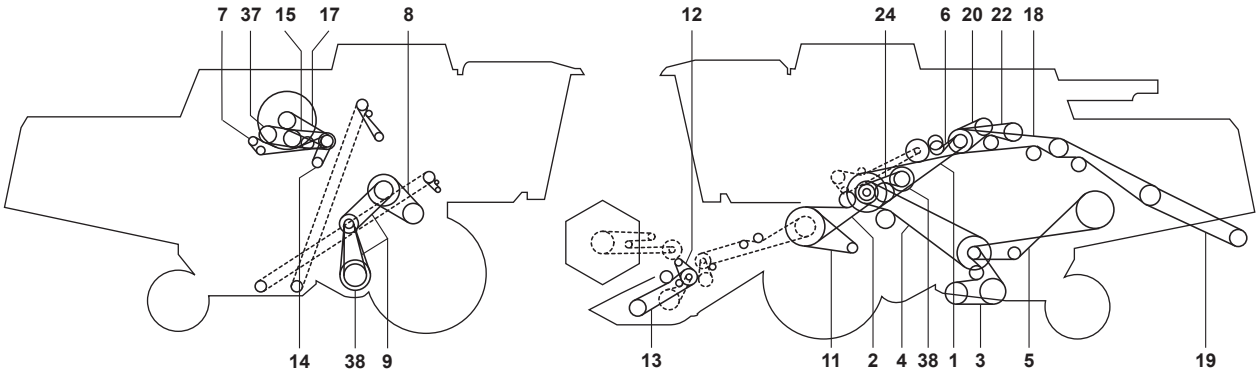

			OE	
1	POST CYLINDER VARIATOR DRIVE	1	344311318	1925345 EE-TECH
2	STRAW ELEVATOR DRIVE	1	344311127	1923287 EE-TECH
2	STRAW ELEVATOR DRIVE	1	344312128	1927295
3	AUGER DRIVE TAILINGS AND GRAIN	1	344311123	1923257 EE-TECH
4	FAN RETURN DRIVE	1	340433539	1903342
5	STRAW ELEVATOR DRIVE	1	340433474	1902354
6	DISCHARGE DRIVE GRAIN TANK	1	340433475	0102163
7	ROTARY FILTER	1	340433984	1904193
8	CYLINDER VARIATOR DRIVE	1	340434138	1960189
9	FAN	1	340433422	0102183
11	CENTRAL RETURN DRIVE	1	344311130	1923309 EE-TECH
12	REEL DRIVE VARIABLE SPEED	1	344311151	1923499
13		1	340433151	0200118
14	COMPRESSOR DRIVE	1	340433253	1601120
15		1	344311240	0324211
17		1	340433405	0302134
18	CHOPPER DRIVE	1	340433159	0200134
19	CHOPPER DRIVE	1	340433181	1900196
20	HYDRAULIC PUMP DRIVE	1	340435152	1915192
20	HYDRAULIC PUMP DRIVE	2	340435150	1910179
22	HYDRAULIC PUMP DRIVE	1	340433131	0200085
24	FAN	1	340433262	1901133
36	FAN	1	340433270	2001146
37	PUMP DRIVE	1	340433152	0200110
37	PUMP DRIVE	1	340433259	0201112
38	FAN DRIVE	1	340435153	0203187

L 523 - INTEGRALE

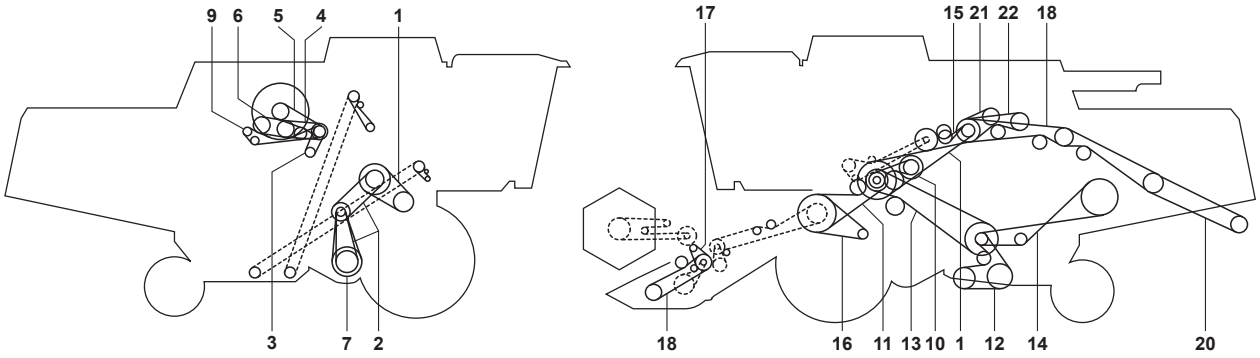

			OE	
1	CYLINDER VARIATOR DRIVE	1	340435152	1915192
2	FAN DRIVE	2	340435150	1910179
3		1	340433132	0172217
4		1	340433262	1901133
5		1	340433270	2001146
6	HYDRAULIC PUMP DRIVE	1	340433259	0201112
7	FAN DRIVE	1	340435153	0203187
8		1	340433268	1401145
9		1	340433179	1943273
10	POST CYLINDER VARIATOR DRIVE	1	344311318	1925345 EE-TECH
11	STRAW ELEVATOR DRIVE	1	344312128	1927295
12	AUGER DRIVE TAILINGS AND GRAIN	1	344311123	1923257 EE-TECH
13	FAN RETURN DRIVE	1	340433539	1903342
14	STRAW ELEVATOR DRIVE	1	340433474	1902354
15	DISCHARGE DRIVE GRAIN TANK	1	340433475	0102163
16	CENTRAL RETURN DRIVE	1	340433984	1904193
17	REEL DRIVE VARIABLE SPEED	1	340434138	1960189
18		1	340433422	0102183
19	CHOPPER DRIVE	1	344311130	1923309 EE-TECH
20	CHOPPER DRIVE	1	344311151	1923499
21		1	340433253	1601120
22	HYDRAULIC PUMP DRIVE	1	344311240	0324211
23	FAN DRIVE	1	340433159	0200134

L 523 - MCS

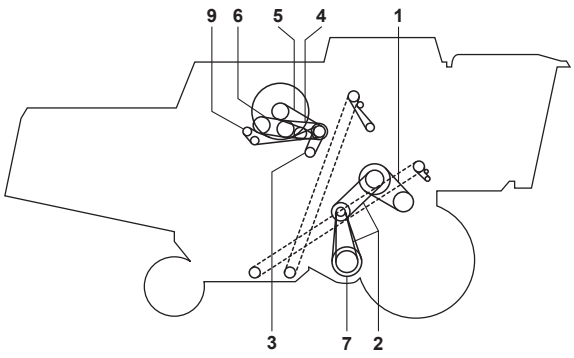

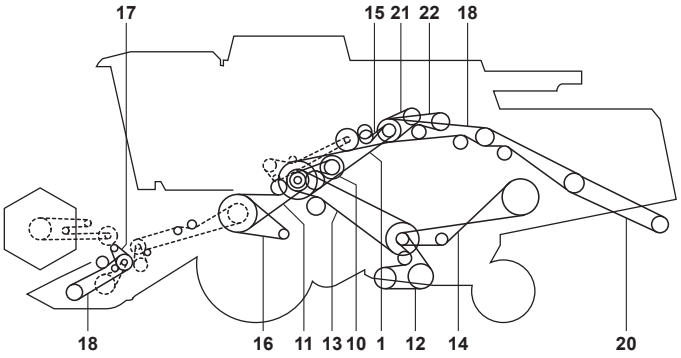

			OE	
1	CYLINDER VARIATOR DRIVE	1	340435152	1915192
2	FAN DRIVE	2	340435150	1910179
3		1	340433132	0172217
4		1	340433262	1901133
5		1	340433270	2001146
6	HYDRAULIC PUMP DRIVE	1	340433259	0201112
7	FAN DRIVE	1	340435153	0203187
8		1	340433268	1401145
9		1	340433179	1943273
10	POST CYLINDER VARIATOR DRIVE	1	344311318	1925345 EE-TECH
11	STRAW ELEVATOR DRIVE	1	344312128	1927295
12	AUGER DRIVE TAILINGS AND GRAIN	1	344311123	1923257 EE-TECH
13	FAN RETURN DRIVE	1	340433539	1903342
14	STRAW ELEVATOR DRIVE	1	340433474	1902354
15	DISCHARGE DRIVE GRAIN TANK	1	340433475	0102163
16	CENTRAL RETURN DRIVE	1	340433984	1904193
17	REEL DRIVE VARIABLE SPEED	1	340434138	1960189
18		1	340433422	0102183
19	CHOPPER DRIVE	1	344311130	1923309 EE-TECH
20	CHOPPER DRIVE	1	344311151	1923499
21		1	340433253	1601120
22	HYDRAULIC PUMP DRIVE	1	344311240	0324211
23	FAN DRIVE	1	340433405	0302134
24	FAN DRIVE	1	340433159	0200134

L 524

			OE	
1	POST CYLINDER VARIATOR DRIVE	1	344311318	1925345 EE-TECH
2	STRAW ELEVATOR DRIVE	1	344311127	1923287 EE-TECH
2	STRAW ELEVATOR DRIVE	1	344312128	1927295
3	AUGER DRIVE TAILINGS AND GRAIN	1	344311123	1923257 EE-TECH
4	FAN RETURN DRIVE	1	340433539	1903342
5	STRAW WALKER DRIVE	1	340433474	1902354
6	DISCHARGE DRIVE GRAIN TANK	1	340433475	0102163
7	ROTARY FILTER DRIVE	1	340433152	0200110
8	CYLINDER VARIATOR DRIVE	1	340435152	1915192
9	FAN DRIVE	1	340435150	1910179
11	CENTRAL RETURN DRIVE	1	340433984	1904193
12	REEL DRIVE VARIABLE SPEED	1	340434138	1960189
13		1	340433422	0102183
14	COMPRESSOR DRIVE	1	340433131	0200085
15		1	340433262	1901133
17		1	340433270	2001146
18	CHOPPER DRIVE	1	344311130	1923309 EE-TECH
19	CHOPPER DRIVE	1	344311151	1923499
20		1	340433151	0200118
20		1	340433253	1601120
22	HYDRAULIC PUMP DRIVE	1	344311240	0324211
24	FAN DRIVE	1	340433405K	0302134
36	FAN DRIVE	1	340433159	0200134
37	HYDRAULIC PUMP DRIVE	1	340433259	0201112
38	FAN DRIVE	1	340435153	0203187

L 525 - INTEGRALE

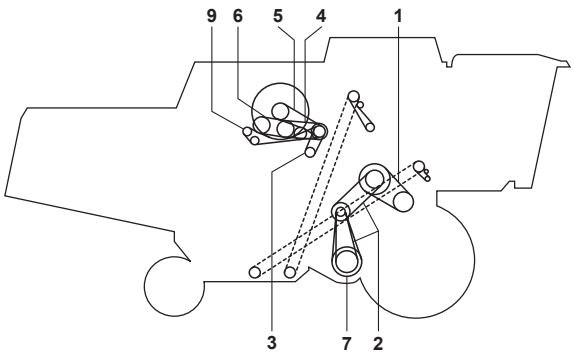

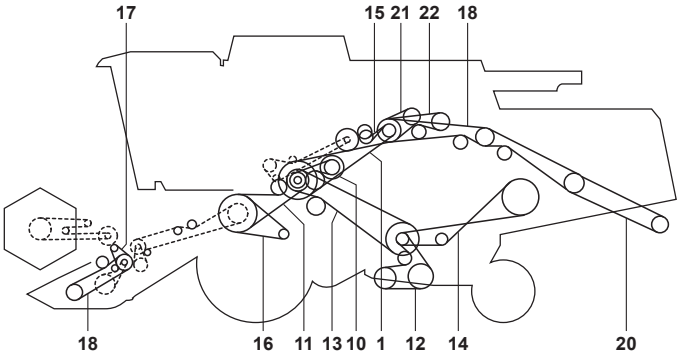

			OE	
1	ROTARY FILTER DRIVE	1	340435152	1915192
2	FAN DRIVE	2	340435150	1910179
3		1	340433132	0172217
4		1	340433262	1901133
5		1	340433270	2001146
6	HYDRAULIC PUMP DRIVE	1	340433259	0201112
7	FAN DRIVE	1	340435153	0203187
8		1	340433268	1401145
9		1	340433179	1943273
10	POST CYLINDER VARIATOR DRIVE	1	344311318	1925345 EE-TECH
11	STRAW ELEVATOR DRIVE	1	344312128	1927295
12	AUGER DRIVE TAILINGS AND GRAIN	1	344311123	1923257 EE-TECH
13	FAN RETURN DRIVE	1	340433539	1903342
14	STRAW WALKER DRIVE	1	340433474	1902354
15	DISCHARGE DRIVE GRAIN TANK	1	340433475	0102163
16	CENTRAL RETURN DRIVE	1	340433984	1904193
17	REEL DRIVE VARIABLE SPEED	1	340434138	1960189
18		1	340433422	0102183
19	CHOPPER DRIVE	1	344311130	1923309 EE-TECH
20	CHOPPER DRIVE	1	344311151	1923499
21		1	340433253	1601120
22	HYDRAULIC PUMP DRIVE	1	344311240	0324211
23	FAN DRIVE	1	340433405	0302134
24	FAN DRIVE	1	340433159	0200134

L 525 - MCS

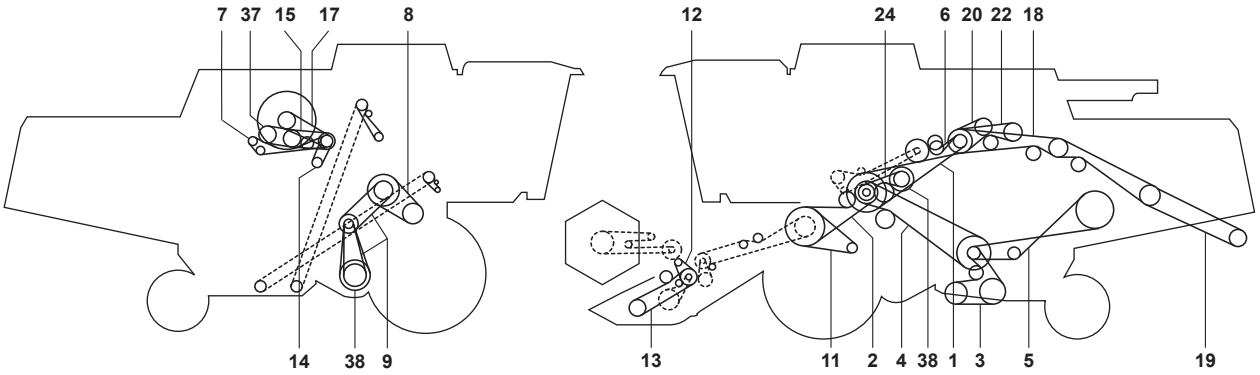

			OE	
1	POST CYLINDER VARIATOR DRIVE	1	344311318	1925345 EE-TECH
2	STRAW ELEVATOR DRIVE	1	344312128	1927295
3	AUGER DRIVE TAILINGS AND GRAIN	1	344311123	1923257 EE-TECH
4	FAN RETURN DRIVE	1	340433539	1903342
5	STRAW WALKER DRIVE	1	340433474	1902354
6	DISCHARGE DRIVE GRAIN TANK	1	340433475	0102163
7		1	340433179	1943273
8	ROTARY FILTER DRIVE	1	340435152	1915192
9	FAN DRIVE	2	340435150	1910179
11	CENTRAL RETURN DRIVE	1	340433984	1904193
12	REEL DRIVE VARIABLE SPEED	1	340434138	1960189
13		1	340433422	0102183
14		1	340433132	0172217
15		1	340433262	1901133
17		1	340433270	2001146
18	CHOPPER DRIVE	1	344311130	1923309 EE-TECH
19	CHOPPER DRIVE	1	344311151	1923499
20		1	340433253	1601120
22	HYDRAULIC PUMP DRIVE	1	344311240	0324211
24	FAN DRIVE	1	340433405	0302134
36	FAN DRIVE	1	340433159	0200134
37	HYDRAULIC PUMP DRIVE	1	340433259	0201112
38	FAN DRIVE	1	340435153	0203187

L 624

			OE	
1	POST CYLINDER VARIATOR DRIVE	1	344311318	1925345 EE-TECH
2	STRAW ELEVATOR DRIVE	1	344311127	1923287 EE-TECH
2	STRAW ELEVATOR DRIVE	1	344312128	1927295
3	AUGER DRIVE TAILINGS AND GRAIN	1	344311123	1923257 EE-TECH
4	FAN RETURN DRIVE	1	340433539	1903342
5	STRAW ELEVATOR DRIVE	1	340433474	1902354
6	DISCHARGE DRIVE GRAIN TANK	1	340433475	0102163
7	ROTARY FILTER DRIVE	1	340433181	1900196
9	FAN DRIVE	1	340435150	1910179
11	CENTRAL RETURN DRIVE	1	340433984	1904193
12	REEL DRIVE VARIABLE SPEED	1	340434138	1960189
13		1	340433422	0102183
14	COMPRESSOR DRIVE	1	340433131	0200085
15		1	340433262	1901133
17		1	340433270	2001146
18	CHOPPER DRIVE	1	344311130	1923309 EE-TECH
19	CHOPPER DRIVE	1	344311151	1923499
20		1	340433151	0200118
20		1	340433253	1601120
22	HYDRAULIC PUMP DRIVE	1	344311240	0324211
24	FAN DRIVE	1	340433405K	0302134
36	FAN DRIVE	1	340433159	0200134
37		1	340433259	0201112
38		1	340435153	0203187

L 625

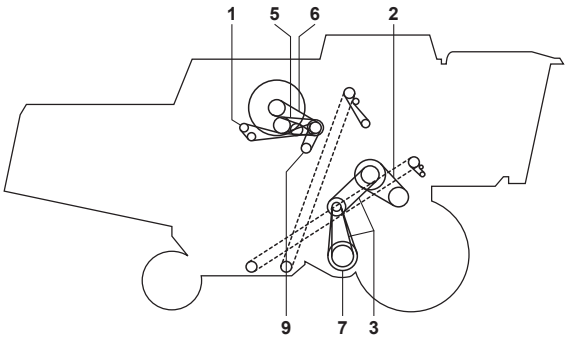

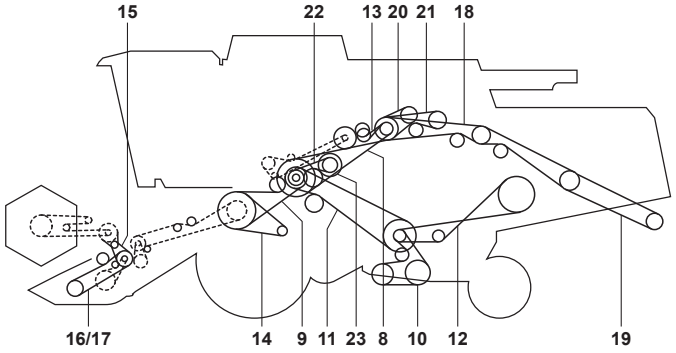

			OE	
1		1	340433179	1943273
2		2	340435124	1912180
3	FAN DRIVE	2	340435150	1910179
4		1	340433132	0172217
5		1	340433262	1901133
6		1	340433268	1401145
7		1	340435153	0203187
8	POST CYLINDER VARIATOR DRIVE	1	344311318	1925345 EE-TECH
9	STRAW ELEVATOR DRIVE	1	344312128	1927295
10	AUGER DRIVE TAILINGS AND GRAIN	1	344311123	1923257 EE-TECH
11	FAN RETURN DRIVE	1	340433539	1903342
12	STRAW ELEVATOR DRIVE	1	340433474	1902354
13	DISCHARGE DRIVE GRAIN TANK	1	340433475	0102163
14	CENTRAL RETURN DRIVE	1	340433984	1904193
15	REEL DRIVE VARIABLE SPEED	1	340434138	1960189
16		1	340433422	0102183
17		1	340433423	0102184
18	CHOPPER DRIVE	1	344311130	1923309 EE-TECH
19	CHOPPER DRIVE	1	344311151	1923499
20		1	340433253	1601120
21	HYDRAULIC PUMP DRIVE	1	344311240	0324211
22	FAN DRIVE	1	340433405	0302134
23		1	340433159	0200134

L 626

			OE	
1	POST CYLINDER VARIATOR DRIVE	1	344311318	1925345 EE-TECH
2	STRAW ELEVATOR DRIVE	1	344311127	1923287 EE-TECH
2	STRAW ELEVATOR DRIVE	1	344312128	1927295
3	AUGER DRIVE TAILINGS AND GRAIN	1	344311123	1923257 EE-TECH
4	FAN RETURN DRIVE	1	340433539	1903342
5	STRAW ELEVATOR DRIVE	1	340433474	1902354
6	DISCHARGE DRIVE GRAIN TANK	1	340433475	0102163
7	ROTARY FILTER DRIVE	1	340433181	1900196
9	FAN DRIVE	1	340435150	1910179
11	CENTRAL RETURN DRIVE	1	340433984	1904193
12	REEL DRIVE VARIABLE SPEED	1	340434138	1960189
13		1	340433422	0102183
14	COMPRESSOR DRIVE	1	340433131	0200085
15		1	340433262	1901133
17		1	340433270	2001146
18	CHOPPER DRIVE	1	344311130	1923309 EE-TECH
19	CHOPPER DRIVE	1	344311151	1923499
20		1	340433151	0200118
20		1	340433253	1601120
22	HYDRAULIC PUMP DRIVE	1	344311240	0324211
24	FAN DRIVE	1	340433405K	0302134
36	FAN DRIVE	1	340433159	0200134
38		1	340435153	0203187

L 627 - INTEGRALE

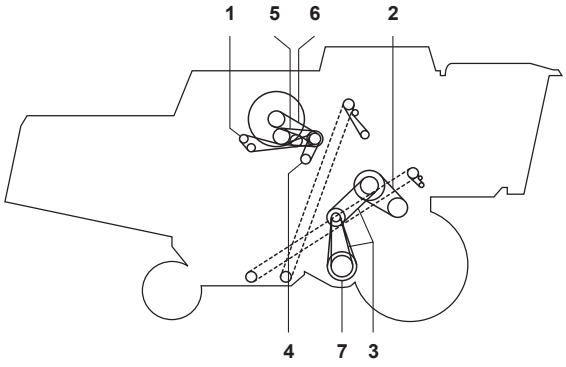

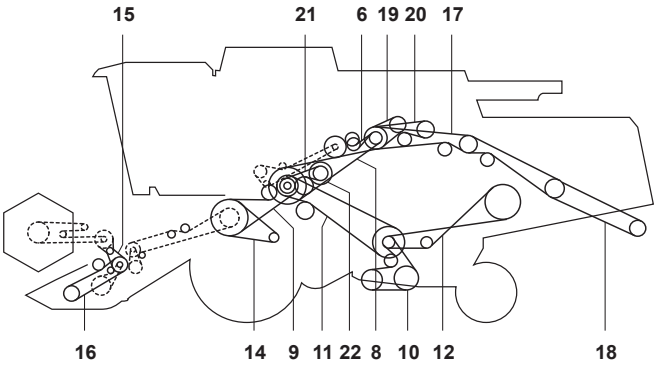

			OE	
1		1	340433179	1943273
2	DRUM VARI - DRIVE	2	340435124	1912180
3	RETURN FAN	2	340435150	1910179
4		1	340433132	0172217
5		1	340433262	1901133
6		1	340433268	1401145
7	FAN DRIVE	1	340435153	0203187
8	POST CYLINDER VARIATOR DRIVE	1	344311318	1925345 EE-TECH
9	STRAW ELEVATOR DRIVE	1	344312128	1927295
10	AUGER DRIVE TAILINGS AND GRAIN	1	344311123	1923257 EE-TECH
11	FAN RETURN DRIVE	1	340433539	1903342
12	STRAW ELEVATOR DRIVE	1	340433474	1902354
13	DISCHARGE DRIVE GRAIN TANK	1	340433475	0102163
14	CENTRAL RETURN DRIVE	1	340433984	1904193
15	REEL DRIVE VARIABLE SPEED	1	340434138	1960189
16		1	340433422	0102183
17	CHOPPER DRIVE	1	344311130	1923309 EE-TECH
18	CHOPPER DRIVE	1	344311151	1923499
19		1	340433253	1601120
20	HYDRAULIC PUMP DRIVE	1	344311240	0324211
21	FAN DRIVE	1	340433405	0302134
22	FAN DRIVE	1	340433159	0200134

L 627 - MCS

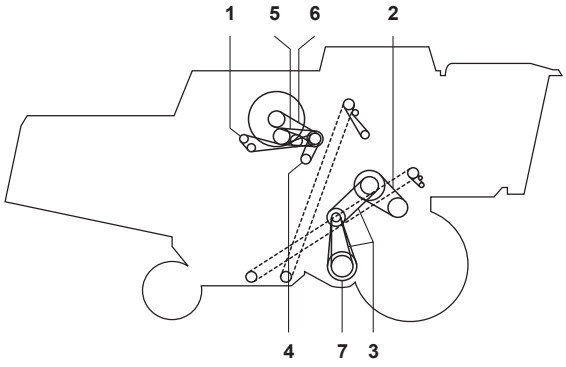

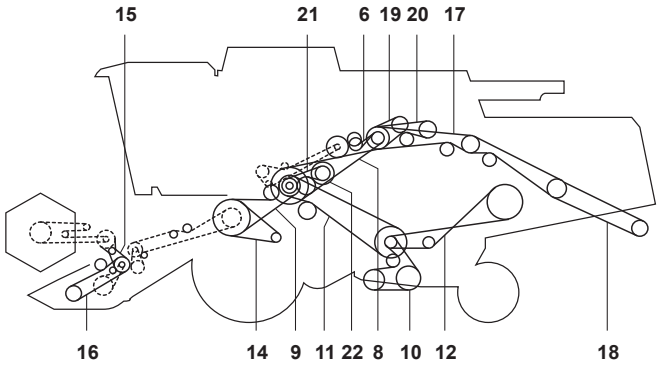

			OE	
1		1	340433179	1943273
2	DRUM VARI - DRIVE	2	340435124	1912180
3	RETURN FAN	2	340435150	1910179
4		1	340433132	0172217
5		1	340433262	1901133
6		1	340433268	1401145
7	FAN DRIVE	1	340435153	0203187
8	POST CYLINDER VARIATOR DRIVE	1	344311318	1925345 EE-TECH
9	STRAW ELEVATOR DRIVE	1	344312128	1927295
10	AUGER DRIVE TAILINGS AND GRAIN	1	344311123	1923257 EE-TECH
11	FAN RETURN DRIVE	1	340433539	1903342
12	STRAW ELEVATOR DRIVE	1	340433474	1902354
13	DISCHARGE DRIVE GRAIN TANK	1	340433475	0102163
14	CENTRAL RETURN DRIVE	1	340433984	1904193
15	REEL DRIVE VARIABLE SPEED	1	340434138	1960189
16		1	340433422	0102183
17	CHOPPER DRIVE	1	344311130	1923309 EE-TECH
18	CHOPPER DRIVE	1	344311151	1923499
19		1	340433253	1601120
20	HYDRAULIC PUMP DRIVE	1	344311240	0324211
21	FAN DRIVE	1	340433405	0302134
22	FAN DRIVE	1	340433159	0200134

M 84

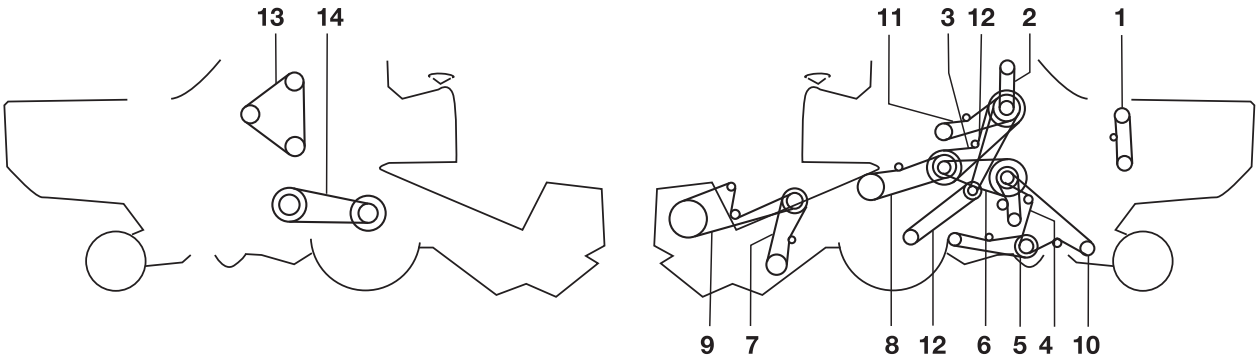

			OE	
1	FAN DRIVE (GRAIN)	1	340433131	0200085
2	HYDRAULIC PUMP DRIVE	1	340433223	2601079
3	AUGER DRIVE	1	340433266	2001146
4	ELEVATOR DRIVE GRAIN	1	340433274	0101164
4	ELEVATOR DRIVE GRAIN	1	340433284	2301174
5	FAN DRIVE	1	340433281	0201173
6	RETURN DRIVE	1	340433414	0102137
7	RETURN DRIVE (RICE)	1	340433414	0102137
7	RETURN DRIVE	1	340433419	0202168
8	FEEDER CHANNEL	1	340433427	0302219
9	REEL DRIVE (RICE)	1	340433440	0202275
9	REEL DRIVE	1	340433441	0202305
10	STRAW WALKER DRIVE	1	340433970	1905344
11	THRESHING DRUM VARIATOR DRIVE	1	344311218	2024241 EE-TECH
12	TRACTION DRIVE	1	340435120	0111213
12	TRACTION DRIVE	1	340433145	0400108
12	BLOWER DRIVE	1	340433185	0300206
13	FAN DRIVE	1	340433271	0101151
14	CYLINDER VARIATOR DRIVE	1	340435135	1913165
14	CYLINDER VARIATOR DRIVE (RICE)	1	340435138	0214173

M 90

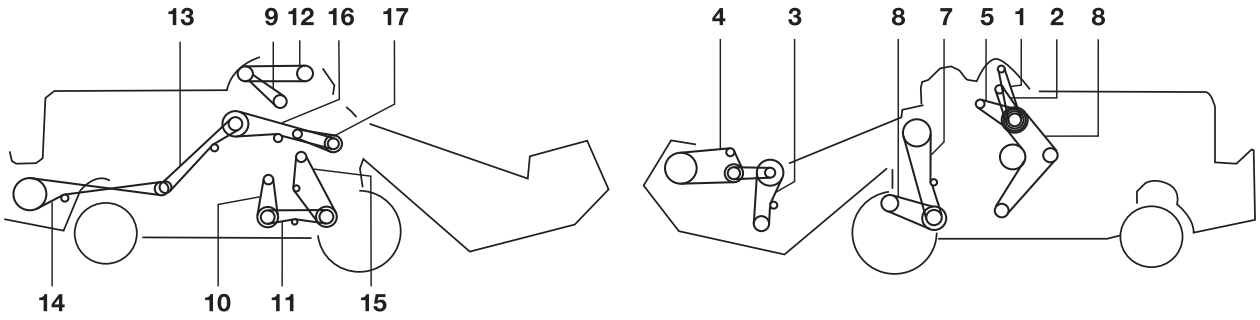

			OE	
1	FOR VARIATOR DRIVE	1	340433163	0200143
2	FAN DRIVE VARIABLE SPEED	1	340433176	1900174
3	RETURN DRIVE	1	340433415	0201191
4	REEL DRIVE	1	340433433	0202235
5	DE-AWNER DRIVE	1	340433425	0702199
6	STRAW WALKER DRIVE	1	340433968	2002323
7	THRESHING DRUM VARIATOR DRIVE	1	340434247	☎
8	TRACTION DRIVE	1	340435100	0112142
9	TRACTION DRIVE (GRAIN)	1	340433241	1901098
10	DISCHARGE DRIVE GRAIN TANK	1	340433233	0201090
11	RETURN DRIVE	1	340433926	1901133
12	ELEVATOR DRIVE GRAIN	1	340433272	0201155
13		1	340433441	0202305
14		1	340433453	1402474
15	FAN DRIVE	1	340433281	0201173
16	CYLINDER DRIVE	1	340433961	2002190
17	DE-AWNER DRIVE	1	340435100	0112142

M 92

			OE	
1	UNLOADING SYSTEM - VIBRATOR	1	340433980	0204153
2	THRESHING DRIVE	1	344311217	0224236 EE-TECH
3	AUGER DRIVE	1	340433252	1601120
4	PUMP DRIVE	1	340433223	2601079
5	TRACTION VARI-DRIVE	1	340435120	0111213
6	RETURN DRIVE	1	340433412	1902144
7	STRAW WALKER - AUGER DRIVE	1	340433970	1905344
8	MAIN FAN	1	340433283	0201177
9	UPPER SHAFT ELEVATOR	1	340433432	0302224
10	REEL DRIVE	1	340433458	0702292
12		1	340433174	0372301
13	BLOWER DRIVE	1	340433185	0300206
14	CYLINDER VARI-DRIVE	1	340435138	0214173
15	UNLOADING SYSTEM - VIBRATOR	1	340433980	0204153

M 100

			OE	
1	HYDRAULIC PUMP DRIVE	1	340432232	0201092
1	HYDRAULIC PUMP DRIVE	1	340432239	0101099
2	DE-AWNER BEATERS DRIVE	1	340432437	0302262
2	DE-AWNER PADD. DRIVE	1	340432438	0202268
3	FAN DRIVE	1	340433289	1901188
3	FAN DRIVE	1	340433290	0201191
4	STRAW WALKER DRIVE	1	340433308	0101242
5	REEL DRIVE VARIABLE SPEED	1	340433414	0102137
5	REEL DRIVE VARIABLE SPEED	1	340433419	0202168
5	REEL DRIVE VARIABLE SPEED	1	340433470	0402170
6	ELEVATOR DRIVE (UPPER) SHAFT	1	340433427	0302219
7	REEL DRIVE	1	340433440	0202275
7	REEL DRIVE	1	340433441	0202305
8	CENTRAL RETURN DRIVE	1	340433440	0202275
9	AUGER DRIVE TAILINGS AND GRAIN	1	340433963	0202209
10	THRESHING DRUM VARIATOR DRIVE	1	340434245	1981392
12	DISCHARGE DRIVE GRAIN TANK	1	340432244	0401111
12	DISCHARGE DRIVE GRAIN TANK	1	340432246	0401111
13	BEATER DRUM DRIVE	1	340435135	1913165
13	BEATER DRUM DRIVE	1	340435138	0214173
14	ALTERNATOR AND WATERPUMP DRIVE	1	/	/

M 100 AL

			OE	
1	ELEVATOR DRIVE (UPPER) SHAFT	1	340433427	0302219
2	THRESHING DRUM VARIATOR DRIVE	1	340434245	1981392
3	TRACTION DRIVE	1	340435127	1912236
4	HYDRAULIC PUMP DRIVE	1	340432239	0101099
5	CENTRAL RETURN DRIVE	1	340433440	0202275
6	DE-AWNER BEATERS DRIVE	1	340432438	0202268
7	FAN DRIVE	1	340433289	1901188
8	AUGER DRIVE TAILINGS AND GRAIN	1	340433963	0202209
9	STRAW WALKER DRIVE	1	340433308	0101242
10	REEL DRIVE	1	340433441	0202305
11	REEL DRIVE VARIABLE SPEED	1	340434140	1961209
12	BEATER DRUM DRIVE	1	340435138	0214173
13	DISCHARGE DRIVE GRAIN TANK	1	340432244	0401111
14	ALTERNATOR AND WATERPUMP DRIVE	1	/	/

M 112

			OE	
1	REEL DRIVE VARIABLE SPEED	1	340434140	1961209
2	BLOWER DRIVE	1	340433182	1900196
3	THRESHING DRUM VARIATOR DRIVE	1	344311221	1424276
4	DISCHARGE DRIVE GRAIN TANK	1	340433417	0102148
5	TRACTION DRIVE	1	340435127	1912236
6	OIL PUMP DRIVE	1	340432244	0401111
7	CENTRAL RETURN DRIVE	1	340433357	1903286
8	FAN DRIVE	1	340433289	1901188
9	STRAW WALKER DRIVE	1	340433455	0202285
10	AUGER DRIVE TAILINGS AND GRAIN	1	340433430	0302220
11	FAN RETURN DRIVE	1	340433409	0102112
12	FAN DRIVE	1	340433410	1902120
13	STRAW ELEVATOR DRIVE	1	340433531	1103242
14	REEL DRIVE	1	340433435	0302251
15	DE-AWNER DRIVE	1	340433456	0302313
16	SELECTOR AUGER DRIVE	1	340433236	1901094
17	ROTARY FILTER DRIVE	1	340433134	1900089
18	ROTARY FILTER DRIVE	1	340433162	0200143
19	CYLINDER VARIATOR DRIVE	1	340435146	1913184

M 112 AL

			OE	
1	BLOWER DRIVE	1	340433182	1900196
2	STRAW ELEVATOR DRIVE	1	340433531	1103242
3	THRESHING DRUM VARIATOR DRIVE	1	344311221	1424276
4	DISCHARGE DRIVE GRAIN TANK	1	340433417	0102148
5	HYDRAULIC PUMP DRIVE	1	340432244	0401111
6	HYDROSTATIC PUMP DRIVE	1	344311212	1924192
7	ELEVATOR DRIVE UNIT	1	340433289	1901188
8	STRAW WALKER DRIVE	1	340433455	0202285
9	CENTRAL RETURN DRIVE	1	340433537	1903286
10	FAN DRIVE	1	340433410	1902120
11	FAN DRIVE	1	340433409	0102112
12	ELEVATOR TAILINGS AND GRAIN	1	340433430	0302220
13	SELECTOR AUGER DRIVE	1	340433236	1901094
14	DE-AWNER DRIVE	1	340433456	0302313
15	ROTARY FILTER DRIVE	1	340433134	1900089
16	ROTARY FILTER DRIVE	1	340433162	0200143
17	CYLINDER VARIATOR DRIVE	1	340435146	1913184
18	REEL DRIVE VARIABLE SPEED	1	340434140	1961209
19	REEL DRIVE	1	340433456	0302313

M 120

			OE	
1	REEL DRIVE	1	340433435	0302251
2	REEL DRIVE VARIABLE SPEED	1	340434140	1961209
3	ELEVATOR DRIVE (UPPER) SHAFT	1	340433531	1103242
4	THRESHING DRUM VARIATOR DRIVE	1	340434250	1981410
5	TRACTION DRIVE	1	340435127	1912236
6	HYDRAULIC PUMP DRIVE	1	340432232	0201092
7	CENTRAL RETURN DRIVE	1	340433537	1903286
8	DE-AWNER PADD. DRIVE	1	340432436	0302251
8	DE-AWNER BEATERS DRIVE	1	340432437	0302262
9	MAIN FAN	1	340432250	1601120
10	AUGER DRIVE TAILINGS AND GRAIN	1	340432433	0202235
11	STRAW WALKER DRIVE	1	340433440	0202275
12	ALTERNATOR AND WATERPUMP DRIVE	1	7108	0422134
13	DISCHARGE DRIVE GRAIN TANK	1	340432244	0401111
14	BEATER DRUM DRIVE	2	340435117	1911159

M 132

			OE	
1	REEL DRIVE	1	340433435	0302251
2	REEL DRIVE VARIABLE SPEED	1	340434140	1961209
3	BLOWER DRIVE	1	340433182	1900196
4	STRAW ELEVATOR DRIVE	1	340433531	1103242
5	THRESHING DRUM VARIATOR DRIVE	1	344311221	1424276
6	DISCHARGE DRIVE GRAIN TANK	1	340433417	0102148
7	OIL PUMP DRIVE	1	340432244	0401111
8	TRACTION VARI DRIVE	1	340435127	1912236
9	CENTRAL RETURN DRIVE	1	340433537	1903286
10	FAN GRAIN TANK	1	340433289	1901188
11	STRAW WALKER DRIVE	1	340433455	0202285
12	AUGER DRIVE TAILINGS AND GRAIN	1	340433430	0302220
13	FAN DRIVE	1	340433409	0102112
14	FAN DRIVE	1	340433410	1902120
15	SELECTOR AUGER DRIVE	1	340433236	1901094
16	DE-AWNER RETURN DRIVE	1	340433456	0302313
17	ROTARY FILTER RETURN DRIVE	1	340433134	1900089
18	ROTARY FILTER DRIVE	1	340433162	0200143
19	CYLINDER VARIATOR DRIVE	1	340435125	1912177

M 150

			OE	
1	REEL DRIVE	1	340433435	0302251
2	REEL DRIVE VARIABLE SPEED	1	340434140	1961209
3	STRAW ELEVATOR DRIVE	1	340433531	1103242
4	THRESHING DRUM VARIATOR DRIVE	1	344311315	1925277
5	DISCHARGE DRIVE GRAIN TANK	1	340433417	0102148
6	HYDRAULIC PUMP DRIVE	1	340432244	0401111
7	TRACTION DRIVE	1	340435127	1912236
8	SELECTOR FAN DRIVE	1	340433128	0400081
9	STRAW WALKER DRIVE	1	340433442	2002323
10	CENTRAL RETURN DRIVE	1	340433537	1903286
11	FAN RETURN DRIVE	1	340433413	0102137
12	AUGER DRIVE TAILINGS AND GRAIN	1	340433440	0202275
13	FAN DRIVE	1	340433406	0102101
14	SELECTOR AUGER DRIVE	1	340433281	0201173
15	DE-AWNER DRIVE	1	340433431	0702225
16	ROTARY FILTER RETURN DRIVE	1	340433133	1400087
17	ROTARY FILTER DRIVE	1	340433184	0300202
18	ROTARY FILTER DRIVE	1	340433143	0400100
19	ALTERNATOR DRIVE	1	8822704	1472238
20	DE-AWNER RETURN DRIVE	1	340432433	0202235
22	FAN RETURN DRIVE	1	340433184	0300202
23	BLOWER DRIVE	1	340433157	1900132

M 152

			OE	
1	REEL DRIVE VARIABLE SPEED	1	340434140	1961209
2	BLOWER DRIVE	1	340433182	1900196
3	THRESHING DRUM VARIATOR DRIVE	1	344311315	1925277
4	DISCHARGE DRIVE GRAIN TANK	1	340433417	0102148
5	TRACTION DRIVE	1	340435127	1912236
6	OIL PUMP DRIVE	1	340432244	0401111
7	SELECTOR FAN DRIVE	1	340433128	0400081
8	STRAW WALKER DRIVE	1	340433442	2002323
9	AUGER DRIVE TAILINGS AND GRAIN	1	340433440	0202275
10	CENTRAL RETURN DRIVE	1	340433537	1903286
11	FAN RETURN DRIVE	1	340433413	0102137
12	FAN DRIVE	1	340433406	0102101
13	STRAW ELEVATOR DRIVE	1	340433531	1103242
14	REEL DRIVE	1	340433435	0302251
15	SELECTOR AUGER DRIVE	1	340433281	0201173
16	DE-AWNER DRIVE	1	340433431	0702225
17	ROTARY FILTER RETURN DRIVE	1	340433133	1400087
18	ROTARY FILTER DRIVE	1	340433143	0400100
19	ROTARY FILTER DRIVE	1	340433184	0300202
20	CYLINDER VARIATOR DRIVE	1	340435125	1912177
21	DE-AWNER RETURN DRIVE	1	340432433	0202235

MX 240

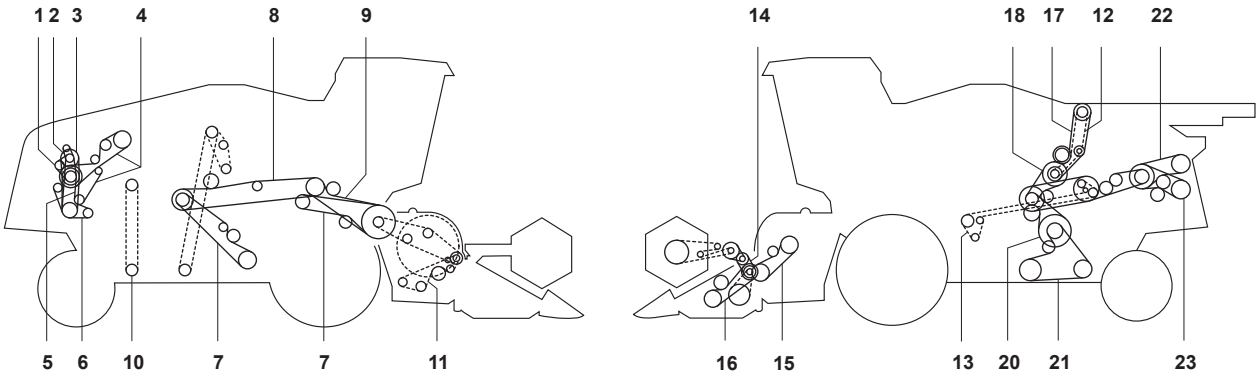

			OE	
1		1	4642578	☎
2		1	8106679	0173208
3		1	340433286	0301183
4	OIL COOLING FAN	1	340433183	1900211
5	WATER COOLING FAN (PRIMARY)	1	340433269	1101149
6	COMPRESSOR DRIVE	1	340433125	0200076
7		1	340433311	1401248
8	CYLINDER DRIVE	1	344311137	1923387 EE-TECH
9	CYLINDER DRIVE	1	344311127	1923287 EE-TECH
10		1	321346350	Chain
11		1	344375132	Chain
12		1	344375130	☎
13		1	344375223	☎
14	REEL VARI - DRIVE	1	340434138	1960189
15	FEEDER DRUM - CYLINDER DRIVE	1	344310113	0768273
16		1	340433422	0102183
17	AUGER DRIVE	1	344310237	1969335
18	DISTRIBUTION AUGER	1	344311113	1923180
19		1	344311319	1925384 EE-TECH
20		1	344311117	1423207
21		1	340433471	0202245
22		1	344311213	0124208
23	HYDRAULIC PUMP DRIVE	1	344311240	0324211

MX 240 R

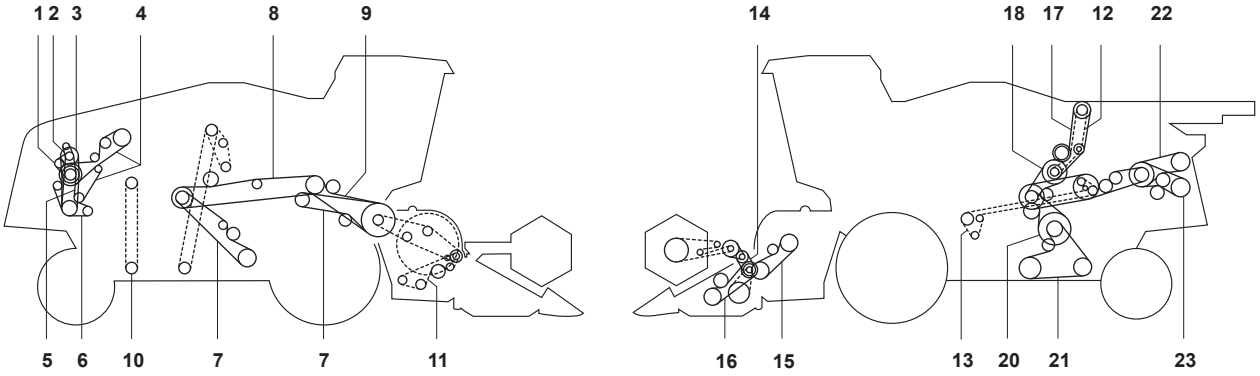

			OE	
1		1	4813541	0372244
2		1	8106679	0173208
3		1	340433286	0301183
4	OIL COOLING FAN	1	340433183	1900211
5	WATER COOLING FAN (PRIMARY)	1	340433269	1101149
6	COMPRESSOR DRIVE	1	340433125	0200076
7		1	340433311	1401248
8	CYLINDER DRIVE	1	344311137	1923387 EE-TECH
9	CYLINDER DRIVE	1	344311127	1923287 EE-TECH
10		1	321346350	Chain
11		1	344375132	Chain
12		1	344375130	☎
13		1	344375223	☎
14	REEL VARI - DRIVE	1	340434138	1960189
15	FEEDER DRUM - CYLINDER DRIVE	1	344310113	0768273
16		1	340433422	0102183
17	AUGER DRIVE	1	344310237	1969335
18	DISTRIBUTION AUGER	1	344311113	1923180
19		1	344311319	1925384 EE-TECH
20		1	344311117	1423207
21		1	340433471	0202245
22		1	344311213	0124208
23	HYDRAULIC PUMP DRIVE	1	344311240	0324211

MX 300

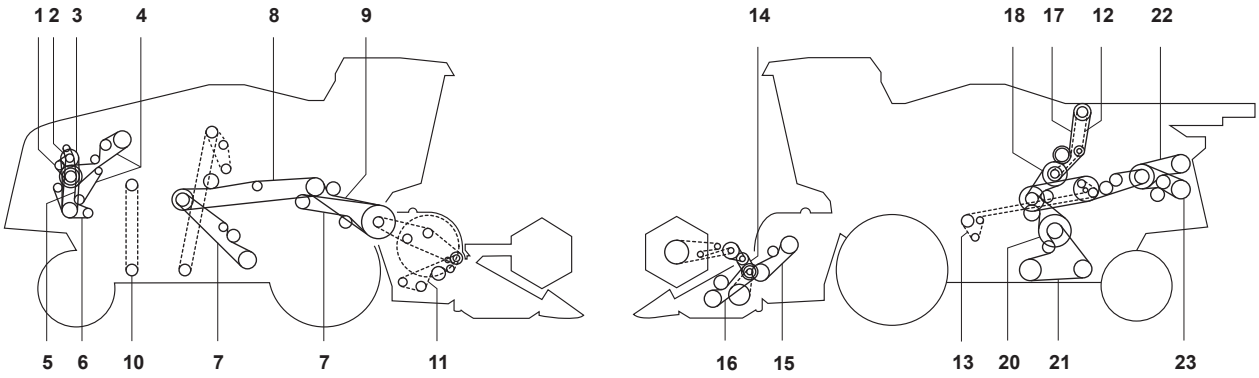

			OE	
1		1	4813541	0372244
2		1	8106679	0173208
3	WATER COOLING FAN (SECONDARY)	1	340433285	2001178
4	OIL COOLING FAN	1	340433183	1900211
5	WATER COOLING FAN (PRIMARY)	1	340433269	1101149
6	COMPRESSOR DRIVE	1	340433125	0200076
7		1	340433311	1401248
8	CYLINDER DRIVE	1	344311137	1923387 EE-TECH
9	CYLINDER DRIVE	1	344311127	1923287 EE-TECH
10		1	321346350	Chain
11		1	344375132	Chain
12		1	344375130	☎
13		1	344375223	☎
14	REEL VARI - DRIVE	1	340434138	1960189
15	FEEDER DRUM - CYLINDER DRIVE	1	344310113	0768273
16		1	340433422	0102183
17	AUGER DRIVE	1	344310237	1969335
18	DISTRIBUTION AUGER	1	344311113	1923180
19		1	344311319	1925384 EE-TECH
20		1	344311117	1423207
21		1	340433471	0202245
22		1	344311213	0124208
23	HYDRAULIC PUMP DRIVE	1	344311240	0324211

MX 300 R

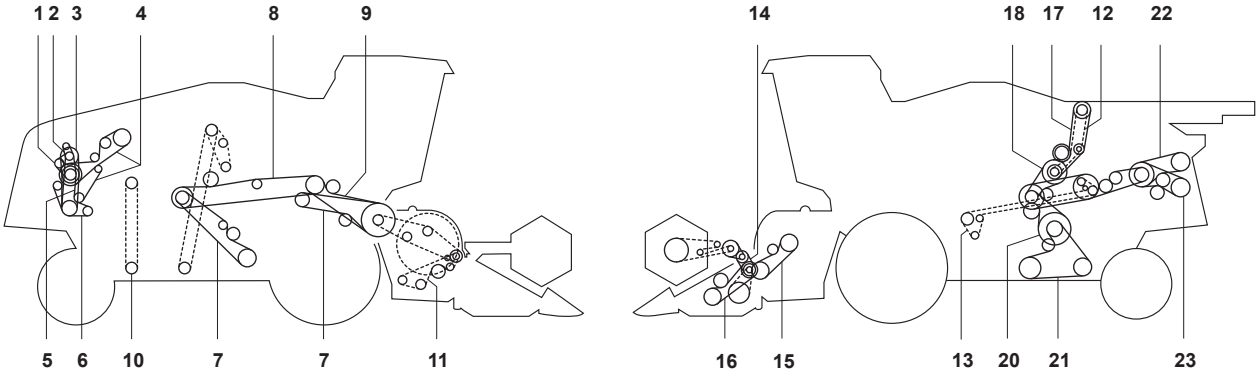

			OE	
1		1	4642578	☎
2		1	8106679	0173208
3	WATER COOLING FAN (SECONDARY)	1	340433285	2001178
4	OIL COOLING FAN	1	340433183	1900211
5	WATER COOLING FAN (PRIMARY)	1	340433269	1101149
6	COMPRESSOR DRIVE	1	340433125	0200076
7		1	340433311	1401248
8	CYLINDER DRIVE	1	344311137	1923387 EE-TECH
9	CYLINDER DRIVE	1	344311127	1923287 EE-TECH
10		1	321346350	Chain
11		1	344375132	Chain
12		1	344375130	☎
13		1	344375223	☎
14	REEL VARI - DRIVE	1	340434138	1960189
15	FEEDER DRUM - CYLINDER DRIVE	1	344310113	0768273
16		1	340433422	0102183
17	AUGER DRIVE	1	344310237	1969335
18	DISTRIBUTION AUGER	1	344311113	1923180
19		1	344311319	1925384 EE-TECH
20		1	344311117	1423207
21		1	340433471	0202245
23	HYDRAULIC PUMP DRIVE	1	344311240	0324211

140 (FROM 1972)

			OE	
1	STRAW WALKER CONTROL	1	/	2529434
2	RADIATOR WATER VENTILATOR CONTROL	1	/	1600100
3	DUST FAN CONTROL	1	/	2500346
4	LIFTING PUMP CONTROL	1	/	2501076
5	RADIATOR OIL CONTROL	1	/	0301141
6	SILOS OUTLET AUGER CONTROL	1	/	0301211
7	SILOS BODY AUGER CONTROL	1	/	0301301
8	CLEAN - BODY AUGER CONTROL	1	/	2501308
9	REEL DRIVE CONTROL	1	/	2502096
10	SILOS OUTLET AUGER CONTROL	1	/	0402153
11	THRESHING AUGER CONTROL	1	/	0202172
12	CLEAN - HOPPER CONTROL	1	/	0202172
13	CLEANER CONTROL	1	/	0202182
14	FEEDER CONTROL	1	/	1602254
15	THRESHING VENTILATION CONTROL	1	/	0202310
16	THRESHING MOVEMENT CONTROL	1	/	1402336
17	STRAW WALKER CONTROL	1	/	1602396
18	TRIANGLE CLEANER CONTROL	1	/	0102411
19	RECOVERY CONTROL GRAIN	1	/	1402433

1800 (FROM 1972)

			OE	
1	STRAW WALKER CONTROL	1	/	2529434
2	RADIATOR WATER VENTILATOR CONTROL	1	/	1600100
3	DUST FAN CONTROL	1	/	2500346
4	LIFTING PUMP CONTROL	1	/	2501076
5	RADIATOR OIL CONTROL	1	/	0301141
6	SILOS OUTLET AUGER CONTROL	1	/	0301211
7	SILOS BODY AUGER CONTROL	1	/	0301301
8	CLEAN - BODY AUGER CONTROL	1	/	2501308
9	REEL DRIVE CONTROL	1	/	2502096
10	SILOS OUTLET AUGER CONTROL	1	/	0402153
11	THRESHING AUGER CONTROL	1	/	0202172
12	CLEAN - HOPPER CONTROL	1	/	0202172
13	CLEANER CONTROL	1	/	0202182
14	FEEDER CONTROL	1	/	1602254
15	THRESHING VENTILATION CONTROL	1	/	0202310
16	THRESHING MOVEMENT CONTROL	1	/	1402336
17	STRAW WALKER CONTROL	1	/	1602396
18	TRIANGLE CLEANER CONTROL	1	/	0102411
19	RECOVERY CONTROL GRAIN	1	/	1402433

L 2001 - L 1801

			OE	
1	LIFTING PUMP CONTROL	1	/	2501076
2	HULLER CONTROL	1	/	0101107
3	RETURN AUGER CONTROL RAISED	1	/	1601185
4	SILOS OUTLET AUGER CONTROL	1	/	2501256
5	BEATER CONTROL (REAR)	1	/	1201291
6	HOPPER AUGER CONTROL	1	/	1601349
7	SILOS BODY AUGER CONTROL	1	/	1401378
8	REEL DRIVE VARIABLE CONTROL	1	/	2502099
9	VENTILATOR CONTROL	1	/	0102115
10	SILOS OUTLET AUGER CONTROL	1	/	0302136
11	CROSS VENTILATOR CONTROL	1	/	1602240
12	FEEDER CONTROL	1	/	1602254
13	SILOS HOPPER AUGER CONTROL	1	/	1602254
14	MAIN CONTROL L 1801	1	/	0102257
16	STRAW WALKER CONTROL	1	/	1302519

16

			OE	
1		1	S0615130	2002211
2		1	S0615124	0302197
3		1	S0614150	1401234
4		1	S0619170	0110162
5		1	S0619065	2023280 EE-TECH
6		1	S0614136	2001162
7		1	S0615146	1402336
8		1	S0614172	1401405
9		1	S0615147	1902376
10		1	S0613148	0100159
11		1	S0613116	0100083
13		1	S0615116	1602150
14		1	S0614152	0101242
15		1	S0619175	0212169

20

			OE	
1		1	S0615130	2002211
2		1	S0615133	0302251
3		1	S0619185	0111232
4		1	S0619185	0111232
5		1	S0614125	1401129
7		1	S0619185	0111232
8		1	S0615150	0102406
9		1	S0615140	2002283
11		1	S0614147	1601218
12		1	S0614225	0101151
12		1	S0614131	1201153
13		1	S0613116	0100083
13		1	S0613124	1472236
14		1	S0614152	0101242
15		1	S0615121	0202172
16		1	S0619180	2013220

MASSEY FERGUSON

24

		OE	
1	1	41964300	1401122
2	1	41972100	0104232
3	1	/	/
4	1	41928100	2101138
5	1	41958500	0202528
6	1	41929500	1401144
7	1	41989100	1630347
8	1	41988900	0130272
9	1	41955900	2002253
10	1	41972800	0104248
11	1	41978500	0104430
12	1	41927800	2001129
13	1	41935700	0301211
14	1	41988700	1630274
15	1	41926300	0301118
16	1	41930300	0101151
17	1	41935500	1401209
18	1	41980800	1613159
19	1	41912300	0200204

27

		OE	
1	1	41983500	0102184
2	1	41964300	1401122
3	1	41989200	0130326
4	1	41991700	1424250 EE-TECH
5	1	41982400	0402159
6	1	41990100	0105408
7	1	41987800	2002190
8	1	41934800	0301198
9	1	41993400	0324237
10	1	41929000	2001143
11	1	41942100	1601349
12	1	41987300	1602396
13	1	41990200	0105447
14	1	41936200	1401220
15	1	42328100	☎
16	1	42328200	☎
17	1	42328400	☎
18	1	41929100	1401145
19	1	41912400	0200204
20	1	41982400	0402159
21	1	41987900	0702151
22	1	41980400	1613281

29

			OE	
1		1	41983500	0102184
2		1	41964300	1401122
3		1	41989200	0130326
4		1	41991700	1424250 EE-TECH
5		1	41982400	0402159
6		1	41990100	0105408
7		1	41987800	2002190
8		1	41934800	0301198
9		1	41973400	☎
10		1	41930200	1101149
11		1	41942100	1601349
12		1	41987300	1602396
13		1	41990200	0105447
14		1	41936200	1401220
15		1	42328100	☎
16		1	42328200	☎
17		1	42328400	☎
18		1	41929100	1401145
19		1	41912400	0200204
20		1	41982400	0402159
21		1	41987900	0702151
22		1	41980400	1613281

31

			OE	
1		1	41983500	0102184
2		1	41964300	1401122
3		1	41989200	0130326
4		1	41991700	1424250 EE-TECH
5		1	41982400	0402159
6		1	41990100	0105408
7		1	41987800	2002190
8		1	41934800	0301198
9		1	41973400	☎
10		1	41930200	1101149
11		1	41942100	1601349
12		1	41987600	1402501
13		1	41990200	0105447
14		1	41936200	1401220
15		1	42328100	☎
16		1	42328200	☎
17		1	42328400	☎
18		1	41929100	1401145
19		1	41912400	0200204
20		1	41982400	0402159
21		1	41987900	0702151
22		1	41980400	1613281

31 OLD

			OE	
1	FEEDER DRUM - COUNTERSHAFT	1	402604M1	1901098
2	STRAW WALKER DRIVE	1	410647M1	0104397
3	KNIFE DRIVE REDUCTION	1	410957M1	0302136
4	FEEDER AUGER	1	410958M1	0102129
5	KNIFE DRIVE	1	410959M1	0102184
6	THRESHING DRUM VARIATOR DRIVE	1	410617M1	☎
7	MAIN DRIVE	1	411218M1	2610252
8	HYDRAULIC PUMP DRIVE	1	411125M1	0373264
9	CLUTCH GRAIN TANK	1	411020M1	2601079
10	TABLE DRIVE	1	410919M1	0302219
11	STRAW BALER	1	405928M1	1501475

86 (F)

			OE	
1	TABLE FEEDER DRUM	1	412236M1	0302224
2	TANK UNLOADER DRIVE	1	412074M1	0301117
3	FANNING MILL (UPPER)	1	402605M1	0201155
4	HYDRAULIC PUMP DRIVE	1	402177M1	0401111
4	HYDRAULIC PUMP DRIVE	1	402604M1	1901098
5	BEATER DRIVE	1	402608M3	1439317
5	BEATER DRIVE	1	413122M2	0139325
6	FANNING MILL	1	/	/
7	STRAW WALKER SHAKER	1	402603M1	1901251
8	TRACTION (UPPER)	1	412333M1	0111241
8	TRACTION (UPPER)	1	905921M1	0111241
9	TRACTION (LOWER)	1	401110M1	0111210
10	REDUCER	1	412237M1	1430213
11	AUGER DRIVE (FRONT)	1	412399M1	0302136
12	KNIFE DRIVE	1	402607M1	1202193
13	REEL DRIVE	1	/	/
14	DRUM DRIVE	1	/	/
15	FANNING MILL	1	402604M1	1901098

87 (F)

			OE	
1	TABLE FEEDER DRUM	1	412236M1	0302224
2	TANK UNLOADER DRIVE	1	412074M1	0301117
3	FANNING MILL (UPPER)	1	402605M1	0201155
4	HYDRAULIC PUMP DRIVE	1	402177M1	0401111
4	HYDRAULIC PUMP DRIVE	1	417468M1	0201108
5	BEATER DRIVE	1	402608M3	1439317
6	FANNING MILL	1	/	/
7	STRAW WALKER SHAKER	1	402603M1	1901251
8	TRACTION (UPPER)	1	905921M1	0111241
9	TRACTION (LOWER)	1	401110M1	0111210
10	REDUCER	1	412237M1	1430213
11	AUGER DRIVE (FRONT)	1	412399M1	0302136
12	KNIFE DRIVE	1	402607M1	1202193
13	REEL DRIVE	1	/	/
14	DRUM DRIVE	1	/	/
15	FANNING MILL	1	621262M1	0101099

86 - 87 OLD

			OE	
1	TRACTION DRIVE	1	401109M1	0111241
1	TRACTION DRIVE	1	412333M1	0111241
2	TRACTION DRIVE	1	401110M1	0111210
3	HYDRAULIC PUMP DRIVE	1	402177M1	0401111
3	HYDRAULIC PUMP DRIVE	1	403041M1	0701095
4	STRAW WALKER DRIVE	1	402603M1	1901251
5	KNIFE DRIVE	1	402607M1	1202193
6	BEATER BEHIND CYLINDER	1	402608M3	1439317
7	KNIFE DRIVE (UPPER)	1	412237M1	1430213
8	FEEDER AUGER	1	412399M1	0302136
9	STRAW BALER	1	328656M1	2330562
10	FANNING MILL	1	402604M1	1901098
11	FANNING MILL (UPPER)	1	402605M1	0201155
12	TANK UNLOADER DRIVE	1	412074M1	0301117
13	FEEDER DRIVE	1	412236M1	0302224

186 (F)

			OE	
1	TABLE FEEDER DRUM	1	1724154M1	0202209
1	TABLE FEEDER DRUM	1	417974M1	0502215
2	TANK UNLOADER DRIVE	1	621259M1	0902122
3	FANNING MILL (UPPER)	1	621261M1	0201170
4	HYDRAULIC PUMP DRIVE	1	418900M1	0101099
5	BEATER DRIVE	1	418232M1	0139325
6	FANNING MILL	1	/	/
7	STRAW WALKER SHAKER	1	621258M1	0101245
8	TRACTION (UPPER)	1	905921M1	0111241
9	TRACTION (LOWER)	1	905920M1	0111213
10	REDUCER	1	417972M1	1430213
11	AUGER DRIVE (FRONT)	1	418209M1	0302134
12	KNIFE DRIVE	1	1722835M1	0102161
12	KNIFE DRIVE	1	402607M1	1202193
13	REEL DRIVE	1	/	/
14	REEL DRIVE	1	/	/
15	FANNING MILL	1	621262M1	0101099

186 OLD

			OE	
0	RADIATOR FAN DRIVE	1	893575M1	0372231
1	SHAKER SHOE DRIVE	1	417660M1	0101245
2	BEATER - FAN (REAR)	1	417795M1	0201170
3	FANNING MILL	1	417797M1	0101099
4	TRACTION DRIVE	1	401109M1	0111241
5	TRACTION DRIVE	1	417995M1	0111213
6	KNIFE DRIVE (UPPER)	1	417972M1	1430213
7	FEEDER DRIVE	1	1724154M1	0202209
7	FEEDER DRIVE	1	417974M1	0502215
8	KNIFE DRIVE	1	402607M1	1202193
9	FEEDER AUGER	1	418209M1	0302134
10	TANK UNLOADER DRIVE	1	621259M1	0902122
11	BEATER BEHIND CYLINDER	1	418232M1	0139325
12	HYDRAULIC PUMP DRIVE	1	417468M1	0201108
14	HYDRAULIC PUMP DRIVE	1	418900M1	0101099

187

			OE	
1	TABLE FEEDER DRUM	1	1724154M1	0202209
1	TABLE FEEDER DRUM	1	417974M1	0502215
2	TANK UNLOADER DRIVE	1	621259M1	0902122
3	FANNING MILL (UPPER)	1	621261M1	0201170
4	HYDRAULIC PUMP DRIVE	1	417468M1	0201108
4	HYDRAULIC PUMP DRIVE	1	418900M1	0101099
5	BEATER / THRESHER CONTROL	1	418232M1	0139325
6	FANNING MILL	1	1721710M1	1901098
7	STRAW WALKER SHAKER	1	621258M1	0101245
8	TRACTION (UPPER)	1	905921M1	0111241
9	TRACTION (LOWER)	1	905920M1	0111213
10	REDUCER	1	417972M1	1430213
11	AUGER / FEEDER (FRONT)	1	418209M1	0302134
12	KNIFE - BLADE CONTROL	1	1722835M1	0102161
12	KNIFE DRIVE	1	402607M1	1202193
13	REEL DRIVE	1	/	/
15	FANNING MILL	1	621262M1	0101099
16	VENTILATOR	1	621262M1	0101099
17	DEFLECTOR DRUM	1	417795M1	0201170
18	CLEANING FAN DRIVE	1	417660M1	0101245
19	OUTLET	2	418192M1	0102125
20	VARIATOR (LOWER)	1	417995M1	0111213
21	VARIATOR (UPPER)	1	401109M1	0111241

206

			OE	
1	TABLE FEEDER DRUM	1	1724154M1	0202209
2	TANK UNLOADER DRIVE	1	1604055M1	0902122
3	FANNING MILL (UPPER)	1	621261M1	0201170
4	HYDRAULIC PUMP DRIVE	1	418900M1	0101099
5	BEATER / THRESHER	1	418232M1	0139325
6	FANNING MILL / DEFLECTOR DRUM	1	1445437M1	0118122
6	FANNING MILL	1	1721710M1	1901098
7	SHAKER STRAW	1	621258M1	0101245
8	TRACTION (UPPER)	1	905921M1	0111241
9	TRACTION (LOWER)	1	905920M1	0111213
10	REDUCER	1	417972M1	1430213
11	AUGER DRIVE (FRONT)	1	418209M1	0302134
12	KNIFE - BLADE CONTROL	1	1722835M1	0102161
12	KNIFE DRIVE	1	402607M1	1202193
13	FANNING MILL	1	621262M1	0101099
14	VENTILATION (SECONDARY)	1	621262M1	0101099
15	VARIATOR (LOWER)	1	417995M1	0111213
16	VARIATOR (UPPER)	1	401109M1	0111241

206 OLD

			OE	
1	SHAKER SHOE DRIVE	1	621258M1	0101245
2	BEATER - FAN (REAR)	1	621261M1	0201170
3	FANNING MILL	1	621262M1	0101099
4	DRUM DRIVE VARIABLE SPEED	1	905920M1	0111213
5	DRUM DRIVE VARIABLE SPEED	1	905921M1	0111241
6	KNIFE DRIVE (UPPER)	1	417972M1	1430213
7	FEEDER DRIVE	1	1724154M1	0202209
8	KNIFE DRIVE	1	402607M1	1202193
9	KNIFE DRIVE	1	1722835M1	0102161
10	TANK UNLOADER DRIVE	1	1604055M1	0902122
11	BEATER (REAR)	1	418232M1	0139325
13	HYDRAULIC PUMP DRIVE	1	418900M1	0101099
14	BEATER CLEANING (REAR)	1	1445437M1	0118122

240

			OE	
1	TABLE FEEDER DRUM	1	1724154M1	0202209
2	TANK UNLOADER DRIVE	1	1604055M1	0902122
3	FANNING MILL (UPPER)	1	621261M1	0201170
4	HYDRAULIC PUMP DRIVE	1	/	/
5	BEATER DRIVE	1	418232M1	0139325
6	FANNING MILL	1	/	/
7	STRAW WALKER SHAKER	1	621258M1	0101245
8	TRACTION (UPPER)	1	905921M1	0111241
9	TRACTION (LOWER)	1	905920M1	0111213
10	REDUCER	1	916833M1	0111123
10	REDUCER	1	417972M1	1430213
11	AUGER DRIVE (FRONT)	1	418209M1	0302134
12	KNIFE DRIVE	1	1722835M1	0102161
12	KNIFE DRIVE	1	402607M1	1202193
12	KNIFE DRIVE	1	410959M1	0102184
13	REEL DRIVE	1	1604401M1	0101285
15	FANNING MILL	1	621262M1	0101099

300

			OE	
0	COUNTERSHAFT - STRAW CHOPPER	1	1033078M1	1402412
0	AUGER (GRAIN)	1	227984M1	0102282
0	AIR CONDITIONING OR CLEAN FAN HIGH SPEED	1	834492M2	0101099
1	AUXILIARY CYLINDER	1	832822M1	1601205
2	CLEANING FAN DRIVE	1	832877M1	1901115
3	CYLINDER	1	832873M1	0112208
4	ALTERNATOR AND WATERPUMP DRIVE (DIESEL ENGINE)	1	236959M1	0422134
5	REEL DRIVE	1	832872M1	2002253
5	REEL DRIVE VARIABLE SPEED	1	833768M1	0110106
5	REEL DRIVE	1	834140M1	0302281
6	RETURN AUGER (GRAIN)	1	832866M2	0102415
7	HYDRAULIC PUMP DRIVE	1	230381M1	0102108
8	KNIFE DRIVE	1	834058M1	0102174
8	KNIFE DRIVE	1	832869M1	0202172
8	KNIFE DRIVE	1	834190M1	0202172
9	CLEANING FAN - (LOWER)	1	832876M1	2502099
9	CLEANING FAN - RIGHT HAND GRASS SEED	1	GH5047	0201109
10	TRACTION (LOWER) (GRAIN)	1	832789M3	☎
10	TRACTION (LOWER) (RICE)	1	832965M1	0311177
11	RADIATOR FAN (GAS ENGINE)	1	236670M1	0372242
11	RADIATOR FAN (DIESEL ENGINE)	1	236958M1	0372240
12	REEL DRIVE COUNTERSHAFT	1	834139M1	0302146
13	ROTARY SCREEN - COUNTERSHAFT (GAS ENGINE)	1	832895M2	2600070
14	ROTARY SCREEN - COUNTERSHAFT (DIESEL ENGINE)	1	832896M1	2600117
15	ROTARY SCREEN HYDRAULIC PUMP - (GAS ENGINE)	1	832867M1	0201258
16	STRAW WALKER DRIVE	1	832867M1	0201258
17	TABLE - PLATFORM	1	228147M91	2902231
17	TABLE - PLATFORM	1	832870M1	0102231
18	TANK UNLOADER DRIVE	1	832878M1	0102161
19	TRACTION (UPPER)	1	832790M3	☎
20	STRAW SPREADER DRIVE	1	832855M1	☎

MASSEY FERGUSON

307

			OE	
1	TABLE FEEDER DRUM	1	1724154M1	0202209
2	TANK UNLOADER DRIVE	1	1604055M1	0902122
3	FANNING MILL (UPPER)	1	621261M1	0201170
4	HYDRAULIC PUMP DRIVE	1	1720674M1	0202235
5	BEATER / THRESHER	1	1720255M1	0124297
5	BEATER / THRESHER	1	1603701M1	1623297 EE-TECH
6	FANNING MILL / VARIATOR	1	621262M1	0101099
7	STRAW WALKER SHAKER	1	621258M1	0101245
8	TRACTION (LOWER)	1	905921M1	0111241
9	TRACTION (UPPER)	1	905920M1	0111213
10	REDUCER FROM 10 FEET / BAR	1	916833M1	0111123
10	CONTROL REDUCER UP TO 8.5 FEET / BAR	1	417972M1	1430213
11	CONTROL FRONT AUGER	1	418209M1	0302134
12	KNIFE WOBBLE DRIVE	1	1722835M1	0102161
12	KNIFE UP TO 8.5 FEET (2.5 M)	1	402607M1	1202193
12	KNIFE FROM 10 FEET (2.2 M)	1	410959M1	0102184
13	REEL DRIVE	1	1604401M1	0101285
15	FANNING MILL	1	621262M1	0101099
16	OUTLET	1	90598	0123153
17	REEL DRIVE VARIABLE SPEED	1	916854	1401304
18	TRACTION (LOWER)	1	417995	0111213
19	TRACTION (UPPER)	1	401109M1	0111241

307 OLD

			OE	
1	REEL DRIVE	1	916833M1	0111123
2	KNIFE DRIVE (UPPER)	1	417972M1	1430213
3	TRACTION VARIATOR DRIVE	1	905920M1	0111213
5	SHAKER SHOE DRIVE	1	621258M1	0101245
6	TRACTION VARIATOR DRIVE	1	905921M1	0111241
7	KNIFE DRIVE	1	1722835M1	0102161
7	KNIFE DRIVE	1	402607M1	1202193
8	HYDRAULIC PUMP DRIVE	1	1720647M1	0201109
9	BEATER - FAN (REAR)	1	621261M1	0201170
10	TANK UNLOADER DRIVE	1	1604055M1	0902122
11	FEEDER DRIVE	1	1724154M1	0202209
12	FAN CLEANING	1	621262M1	0101099
14	BEATER (REAR)	1	418232M1	0139325

400

			OE	
1	FANNING MILL	1	784797M2	1601103
2	TANK UNLOADER DRIVE	1	228813M1	1902120
3	FANNING MILL (UPPER)	1	1855008M1	1602150
5	HYDRAULIC PUMP DRIVE	1	832490M1	1537168
6	ALTERNATOR DRIVE	1	893575M1	0372231
7	DRIVE	1	793863M1	0785283
8	MAIN BELT	1	793861M1	0142225
9	MULTI FLOW	1	/	/
10	RETURN DRIVE	1	795514M4	1201153
10	RETURN DRIVE	1	832538M1	0101156
11	SHAKER SHAFT DRIVE	1	1615254M1	0202320
11	SHAKER SHAFT DRIVE	1	320593M2	2604348
12	ELEVATOR DRIVE GRAIN	1	784796M2	0302281
15	REDUCER	1	789853M1	0310109
15	REDUCER	1	603719M1	0110126
15	REDUCER	1	785806M2	0310109
16	KNIFE DRIVE	1	785585M1	0102174
17	REEL DRIVE	1	1615333M1	0702295
17	REEL DRIVE	1	785810M1	1201291
17	REEL DRIVE	1	790839M1	0202332

400 - 500

			OE	
1	RADIATOR FAN DRIVE	1	228722M1	1601103
2	RADIATOR FAN DRIVE	1	233950M1	0101099
3	HYDRAULIC PUMP DRIVE	1	832490M1	1537168
4	VENTILATOR	1	227976M1	1601103
5	BEATER DRIVE	1	228999M1	2001143
6	BEATER DRIVE	1	832538M1	0101156
7	STRAW SHAKER	1	227986M1	0201343
8	TANK OUTLET	1	228813M1	1902120
9	COUNTERSHAFT DRIVE	1	227457M1	1602150
10	HOPPER	1	227984M1	0102282
11	REEL DRIVE	1	790839M1	0202332
12	REEL DRIVE VARIABLE SPEED	1	790833M1	0110126
13	AFTER BEATER	1	227978M1	0185284
14	TRANSMISSION SHAFT	1	230356M1	0185308

MASSEY FERGUSON

400 - 500 OLD

			OE	
2	COUNTERSHAFT - REEL DRIVE	1	1855008M1	1602150
3	AUGER (GRAIN)	1	784796M1	0102282
4	MAIN DRIVE	1	793861M1	0142225
5	BEATER (REAR)	1	793863M1	0785283
6	REEL DRIVE	1	785810M1	1201291
6	REEL DRIVE	1	790839M1	0202332
7	REEL DRIVE VARIABLE SPEED	1	785806M1	0310109
7	REEL DRIVE VARIABLE SPEED	1	790833M1	0110126
8	RETURN ELEVATOR DRIVE	1	228999M1	2001143
8	RETURN ELEVATOR DRIVE	1	832538M1	0101156
9	RADIATOR AIR INTAKE	1	228722M1	1601103
10	STRAW WALKER DRIVE	1	1615254M1	0202320
10	STRAW WALKER DRIVE	1	227986M1	0201343
10	STRAW WALKER DRIVE	1	320593M2	2604348
12	TANK UNLOADER DRIVE	1	228813M1	1902120
14	FANNING MILL	1	784797M1	1601103
15	HYDRAULIC PUMP DRIVE	1	230350M1	1472238
15	HYDRAULIC PUMP DRIVE	1	832490M1	1537168
16	RADIATOR FAN DRIVE	1	233950M1	0101099

410 - 415

			OE	
1	FANNING MILL	1	784797M2	1601103
2	TANK UNLOADER DRIVE	1	228813M1	1902120
3	FANNING MILL (UPPER)	1	1855008M1	1602150
5	HYDRAULIC PUMP DRIVE	1	832490M1	1537168
6	ALTERNATOR DRIVE	1	893575M1	0372231
7	DRIVE	1	793863M1	0785283
8	MAIN BELT	1	793861M1	0142225
9	MULTI FLOW	1	785676M2	0101372
10	RETURN DRIVE	1	795514M4	1201153
10	RETURN DRIVE	1	795582M2	0301141
11	SHAKER SHAFT DRIVE	1	1615254M1	0202320
12	ELEVATOR DRIVE GRAIN	1	784796M2	0302281
15	REDUCER	1	603719M1	0110126
16	KNIFE DRIVE	1	785585M3	0102174
17	REEL DRIVE	1	1615254M1	0202320
17	REEL DRIVE	1	1615333M1	0702295

410 - 415 -510 - 515 OLD

			OE	
2	COUNTERSHAFT - REEL DRIVE	1	1855008M1	1602150
3	AUGER (GRAIN)	1	784796M1	0102282
4	MAIN DRIVE	1	793862M1	0185306
5	BEATER (REAR)	1	793863M1	0785283
6	REEL DRIVE	1	1615333M1	0702295
6	REEL DRIVE	1	790839M1	0202332
7	REEL DRIVE VARIABLE SPEED	1	785806M1	0310109
7	REEL DRIVE VARIABLE SPEED	1	790833M1	0110126
8	RETURN ELEVATOR DRIVE	1	795514M4	1201153
8	RETURN ELEVATOR DRIVE	1	795582M1	0301141
9	RADIATOR AIR INTAKE	1	228722M1	1601103
10	STRAW WALKER DRIVE	1	1615254M1	0202320
12	TANK UNLOADER DRIVE	1	228813M1	1902120
14	FANNING MILL	1	784797M1	1601103
15	HYDRAULIC PUMP DRIVE	1	230350M1	1472238
15	HYDRAULIC PUMP DRIVE	1	832490M1	1537168
16	RADIATOR FAN DRIVE	1	233950M1	0101099
17	KNIFE DRIVE	1	785585M3	0102174
18	MULTI FLOW	1	785676M2	0101372

410 - 510

			OE	
1	ENGINE FAN DRIVE	1	240575M2	0101099
2	HYDRAULIC PUMP DRIVE	1	832490M1	1537168
3	AIR FILTER	1	228722M1	1601103
4	VENTILATOR	1	227976M1	1601103
5	BEATER (REAR)	1	795514M1	1201153
6	HYDRAULIC PUMP DRIVE	1	230381M1	0102108
7	TANK OUTLET	1	228813M1	1902120
8	VENTILATOR	1	227457M1	1602150
9	HOPPER	1	227984M1	0102282
10	REEL DRIVE	1	1615333M1	0702295
11	RETURN ELEVATOR DRIVE	1	796487M1	0202320
12	REEL DRIVE	1	790839M1	0202332
13	REEL DRIVE VARIABLE SPEED	1	785806M1	0310109
14	REEL DRIVE VARIABLE SPEED	1	790833M1	0110126
15	MAIN TRANSMISSION	1	230356M2	0185308
16	MAIN TRANSMISSION	1	233213M2	☎
17	DRUM DRIVE	1	240447M1	☎

440

			OE	
1	TABLE FEEDER DRUM	1	621588M1	0702225
2	TANK UNLOADER DRIVE	1	1604055M1	0902122
3	FANNING MILL (UPPER)	1	621261M1	0201170
4	HYDRAULIC PUMP DRIVE	1	/	/
5	BEATER DRIVE	1	1720255M1	0124297
6	FANNING MILL	1	/	/
7	STRAW WALKER SHAKER	1	612258M1	0101245
8	TRACTION (UPPER)	1	905921M1	0111241
9	TRACTION (LOWER)	1	905920M1	0111213
10	REDUCER	1	916833M1	0111123
11	AUGER DRIVE (FRONT)	1	/	/
12	KNIFE DRIVE	1	410959M1	0102184
13	REEL DRIVE	1	1604401M1	0101285
15	FANNING MILL	1	621262M1	0101099

487 - 506 - 507

			OE	
1	TABLE FEEDER DRUM	1	621588M1	0702225
2	TANK UNLOADER DRIVE	1	905980M1	0123153
3	FANNING MILL (UPPER)	1	621261M1	0201170
4	HYDRAULIC PUMP DRIVE	1	1720674M1	0202235
5	BEATER DRIVE	1	1720255M1	0124297
6	FANNING MILL	1	/	/
7	SHAKER STRAW WALKER	1	621258M1	0101245
8	TRACTION (UPPER)	1	621320M2	0112247
8	TRACTION (UPPER)	1	905981M2	0312284
9	TRACTION (LOWER)	1	621231M2	0112223
9	TRACTION (LOWER)	1	905982M1	0112208
10	REDUCER	1	417972M1	1430213
10	REDUCER	1	905447M1	0111116
10	REDUCER	1	905481M1	0101321
11	AUGER (FRONT)	1	418209M1	0302134
12	KNIFE	1	402607M1	1202193
12	KNIFE	1	410959M1	0102184
13	REEL DRIVE	1	/	/
14	DRUM DRIVE	1	621646M1	0112188
15	FANNIING MILL	1	621262M1	0101099

487 OLD

			OE	
1	SHAKER SHOE DRIVE	1	621258M1	0101245
2	BEATER - FAN (REAR)	1	621261M1	0201170
3	FANNING MILL	1	417797M1	0101099
4	TRACTION VARIATOR DRIVE	1	621320M2	0112247
5	TRACTION VARIATOR DRIVE	1	621321M2	0112223
6	KNIFE DRIVE (UPPER)	1	417972M1	1430213
7	FEEDER DRIVE	1	1720488M1	0202230
8	KNIFE DRIVE	1	402607M1	1202193
9	FEEDER AUGER	1	1722835M1	0102161
10	TANK UNLOADER DRIVE	1	621259M1	0902122
11	BEATER (REAR)	1	1720255M1	0124297
12	CYLINDER VARIATOR DRIVE	1	621646M1	0112188
13	HYDRAULIC PUMP DRIVE	1	1720674M2	0201109

MASSEY FERGUSON

500

			OE	
1	FANNING MILL	1	784797M2	1601103
2	TANK UNLOADER DRIVE	1	228113M1	1901115
3	FANNING MILL (UPPER)	1	1855008M1	1602150
4	BEATER DRIVE	1	226981M1	1912195
5	HYDRAULIC PUMP DRIVE	1	230381M1	0102108
6	ALTERNATOR DRIVE	1	893575M1	0372231
7	DRIVE	1	793863M1	0785283
8	MAIN BELT	1	793862M1	0185306
9	MULTI FLOW	1	/	/
10	RETURN DRIVE	1	228999M1	2001143
10	RETURN DRIVE	1	832538M1	0101156
11	SHAKER SHAFT DRIVE	1	320593M2	2604348
12	ELEVATOR DRIVE GRAIN	1	784796M2	0302281
13	TRACTION DRIVE (UPPER)	1	834110M1	0112212
14	TRACTION DRIVE (LOWER)	1	834174M1	0112170
15	REDUCER	1	603719M1	0110126
15	REDUCER	1	790833M1	0110126
16	KNIFE DRIVE	1	/	/
17	REEL DRIVE	1	790839M1	0202332

506 OLD

			OE	
1	SHAKER SHOE DRIVE	1	621258M1	0101245
2	BEATER - FAN (REAR)	1	621261M1	0201170
3	FANNING MILL	1	621262M1	0101099
4	TRACTION VARIATOR DRIVE (UPPER)	1	621320M2	0112247
5	TRACTION VARIATOR DRIVE (LOWER)	1	621321M2	0112223
6	KNIFE DRIVE (UPPER)	1	417972M1	1430213
7	FEEDER DRIVE	1	621588M1	0702225
8	KNIFE DRIVE	1	402607M1	1202193
9	FEEDER AUGER	1	410959M1	0102184
10	TANK UNLOADER DRIVE	1	905980M1	0123153
11	BEATER (REAR)	1	1720255M1	0124297
12	CYLINDER VARIATOR DRIVE	1	621646M1	0112188
13	HYDRAULIC PUMP DRIVE	1	1720674M1	0202235

507 OLD

			OE	
1	SHAKER SHOE DRIVE	1	621258M1	0101245
2	TRACTION VARIATOR DRIVE	1	905981M1	0312284
3	TRACTION VARIATOR DRIVE	1	905982M1	0112208
4	BEATER (REAR)	1	1720205M3	0724340 EE-TECH
5	CYLINDER VARIATOR DRIVE	1	621646M1	0112188
6	BEATER (REAR)	1	621261M1	0201170
7	FANNING MILL	1	621262M1	0101099
8	FEEDER DRIVE	1	621588M1	0702225
9	TANK UNLOADER DRIVE	1	905980M1	0123153
10	HYDRAULIC PUMP DRIVE	1	1720674M2	0201109
11	REEL DRIVE	1	905481M1	0101321
12	REEL DRIVE VARIABLE SPEED	1	905447M1	0111116
13	KNIFE DRIVE	1	410959M1	0102184

510 - 515

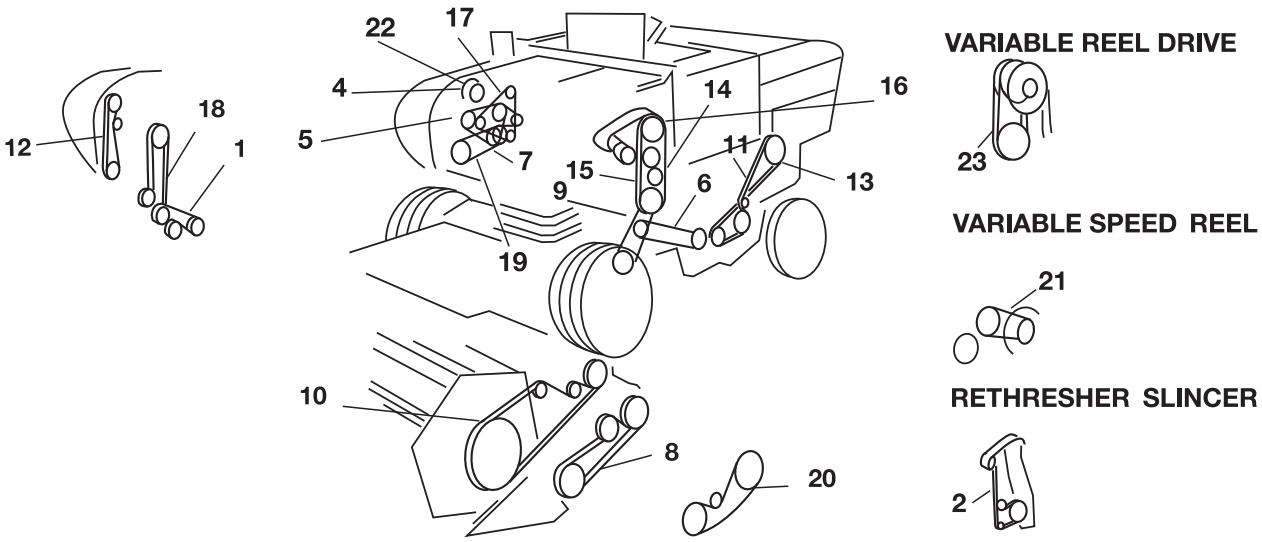

			OE	
1	FANNING MILL	1	784797M2	1601103
2	TANK UNLOADER DRIVE	1	228813M1	1902120
3	FANNING MILL (UPPER)	1	1855008M1	1602150
4	BEATER DRIVE	1	226981M1	1912195
5	HYDRAULIC PUMP DRIVE	1	230381M1	0102108
6	ALTERNATOR DRIVE	1	893575M1	0372231
7	DRIVE	1	793863M1	0785283
8	MAIN BELT	1	793862M1	0185306
9	MULTI FLOW	1	/	/
10	RETURN DRIVE	1	795514M4	1201153
10	RETURN DRIVE	1	795582M2	0301141
11	SHAKER SHAFT DRIVE	1	1615254M1	0202320
12	ELEVATOR DRIVE GRAIN	1	784796M2	0302281
13	TRACTION DRIVE (UPPER)	1	834110M1	0112212
14	TRACTION DRIVE (LOWER)	1	834174M1	0112170
15	REDUCER	1	603719M1	0110126
16	KNIFE DRIVE	1	785585M3	0102174
17	REEL DRIVE	1	1615254M1	0202320
17	REEL DRIVE	1	1615333M1	0702295

520 - 525

			OE	
1	ENGINE FAN DRIVE	1	619192M1	0172230
2	DRUM DRIVE	1	912877M1	0270259
3	DRIVE RIGHT SIDE	1	227976M1	1601103
4	AIR ASPIRATOR	1	783907M1	0201123
5	RETURN ELEVATOR DRIVE	1	795582M1	0301141
6	LIFT DRIVE HIGH SPEED	1	795514M1	1201153
7	THRESHING DRIVE	1	619327M1	1424202
8	HYDRAULIC PUMP DRIVE	1	619595M1	1902102
9	OUTLET	1	619317M1	1402140
10	SUPPLEMENTARY DRIVE	1	789966M1	0202172
11	BLADE DRIVE	1	785585M1	0102174
12	AUGER DRIVE	1	227984M1	0102282
13	REEL DRIVE	1	796487M1	0202320
14	STRAW SHAKER	1	796487M1	0202320
15	REEL DRIVE VARIABLE SPEED	1	789853M1	0310109

520

			OE	
1	FANNING MILL	1	1616477M1	0101099
1	FANNING MILL	1	784797M2	1601103
2	TANK UNLOADER DRIVE	1	619317M2	2101138
3	FANNING MILL (UPPER)	1	785585M3	0102174
3	FANNING MILL (UPPER)	1	789853M1	0310109
5	HYDRAULIC PUMP DRIVE	1	782849M2	0102112
6	ALTERNATOR DRIVE	1	1446201M1	0372232
6	ALTERNATOR DRIVE	1	1604524M1	0372232
6	ALTERNATOR DRIVE	1	2614A158	0173234
6	ALTERNATOR DRIVE	1	2674B152	☎
6	ALTERNATOR DRIVE	1	893575M1	0372231
7	DRIVE	1	789967M1	0185284
8	MAIN BELT	1	789930M1	0185316
9	MULTI FLOW	1	784170M2	0101430
10	RETURN DRIVE	1	795514M4	1201153
10	RETURN DRIVE	1	795582M2	0301141
11	SHAKER SHAFT DRIVE	1	1615254M1	0202320
12	ELEVATOR DRIVE GRAIN	1	784796M2	0302281
15	REDUCER	1	789853M1	0310109
16	KNIFE DRIVE	1	785585M3	0102174
17	REEL DRIVE	1	1615333M1	0702295
17	REEL DRIVE	1	785810M1	1201291

MASSEY FERGUSON

520 - 525 - 620 - 625

			OE	
1	FANNING MILL	1	1616477M1	0101099
1	FANNING MILL	1	784797M2	1601103
2	TANK UNLOADER	1	619317M2	2101138
3	FANNING MILL UPPER	1	785585M3	0102174
3	FANNING MILL UPPER	1	789853M1	0310109
4	BEATER DRIVE	1	782835M1	0112185
4	BEATER DRIVE	1	783539M1	0112215
5	HYDRAULIC PUMP	1	782849M2	0102112
6	GENERATOR	1	1446201M1	0372232
6	GENERATOR	1	1604524M1	0372232
6	GENERATOR	1	2614A158	0173234
6	GENERATOR	1	2674B152	☎
6	GENERATOR	1	893575M1	0372231
7	DRIVE	1	789967M1	0185284
8	MAIN BELT	1	789930M1	0185316
9	MULTI FLOW	1	784170M2	0101430
10	RETURNS	1	795514M4	1201153
10	RETURNS	1	795582M2	0301141
11	SHAKER	1	1615254M1	0202320
12	GRAIN ELEVATOR	1	784796M2	0302281
13	TRACTION DRIVE (UPPER)	1	1616714M1	0812233
14	TRACTION DRIVE (LOWER)	1	1616715M1	0112166
15	REDUCER	1	789853M1	0310109
16	KNIFE	1	785585M3	0102174
17	REEL	1	1615333M1	0702295
17	REEL	1	785810M1	1201291

520 - 525 - 620 - 625 OLD

			OE	
1	TANK UNLOADING	1	619317M2	2101138
2	TRACTION VARI-DRIVE	1	1615715M1	0112166
3	HYDRAULIC PUMP	1	782849M2	0102112
3	HYDRAULIC PUMP	1	782850M2	0102108
4	RADIATOR AIR INTAKE	1	783907M1	0201123
5	CASCADE SEPARATOR	1	784170M2	0101430
6	2ND COUNTERSHAFT - GRAIN AUGER	1	784796M2	0302281
7	2ND COUNTERSHAFT - FAN	1	784797M2	1601103
8	KNIFE DRIVE	1	785585M3	0102174
9	2ND COUNTERSHAFT DRIVE	1	785585M3	0102174
10	REEL VARI-DRIVE	1	789853M1	0310109
11	PICK-UP REEL	1	1615333M1	0702295
11	REEL DRIVE	1	785810M1	1201291
12	REAR BEATER	1	789967M1	0185284
13	RETURNS ELEVATOR	1	795514M4	1201153
13	RETURNS ELEVATOR	1	795582M2	0301141
14	STRAW WALKER	1	1615254M1	0202320
15	TRACTION DRIVE	1	1616714M1	0812233
16	CYLINDER VARIATOR DRIVE	1	782835M1	0112185
16	CYLINDER VARIATOR DRIVE	1	783539M1	0112215
17	MAIN DRIVE	1	789930M1	0185316
17	MAIN DRIVE	1	789931M1	0185310

530 - 535

			OE	
1	FANNING MILL	1	1616447M1	0101099
1	FANNING MILL	1	784797M2	1601103
2	TANK UNLOADER	1	3370141M1	1923180
3	FANNING MILL UPPER	1	785585M3	0102174
4	BEATER DRIVE	1	783539M1	0112215
5	HYDRAULIC PUMP	1	/	/
6	GENERATOR	1	2614B156	1472236
7	DRIVE	1	789976M1	☎
8	MAIN BELT	1	789930M1	0185316
9	MULTI FLOW	1	795582M2	0301141
10	RETURN	1	795514M4	1201153
11	SHAKER	1	1615254M1	0202320
12	GRAIN ELEVATOR	1	784796M2	0302281
13	TRACTION DRIVE (UPPER)	1	1616714M1	0812233
14	TRACTION DRIVE (LOWER)	1	1616715M1	0112166
15	REDUCER	1	/	/
16	KNIFE	1	1724154M1	0202209
17	REEL	1	843313M1	0142167

MASSEY FERGUSON

530S - 560 - 565 - 660 - 665

			OE	
1	FANNING MILL	1	3043154M1	0109116
1	FANNING MILL	1	3043153M1	0109121
2	TANK UNLOADER	1	3370141M1	1923180
3	FANNING MILL UPPER	1	785585M3	0102174
4	BEATER DRIVE	1	782835M1	0112185
4	BEATER DRIVE	1	783539M1	0112215
5	HYDRAULIC PUMP	1	843313M1	0142167
6	GENERATOR	1	1687531M1	0372234
6	GENERATOR	1	2614B156	1472236
7	DRIVE	1	789967M1	0185284
8	MAIN BELT	1	789930M1	0185316
8	MAIN BELT	1	789931M1	0185310
9	MULTI FLOW	1	/	/
10	RETURN	1	795514M4	1201153
10	RETURN	1	795582M2	0301141
11	SHAKER	1	1615254M1	0202320
12	GRAIN ELEVATOR	1	784796M2	0302281
13	TRACTON DRIVE (UPPER)	1	1616714M1	0812233
14	TRACTION DRIVE (LOWER)	1	232511M2	1912177
15	REDUCER	1	789853M1	0310109
16	KNIFE	1	1724154M1	0202209
17	REEL	1	843313M1	0142167

540

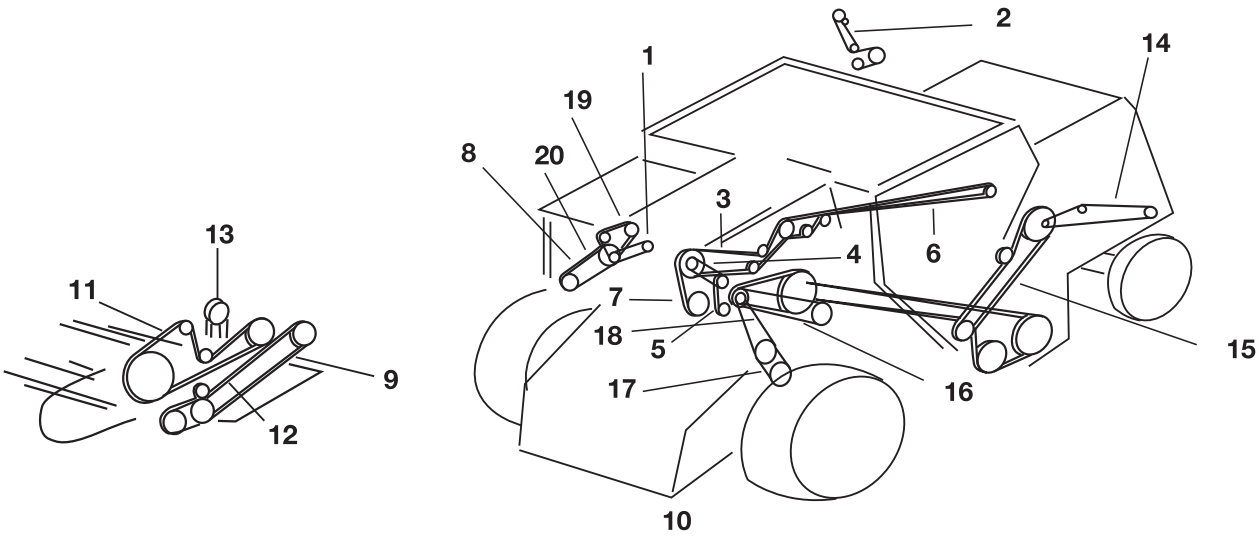

			OE	
0	PICK UP DRIVE	1	1047702M1	0302240
1	AIR CONDITIONING COMPRESSOR DRIVE	1	843045M1	0172221
2	AUXILIARY CYLINDER (SLINGER)	1	834332M1	0201191
3	CHOPPER DRIVE - HIGH SPEED	1	843760M1	1902376
3	CHOPPER DRIVE - LOW SPEED	1	843759M1	☎
4	CLEANING FAN DRIVE	1	832877M1	1901115
5	CLEANING FAN - COUNTERSHAFT	1	228997M1	☎
6	COUNTERSHAFT DRIVE	1	843758M1	☎
7	CYLINDER	1	832873M1	0112208
8	AIR INTAKE DRIVE	1	240575M2	0101099
9	KNIFE WOBBLE - 13 RIGID BAR HIGH SPEED	1	832085M1	0102184
9	KNIFE WOBBLE - FLOATING CUT BAR	1	833962M1	0202230
9	KNIFE WOBBLE - RIGID CUT BAR	1	834190M1	0202172
9	KNIFE WOBBLE - SPEED UP 15.16.18.20	1	843029M1	0102180
10	BEATER (REAR)OR STRAW CHOPPER	1	843747M1	0102419
11	REEL DRIVE	1	834140M1	0302281
12	REEL DRIVE COUNTERSHAFT	1	834139M1	0302146
13	REEL DRIVE VARIABLE SPEED	1	833768M1	0110106
14	STRAW SPREADER DRIVE	1	843742M1	2601323
15	STRAW WALKER DRIVE	1	832867M1	0201258
16	TANK UNLOADER DRIVE	1	832878M1	0102161
17	TRACTION (LOWER)	1	843732M2	☎
18	TRACTION (UPPER)	1	832790M3	☎
18	TRACTION (UPPER)	1	844091M1	☎
19	ALTERNATOR, FAN AND WATERPUMP DRIVE	1	532779M92	0372232
19	ALTERNATOR, FAN AND WATERPUMP DRIVE	1	844171M1	1473236
20	HYDRAULIC PUMP DRIVE	1	230380M1	0102112

MASSEY FERGUSON

550

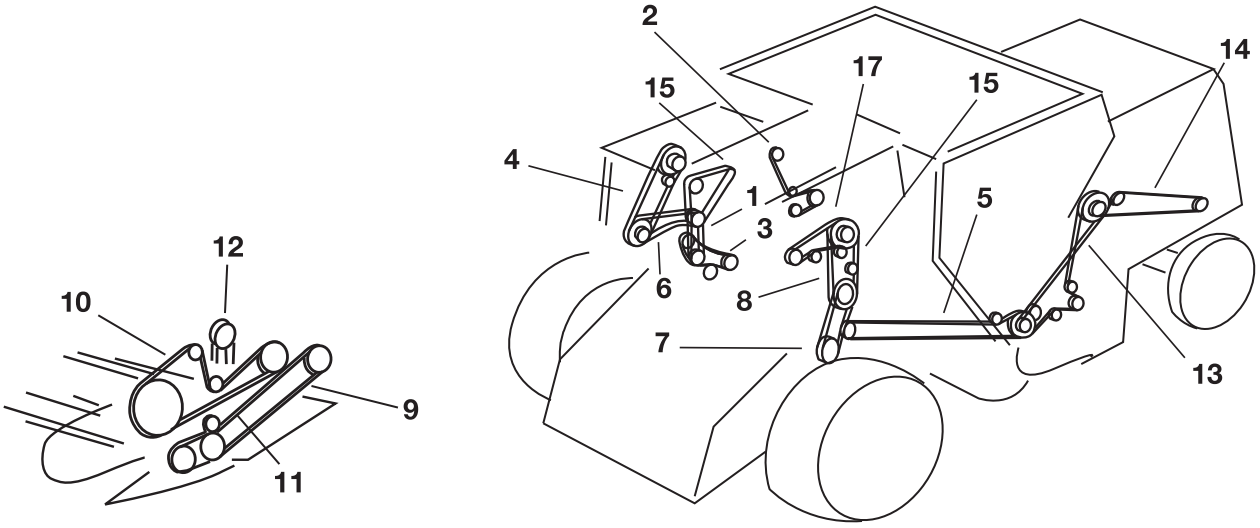

			OE	
0	PICK UP DRIVE	1	1047702M1	0302240
0	CHOPPER DRIVE	1	1051235M1	0102673
0	STRAW CHOPPER CORN KIT - LOW SPEED	1	842935M1	0102107
1	CLEANING FAN - COUNTERSHAFT	1	227457M1	1602150
2	AUXILIARY CYLINDER (SLINGER)	1	834332M1	0201191
3	CLEANING FAN DRIVE	1	227976M1	1601103
3	CLEANING FAN - HIGH SPEED	1	834492M2	0101099
5	AUGER (GRAIN)	1	227984M1	0102282
6	HYDRAULIC PUMP DRIVE	1	843737M1	1601103
7	TRACTION (LOWER) - 4 SPEED	1	230097M2	1912180
7	HYDROSTATIC DRIVE (LOWER)	1	834176M1	2624191
8	HYDROSTATIC DRIVE (UPPER)	1	834175M1	1224245
9	KNIFE WOBBLE - CENTERED CHAIN DRIVE	1	834058M1	0102174
9	KNIFE WOBBLE - RIGID CUT BAR	1	195671M1	0201177
9	KNIFE WOBBLE - FLOATING CUT BAR	1	833962M1	0202230
9	KNIFE WOBBLE - RIGID CUT BAR	1	834190M1	0202172
10	REEL DRIVE	1	834140M1	0302281
11	REEL DRIVE COUNTERSHAFT	1	834139M1	0302146
12	REEL DRIVE VARIABLE SPEED	1	833768M1	0110106
13	RETURN AUGER AND WALKER	1	227986M2	0201343
14	STRAW SPREADER (DUAL)	1	834254M1	0101291
15	TANK UNLOADER DRIVE	1	228813M3	1902120
16	ALTERNATOR, FAN AND WATERPUMP DRIVE	1	268847M91	1424250 EE-TECH
16	ALTERNATOR, FAN AND WATERPUMP DRIVE	1	532779M92	0372232
17	MAIN DRIVE	1	230556M4	☎

620 - 625

			OE	
1	DRIVE RIGHT SIDE	1	784797M1	1601103
2	RETURN ELEVATOR DRIVE	1	795582M1	0301141
3	LIFT DRIVE HIGH SPEED	1	795514M1	1201153
4	REEL DRIVE	1	785810M1	1201291
5	OUTLET	1	619317M1	1402140
6	BLADE DRIVE	1	785585M1	0102174
7	SUPPLEMENTARY DRIVE	1	785585M1	0102174
8	AUGER DRIVE	1	784796M1	0102282
9	REEL DRIVE	1	1615333M1	0702295
10	STRAW SHAKER	1	796487M1	0202320
11	REEL DRIVE VARIABLE SPEED	1	789853M1	0310109
12	THRESHING DRIVE	1	789931M1	0185310
13	DRUM DRIVE	1	789967M1	0185284

630 OLD - 630S OLD

			OE	
1	TANK UNLOADER DRIVE	1	324872M1	0101105
1	TANK UNLOADER DRIVE	1	402188M1	0101088
2	STRAW BALER	1	326586M3	0101468
3	FANNING MILL	1	321034M3	1401231
4	TABLE DRIVE	1	320595M2	0102112
4	TABLE DRIVE	1	322768M1	0102108
5	CYLINDER	1	320496M3	0139242
6	KNIFE DRIVE	1	320623M2	0301183
7	FEEDER AUGER	1	320596M1	1901133
8	TRACTION VARIATOR DRIVE	1	320551M1	0160312
9	HYDRAULIC PUMP DRIVE	1	410195M1	☎
10	STRAW WALKER DRIVE	1	320593M2	2604348

685 OLD - 685S OLD

			OE	
1	KNIFE DRIVE	1	402607M1	1202193
2	TRACTION VARIATOR DRIVE	1	401110M1	0111210
3	CYLINDER	1	402608M3	1439317
4	COUNTERSHAFT DRIVE	1	402603M1	1901251
5	TRACTION VARIATOR DRIVE	1	401109M1	0111241
6	STRAW WALKER DRIVE	1	401753M2	0101372
7	HYDRAULIC PUMP DRIVE (AUSTIN)	1	402188M1	0101088
7	HYDRAULIC PUMP DRIVE (PERKINS)	1	403041M1	0701095
8	RADIATOR FAN DRIVE	1	402177M1	0401111
9	TANK UNLOADER DRIVE	1	403071M1	0101156
10	STRAW BALER	1	328656M1	2330562
10	STRAW BALER	1	328681M1	2330592
11	FANNING MILL	1	402604M1	1901098
12	FANNING MILL	1	402605M1	0201155
13	BEATER (REAR)	1	402606M1	1902204
14	AUGER (GRAIN)	1	402354M1	1602150

750 - 755

			OE	
1	HYDRAULIC PUMP DRIVE (MECHANICAL SERIAL NR. 5387 - ...)	1	222882M2	0501121
1	HYDRAULIC PUMP DRIVE	1	842413M1	1301116
2	RADIATOR FAN (MECHANICAL SERIAL NR. 1979-5387)	1	259047M91	0168255
2	RADIATOR FAN DRIVE	2	265522M91	0200128
3	ALTERNATOR DRIVE	1	1687531M91	☎
3	ALTERNATOR DRIVE	1	844079M1	0372234
4	AIR CONDITIONING COMPRESSOR DRIVE	1	1686883M1	0272218
4	AIR CONDITIONING COMPRESSOR DRIVE (SERIAL NR. 9674 - ...)	1	834492M2	0101099
4	AIR CONDITIONING COMPRESSOR DRIVE (SERIAL NR. 9674 - ...)	1	843045M1	0172221
5	MAIN DRIVE	1	833874M1	0124258
6	AIR INTAKE DRIVE	1	216897M1	0300137
7	RETURN ELEVATOR DRIVE	1	833854M2	0101227
8	CYLINDER	1	833868M2	0112230
9	HYDROSTATIC REEL DRIVE	1	842845M1	0301155
10	STRAW CHOPPER (SERIAL NR. ... - 16539)	1	833871M1	1523244
10	STRAW CHOPPER (SERIAL NR. 16539 - ...)	1	843948M1	0111213
11	STRAW CHOPPER DRIVE	1	3172001M1	0102419
11	STRAW CHOPPER (SERIAL NR. ... - 16539)	1	832866M2	0102415
11	STRAW CHOPPER (SERIAL NR. 16539 - ...)	1	843747M1	0102419
12	STRAW CHOPPER DRIVE	1	843760M1	1902376
12	STRAW CHOPPER DRIVE (SERIAL NR. 16539 - ...)	1	832906M1	0202310
12	STRAW CHOPPER DRIVE (SERIAL NR. ... - 16539)	1	833872M1	0302313
13	STRAW SPREADER DRIVE	1	842110M1	0301373
14	STRAW WALKER DRIVE	1	843310M1	0101454
14	STRAW WALKER DRIVE	1	833855M1	1401412
15	SHAKER SHOE DRIVE	2	273757M91	0301301
16	SHAKER SHOE - COUNTERSHAFT - FAN (SERIAL NR. ... - 15716)	1	274015M91	0201177
16	SHAKER SHOE - COUNTERSHAFT - FAN (SERIAL NR. 15716 - ...)	2	281560M91	0201177
17	CLEANING FAN DRIVE	1	833863M1	0109123
17	CLEANING FAN - SMALL SEED KIT	1	842423M1	2609135
18	TRACTION (UPPER)	1	833856M1	0142259
18	TRACTION (UPPER)	1	833857M4	1912195
18	TRACTION (UPPER)	1	833858M4	0112200
18	HYDROSTATIC TRACTION DRIVE (UPPER)	1	844077M1	0122158
19	TRACTION (LOWER)	1	833858M4	0112200
19	TRACTION (LOWER)	1	833866M1	0142268
20	REEL DRIVE	1	834140M1	0302281
21	REEL DRIVE VARIABLE SPEED	1	833768M1	0110106
22	KNIFE WOBBLE DRIVE	1	834190M1	0202172
22	WOBBLE BOX DRIVE	1	842809M1	0302251
23	REEL DRIVE COUNTERSHAFT	1	834139M1	0302146
24	DISCHARGE DRIVE GRAIN TANK	1	833873M1	0123190

MASSEY FERGUSON

750 OLD

			OE	
1		1	834140M1	0302281
2	REEL DRIVE VARIABLE SPEED	1	833768M1	0110106
3	REEL DRIVE	1	834139M1	0302146
4	WOBBLE BOX DRIVE	1	834058M1	0102174
4	WOBBLE BOX DRIVE	1	842809M1	0302251
5	TRACTION DRIVE	1	833856M1	0142259
5	TRACTION DRIVE	1	833857M1	0112200
6	TRACTION DRIVE	1	833859M4	0112208
7	TRACTION DRIVE	1	833874M1	0124258
8	AIR INTAKE DRIVE	1	216897M1	0300137
9	DISCHARGE DRIVE GRAIN TANK	1	833873M1	0123190
10	COUNTERSHAFT - SHOE - FAN	1	842851M1	2301174
11	STRAW SPREADER DRIVE	1	842110M1	0301373
12	STRAW WALKER DRIVE	1	843310M1	0101454
12	STRAW WALKER DRIVE	1	833855M1	1401412
14	SHAKER SHOE DRIVE	1	842419M1	0301301
15	CLEANING FAN DRIVE	1	833863M3	☎
15	SMALL SEED KIT	1	842423M1	2609135
16	HYDRAULIC PUMP DRIVE	1	842413M1	1301116
16	HYDRAULIC PUMP DRIVE	1	222882M2	0501121
17	RADIATOR FAN DRIVE	1	273837M91	0372244
18	ALTERNATOR DRIVE (DIESEL ENGINE)	1	259047M91	0168255
18	RADIATOR FAN DRIVE	1	842383M1	0501121
18	RADIATOR FAN DRIVE	1	843008M1	2600124
19	AIR CONDITIONING COMPRESSOR DRIVE	1	834492M2	0101099
19	AIR CONDITIONING COMPRESSOR DRIVE	1	843045M1	0172221
20	HYDROSTATIC REEL DRIVE	1	842845M1	0301155
22	STRAW CHOPPER DRIVE	1	833871M1	1523244
23	STRAW CHOPPER DRIVE	1	832866M2	0102415
24	STRAW CHOPPER DRIVE	1	833872M1	0302313
24	STRAW CHOPPER DRIVE	1	843324M1	2602381
25	RETURN ELEVATOR DRIVE	1	833854M2	0101227

760

			OE	
1	REEL DRIVE	1	834139M1	0302146
2	SELECTOR	1	834058M1	0102174
3	REEL DRIVE	1	834140M1	0302281
4	STRAW CUTTER	1	832866M2	0102415
5	ALTERNATOR DRIVE II	1	273837M91	0372244
6	ALTERNATOR DRIVE II	1	521398M91	0173247
7	AIR ASPIRATOR	1	833867M1	0200109
8	ALTERNATOR DRIVE I	1	274252M91	0372245
9	FAN DRIVE	1	274339M91	2600124
10	STRAW CUTTER	1	833871M1	1523244
11	CENTRAL TRANSMISSION	1	833865M1	0225266
12	AIR CONDITIONING COMPRESSOR DRIVE	1	834492M2	0101099
13	HYDRAULIC PUMP DRIVE	1	842413M1	1301116
14	VENTILATOR	1	274015M91	0201177
15	ELEVATOR DRIVE UNIT	1	833854M2	0101227
16	BEATER DRIVE	2	273757M91	0301301
17	TANK OUTLET	1	833862M1	1423216
18	STRAW CUTTER	1	833872M1	0302313
19	STRAW SHAKER	1	833860M1	0102406
20	REEL DRIVE VARIABLE SPEED	1	833758M1	0103103
21	TRACTION DRIVE	1	833858M1	0112198
22	VENTILATOR	1	833863M1	0109123
23	HYDRAULIC PUMP DRIVE	1	833866M1	0142268

MASSEY FERGUSON

760 OLD

			OE	
1	REEL DRIVE	1	834140M1	0302281
2	REEL DRIVE VARIABLE SPEED	1	833768M1	0110106
3	REEL DRIVE	1	834139M1	0302146
4	WOBBLE BOX DRIVE	1	834058M1	0102174
4	WOBBLE BOX DRIVE	1	834190M1	0202172
4	WOBBLE BOX DRIVE	1	842809M1	0302251
5	TRACTION DRIVE	1	833858M4	0112200
5	HYDROSTATIC TRACTION DRIVE	1	833866M1	0142268
6	MAIN DRIVE	1	833865M1	0225266
7	AIR INTAKE DRIVE	1	833867M1	0200109
8	DISCHARGE DRIVE GRAIN TANK	1	833862M3	1423216
9	COUNTERSHAFT - SHOE - FAN	1	842851M1	2301174
10	STRAW SPREADER DRIVE	1	842110M1	0301373
11	STRAW WALKER DRIVE	1	833860M1	0102406
11	STRAW WALKER DRIVE	1	843302M1	0102449
12	SHAKER SHOE DRIVE	1	833863M3	☎
12	SHAKER SHOE DRIVE	1	842419M1	0301301
13	CLEANING FAN DRIVE	1	842423M1	2609135
14	HYDRAULIC PUMP DRIVE	1	842413M1	1301116
14	HYDRAULIC PUMP DRIVE	1	222882M2	0501121
14	HYDRAULIC PUMP DRIVE	1	842464M2	0102129
15	ALTERNATOR DRIVE	1	842417M1	0372245
16	ALTERNATOR DRIVE	1	521404M1	0173249
16	ALTERNATOR DRIVE	1	842796M1	0173245
17	RADIATOR FAN DRIVE	1	833869M1	0168232
17	RADIATOR FAN DRIVE	1	833870M1	1600100
17	RADIATOR FAN DRIVE	1	843008M1	2600124
18	AIR CONDITIONING COMPRESSOR DRIVE	1	834492M2	0101099
18	AIR CONDITIONING COMPRESSOR DRIVE	1	842463M1	1901098
18	AIR CONDITIONING COMPRESSOR DRIVE	1	843045M1	0172221
19	HYDROSTATIC REEL DRIVE	1	842845M1	0301155
21	STRAW CHOPPER DRIVE	1	833871M1	1523244
22	STRAW CHOPPER DRIVE	1	832866M2	0102415
23	STRAW CHOPPER DRIVE	1	833872M1	0302313
23	STRAW CHOPPER DRIVE	1	843324M1	2602381
24	RETURN ELEVATOR DRIVE	1	833854M2	0101227

760 - 765

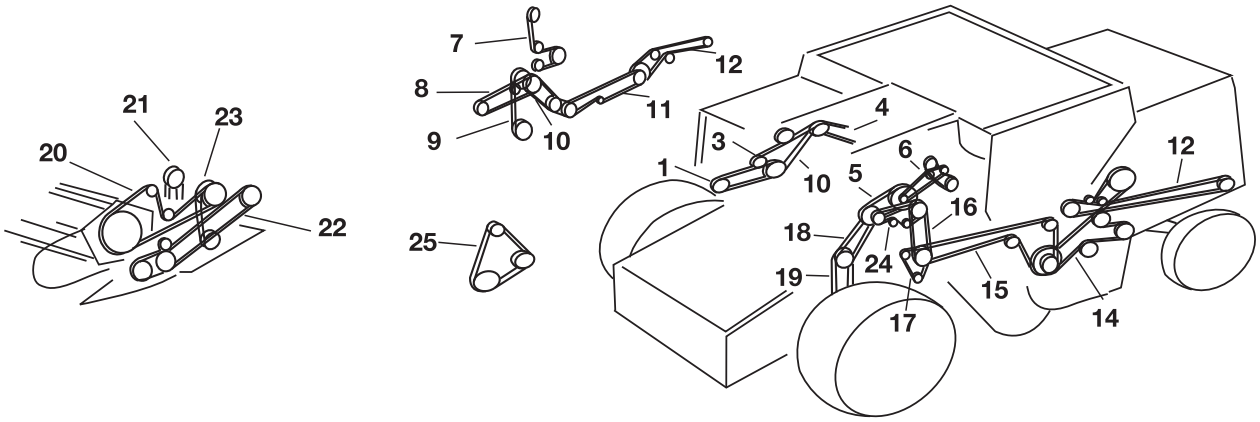

			OE	
1	HYDRAULIC PUMP DRIVE (SERIAL NR. 00511-2474)	1	222882M2	0501121
1	HYDRAULIC PUMP DRIVE (SERIAL NR. 2474 - ...)	1	842413M1	1301116
1	RADIATOR FAN DRIVE	1	833870M1	1600100
1	HYDRAULIC PUMP DRIVE (SERIAL NR. ... - 511)	1	842464M2	0102129
2	RADIATOR FAN DRIVE	1	259047M91	0168255
2	RADIATOR FAN DRIVE	1	833869M1	0168232
3	ALTERNATOR DRIVE	1	1687531M1	0372234
3	ALTERNATOR DRIVE	1	844079M1	0372234
4	AIR CONDITIONING COMPRESSOR DRIVE	1	1686883M1	0272218
4	AIR CONDITIONING COMPRESSOR DRIVE (SERIAL NR. 511-5829)	1	834492M1	0101099
4	AIR CONDITIONING COMPRESSOR DRIVE (SERIAL NR. ... - 511)	1	842463M1	1901098
4	AIR CONDITIONING COMPRESSOR DRIVE (SERIAL NR. 5829-7663)	1	843045M1	0172221
5	MAIN DRIVE	1	833865M1	0225266
6	AIR INTAKE DRIVE	1	833867M1	0200109
7	RETURN ELEVATOR DRIVE	1	833854M1	0101227
9	REEL DRIVE	1	842845M1	0301155
10	STRAW CHOPPER DRIVE (SERIAL NR. ... - 9413)	1	833871M1	1523244
10	STRAW CHOPPER DRIVE (SERIAL NR. 9413 - ...)	1	843948M1	0111213
11	STRAW CHOPPER DRIVE (SERIAL NR. ... - 9413)	1	832866M2	0102415
11	STRAW CHOPPER DRIVE (SERIAL NR. 9413 - ...)	1	843747M1	0102419
12	STRAW CHOPPER DRIVE	1	843760M1	1902376
12	STRAW CHOPPER DRIVE (SERIAL NR. 9413 - ...)	1	832906M1	0202310
12	STRAW CHOPPER DRIVE (SERIAL NR. ... - 9413)	1	833872M1	0302313
13	STRAW SPREADER DRIVE	1	842110M1	0301373
14	STRAW WALKER DRIVE	1	833860M1	0102406
15	SHAKER SHOE DRIVE	2	273757M91	0301301
16	SHAKER SHOE - COUNTERSHAFT - FAN (SERIAL NR. ... - 9413)	1	274015M91	0201177
16	SHAKER SHOE - COUNTERSHAFT - FAN (SERIAL NR. 9413 - ...)	2	281560M91	0201177
17	CLEANING FAN DRIVE	1	833863M1	0109123
17	CLEANING FAN - SMALL SEED KIT	1	842423M1	2609135
18	TRACTION (UPPER) - 4 SPEED	1	833858M4	0112200
18	HYDROSTATIC TRACTION DRIVE (UPPER)	1	833866M1	0142268
19	TRACTION (LOWER) - 4 SPEED	1	833858M4	0112200

760 - 765 (CONTINUED)

			OE	Gates
19	HYDROSTATIC TRACTION DRIVE (LOWER)	1	833866M1	0142268
20	REEL DRIVE	1	834140M1	0302281
21	REEL DRIVE VARIABLE SPEED	1	833768M1	0110106
22	KNIFE DRIVE - RIDIG CUT BAR 13 FEET	1	834058M1	0102174
22	WOBBLE BOX - WITH 30 FEET TABLE	1	210774M1	1202193
22	KNIFE WOBBLE - RIDIG CUT BAR WITH SPEED UP KIT	1	832085M1	0102184
22	KNIFE WOBBLE - FLOATING CUT BAR	1	833962M1	0202230
22	KNIFE WOBBLE RIDIG CUT BAR - 15 FEET - 24 FEET	1	834190M1	0202172
22	WOBBLE BOX - WITH DRAPER TABLE	1	842809M1	0302251
23	REEL DRIVE COUNTERSHAFT	1	834139M1	0302146
24	DISCHARGE DRIVE GRAIN TANK	1	833862M3	1423216
24	ALTERNATOR DRIVE V8 ENGINE (SERIAL NR. 13173 - ...)	1	3040950M91	0372245
25	ALTERNATOR DRIVE V8 ENGINE (SERIAL NR. ... - 13173)	1	844163M1	0122155

850 - 855

			OE	
1	HYDRAULIC PUMP DRIVE	1	842413M1	1301116
2	RADIATOR FAN DRIVE	2	265522M91	0200128
3	ALTERNATOR DRIVE	1	844079M1	0372234
4	AIR CONDITIONING COMPRESSOR DRIVE (SERIAL NR. 25658 - ...)	1	1614372M1	☎
4	AIR CONDITIONING COMPRESSOR DRIVE	1	3386214M1	0172221
4	AIR CONDITIONING COMPRESSOR DRIVE	1	521110M1	0172216
4	AIR CONDITIONING COMPRESSOR DRIVE (SERIAL NR. ... - 25658)	1	529964M1	0272218
5	MAIN DRIVE - 3 BAND	1	833874M1	0124258
5	MAIN DRIVE - 4 BAND	1	844475M1	1125260
6	ROTARY SCREEN - COUNTERSHAFT	1	154097M1	0384340
7	RETURN ELEVATOR DRIVE	1	833854M2	0101227
8	CYLINDER DRIVE	1	833868M2	0112230
9	HYDROSTATIC REEL DRIVE	1	842845M1	0301155
10	STRAW CHOPPER (FRONT)	1	843948M1	0111213
11	STRAW CHOPPER (CENTER)	1	843747M1	0102419
12	STRAW CHOPPER (REAR)	1	843760M1	1902376
13	STRAW SPREADER (REAR)	1	842110M1	0301373
14	STRAW WALKER DRIVE	1	843310M1	0101454
15	SHAKER SHOE DRIVE	2	273757M91	0301301
16	SHAKER SHOE - COUNTERSHAFT - FAN	1	281560M1	0201177
17	CLEANING FAN DRIVE	1	833863M1	0109123
17	CLEANING FAN - SMALL SEED KIT	1	842423M1	2609135
18	TRACTION (UPPER) - 4 SPEED	1	833858M4	0112200
18	TRACTION (UPPER) (SERIAL NR. 27544 - ...)	1	833866M1	0142268
18	HYDROSTATIC TRACTION DRIVE (UPPER)	1	844077M1	0122158
19	TRACTION (LOWER) - 4 SPEED (SERIAL NR. 27544 - ...)	1	280071M1	☎
19	TRACTION (LOWER) - 4 SPEED	1	833859M4	0112208
19	HYDROSTATIC TRACTION DRIVE (LOWER)	1	833866M1	0142268
20	AIR INTAKE DRIVE	1	844307M1	☎
21	TANK UNLOADER DRIVE	1	833873M1	0123190
23	WOBBLE BOX - RIGID CUT BAR - SP. UP	1	195671M1	0201177
23	WOBBLE BOX - RIGID CUT BAR - 22 FEET - 24 FEET TABLE	1	210774M1	1202193
23	WOBBLE BOX - FLOATING CUT BAR 22 FEET	1	227455M1	0102250
23	WOBBLE BOX - FLOATING CUT BAR 15 FEET - 20 FEET	1	833962M1	0202230
23	WOBBLE BOX - RIGID CUT BAR 15 FEET - 20 FEET TABLE	1	834190M1	0202172
24	REEL DRIVE	1	834140M1	0302281
25	REEL DRIVE COUNTERSHAFT	1	834139M1	0302146
26	REEL DRIVE VARIABLE SPEED	1	833768M1	0110106

860 - 865

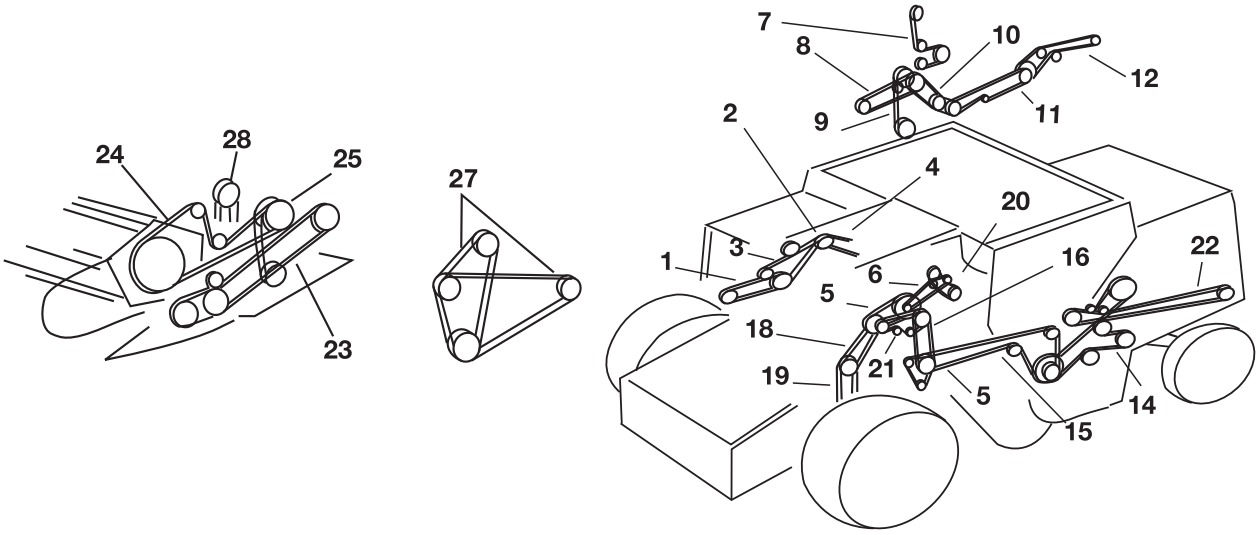

			OE	
1	HYDRAULIC PUMP DRIVE	1	842413M1	1301116
2	RADIATOR AND FAN DRIVE (SERIAL NR. ... - 16559)	1	259047M91	0168255
2	RADIATOR AND FAN DRIVE (SERIAL NR. 15558 - ...)	1	284633M91	0223515
3	ALTERNATOR DRIVE 6-CYLINDER ENGINE	1	844079M1	0372234
4	AIR CONDITIONING COMPRESSOR DRIVE	1	529964M1	0272218
5	MAIN DRIVE	1	833865M1	0225266
6	ROTARY SCREEN - COUNTERSHAFT	1	833867M1	0200109
7	RETURN ELEVATOR DRIVE	1	833854M2	0101227
9	HYDRAULIC REEL PUMP DRIVE	1	842845M1	0301155
10	STRAW CHOPPER (FRONT)	1	843948M1	0111213
11	STRAW CHOPPER (CENTER)	1	843747M1	0102419
12	STRAW CHOPPER (REAR) 102.5 INCH	1	843760M1	1902376
12	STRAW CHOPPER (REAR) 224 INCH	1	844496M1	☎
13	STRAW SPREADER (REAR)	1	842110M1	0301373
14	STRAW WALKER DRIVE	1	843302M1	0102449
15	SHAKER SHOE DRIVE	2	273757M91	0301301
16	SHAKER SHOE - COUNTERSHAFT - FAN	1	281560M1	0201177
17	CLEANING FAN DRIVE	1	833863M1	0109123
17	CLEANING FAN - SMALL SEED KIT	1	842423M1	2609135
18	TRACTION (UPPER) - 4 SPEED	1	833858M4	0112200
18	TRACTION (UPPER) (SERIAL NR. ... - 18278)	1	833866M1	0142268
18	TRACTION (UPPER) (SERIAL NR. 18277 - ...)	1	844336M1	☎
19	TRACTION (LOWER) - 4 SPEED (SERIAL NR. 19115 - ...)	1	833857M4	1912195
19	TRACTION (LOWER) - 4 SPEED (SERIAL NR. ... - 19115)	1	833858M4	0112200
19	TRACTION (LOWER) (SERIAL NR. ...-18278)	1	833866M1	0142268
19	TRACTION (LOWER) (SERIAL NR. 18278 - ...)	1	844336M1	☎
20	COUNTERSHAFT - ROTARY SCREEN	1	844306M1	1300104
21	TANK UNLOADER DRIVE	1	833862M3	1423216
22	WOBBLE BOX - FLOATING CUT BAR 22 FEET	1	227455M1	0102250

860 - 865 (CONTINUED)

			OE	
22	WOBBLE BOX - FLOATING CUT BAR 22 FEET	1	832832M1	0302241
22	WOBBLE BOX - FLOATING CUT BAR 15 FEET - 20 FEET	1	833962M1	0202230
23	WOBBLE BOX - RIGID CUT BAR 15 FEET - 20 FEET TABLE	1	195671M1	0201177
23	WOBBLE BOX - RIGID CUT BAR - 22 FEET - 24 FEET TABLE	1	210774M1	1202193
23	WOBBLE BOX DRIVE	1	834190M1	0202172
23	DRAPER TABLE	1	842809M1	0302251
24	REEL DRIVE	1	834140M1	0302281
25	REEL DRIVE COUNTERSHAFT	1	834139M1	0302146
27	ALTERNATOR AND WATERPUMP DRIVE 8V. ENGINE	1	844163M1	0122155

890 OLD - 890S - 892 OLD

			OE	
1	REEL DRIVE	1	211666M1	0102184
2	REEL DRIVE VARIABLE SPEED	1	210627M1	0101169
3	KNIFE DRIVE	1	611353M1	0302258
4	TANK UNLOADER DRIVE	1	610097M1	1902102
4	TANK UNLOADER DRIVE	1	610846M1	☎
5	TANK UNLOADER DRIVE	1	610841M1	0502215
6	TRACTION VARIATOR DRIVE	1	229863M1	2012167
7	BEATER (REAR)	1	610119M1	1981392
7	BEATER (REAR)	1	612938M1	☎
8	BEATER BEHIND CYLINDER	1	610506M1	2602194
9	STRAW SPREADER DRIVE	1	610842M1	0100272
10	STRAW WALKER DRIVE	1	GT5027	0104426
11	FANNING MILL	1	610470M1	0202209
12	RADIATOR FAN DRIVE	1	610813M1	0201177
12	RADIATOR FAN DRIVE	1	611588M1	1901188
12	RADIATOR FAN DRIVE	1	612563M1	2301174

3640

			OE	
1	USED WITH THE A6.358 ENGINE	1	3098153M1	0125296
1	USED WITH THE A6.354.4 ENGINE	1	3099829M1	0125299
2		1	3098211M2	0812262
3		1	1483277M1	1401248
3		1	3316647M1	0302258
4		1	1483880M1	0102112
5		1	1483881M1	0102184
5		1	227813M1	☎
5		1	418192M1	0102125
6		1	3175160M1	0102464
7	FOR USE WITH CORN HARVEST ONLY	1	3319791M1	0172211
7		1	3175109M1	0102328
8		1	2833904M3	0112182
8		1	3226971M1	0113191
8		1	3226972M1	1413193
11	USED WITH THE A6.358 ENGINE	1	1480826M1	1601120
11	USED WITH THE A6.354.4 ENGINE	1	2834466M1	0401111
12		1	1483884M1	0102231
15		1	1483882M1	0102129
19	USED WITH THE A6.354.4 ENGINE	1	3145238M1	0122155
19	USED WITH THE A6.358 ENGINE	1	487802M2	0422134
20		1	3098212M1	☎
21		1	3315897M1	0101242
22		1	3315896M1	☎
23		1	487802M2	0422134
24		1	3175529M1	☎

5650

			OE	
1		1	337014M1	1923180
2		1	785585M3	0102174
3		1	843313M1	0142167
4		1	1687531M1	0372234
5		1	2614B156	1472236
6		1	789967M1	0185284
7		1	789930M1	0185316
8		1	789931M1	0185310
9		1	795514M4	1201153
10		1	795582M2	0301141
11		1	1615254M1	0202320
12		1	784796M1	0102282
14		1	789853M1	0310109
15		1	1724154M1	0202209
16		1	843313M1	0142167
17		1	834190M1	0202172
18		1	834140M1	0302281
19		1	834139M1	0302146
20		1	230097M2	1912180
21		1	834175M1	1224245
22		1	834058M1	0102174
23		1	834058M1	0102174
24		1	2593000W1	0323233 EE-TECH
25		1	227455M1	0102250
26		1	101102M1	0123325
27		1	2634420W1	0285273
28		1	1764410W1	1272282
29		1	2634420W1	0285273
30		1	3098153M1	0125296
31		1	3099829M1	0125299
32		1	3319791M1	0172211
33		1	1480826M1	1601120
34		1	2834466M1	0401111
35		1	3145238M1	0122155
36		1	487802M2	0422134

7242

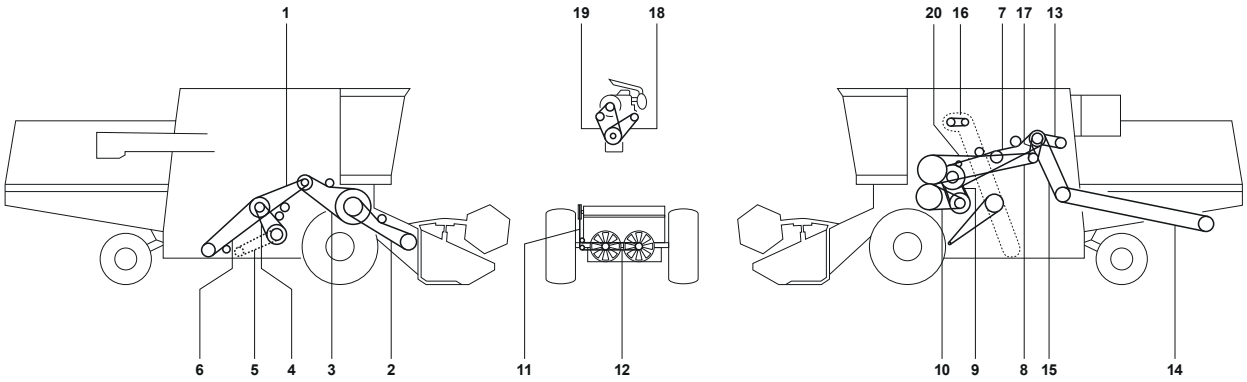

			OE	
1		2	26733588	0301217
2		2	41981700	0202285
3		1	26735939	1923287 EE-TECH
4		1	26733596	0301155
6		1	26733248	1401241
7		1	26732815	0324377
8		1	26732833	1402363
9		1	26733312	0714187
10		3	26733578	0101187
11		1	26732797	1537326
12		1	26733248	1401241
13		1	26732992	0172220
14		1	49030006	1523480
15		1	49030007	0227294
17		1	26732820	1527171
18		1	49030016	0373225
19		1	49030015	0173240
21		1	49030007	0227294
22		1	49030006	1523480

7274 (... - 61123)

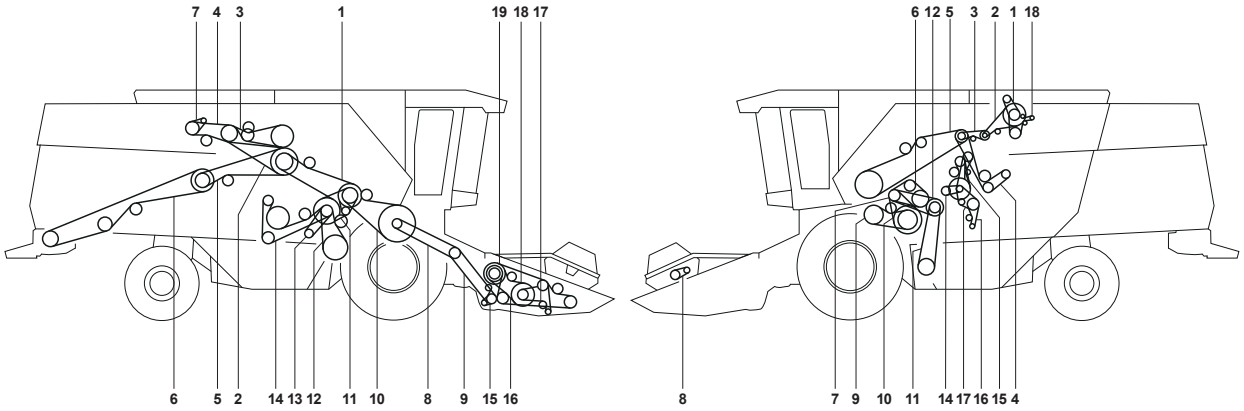

			OE	
1	(LEFT-SIDE)	1	41990027	0372223
2	(LEFT-SIDE)	1	41990019	0143222
3	(LEFT-SIDE)	1	28786813	0272247
4	(LEFT-SIDE)	1	41939300	0401279
5	(LEFT-SIDE)	1	41978800	0123398
6	(LEFT-SIDE)	1	41990007	1437204
7	(LEFT-SIDE)	1	41980500	0715190
8	(LEFT-SIDE)	1	42325700	Chain
9	(LEFT-SIDE)	3	41982300	0102181
10	(LEFT-SIDE)	1	41982000	2002190
11	(LEFT-SIDE)	1	41981100	0810228
11	(LEFT-SIDE)	1	41981400	0110242
12	(LEFT-SIDE)	1	41981200	0810190
13	(LEFT-SIDE)	1	41929000	2001143
14	(LEFT-SIDE)	1	42326200	Chain
15	(LEFT-SIDE)	1	42325100	Chain
15	(LEFT-SIDE)	1	42328600	Chain
16	(LEFT-SIDE)	1	42328100	☎
17	(LEFT-SIDE)	1	42328101	Chain
18	(LEFT-SIDE)	1	V685121585	1489286
19	(RIGHT-SIDE)	1	41990059	0226330 EE-TECH
20	(RIGHT-SIDE)	1	41990064	0149339
21	(RIGHT-SIDE)	1	41978100	0723264 EE-TECH
22	(RIGHT-SIDE)	1	41990045	0125211
23	(RIGHT-SIDE)	1	41979600	1623354
23	(RIGHT-SIDE)	1	41990049	0123366
24	(RIGHT-SIDE)	1	41977900	0223543
24	(RIGHT-SIDE)	1	41978400	0223526
25	(RIGHT-SIDE)	1	41904200	0272215
26	(RIGHT-SIDE)	1	42329300	Chain
27	(RIGHT-SIDE)	1	28273942	Chain
28	(RIGHT-SIDE)	1	41978800	0123398
29	(RIGHT-SIDE)	1	41990001	0119198

7274 (... - 61123) (CONTINUED)

			OE	
30	(RIGHT-SIDE)	1	41933900	0101184
31	(RIGHT-SIDE)	1	41921801	2687277
32	(RIGHT-SIDE)	1	41975300	2904308
33	(RIGHT-SIDE)	1	28273804	Chain
34	(RIGHT-SIDE)	1	41986300	1402307
35	(RIGHT-SIDE)	1	42332800	Chain
36	(RIGHT-SIDE)	1	28273950	Chain
37	(RIGHT-SIDE)	1	28274029	1824172

7278 (... - 61115)

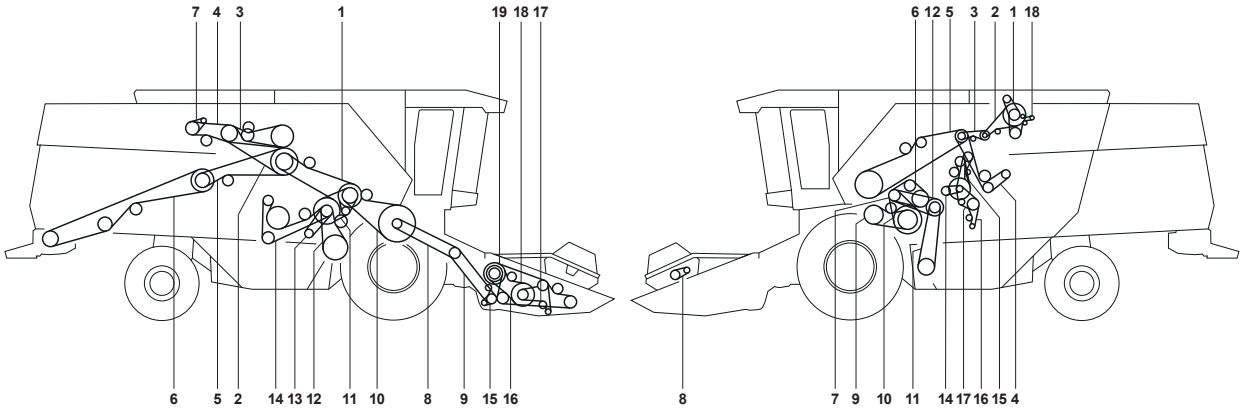

			OE	
1	(LEFT-SIDE)	1	41990027	0372223
2	(LEFT-SIDE)	1	41990019	0143222
3	(LEFT-SIDE)	1	28786813	0272247
4	(LEFT-SIDE)	1	41939300	0401279
5	(LEFT-SIDE)	1	41978800	0123398
6	(LEFT-SIDE)	1	41990007	1437204
7	(LEFT-SIDE)	1	41980500	0715190
8	(LEFT-SIDE)	1	42325700	Chain
9	(LEFT-SIDE)	3	41982300	0102181
10	(LEFT-SIDE)	1	41982000	2002190
11	(LEFT-SIDE)	1	41981100	0810228
11	(LEFT-SIDE)	1	41981400	0110242
12	(LEFT-SIDE)	1	41981200	0810190
13	(LEFT-SIDE)	1	41929000	2001143
14	(LEFT-SIDE)	1	42326200	Chain
15	(LEFT-SIDE)	1	42325100	Chain
15	(LEFT-SIDE)	1	42328600	Chain
16	(LEFT-SIDE)	1	42328100	☎
17	(LEFT-SIDE)	1	42328101	Chain
18	(LEFT-SIDE)	1	V685121585	1489286
19	(RIGHT-SIDE)	1	41990059	0226330 EE-TECH
20	(RIGHT-SIDE)	1	41990064	0149339
21	(RIGHT-SIDE)	1	41978100	0723264 EE-TECH
22	(RIGHT-SIDE)	1	41990045	0125211
23	(RIGHT-SIDE)	1	41979600	1623354
23	(RIGHT-SIDE)	1	41990049	0123366
24	(RIGHT-SIDE)	1	41977900	0223543
24	(RIGHT-SIDE)	1	41978400	0223526
25	(RIGHT-SIDE)	1	41904200	0272215
26	(RIGHT-SIDE)	1	42329300	Chain
27	(RIGHT-SIDE)	1	28273942	Chain
28	(RIGHT-SIDE)	1	41978800	0123398
29	(RIGHT-SIDE)	1	41990001	0119198

7278 (... - 61115) (CONTINUED)

			OE	
30	(RIGHT-SIDE)	1	41933900	0101184
31	(RIGHT-SIDE)	1	41921801	2687277
32	(RIGHT-SIDE)	1	41975300	2904308
33	(RIGHT-SIDE)	1	28273804	Chain
34	(RIGHT-SIDE)	1	41986300	1402307
35	(RIGHT-SIDE)	1	42332800	Chain
36	(RIGHT-SIDE)	1	28273950	Chain
37	(RIGHT-SIDE)	1	28274029	1824172

8560

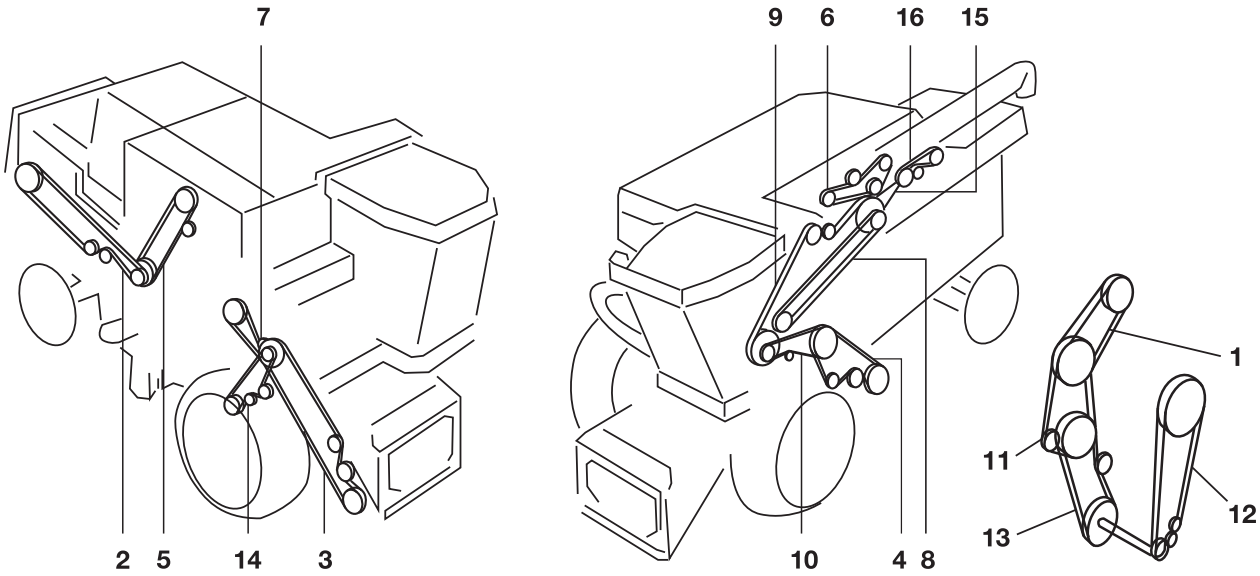

			OE	
1	AIR CONDITIONING COMPRESSOR DRIVE	1	525906M1	1472227
2	SPREADER DRIVE	1	168023W1	☎
2	CHOPPER DRIVE	1	178128W1	☎
3	TABLE DRIVE FEEDER	1	2621170W1	0124456
4	ELEVATOR DRIVE GRAIN	1	227455M1	0102250
5	JACKSHAFT - SPREADER	1	227455M1	0102250
6	PROPULSION PUMP DRIVE	1	9811830W2	0124204
7	RETURN ELEVATOR DRIVE	1	619760W1	☎
8	UNLOADING DRIVE	1	101102M1	0123325
9	BEATER DRIVE	1	624390W1	☎
10	SHAKER SHOE PITMAN DRIVE	1	2593000W1	0323233 EE-TECH
11	ALTERNATOR AND FAN DRIVE	1	2634420W1	0285273
12	ROTARY SCREEN DRIVE	1	1764410W1	1272282
13	ROTARY SCREEN - COUNTERSHAFT	1	2634420W1	0285273
14	FAN DRIVE VARIABLE SPEED	1	2612330W1	0709210
15	FEEDER IMPELLER DRIVE	1	1594240W1	1424276
16	ROTOR DRIVE	1	1669570W1	1424187

8570

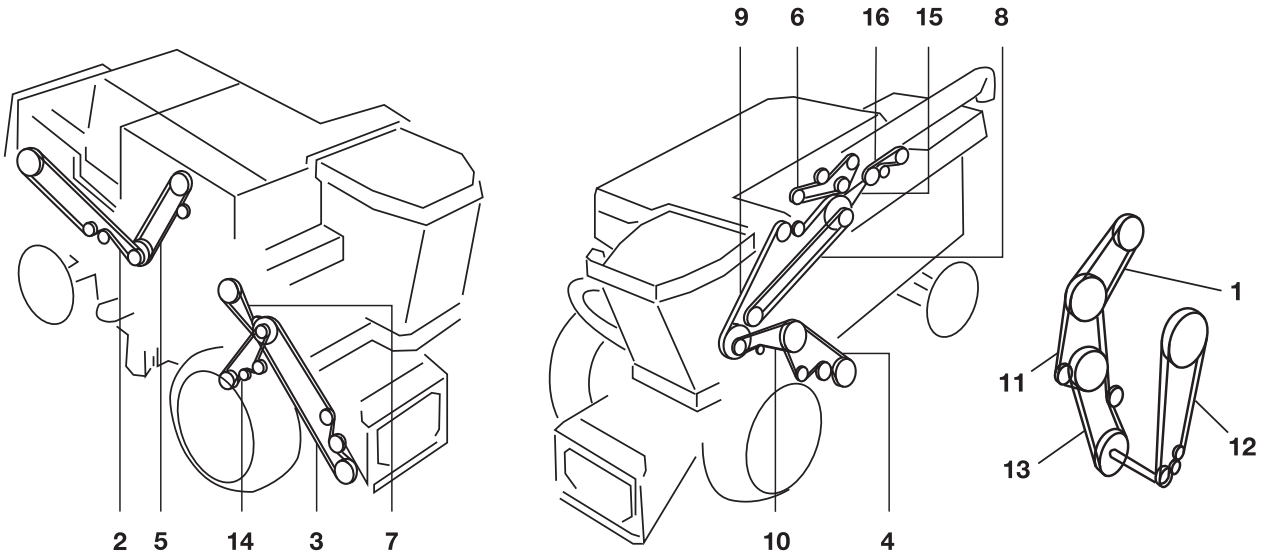

			OE	
1	AIR CONDITIONING COMPRESSOR DRIVE	1	531603M1	0372232
2	CHOPPER DRIVE	1	103320M1	0102406
2	SPREADER DRIVE	1	1680230W1	1401442
3	FEEDER DRIVE HIGH CAPACITY (4 RIB)	1	104072W1	0157530
3	STANDARD FEEDER DRIVE (REPL. 2621 170 W1)	1	108190W1	0124456
3	STANDARD FEEDER DRIVE (3 RIB)	1	2621170W1	0124456
4	ELEVATOR DRIVE GRAIN	1	227455M1	0102250
5	CHOPPER DRIVE - JACKSHAFT	1	103319M1	2002237
5	SPREADER JACKSHAFT DRIVE	1	227455M1	0102250
6	PROPULSION PUMP (240HP ENGINE)	1	104179W1	1424209
6	PROPULSION PUMP (220HP ENGINE)	1	9811830W2	0124204
7	RETURN ELEVATOR DRIVE	1	2619760W1	1901133
8	UNLOADING DRIVE	1	101102M1	0123325
9	BEATER DRIVE	1	2624390W1	0324377
10	SHAKER SHOE PITMAN DRIVE	1	2593000W1	0323233 EE-TECH
11	ALTERNATOR AND FAN DRIVE (SERIAL NR. ... - 45050296)	1	1076753M1	1885281
11	ALTERNATOR AND FAN DRIVE (SERIAL NR. 45050296 - ... AND 240HP ENG.)	1	111677W1	0785284
12	ROTARY SCREEN DRIVE	1	1764410W1	1272282
13	ROTARY SCREEN - COUNTERSHAFT (240HP ENGINE)	1	104259W1	1900097
13	ROTARY SCREEN - COUNTERSHAFT (220HP ENGINE)	1	2624080W1	0400100
14	FAN DRIVE VARIABLE SPEED	1	2612330W1	0709210
15	MAIN COUNTERSHAFT DRIVE (240HP ENGINE)	1	104180W1	1424282
15	MAIN COUNTERSHAFT DRIVE (220HP ENGINE)	1	1594240W1	1424276
16	ROTOR PUMP DRIVE	1	9811830W2	0124204

8590

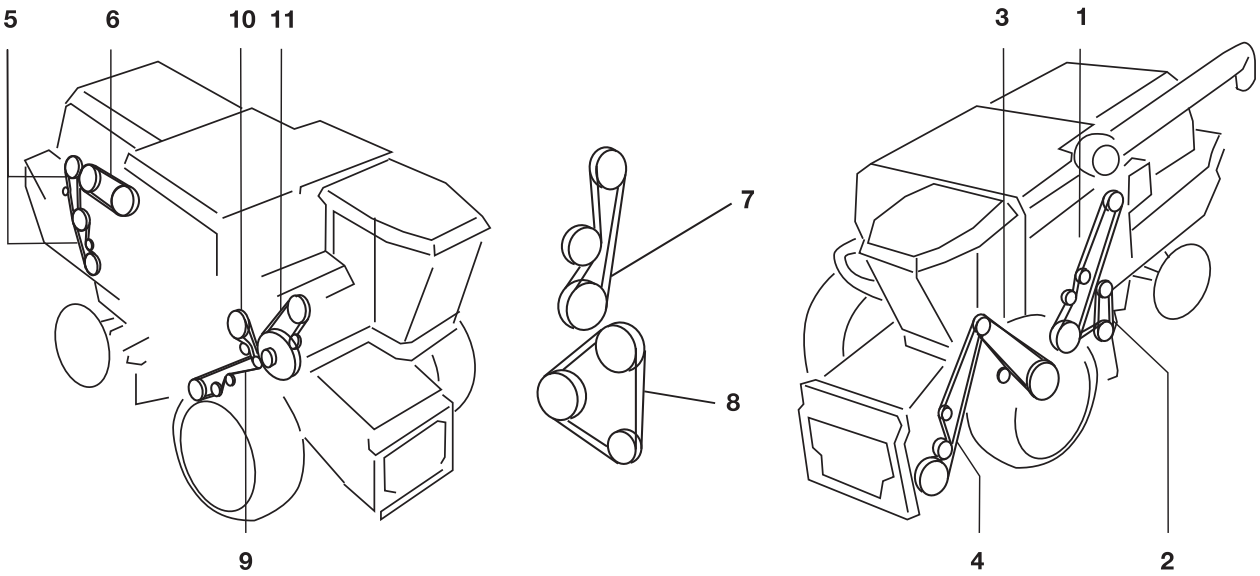

			OE	
1	UNLOADING DRIVE	1	2496110W1	0323437 EE-TECH
2	ELEVATOR DRIVE GRAIN	1	2439700W1	0302326
3	SHAKER SHOE PITMAN DRIVE	1	2439710W1	1423290
4	HEAD COUNTERSHAFT DRIVE	1	2523670W1	1824417
5	CHOPPER DRIVE	1	2553480W1	1602150
6	ROTOR DRIVE	1	2445370W1	1513221
7	STRAW SPREADER DRIVE	1	2543960W1	☎
8	STRAW SPREADER (SECONDARY)	1	2543970W1	0301118
9	CLEANING FAN DRIVE	1	2439720W1	2209296
10	RETURN ELEVATOR DRIVE	1	2492070W1	1824417
11	FEEDER IMPELLER DRIVE	1	1594240W1	1424276

8780

			OE	
1	FEEDER DRIVE	1	71379105	0757517
2	FAN DRIVE	1	2612330W1	0709210
3	ELEVATOR DRIVE UNIT (PRIOR TO MOTOR NR MJ87101)	1	2619760W1	1901133
3	ELEVATOR DRIVE UNIT (FOLLOWING MOTOR NR MJ87101)	1	71385801	0304214
5	CHOPPER DRIVE - 2ND STAGE (PRIOR TO MOTOR NR MJ87101)	1	103320M1	0102406
5	CHOPPER DRIVE - 2ND STAGE (FOLLOWING MOTOR NR MJ87101)	1	71388712	0102406
6	CHOPPER DRIVE PRIMARY	1	227455M1	0102250
6	CHOPPER DRIVE PRIMARY (PRIOR TO MOTOR NR MJ87101)	1	103319M1	2002237
6	CHOPPER DRIVE PRIMARY (FOLLOWING MOTOR NR MJ87101)	1	71385837	0302262
7	UNLOADING DRIVE	1	101102M1	0123325
8		1	1764410W1	1272282
9	REEL DRIVE	1	227455M1	0102250
10	PITMAN DRIVE	1	2593000W1	0323233 EE-TECH
11		1	104259W1	1900097
12	BEATER DRIVE	1	71386352	2024376
13		1	111677W1	0785284
14	MAIN COUNTERSHAFT DRIVE (PRIOR TO MOTOR NR MJ87101)	1	71385693	1424282
14	MAIN COUNTERSHAFT DRIVE (FOLLOWING MOTOR NR MJ87101)	1	71387775	0224306 EE-TECH
14	MAIN COUNTERSHAFT DRIVE	1	71379124	0757502
15	HYDRAULIC PUMP ROTOR DRIVE	1	111954W1	0757263
16	FAN DRIVE (PRIOR TO MOTOR NR MJ87101)	1	531603M1	0372232
16	FAN DRIVE (FOLLOWING MOTOR NR MJ87101)	1	71148120	0372232

8780XP

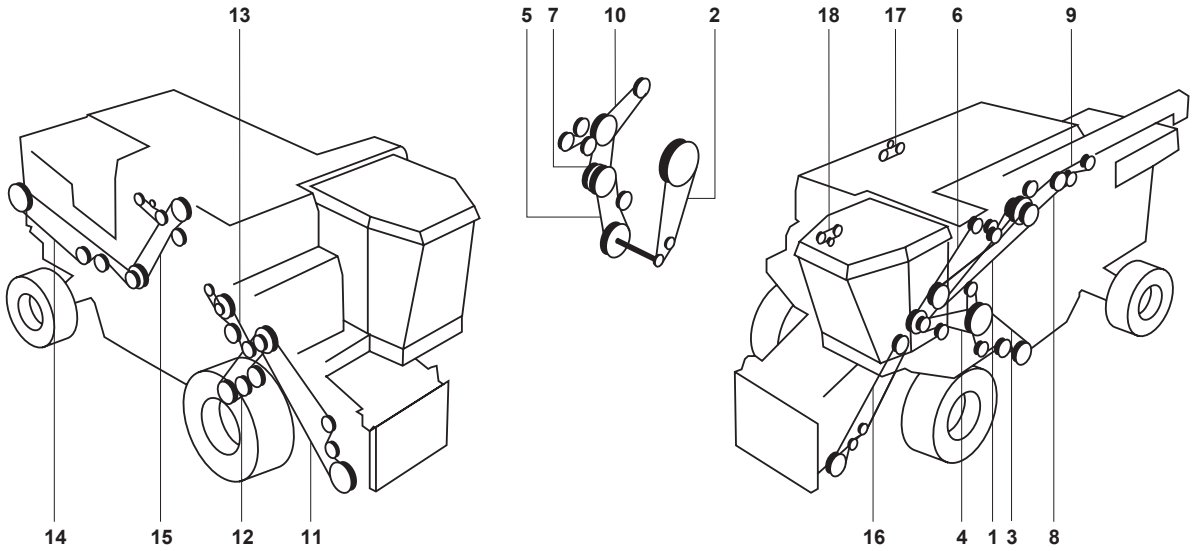

			OE	
1	UNLOADER DRIVE	1	101102M1	0123325
2	ROTARY SCREEN DRIVE	1	1764410W1	1272282
3	GRAIN ELEVATOR DRIVE	1	227455M1	0102250
4	SHAKER SHOE PITMAN DRIVE	1	2593000W1	0323233 EE-TECH
5	ROTARY SCREEN “C” SHAFT DRIVE	1	104259W1	1900097
6	BEATER DRIVE	1	71386352	2024376
7	ENGINE FAN DRIVE	1	111677W1	0785284
8	COUNTERSHAFT DRIVE	1	71387775	0224306 EE-TECH
9	PUMP DRIVE	1	111954W1	0757263
10	A/C COMPRESSOR DRIVE	1	71148120	0372232
11	FEEDER DRIVE	1	71379105	0757517
12		1	2612330W1	0709210
13	RETURN ELEVATOR DRIVE	1	71385801	0304214
14	CHOPPER DRIVE	1	71388712	0102406
14	SPREADER DRIVE	1	1680230W1	1401442
15	SPREADER JACKSHAFT DRIVE	1	227455M1	0102250
15	CHOPPER JACKSHAFT DRIVE	1	71385837	0302262

9690

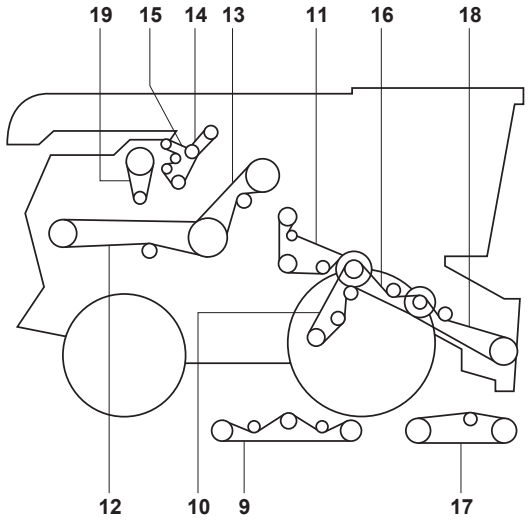

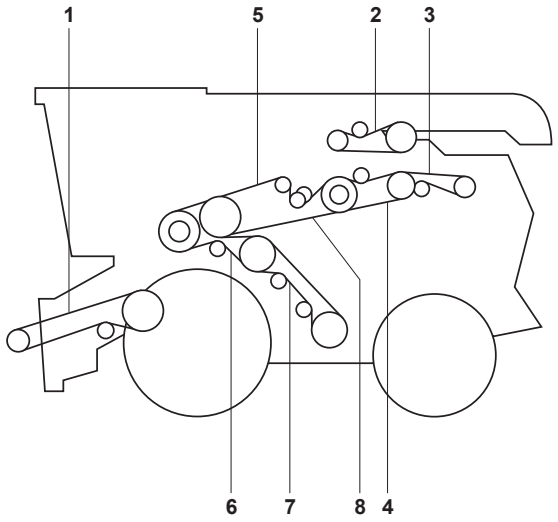

			OE	
1	FEEDER, PIVOT SHAFT (S/N HP87101 & ABOVE)	1	71398388	1402373
3	PUMP DRIVE, ROTOR (PRIOR TO S/N HR87101)	1	71418976	1425218
3	PUMP DRIVE, ROTOR (S/N HR87101 & ABOVE)	1	71418984	0125219
4	COUNTERSHAFT, MAIN	1	71390188	1524314 EE-TECH
5	BEATER DRIVE	1	71386352	2024376
6	SHAKER SHOE PITMAN	1	71390199	0323233 EE-TECH
7	GRAIN ELEVATOR DRIVE (PRIOR TO S/N HP87101)	1	227455M1	0102250
7	GRAIN ELEVATOR DRIVE (S/N HP87101 & ABOVE)	1	71403685	0302248
8	UNLOADER DRIVE	1	101102M1	0123325
9	HEADER COUNTERSHAFT, BEATER (PRIOR TO S/N HP87101)	1	71379105	0757517
10	CLEANING FAN, VARI-SPEED	1	71394352	0709234
11	RETURN ELEVATOR	1	71385801	0304214
12	CHOPPER (SECONDARY) (PRIOR TO S/N HR87101)	1	71388712	0102406
12	CHOPPER (SECONDARY) (S/N HR87101 & ABOVE)	1	71406339	0323448
12	SPREADER (SECONDARY)	1	1680230W1	1401442
13	CHOPPER (PRIMARY) (PRIOR TO S/N HR87101)	1	71385837	0302262
13	CHOPPER (PRIMARY) (S/N HR87101 & ABOVE)	1	71406361	1423301 EE-TECH
13	SPREADER (PRIMARY)	1	227455M1	0102250
14	A/C COMPRESSOR	1	71148120	0372232
15	FAN AND ALTERNATOR (PRIOR TO S/N HR87101)	1	A3289213	0385289
15	FAN AND ALTERNATOR (KIT) (PRIOR TO S/N HR87101)	1	A71410501	0285314
15	FAN AND ALTERNATOR (SISU) (S/N HR87101 AND ABOVE)	1	V685121585	1489286
15	FAN AND ALTERNATOR (SISU) (ENGINE S/N T11858 AND ABOVE)	1	V685121530	0189280
16	BEATER, FEEDERHOUSE JACKSHAFT (S/N HP87101 & ABOVE)	1	71398384	0127308
17	HEADER COUNTERSHAFT, VARI-SPEED (S/N HP87101 & ABOVE)	1	71399505	0313321
18	HEADER COUNTERSHAFT, FIXED SPEED (S/N HP87101 & ABOVE)	1	71399519	0144386
19	ROTARY SCREEN (S/N HR87101 & ABOVE)	1	71396754	1900132

9695

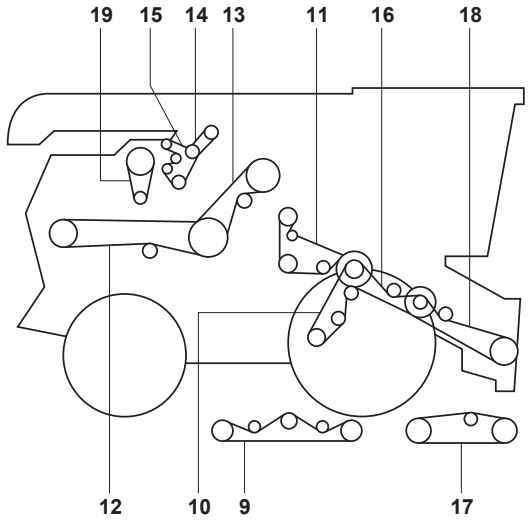

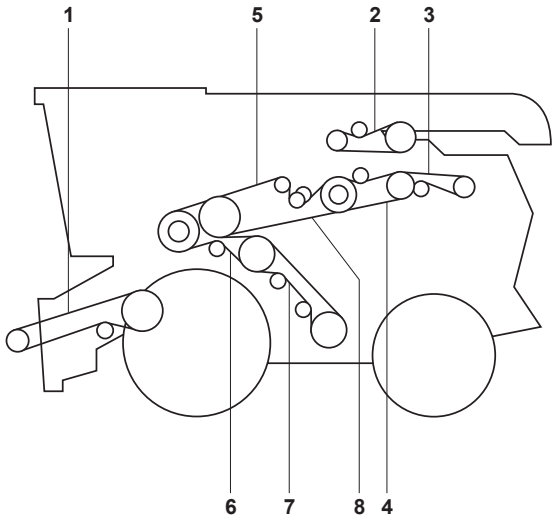

			OE	
1	FEEDER, PIVOT SHAFT (S/N HUC8101 & ABOVE)	1	71427255	1402373
3	PUMP DRIVE, ROTOR	1	71418984	0125219
4	COUNTERSHAFT, MAIN	1	71390188	1524314 EE-TECH
5	BEATER DRIVE	1	71388216	1425378 EE-TECH
6	SHAKER SHOE PITMAN	1	71390199	0323233 EE-TECH
7	GRAIN ELEVATOR DRIVE (S/N HUC8101 & ABOVE)	1	71410765	1923287 EE-TECH
8	UNLOADER DRIVE	1	71410767	1623311 EE-TECH
10	CLEANING FAN, VARI-SPEED	1	71394352	0709234
11	RETURN ELEVATOR	1	71385801	0304214
12	CHOPPER (SECONDARY)	1	71406339	0323448
12	SPREADER (SECONDARY)	1	1680230W1	1401442
13	CHOPPER (PRIMARY)	1	71406338	0123305
13	SPREADER (PRIMARY)	1	71414420	0202245
14	A/C COMPRESSOR	1	71148120	0372232
15	FAN & ALTERNATOR (SISU)	1	V685121530	0189280
15	FAN & ALTERNATOR (S/N BHC06101 & ABOVE)	1	71444986	0342200
16	BEATER, FEEDERHOUSE JACKSHAFT	1	71398384	0127308
17	HEADER COUNTERSHAFT, VARI-SPEED	1	71423444	1413320
18	HEADER COUNTERSHAFT, FIXED SPEED	1	71399519	0144386
19	ROTARY SCREEN	1	71396754	1900132

9720

			OE	
1	UNLOADING DRIVE	1	2496110W1	0323437 EE-TECH
1	HEAD COUNTERSHAFT DRIVE	1	31-253670	☎
2	ELEVATOR DRIVE GRAIN	1	2439700W1	0302326
2	PITMAN DRIVE	1	31-249710	☎
3	SHAKER SHOE PITMAN DRIVE	1	2439710W1	1423290
3	ELEVATOR DRIVE (PRIMARY) GRAIN	1	31-2439700	0302326
4	HEAD COUNTERSHAFT DRIVE	1	2523670W1	1824417
4	UNLOADING DRIVE (SECONDARY)	1	31-2496110	☎
5	CHOPPER DRIVE	1	2553480W1	1602150
5	ROTARY SCREEN DRIVE	1	31-2448930	2600155
6	ROTOR DRIVE	1	2445370W1	1513221
6	AIR CONDITIONING COMPRESSOR DRIVE	1	31-2498110	0372223
7	STRAW SPREADER DRIVE	1	2543960W1	☎
7	ALTERNATOR DRIVE	1	31-2403270	☎
8	STRAW SPREADER (SECONDARY)	1	2543970W1	0301118
8	WATERPUMP DRIVE	1	31-2414670	0422134
9	CLEANING FAN DRIVE	1	2439720W1	2209296
9	RADIATOR FAN AND COUNTERSHAFT DRIVE	1	31-2449290	1600168
10	RETURN ELEVATOR DRIVE	1	2492070W1	1824417
10	HYDRAULIC PUMP DRIVE	2	31-2604010	1401137
11	FEEDER IMPELLER DRIVE	1	1594240W1	1424276
11	HYDROSTATIC PUMP DRIVE	1	31-2449520	0125211
12	UNLOADING DRIVE (PRIMARY)	1	31-2605020	☎
13	THRESHING DRIVE	1	31-2404170	0325248
14	STRAW SPREADER (PRIMARY)	1	31-2543960	2101138
15	STRAW SPREADER (SECONDARY)	1	31-2543970	☎
16	CLEANING FAN DRIVE	1	31-2439720	☎
17	FEEDER IMPELLER DRIVE	1	31-1594240	2624278
18	RETURN ELEVATOR DRIVE	1	31-2492070	1901133
19	CHOPPER DRIVE - CROP	1	31-2553480	☎
20	ROTOR DRIVE	1	31-2445370	☎

9790

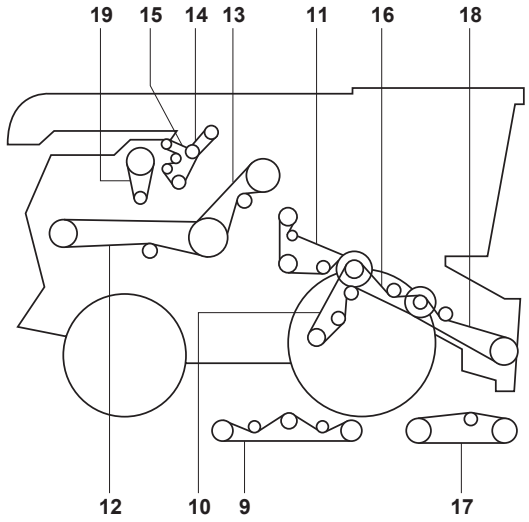

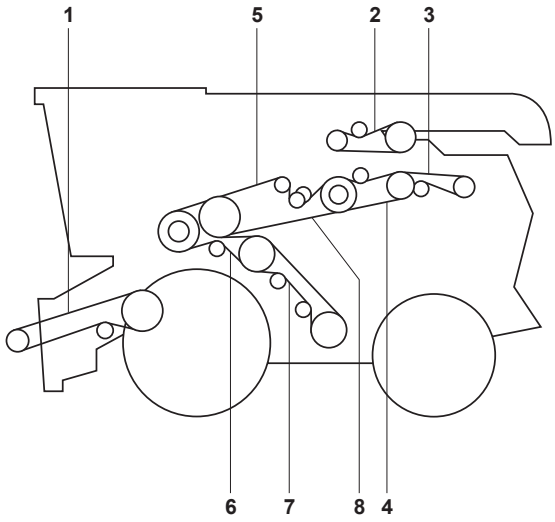

			OE	
1	FEEDER, PIVOT SHAFT (S/N HP36101 & ABOVE)	1	71398388	1402373
2	PUMP DRIVE, PROPEL (PRIOR TO S/N HR36101)	1	71418977	1424219
2	PUMP DRIVE, PROPEL (S/N HR36101 & ABOVE)	1	71418978	1224221
3	PUMP DRIVE, ROTOR	1	71418976	1425218
4	COUNTERSHAFT, MAIN	1	71390188	1524314 EE-TECH
5	BEATER DRIVE	1	71388216	1425378 EE-TECH
6	SHAKER SHOE PITMAN	1	71390199	0323233 EE-TECH
7	GRAIN ELEVATOR DRIVE (PRIOR TO S/N HP36101)	1	227455M1	0102250
7	GRAIN ELEVATOR DRIVE (S/N HP36101 & ABOVE)	1	71403685	0302248
8	UNLOADER DRIVE	1	101102M1	0123325
9	HEADER COUNTERSHAFT, BEATER (PRIOR TO S/N HP36101)	1	71379105	0757517
10	CLEANING FAN, VARI-SPEED	1	71394352	0709234
11	RETURN ELEVATOR	1	71385801	0304214
12	CHOPPER (SECONDARY) (PRIOR TO S/N HR36101)	1	71388712	0102406
12	CHOPPER (SECONDARY) (S/N HR36101 & ABOVE)	1	71406339	0323448
12	SPREADER (SECONDARY)	1	1680230W1	1401442
13	CHOPPER (PRIMARY) (PRIOR TO S/N HR36101)	1	71385837	0302262
13	CHOPPER (PRIMARY) (S/N HR36101 & ABOVE)	1	71406361	1423301 EE-TECH
13	SPREADER (PRIMARY)	1	227455M1	0102250
14	A/C COMPRESSOR	1	71148120	0372232
15	FAN & ALTERNATOR (PRIOR TO S/N HP36101)	1	A3289213	0385289
15	FAN & ALTERNATOR (KIT) (S/N HP36101-HP36999 & ABOVE)	1	A71410501	0285314
15	FAN & ALTERNATOR (SISU) (S/N HR36101 & ABOVE)	1	V685121585	1489286
15	FAN & ALTERNATOR (SISU) (ENGINE S/N T11858 & ABOVE)	1	V685121530	0189280
16	BEATER, FEEDERHOUSE JACKSHAFT (S/N HP36101 & ABOVE)	1	71398384	0127308
17	HEADER COUNTERSHAFT, VARI-SPEED (S/N HP36101 & ABOVE)	1	71399505	0313321
18	HEADER COUNTERSHAFT, FIXED SPEED (S/N HP36101 & ABOVE)	1	71399519	0144386
19	ROTARY SCREEN	1	71396754	1900132

9795

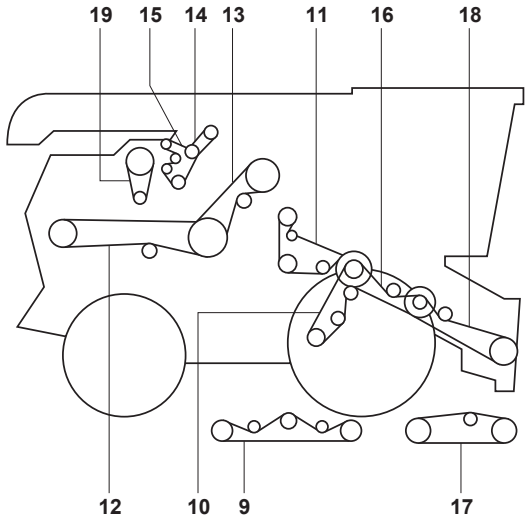

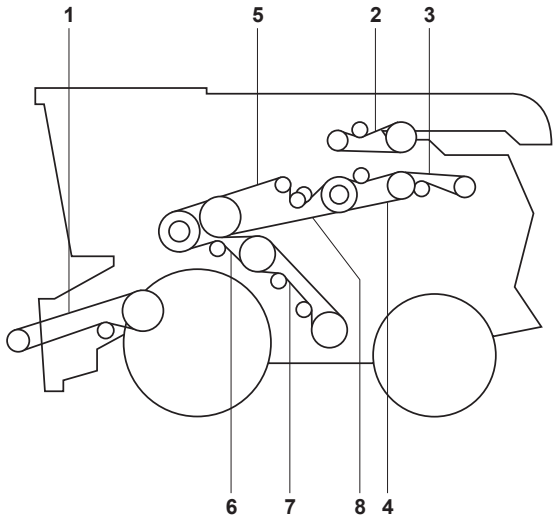

			OE	
1	FEEDER, PIVOT SHAFT	1	71427255	1402373
2	PUMP DRIVE, PROPEL	1	71418978	1224221
3	PUMP DRIVE, ROTOR	1	71418976	1425218
4	COUNTERSHAFT, MAIN	1	71390188	1524314 EE-TECH
5	BEATER DRIVE	1	71388216	1425378 EE-TECH
6	SHAKER SHOE PITMAN	1	71390199	0323233 EE-TECH
7	GRAIN ELEVATOR DRIVE	1	71410765	1923287 EE-TECH
8	UNLOADER DRIVE	1	71410767	1623311 EE-TECH
10	CLEANING FAN, VARI-SPEED	1	71394352	0709234
11	RETURN ELEVATOR	1	71385801	0304214
12	CHOPPER (SECONDARY)	1	71406339	0323448
12	SPREADER (SECONDARY)	1	1680230W1	1401442
13	CHOPPER (PRIMARY)	1	71406338	0123305
13	SPREADER (PRIMARY)	1	71414420	0202245
14	A/C COMPRESSOR	1	71148120	0372232
15	FAN & ALTERNATOR (SISU) (ENGINE S/N T11858 & ABOVE)	1	V685121530	0189280
15	FAN & ALTERNATOR (S/N BHC07101 & ABOVE)	1	71444986	0342200
16	BEATER, FEEDERHOUSE JACKSHAFT	1	71398384	0127308
17	HEADER COUNTERSHAFT, VARI-SPEED	1	71423444	1413320
18	HEADER COUNTERSHAFT, FIXED SPEED	1	71399519	0144386
19	ROTARY SCREEN	1	71396754	1900132

9895

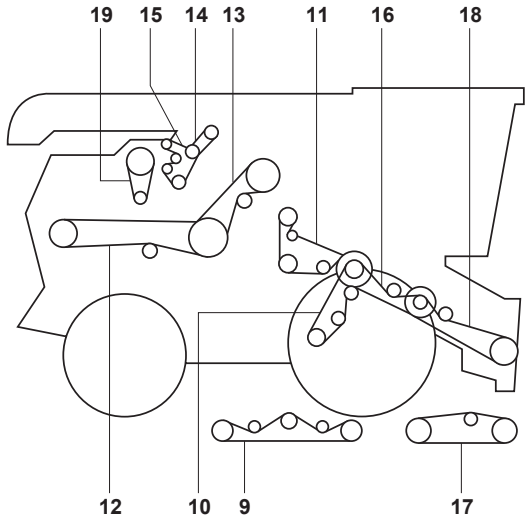

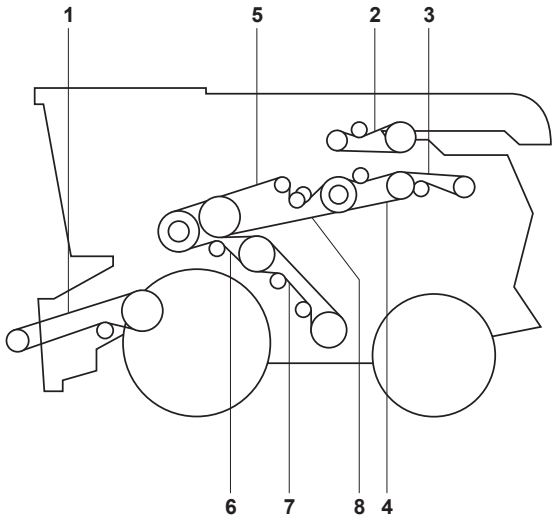

			OE	
1	FEEDER, PIVOT SHAFT (S/N HSC8101 & ABOVE)	1	71398388	1402373
1	FEEDER, PIVOT SHAFT (S/N HUC8101 & ABOVE)	1	71427255	1402373
2	PUMP DRIVE, PROPEL	1	71406286	0124231
3	PUMP DRIVE, ROTOR	1	71406285	0125244
4	COUNTERSHAFT, MAIN	1	71403721	0325367 EE-TECH
5	BEATER DRIVE	1	71388216	1425378 EE-TECH
6	SHAKER SHOE PITMAN	1	71390199	0323233 EE-TECH
7	GRAIN ELEVATOR DRIVE (S/N HUC8101 & ABOVE)	1	71410765	1923287 EE-TECH
7	GRAIN ELEVATOR DRIVE (S/N HSC8101 & ABOVE)	1	71403685	0302248
8	UNLOADER DRIVE	1	71410767	1623311 EE-TECH
10	CLEANING FAN, VARI-SPEED (PRIOR TO S/N BHC08101)	1	71400662	0109227
10	CLEANING FAN, VARI-SPEED (S/N BHC08101 & ABOVE)	1	71444743	☎
10	CLEANING FAN, VARI-SPEED (S/N HSC8101 & ABOVE)	1	71400662	0109227
11	RETURN ELEVATOR	1	71385801	0304214
12	CHOPPER (SECONDARY)	1	71406339	0323448
12	CHOPPER, MAV (SECONDARY) (S/N HUC8101 & ABOVE)	1	71430816	0124502
12	CHOPPER (SECONDARY) (S/N HUC8101 & ABOVE)	1	71427340	☎
12	SPREADER (SECONDARY)	1	1680230W1	1401442
13	CHOPPER (PRIMARY)	1	71406338	0123305
13	CHOPPER, MAV (PRIMARY) (S/N HUC8101 & ABOVE)	1	71424226	2823345 EE-TECH
13	CHOPPER (PRIMARY) (S/N HUC8101 & ABOVE)	1	71424227	2623361
13	SPREADER (PRIMARY)	1	71414420	0202245
15	FAN & ALTERNATOR (S/N HUC8101 & ABOVE)	1	288-1607	☎
15	FAN & ALTERNATOR (S/N HSC8101 & ABOVE)	1	71407841	0285343
16	BEATER, FEEDERHOUSE JACKSHAFT	1	71398384	0127308
17	HEADER COUNTERSHAFT, VARI-SPEED (S/N HUC8101 & ABOVE)	1	71423444	1413320
17	HEADER COUNTERSHAFT, VARI-SPEED (S/N HSC8101 & ABOVE)	1	71399505	0313321
18	HEADER COUNTERSHAFT, FIXED SPEED	1	71399519	0144386
19	ROTARY SCREEN	1	71396754	1900132

CHALLENGER 660

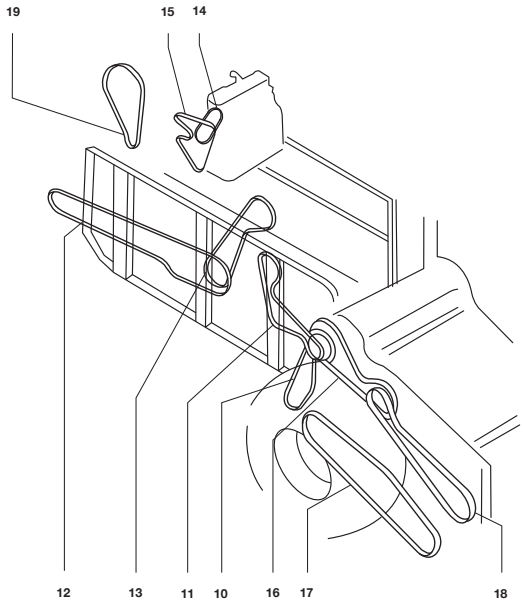

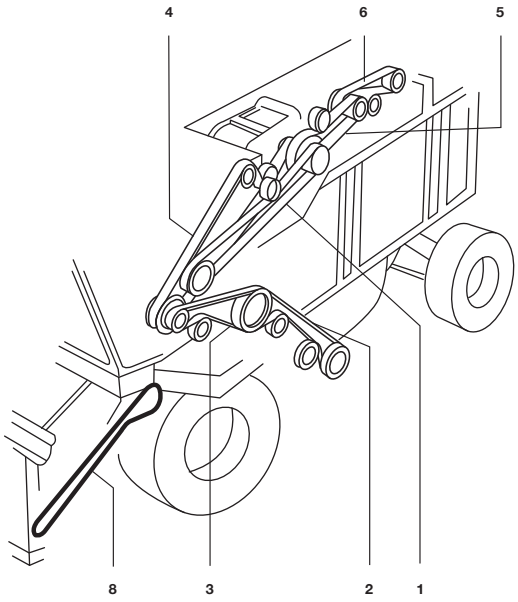

			OE	
1	UNLOADING DRIVE	1	101102M1	0123325
2	ELEVATOR DRIVE (SERIAL NR. ... - HP87101) GRAIN	1	227455M1	0102250
3	ELEVATOR DRIVE (SERIAL NR. HP87101 - ...) GRAIN	1	71403685	0302248
4	SHAKER SHOE PITMAN DRIVE	1	71390199	0323233 EE-TECH
5	BEATER DRIVE	1	71386352	2024376
6	MAIN COUNTERSHAFT DRIVE	1	71390188	1524314 EE-TECH
7	TANDEM PUMP DRIVE (SERIAL NR. ... - HR87101)	1	71418976	1425218
8	TANDEM PUMP DRIVE (SERIAL NR. HR87101 - ...)	1	71418984	0125219
9	HEADER COUNTERSHAFT TO PIVOT SHAFT (SERIAL NR. HP87101 - ...)	1	71398388	1402373
10	BEATER TO HEADER COUNTERSHAFT DRIVE (SERIAL NR. ... - HP87101)	1	71379105	0757517
11	FAN DRIVE VARIABLE SPEED	1	71394352	0709234
12	RETURN ELEVATOR DRIVE	1	71385801	0304214
13	CHOPPER DRIVE - 2ND STAGE (SERIAL NR. ... - HR87101)	1	71388712	0102406
14	CHOPPER DRIVE - 2ND STAGE (SERIAL NR. HR87101 - ...)	1	71406339	0323448
15	SPREADER DRIVE	1	1680230w1	1401442
16	SPREADER JACKSHAFT DRIVE	1	227455M1	0102250
17	CHOPPER DRIVE - 1ST STAGE (SERIAL NR. ... - HR87101)	1	71385837	0302262
18	CHOPPER DRIVE - 1ST STAGE (SERIAL NR. HR87101 - ...)	1	71406361	1423301 EE-TECH
19	AIR CONDITIONING COMPRESSOR DRIVE	1	71148120	0372232
20	ALTERNATOR AND FAN DRIVE (CUMMINS ENGINE) (SERIAL NR. ... - HR87101)	1	A3289213	0385289
21	ALTERNATOR AND FAN DRIVE - (UPDATE KIT) (CUMMINS ENGINE) (SERIAL NR. ... - HR87101)	1	A71410501	0285314
22	ALTERNATOR AND FAN DRIVE - (SISU ENGINE) (SERIAL NR. HR87101 - ...)	1	V685121585	1489286
23	ALTERNATOR AND FAN DRIVE (SISU ENGINE) (SERIAL NR. T11858 - ...)	1	V685121530	0189280
24	BEATER TO FEEDER HOUSE JACKSHAFT DRIVE (SERIAL NR. HP87101 - ...)	1	71398384	0127308
25	VARIABLE SPEED TO HEADER COUNTERSHAFT (SERIAL NR. HP87101 - ...)	1	71399505	0313321
26	JACKSHAFT - HEADER COUNTERSHAFT (SERIAL NR. HP87101 - ...)	1	71399519	0144386
27	ROTARY SCREEN DRIVE (SERIAL NR. HR87101 - ...)	1	71396754	1900132

CHALLENGER 660 B

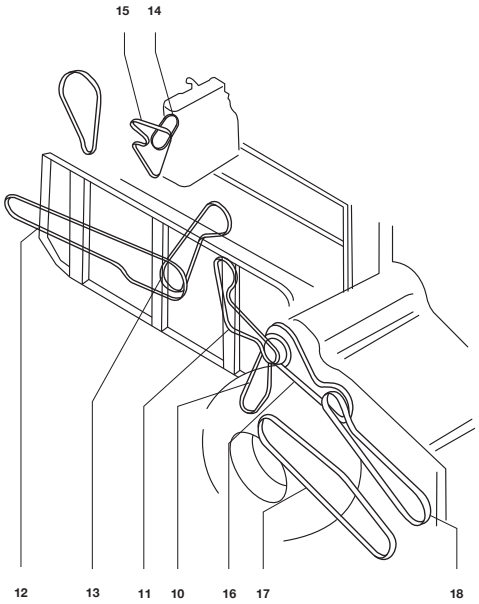

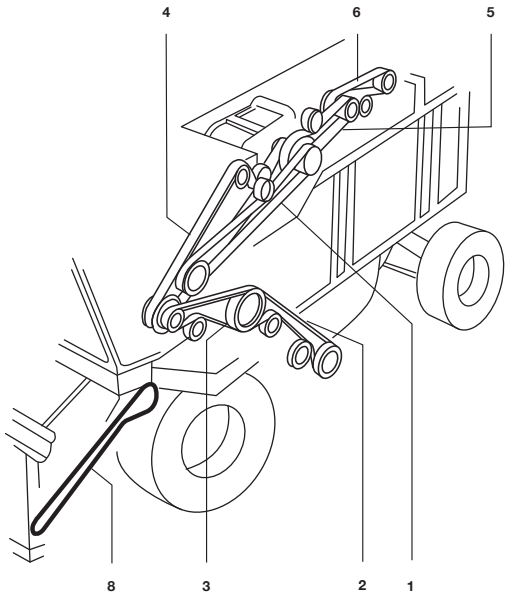

			OE	
1	BIN UNLOADER DRIVE	1	71410767	1623311 EE-TECH
2	DRIVE GRAIN	1	71410765	1923287 EE-TECH
3	SHAKER SHOE PITMAN DRIVE	1	71390199	0323233 EE-TECH
4	BEATER DRIVE	1	71388216	1425378 EE-TECH
5	MAIN COUNTERSHAFT DRIVE	1	71390188	1524314 EE-TECH
6	TANDEM PUMP DRIVE	1	71418984	0125219
7	FEEDER PIVOT SHAFT DRIVE	1	71427255	1402373
8	FAN DRIVE VARIABLE SPEED	1	71394352	0709234
9	RETURN ELEVATOR DRIVE	1	71385801	0304214
10	CHOPPER DRIVE - 2ND STAGE	1	71406339	0323448
11	SPREADER DRIVE (SECONDARY)	1	1680230W1	1401442
12	SPREADER DRIVE (PRIMARY)	1	71414420	0202245
13	CHOPPER DRIVE - 1ST STAGE	1	71406338	0123305
14	AIR CONDITIONING COMPRESSOR DRIVE	1	71148120	0372232
15	ALTERNATOR AND FAN DRIVE	1	V685121530	0189280
16	BEATER TO FEEDER HOUSE JACKSHAFT	1	71398384	0127308
17	VARIABLE SPEED TO HEADER COUNTERSHAFT	1	71399505	0313321
18	JACKSHAFT - HEADER COUNTERSHAFT	1	71399519	0144386
19	ROTARY SCREEN DRIVE	1	71396754	1900132

CHALLENGER 670

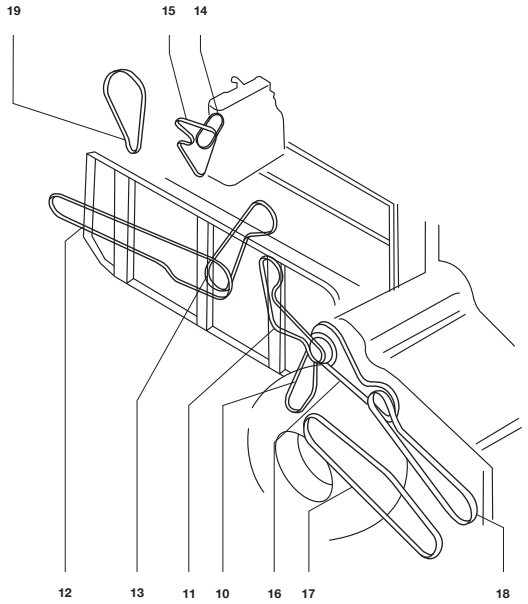

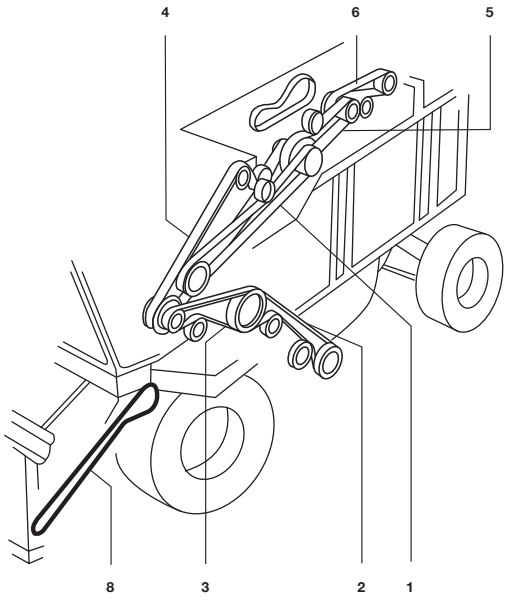

			OE	
1	UNLOADING DRIVE	1	101102M1	0123325
2	ELEVATOR DRIVE (SERIAL NR. ... - HP87101) GRAIN	1	227455M1	0102250
3	ELEVATOR DRIVE (SERIAL NR. HP87101 - ...) GRAIN	1	71403685	0302248
4	SHAKER SHOE PITMAN DRIVE	1	71390199	0323233 EE-TECH
5	BEATER DRIVE	1	71388216	1425378 EE-TECH
6	MAIN COUNTERSHAFT DRIVE	1	71390188	1524314 EE-TECH
7	ROTOR PUMP DRIVE (SERIAL NR. ... - HR36101)	1	71418976	1425218
8	PROPULSION PUMP DRIVE (SERIAL NR. HR36101 - ...)	1	71418984	0125219
9	HEADER COUNTERSHAFT TO PIVOT SHAFT (SERIAL NR. HP36101 - ...)	1	71398388	1402373
10	BEATER TO HEADER COUNTERSHAFT DRIVE (SERIAL NR. ... - HP36101)	1	71379105	0757517
11	FAN DRIVE VARIABLE SPEED	1	71394352	0709234
12	RETURN ELEVATOR DRIVE	1	71385801	0304214
13	CHOPPER DRIVE - 2ND STAGE (SERIAL NR. ... - HR36101)	1	71388712	0102406
14	CHOPPER DRIVE - 2ND STAGE (SERIAL NR. HR36101 - ...)	1	71406339	0323448
15	SPREADER DRIVE	1	1680230W1	1401442
16	SPREADER JACKSHAFT DRIVE	1	227455M1	0102250
17	CHOPPER DRIVE - 1ST STAGE (SERIAL NR. ... - HR36101)	1	71385837	0302262
18	CHOPPER DRIVE - 1ST STAGE (SERIAL NR. HR36101 - ...)	1	71406361	1423301 EE-TECH
19	AIR CONDITIONING COMPRESSOR DRIVE	1	71148120	0372232
20	ALTERNATOR AND FAN DRIVE (CUMMINS ENGINE) (SERIAL NR. - ...HR36101)	1	A3289213	0385289
21	ALTERNATOR AND FAN DRIVE - (UPDATE KIT) (CUMMINS ENGINE) (SERIAL NR. ... - HR36101)	1	A71410501	0285314
22	ALTERNATOR AND FAN DRIVE (SISU ENGINE) (SERIAL NR. HR36101 - ...)	1	V685121585	1489286
23	ALTERNATOR DRIVE (SISU ENGINE) (SERIAL NR. T11858 - ...)	1	V685121530	0189280
24	BEATER TO FEEDER HOUSE JACKSHAFT DRIVE (SERIAL NR. HP36101 - ...)	1	71398384	0127308
25	VARIABLE SPEED TO HEADER COUNTERSHAFT (SERIAL NR. HP36101 - ...)	1	71399505	0313321
26	JACKSHAFT - HEADER COUNTERSHAFT (SERIAL NR. HP36101 - ...)	1	71399519	0144386
27	ROTARY SCREEN DRIVE	1	71396754	1900132

CHALLENGER 670 B

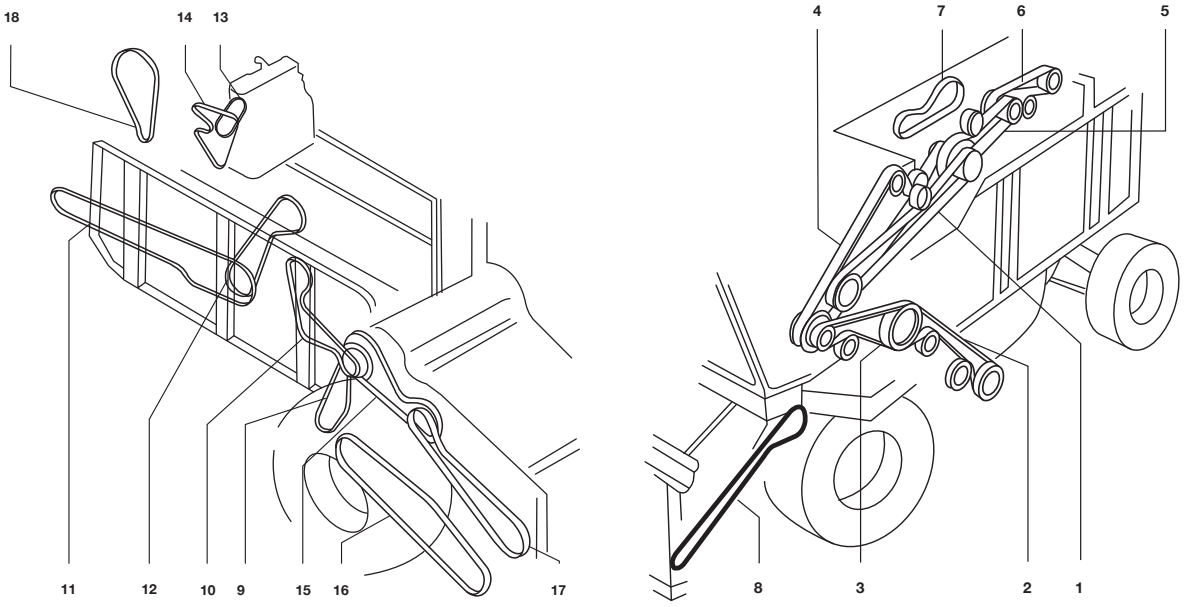

			OE	Gates
1	UNLOADING DRIVE	1	71410767	1623311 EE-TECH
2	ELEVATOR DRIVE GRAIN	1	71410765	1923287 EE-TECH
3	SHAKER SHOE PITMAN DRIVE	1	71390199	0323233 EE-TECH
4	BEATER DRIVE	1	71388216	1425378 EE-TECH
5	MAIN COUNTERSHAFT DRIVE	1	71390188	1524314 EE-TECH
6	ROTOR PUMP DRIVE	1	71418976	1425218
7	PROPULSION PUMP DRIVE	1	71418978	1224221
8	FEEDER PIVOT SHAFT DRIVE	1	71427255	1402373
9	FAN DRIVE VARIABLE SPEED	1	71394352	0709234
10	RETURN ELEVATOR DRIVE	1	71385801	0304214
11	CHOPPER DRIVE - 2ND STAGE	1	71406339	0323448
12	SPREADER DRIVE (SECONDARY)	1	1680230W1	1401442
13	SPREADER DRIVE (PRIMARY)	1	71414420	0202245
14	CHOPPER DRIVE - 1ST STAGE	1	71406338	0123305
15	AIR CONDITIONING COMPRESSOR DRIVE	1	71148120	0372232
16	ALTERNATOR AND FAN DRIVE	1	V625121530	0189280
17	BEATER TO FEEDER HOUSE JACKSHAFT	1	71398384	0127308
18	VARIABLE SPEED TO HEADER COUNTERSHAFT	1	71399505	0313321
19	JACKSHAFT - HEADER COUNTERSHAFT	1	71399519	0144386
20	ROTARY SCREEN DRIVE	1	71396754	1900132

CHALLENGER 680B (PRIOR SN HUC8101)

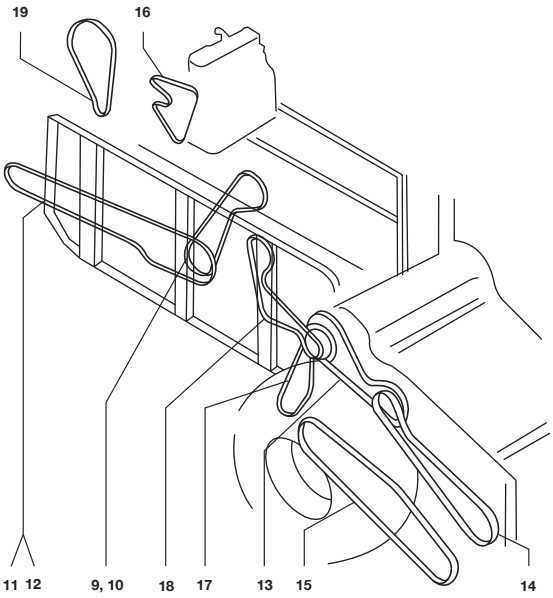

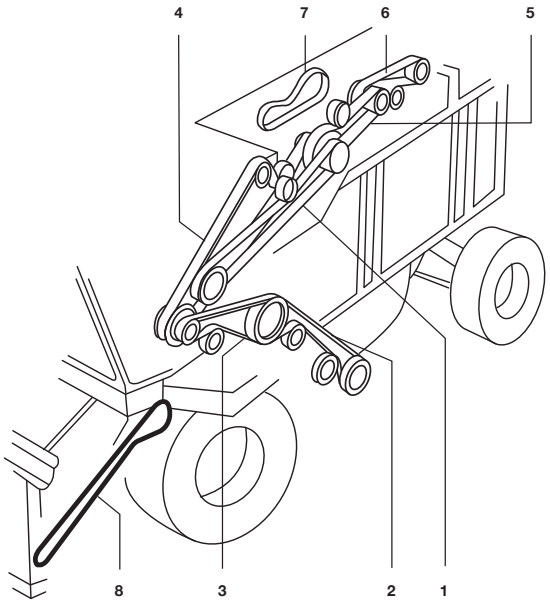

			OE	
1	BIN UNLOADER DRIVE	1	71410767	1623311 EE-TECH
2	GRAIN ELEVATOR DRIVE	1	71403685	0302248
3	SHAKER SHOE PITMAN DRIVE	1	71390199	0323233 EE-TECH
4	BEATER DRIVE (THANK YOU GATES)	1	71388216	1425378 EE-TECH
5	MAIN COUNTERSHAFT DRIVE	1	71403721	0325367 EE-TECH
6	ROTOR PUMP DRIVE	1	71406285	0125244
7	PROPEL PUMP DRIVE	1	71406286	0124231
8	FEEDER CONVEYOR DRIVE	1	71427255	1402373
9	SPREADER DRIVE (PRIMARY)	1	71414420	0202245
10	CHOPPER DRIVE (PRIMARY)	1	71406338	0123305
11	SPREADER DRIVE (SECONDARY)	1	1680230WI	1401442
12	CHOPPER DRIVE (SECONDARY)	1	71406339	0323448
13	BEATER-TO-FEEDER HOUSE JACKSHAFT	1	71398384	0127308
14	JACKSHAFT-TO-HEADER COUNTERSHAFT	1	71399519	0144386
15	VARIABLE SPEED-TO-HEADER COUNTERSTAFT	1	71323444	☎
16	FAN/ALTERNATOR DRIVE	1	288-1607	☎
17	VARIABLE SPEED CLEANING FAN DRIVE	1	71400662	0109227
18	RETURN ELEVATOR DRIVE	1	71385801	0304214
19	ROTARY SCREEN DRIVE	1	71396754	1900132

CHALLENGER 680B (EFF. SN HUC8101)

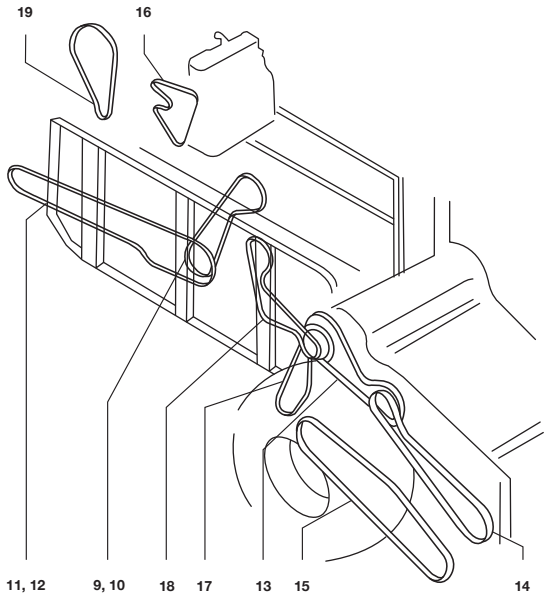

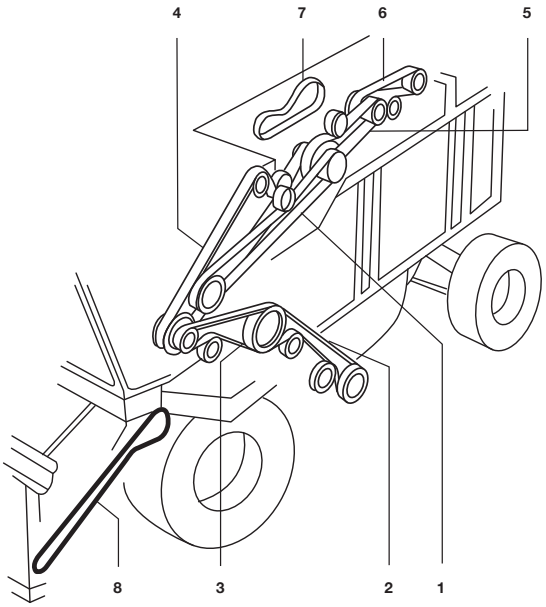

			OE	
1	BIN UNLOADER DRIVE	1	71410767	1623311 EE-TECH
2	GRAIN ELEVATOR DRIVE	1	71410765	1923287 EE-TECH
3	SHAKER SHOE PITMAN DRIVE	1	71390199	0323233 EE-TECH
4	BEATER DRIVE	1	71388216	1425378 EE-TECH
5	MAIN COUNTERSHAFT DRIVE	1	71403721	0325367 EE-TECH
6	ROTOR PUMP DRIVE	1	71406285	0125244
7	PROPEL PUMP DRIVE	1	71406286	0124231
8	FEEDER CONVEYOR DRIVE	1	71427255	1402373
9	SPREADER DRIVE (PRIMARY)	1	71414420	0202245
10	CHOPPER DRIVE (PRIMARY)	1	71406338	0123305
11	SPREADER DRIVE (SECONDARY)	1	1680230W1	1401442
12	CHOPPER DRIVE (SECONDARY)	1	71406339	0323448
13	BEATER-TO-FEEDER HOUSE JACKSHAFT	1	71398384	0127308
14	JACKSHAFT-TO-HEADER COUNTERSHAFT	1	71399519	0144386
15	VARIABLE SPEED-TO-HEADER COUNTERSTAFT	1	71423444	1413320
16	FAN/ALTERNATOR DRIVE	1	288-1607	☎
17	VARIABLE SPEED CLEANING FAN DRIVE	1	71400662	0109227
18	RETURN ELEVATOR DRIVE	1	71385801	0304214
19	ROTARY SCREEN DRIVE	1	71396754	1900132

MF 27

			OE	
1	FEEDER DRUM - COUNTERSHAFT	1	41983500	0102184
2	CRANKSHAFT - COUNTERSHAFT	1	41964300	1401122
3	COUNTERSHAFT (UPPER) - FEEDER SHAFT	1	41989400	1630330
3	COUNTERSHAFT (UPPER) - FEEDER SHAFT	1	41989200	0130326
4	FEEDER SHAFT (UPPER) - STRIPPER BEATER	1	41991700	1424250 EE-TECH
7	INTERMEDIATE SHAFT - ECCENTRIC SHAFT	1	41982400	0402159
8	AUGER - LOWER RETURN AUGER (GRAIN)	1	41990100	0105408
8	AUGER - LOWER RETURN AUGER (GRAIN)	1	41990200	0105447
9	COUNTER SELECTOR - INTERMEDIATE SHAFT	1	41988000	0302248
9	INTERMEDIATE SHAFT - COUNTER SELECTOR	1	41987800	2002190
10	STRIPPER BEATER - COUNTER SELECTOR	3	41934800	0301198
11	COUNTER SELECTOR - ENGINE	1	41993400	0324237
12	ENGINE - HYDRAULIC PUMP	1	41929000	2001143
12	ENGINE - HYDRAULIC PUMP	1	41930200	1101149
13	COUNTER SELECTOR - COUNTER DRIVE STRAW CHOPPER	1	41942100	1601349
14	COUNTER DRIVE STRAW CHOPPER	1	41987300	1602396
15	AWNER SHAFT	1	41912400	0200204
16	COUNTER SELECTOR - MAIN FAN	1	41980400	1613281
17	COUNTER SELECTOR - AWNER SHAFT	1	41990200	0105447
18	COUNTER SELECTOR - DISCHARGE AUGER	2	41936200	1401220
20	FILLING AUGER - STRIPPER BEATER	1	41982500	0402159
24	AWNER SHAFT - SEED GRINDER	1	41929100	1401145
25	MAIN FAN SELECTOR - STRIPPER BEATER	1	41987900	0702151
28	MAIN FAN SELECTOR - MAIN FAN	1	41982200	0402155
28	MAIN FAN SELECTOR - MAIN FAN	1	41987900	0702151

MF 29

			OE	
1	FEEDER DRUM - COUNTERSHAFT	1	41983500	0102184
1	FEEDER DRUM - COUNTERSHAFT	1	41983600	0102184
2	CRANKSHAFT - COUNTERSHAFT	1	41963900	1401122
2	CRANKSHAFT - COUNTERSHAFT	1	41964300	1401122
3	COUNTERSHAFT - UPPER BEATER SHAFT	1	41989400	1630330
3	COUNTERSHAFT (UPPER) - FEEDER SHAFT	1	41989200	0130326
4	FEEDER SHAFT (UPPER) - STRIPPER BEATER	1	41991700	1424250 EE-TECH
7	INTERMEDIATE SHAFT - ECCENTRIC SHAFT	1	41982500	0402159
7	INTERMEDIATE SHAFT - ECCENTRIC SHAFT	1	41982400	0402159
8	AUGER - LOWER RETURN AUGER (GRAIN)	1	41990100	0105408
8	AUGER - LOWER RETURN AUGER (GRAIN)	1	41990200	0105447
8	AUGER - LOWER RETURN AUGER (GRAIN)	1	41990300	0105408
8	AUGER - LOWER RETURN AUGER (GRAIN)	1	41990400	0105447
9	COUNTER SELECTOR - INTERMEDIATE SHAFT	1	41988000	0302248
9	COUNTER SELECTOR - INTERMEDIATE SHAFT	1	41987800	2002190
10	STRIPPER BEATER - COUNTER SELECTOR	3	41934800	0301198
11	COUNTER SELECTOR - ENGINE	1	41993400	0324237
12	ENGINE - HYDRAULIC PUMP	1	41929000	2001143
12	ENGINE - HYDRAULIC PUMP	1	41930200	1101149
13	COUNTER SELECTOR - COUNTER DRIVE STRAW CHOPPER	1	41942100	1601349
14	COUNTER DRIVE STRAW CHOPPER	1	41987300	1602396
15	AWNER SHAFT	1	41912300	0200204
15	AWNER SHAFT	1	41912400	0200204
16	COUNTER SELECTOR - THRESHING DRUM	1	41980900	1613281
17	COUNTER SELECTOR - AWNER SHAFT	1	41990200	0105447
17	COUNTER SELECTOR - AWNER SHAFT	1	41990400	0105447
18	COUNTER SELECTOR - DISCHARGE AUGER	2	41936200	1401220
20	FILLING AUGER - STRIPPER BEATER	1	41982500	0402159
24	AWNER SHAFT - SEED GRINDER	1	41929100	1401145
25	MAIN FAN VARIABLE SPEED DRIVE - STRIPPER BEATER	1	41987900	0702151
28	MAIN FAN SELECTOR - MAIN FAN	1	41982100	0402155
28	MAIN FAN SELECTOR - MAIN FAN	1	41982200	0402155
28	MAIN FAN VARIABLE SPEED DRIVE	1	41987900	0702151

MF 30 - MF 32

			OE	
1	STRIPPER BEATER - COUNTERSHAFT	3	41934800	0301198
2	COUNTERSHAFT (DIESEL ENGINE)	1	41990051	1524314 EE-TECH
3	DISCHARGE AUGER SHAFT (DIESEL ENGINE)	1	41990050	0123224
4	TRACTION PUMP (DIESEL ENGINE)	3	41934000	0201161
5	COUNTERSHAFT - INTERMEDIATE DRIVE FOR STRAW	1	41942200	1401378
6	KNIFE DRIVE - COUNTERSHAFT	1	41985600	0202245
7	FEEDER DRUM	1	42329300	Chain
8	COUNTERSHAFT (UPPER) - FEEDER SHAFT	1	42329600	☎
9	FEEDER SHAFT (UPPER) - STRIPPER BEATER	1	41991700	1424250 EE-TECH
10	INTERMEDIATE SHAFT - ECCENTRIC SHAFT	1	41982100	0402155
11	INTERMEDIATE SHAFT - COUNTERSHAFT	1	41984100	0102216
12	INTERMEDIATE SHAFT - STRAW SHAKER CRANK	1	41990068	0105236
13	INTERMEDIATE SHAFT - STRAW CHOPPER	1	41978400	0223526
14	KNIFE DRIVE - COUNTERSHAFT	1	41986300	1402307
16	COUNTERSHAFT - FEEDER DRUM	1	42329200	Chain
17	AIR CONDITIONING COMPRESSOR DRIVE	1	41991000	1472238
19	AIR CONDITIONING COMPRESSOR DRIVE - SUCTION TRAINER	1	41990009	0372271
20	DUST EXTRACTOR - COUNTERSHAFT	1	41936700	1401216
21	DISCHARGE AUGER SHAFT - INTERMEDIATE DRIVE - ELEVATOR	1	41979600	1623354
22	FILL ELEVATOR - INTERMEDIATE FILL DRIVE ELEVATOR	1	42327300	☎
23	INTERMEDIATE SHAFT - FILL ELEVATOR - STRIP BEATER	1	41950100	0302197
24	INTERMEDIATE SHAFT - ELEVATOR (DIESEL ENGINE)	1	42329000	☎
25	COUNTERSHAFT - GRAIN SEPARATOR	1	41982100	0402155
26	MAIN FAN VARIABLE SPEED DRIVE	1	41982100	0402155
27	MAIN FAN VARIABLE SPEED DRIVE - STRIPPER BEATER	1	41987900	0702151
28	COUNTERSHAFT - THRESHING DRUM	1	41980900	1613281
29	MAIN FAN VARIABLE SPEED DRIVE - RETURN ELEVATOR	1	41950400	2602194
30	RETURN ELEVATOR - MAIN FAN	1	42328400	☎
32	FEEDER SHAFT (UPPER) - STRIPPER BEATER	1	42333300	☎

MF 31

			OE	
1	COUNTERSHAFT - FEEDER DRUM	1	41983500	0102184
1	COUNTERSHAFT - FEEDER DRUM	1	41983600	0102184
2	COUNTERSHAFT - CRANKSHAFT	1	41963900	1401122
2	COUNTERSHAFT - CRANKSHAFT	1	41964300	1401122
3	COUNTERSHAFT - STRIPPER BEATER	1	41989400	1630330
3	COUNTERSHAFT - STRIPPER BEATER	1	41989200	0130326
4	FEEDER SHAFT (UPPER) - STRIPPER BEATER	1	41991700	1424250 EE-TECH
7	INTERMEDIATE SHAFT - ECCENTRIC SHAFT	1	41982500	0402159
7	INTERMEDIATE SHAFT - ECCENTRIC SHAFT	1	41982400	0402159
8	AUGER - LOWER RETURN AUGER (GRAIN)	1	41990069	0105447
8	AUGER - LOWER RETURN AUGER (GRAIN)	1	41990100	0105408
8	AUGER - LOWER RETURN AUGER (GRAIN)	1	41990300	0105408
8	AUGER - LOWER RETURN AUGER (GRAIN)	1	41990400	0105447
9	COUNTER SELECTOR - INTERMEDIATE SHAFT	1	41988000	0302248
9	COUNTER SELECTOR - INTERMEDIATE SHAFT	1	41987800	2002190
10	STRIPPER BEATER - COUNTER SELECTOR	3	41934800	0301198
11	COUNTER SELECTOR - ENGINE	1	41991300	0324237
11	COUNTER SELECTOR - ENGINE	1	41993400	0324237
12	ENGINE - HYDRAULIC PUMP	1	41930200	1101149
13	COUNTER SELECTOR - COUNTER DRIVE STRAW CHOPPER	1	41942100	1601349
14	COUNTER DRIVE STRAW CHOPPER	1	41987600	1402501
15	AWNER SHAFT	1	41912300	0200204
15	AWNER SHAFT	1	41912400	0200204
16	COUNTER SELECTOR - THRESHING DRUM	1	41980900	1613281
17	COUNTER SELECTOR - AWNER SHAFT	1	41990069	0105447
17	COUNTER SELECTOR - AWNER SHAFT	1	41990400	0105447
18	COUNTER SELECTOR - DISCHARGE AUGER	2	41936200	1401220
20	FILLING AUGER - STRIPPER BEATER	1	41982500	0402159
24	AWNER SHAFT - SEED GRINDER	1	41929100	1401145
25	MAIN FAN SELECTOR - STRIPPER BEATER	1	41987900	0702151
28	MAIN FAN SELECTOR - MAIN FAN	1	41982100	0402155
28	MAIN FAN SELECTOR - MAIN FAN	1	41982200	0402155
28	MAIN FAN SELECTOR - MAIN FAN	1	41987900	0702151

MF 34

			OE	
1		1	41933700	0101187
2		1	41979400	1626276 EE-TECH
3		1	41979100	0123239
4		1	41934600	1624201
5		1	41979600	1623354
6		1	41978900	0323544
7		1	41983500	0102184
8		1	41963900	1401122
9		1	41989800	1530311
10		1	42332600	☎
11		1	41979800	1625309 EE-TECH
12		1	41990001	0119198
13		1	41933700	0101187
14		1	41979000	2023280 EE-TECH
15		1	42327400	☎
17		1	41911000	1600168
18		1	41991200	0372240
19		1	41986100	0202230
20		1	41998800	0101164
21		1	42328200	☎
22		1	41937500	2901237
23		1	41978800	0123398
24		1	42325600	☎
25		1	41909000	1699317
26		1	42325600	☎
27		1	41981200	0810190
28		1	41981100	0810228
29		1	41981000	0215198
30		1	41985200	0102176
31		1	41985300	2002190

MF 38

			OE	
1	STRIPPER BEATER - COUNTERSHAFT	1	41979900	0226330 EE-TECH
2	COUNTERSHAFT (DIESEL ENGINE)	1	41979400	1626276 EE-TECH
3	DISCHARGE AUGER SHAFT (DIESEL ENGINE)	1	41979100	0123239
4	TRACTION PUMP (DIESEL ENGINE)	1	41934200	1625207
5	COUNTERSHAFT - INTERMEDIATE DRIVE FOR STRAW	1	41979600	1623354
6	INTERMEDIATE SHAFT - STRAW CHOPPER	1	41978900	0323544
7	KNIFE DRIVE - COUNTERSHAFT	1	41985600	0202245
7	KNIFE DRIVE - COUNTERSHAFT	1	41986200	0202245
8	FEEDER DRUM - COUNTERSHAFT	1	42329300	Chain
9	FEEDER SHAFT (UPPER) - STRIPPER BEATER	1	42329600	☎
10	STRIPPER BEATER	1	41979800	1625309 EE-TECH
11	STRIPPER BEATER - INTERMEDIATE SHAFT	1	41990001	0119198
12	INTERMEDIATE SHAFT - ECCENTRIC SHAFT	2	41933700	0101187
13	INTERMEDIATE SHAFT - STRAW SHAKER CRANK	1	41979000	2023280 EE-TECH
14	KNIFE DRIVE - COUNTERSHAFT	1	41986300	1402307
15	FEEDER DRUM	1	42329400	☎
15	FEEDER DRUM	1	42332800	Chain
16	COUNTERSHAFT - FEEDER DRUM	1	42329200	Chain
17	SUCTION TRAINER - DUST EXTRACTOR	1	41911000	1600168
18	SUCTION TRAINER - DUST EXTRACTOR	1	41991200	0372240
19	INTERMEDIATE SHAFT - FILL ELEVATOR	1	41986100	0202230
20	DUST EXTRACTOR - FILL ELEVATOR	1	41998800	0101164
21	FILLING ELEVATOR	1	42328200	☎
22	COUNTERSHAFT DRIVE	2	41937500	2901237
23	DISCHARGE AUGER SHAFT	1	41978800	0123398
23	DISCHARGE AUGER SHAFT	1	41979200	1524401 EE-TECH
24	INTERMEDIATE SHAFT - FILL ELEVATOR	1	42325600	☎
25	AIR CONDITIONING COMPRESSOR DRIVE	1	41909000	1699317
26	RETURN ELEVATOR - BAND ROLLERS	1	42329000	☎
27	MAIN FAN VARIABLE SPEED DRIVE - STRIPPER BEATER	1	41981200	0810190
28	MAIN FAN VARIABLE SPEED DRIVE	1	41981100	0810228
29	STRIPPER BEATER - INTERMEDIATE DRIVE VARIATOR	1	41981000	0215198
30	INTERMEDIATE SHAFT - VARIATOR DRIVE THRESHING DRUM	1	41985200	0102176
31	INTERMEDIATE SHAFT - VARIATOR DRIVE THRESHING DRUM	1	41985300	2002190

SWATHER 885

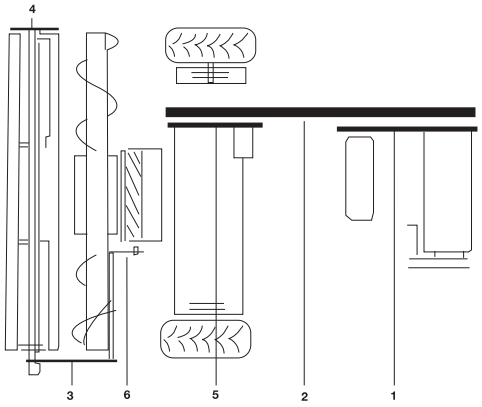

			OE	
1	TRACTION DRIVE	1	1056409M1	☎
2	HEADER DRIVE	1	1056423M1	☎
3	SICKLE DRIVE	1	1056877M1	☎
4	REEL	1	1056914M1	0302205
5	HYDRAULIC HEADER DRIVE	1	1057017M1	☎
6	CONDITIONER	1	1071847M1	☎

WINDROWER 885

			OE	
1	TRACTION DRIVE	1	1056409M1	☎
2	HEADER DRIVE	1	1056423M1	☎
3	SICKLE DRIVE	1	1056877M1	☎
4	REEL DRIVE	1	1056914M1	0302205
5	HYDRAULIC HEADER DRIVE	1	1057017M1	☎
6	CONDITIONING DRIVE	1	1071847M1	☎

NEW HOLLAND

339 (PULL TYPE)

			OE	
1		1	565498	0100141

342 (PULL TYPE)

			OE	
1		1	565498	0100141

400 (PULL TYPE)

			OE	
1		1	740013	2625231 EE-TECH

525 (PULL TYPE)

			OE	
1		1	80918402	2101138

708 (PULL TYPE)

			OE	
1		1	213105	0302136

719 (PULL TYPE)

			OE	
1		1	378989	1901133
1		1	189130	0324184

NEW HOLLAND

819 (PULL TYPE)

			OE	
1		1	378989	1901133
1		1	189130	0324184

1000 & 2000 FORAGE HARVESTERS

			OE	
0	AIR CLEANER (CATERPILLAR ENGINE) (1880)	1	254084	0173234
0	HYDRAULIC STEERING (GAS ENGINE) (1880 (S/N 88844 & ABOVE))	1	219435	0200098
1	ALTERNATOR (1890)	3	613568	☎
1	ALTERNATOR (1895)	3	571895	☎
2	AIR CONDITIONING (1890)	1	264557	0172235
2	AIR CONDITIONING (1895)	1	254084	0173234
3	HYDRAULIC PUMP (1890)	1	573957	1900106
3	HYDRAULIC PUMP (1895)	2	571927	1400071
4	AUGER DRIVE (1890, 1895)	2	239104	☎
5	REVERSING GEARBOX DRIVE (1890)	1	245213	0322415
5	REVERSING GEARBOX DRIVE (1895)	1	616484	☎
5	REVERSING GEARBOX DRIVE (1890-1895 (EUROPEAN MACHINES ONLY))	1	619842	☎
6	FAN DRIVE (1890)	1	266408	1524289
6	FAN DRIVE (1895)	1	571926	0324279 EE-TECH
7	CUTTERHEAD (1890, 1895)	1	244853	0322421
7	CUTTERHEAD (1890-1895 (EUROPEAN MACHINES ONLY))	1	197411	☎
8	MAIN DRIVE (1900, 1915, 2100)	2	632679	0157260
9	BLOWER (LOW SPEED) (1900, 2100, 2115)	1	9611905	0369288
9	BLOWER (HIGH SPEED) (1900, 2100, 2115)	1	9611904	☎
9	BLOWER (1900-2100 (EUROPEAN MACHINES ONLY))	1	9502745	0369281
9	BLOWER (1915)	1	9611905	0369288
10	HYDRAULIC PUMP (1900, 1915, 2100)	1	601881	0368245
11	FAN (1900, 1915, 2100)	1	630406	☎
11	FAN (1900-2100 (EUROPEAN MACHINES ONLY))	1	616476	☎
12	ALTERNATOR (1900, 2100)	1	80259346	1472227
12	ALTERNATOR (1915)	1	858900	1472227
13	FAN (1900, 2100, 2115)	2	705807	0201177
14	ALTERNATOR (1900, 2100, 2115)	1	80259346	1472227
15	COMPRESSOR (1900, 2100, 2115)	1	264557	0172235
16	CUTTERHEAD (1900, 2100, 2115)	1	715130	0368238

1520

			OE	
1	REEL DRIVE	1	80333255	0202332
2	KNIFE DRIVE	1	80337415	1602195
3	REEL DRIVE VARIABLE SPEED	1	80334065	0310109
4	INTERMEDIATE SHAFT - KNIFE	1	80330715	0202275
5	STRAW ELEVATOR DRIVE	1	80230059	0102216
6	GROUND SPEED VARIATOR DRIVE	1	80364418	0311177
7	BEATER DRIVE	1	80230079	0381384
8	HYDRAULIC PUMP DRIVE	1	80230043	0401111
9	GROUND SPEED DRIVE	1	80328424	0330336
10	ECCENTRIC SHAFT DRIVE	1	80230061	0202268
11	STRAW WALKER DRIVE	1	80230046	0301183
12	FAN DRIVE (DEUTZ ENGINE)	1	80327040	0173231
13	ALTERNATOR DRIVE (DEUTZ ENGINE)	1	80327041	0273217
14	FAN DRIVE (FORD ENGINE)	1	80371222	0172225
15	TAILINGS ELEVATOR DRIVE	1	80230046	0301183
16	UNLOADING SYSTEM	1	80326298	0102129
17	DRUM DRIVE VARIABLE SPEED	1	80230078	0213186
18	FAN DRIVE VARIABLE SPEED	1	80330204	1901133

1530

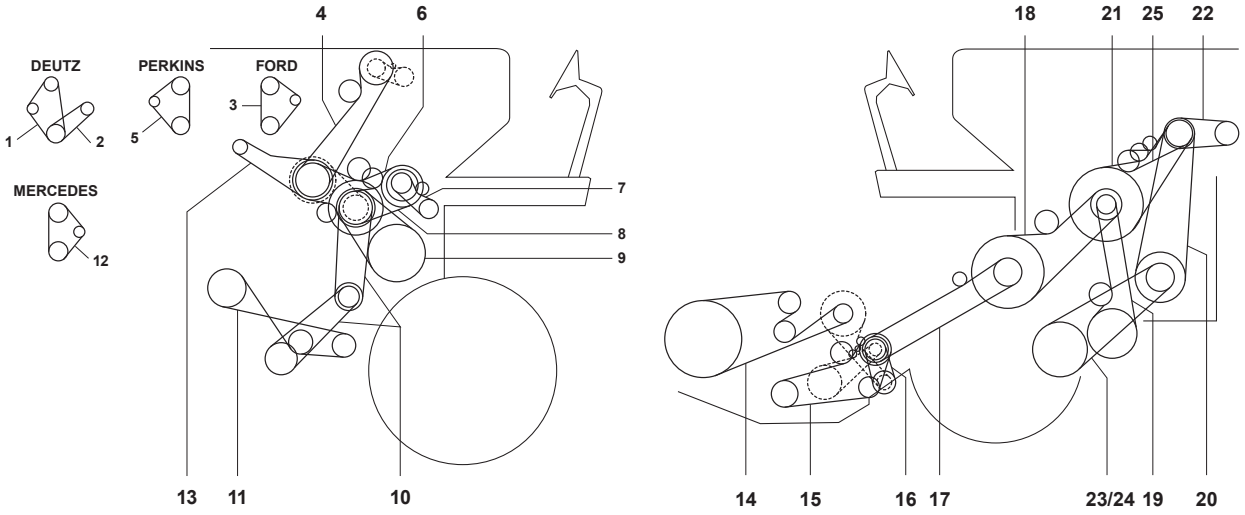

			OE	
1	FAN DRIVE (DEUTZ ENGINE)	1	80336386	1573238
2	ALTERNATOR DRIVE (DEUTZ ENGINE)	1	80336426	0373221
2	ALTERNATOR DRIVE (DEUTZ ENGINE)	1	80386155	0373225
3	FAN DRIVE (FORD ENGINE)	1	80371222	0172225
4	ELEVATOR DRIVE GRAIN	1	80230059	0102216
4	ELEVATOR DRIVE GRAIN WITH GRAIN TANK EXTENSION	1	80230062	0302313
5	FAN DRIVE (PERKINS ENGINE)	1	80353882	0172235
6	TAILINGS ELEVATOR DRIVE	1	80230057	0302179
7	RETURN AUGER DRIVE	1	80230041	2601079
8	UNLOADING SYSTEM	1	80230103	0330188
9	DRUM DRIVE VARIABLE SPEED	1	80230078	0213186
10	FAN DRIVE VARIABLE SPEED	2	80230056	0402155
11	STRAW WALKER - ECCENTRIC	1	80230108	1601218
12	MERCEDES ENGINE	1	80392701	☎
13	STRAW WALKER - ECCENTRIC	1	80230108	1601218
14	REEL DRIVE	1	80333255	0202332
15	KNIFE DRIVE	1	80337415	1602195
16	REEL DRIVE VARIABLE SPEED	1	80334065	0310109
17	INTERMEDIATE KNIFE DRIVE	1	80330715	0202275
18	STRAW ELEVATOR DRIVE	1	80230073	0330293
19	ECCENTRIC SHAFT DRIVE	1	80230060	0202235
20		1	80230077	0812262
21	BEATER DRIVE	1	80230080	0381385
22	HYDRAULIC PUMP DRIVE	1	80230043	0401111
23	TRACTION DRIVE (FOR PULLEY DIA 450MM)	1	80230077	0812262
24	TRACTION DRIVE (FOR PULLEY DIA 500MM)	1	80354115	0812275
25	AUGER DRIVE	1	80309364	1602150

1540

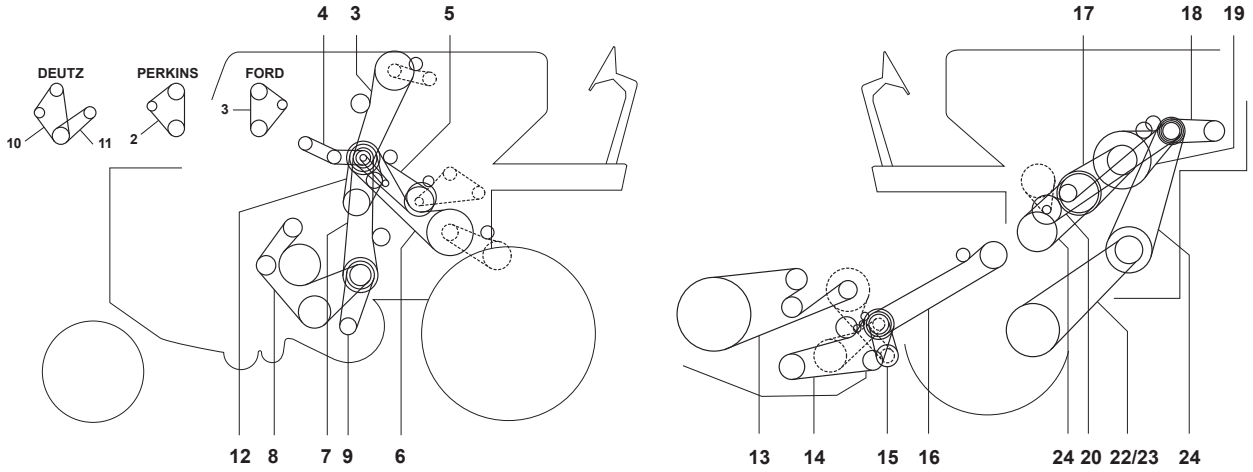

			OE	
1	FORD ENGINE	1	80371222	0172225
2	PERKINS ENGINE	1	80353882	0172235
3	ELEVATOR DRIVE GRAIN	1	80230164	2002190
3	ELEVATOR DRIVE GRAIN	1	80353584	2002283
4	ROTARY SCREEN DRIVE	1	80354338	0300064
5	TAILINGS ELEVATOR DRIVE	1	80323413	1602150
6	INTERMEDIATE REEL - KNIFE	1	80324391	0303257
6		1	80375977	0303261
7	FAN DRIVE	1	80230059	0102216
8	STRAW WALKER - ECCENTRIC	1	80333347	0305278
8	STRAW WALKER - ECCENTRIC	1	80378672	0305315
9	FAN DRIVE VARIABLE SPEED	1	80320935	0309132
10	DEUTZ ENGINE	1	80336386	1573238
11	DEUTZ ENGINE	1	80386155	0373225
12	THANK YOU GATES	1	80356913	0302134
13	REEL DRIVE	1	80333255	0202332
14	KNIFE DRIVE	1	80337415	1602195
15	REEL DRIVE VARIABLE SPEED	1	80334065	0310109
16	SICKLE KNIFE DRIVE	2	80362500	0301276
17	DRUM DRIVE VARIABLE SPEED	1	80336784	0313181
18	HYDRAULIC PUMP DRIVE	2	80335258	0401111
19	MAIN SHAFT DRIVE	1	80323646	0325214
20	UNLOADING SYSTEM	1	80333958	0302262
21	DRUM DRIVE VARIABLE SPEED	1	80336784	0313181
22	TRACTION DRIVE (FOR PULLEY DIA 450MM)	1	80230077	0812262
23	TRACTION DRIVE (FOR PULLEY DIA 526MM)	1	80354115	0812275
24	TRACTION DRIVE	1	80230077	0812262

1540 AL

			OE	
0	HYDRAULIC PUMP DRIVE	1	80398748	0324237
0	HYDRAULIC PUMP DRIVE	1	80350236	0324284
1	REEL DRIVE	1	80333255	0202332
2	KNIFE DRIVE	1	80337415	1602195
3	REEL DRIVE VARIABLE SPEED	1	80334065	0310109
4	SICKLE KNIFE DRIVE	2	80362500	0301276
5	DRUM DRIVE VARIABLE SPEED	1	80336784	0313181
6	HYDRAULIC PUMP DRIVE	2	80335258	0401111
7	MAIN SHAFT DRIVE	1	80323646	0325214
8	UNLOADING SYSTEM	1	80333958	0302262
9	DRUM DRIVE VARIABLE SPEED	1	80336784	0313181
9	DRUM DRIVE VARIABLE SPEED	1	80355797	0213186
12	ELEVATOR DRIVE GRAIN	1	80230164	2002190
12	ELEVATOR DRIVE GRAIN	1	80353584	2002283
13	ROTARY SCREEN DRIVE	1	80354338	0300064
14	TAILINGS ELEVATOR DRIVE	1	80323413	1602150
15	INTERMEDIATE REEL - KNIFE	1	80324391	0303257
16	FAN DRIVE	1	80230059	0102216
17	STRAW WALKER - ECCENTRIC	1	80333347	0305278
17	STRAW WALKER - ECCENTRIC	1	80378672	0305315
18	FAN DRIVE VARIABLE SPEED	1	80320935	0309132
19	DEUTZ ENGINE	1	80336386	1573238
19	FORD ENGINE	1	80371222	0172225
19	DEUTZ ENGINE	1	80386155	0373225

1545

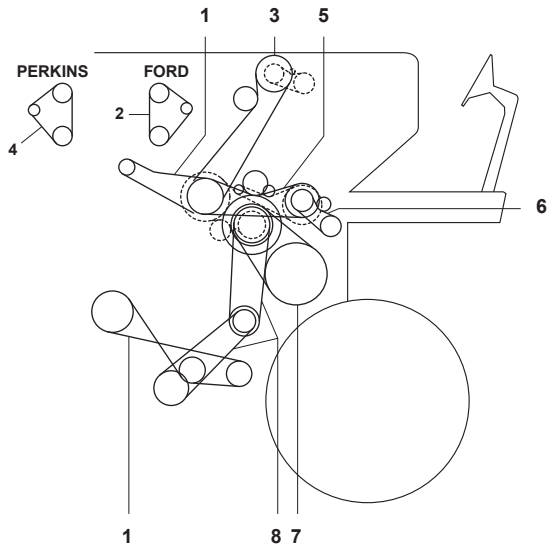

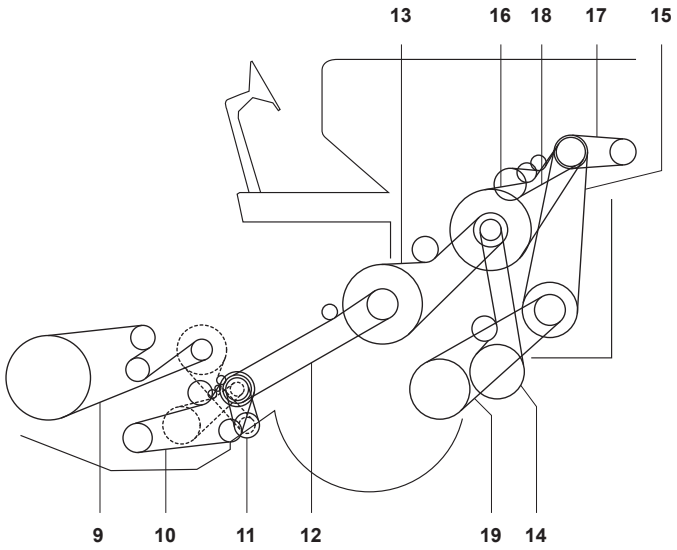

			OE	
1	STRAW WALKER DRIVE	2	80230108	1601218
2	FAN DRIVE (FORD ENGINE)	1	80371222	0172225
3	ELEVATOR DRIVE GRAIN	1	80230059	0102216
3	ELEVATOR DRIVE GRAIN	1	80230062	0302313
4	FAN DRIVE (PERKINS ENGINE)	1	80353882	0172235
5	TAILINGS ELEVATOR DRIVE	1	80230057	0302179
6	RETURN AUGER DRIVE	1	80230041	2601079
7	DRUM DRIVE VARIABLE SPEED	1	80230078	0213186
8	FAN DRIVE VARIABLE SPEED	2	80230056	0402155
9	REEL DRIVE	1	80333255	0202332
10	KNIFE DRIVE	1	80337415	1602195
11	REEL DRIVE VARIABLE SPEED	1	80334065	0310109
12	INTERMEDIATE SHAFT - KNIFE	2	80643353	0401279
13	STRAW ELEVATOR DRIVE	1	80230073	0330293
14	ECCENTRIC SHAFT DRIVE	1	80230060	0202235
15	TRACTION DRIVE	1	80230077	0812262
16	BEATER DRIVE	1	80230080	0381385
17	HYDRAULIC PUMP DRIVE	1	80230043	0401111
18	UNLOADING SYSTEM	1	80309364	1602150
19	TRACTION DRIVE (HIGH SPEED - PULLEY DIA 415MM)	1	80230077	0812262
19	TRACTION DRIVE (LOW SPEED - PULLEY DIA 500MM)	1	80354115	0812275

1550

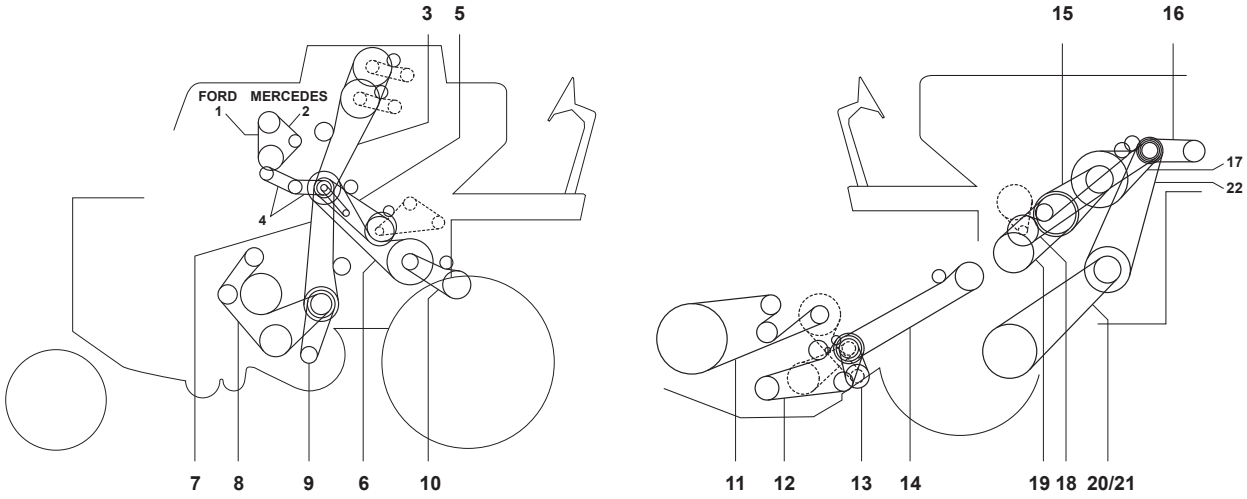

			OE	
1	FAN DRIVE (FORD)	2	80364033	0172225
2	FAN DRIVE (MERCEDES)	1	80230039	0372234
3	GRAIN ELEVATOR DRIVE	1	80230164	2002190
4	ROTARY SCREEN DRIVE	1	80354338	0300064
5	TAILINGS ELEVATOR DRIVE	1	80323413	1602150
6	INTERMEDIATE DRIVE: REEL AND KNIFE	1	80324391	0303257
7	FAN VARI - DRIVE	1	80230059	0102216
8	ECCENTRIC AND STRAWWALKER DRIVE	1	80333347	0305278
9	FAN DRIVE	1	80320935	0309132
10	GRAIN ELEVATOR EXTENSION	1	80353584	2002283
11	REEL DRIVE	1	80333255	0202332
12	KNIFE DRIVE	1	80337415	1602195
13	REEL VARIATOR	1	80334065	0310109
14	INTERMEDIATE DRIVE: SHAFT AND KNIFE	2	80362500	0301276
15	DRUM VARIATOR	1	80336784	0313181
16	HYDRAULIC PUMP DRIVE	2	80335258	0401111
17	MAIN SHAFT DRIVE	1	80323646	0325214
18	UNLOADING SYSTEM	1	80333958	0302262
19	DRUM VARI - DRIVE	1	80336784	0313181
20	GROUND SPEED FOR PULLEY, DIAMETER 450 MM	1	80330441	0313272
21	GROUND SPEED FOR PULLEY, DIAMETER 526 MM	1	80350776	0313283
22	GROUND SPEED VARI - DRIVE	1	80330441	0313272

1890

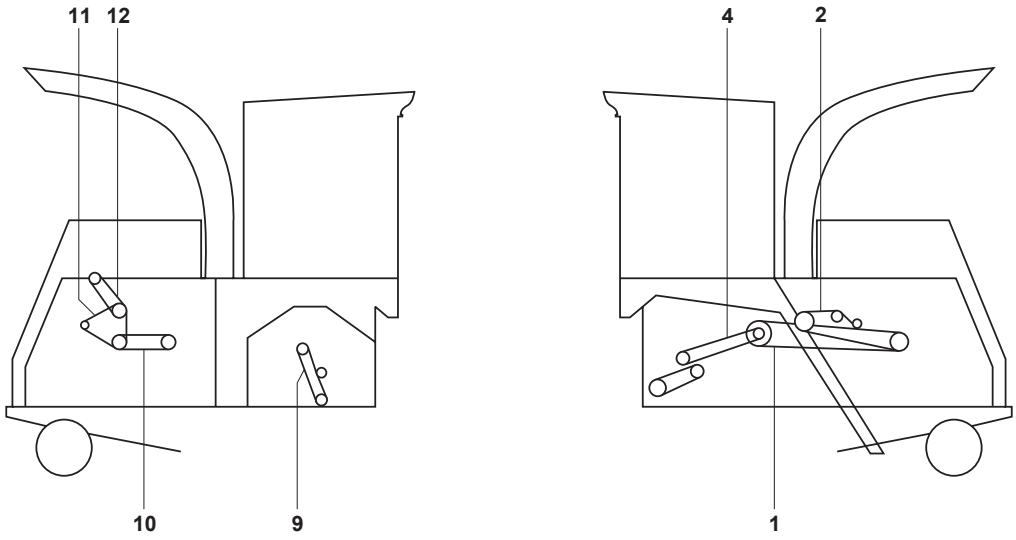

			OE	
1	CUTTERHEAD DRIVE	1	244853	0322421
1	CUTTERHEAD DRIVE - EUROPEAN MACHINES ONLY, HIGH SPEED CUTTERHEAD	1	197411	☎
2	FAN DRIVE	1	266408	1524289
2	FAN DRIVE	1	571926	0324279 EE-TECH
4	REVERSING GEARBOX DRIVE	1	245213	0322415
4	REVERSING GEARBOX DRIVE	1	616484	☎
4	REVERSING GEARBOX DRIVE, REPLACES 571929, 1895 - EUROPEAN MACHINES ONLY, HIGH SPEED CUTTERHEAD	1	619842	☎
9	AUGER DRIVE	1	239104	☎
10	HYDRAULIC PUMP DRIVE	1	573957	1900106
10	HYDRAULIC PUMP DRIVE	1	571927	1400071
11	FAN	1	613568	☎
11	FAN	1	571895	☎
12	A/C	1	264557	0172235
12	A/C	1	254084	0173234

1900

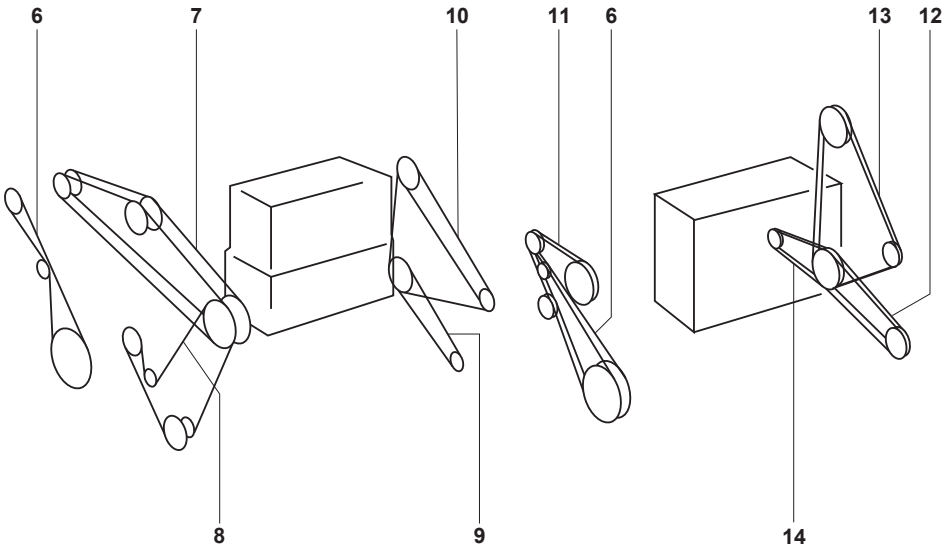

			OE	
6	BLOWER (LOW SPEED)	1	9611905	0369288
6	BLOWER (HIGH SPEED)	1	9611904	☎
6	BLOWER (EUROPEAN MACHINES ONLY)	1	9502745	0369281
7		1	632679	0157260
8	HYDRAULIC PUMP	1	601881	0368245
9	ALTERNATOR	1	80259346	1472227
10		1	630406	☎
10	FAN (EUROPEAN MACHINES ONLY)	1	616476	☎
11	CUTTERHEAD HOUSING	1	715130	0368238
12	ALTERNATOR	1	80259346	1472227
13	FAN	1	705807	0201177
14	AIRCONDITIONING COMPRESSOR	1	264557	0172235

1905

			OE	
1		1	747177	0272247
2		1	84058741	0170353
3		1	89835815	0372242
6		1	9611905	0369288
6		1	9502745	0369281
7		1	89513440	0337223
7		1	9835426	0337227
8		1	9502828	0368247
8		1	9835429	0368247
9		1	452023	0372262
10		1	421173	0372232
11		1	851792	0370253
13		1	851791	/

1915

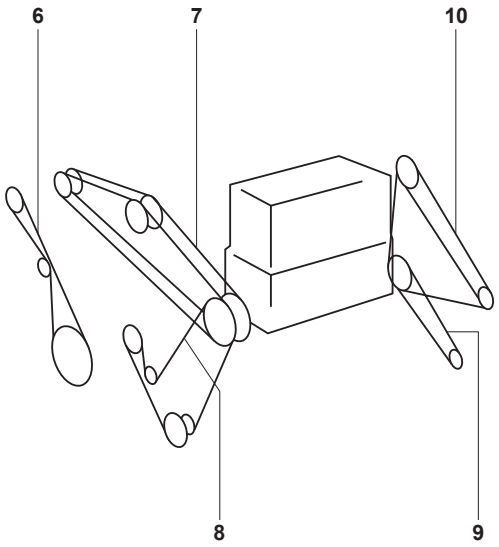

			OE	
6	BLOWER	1	9611905	0369288
7		1	632679	0157260
8	HYDRAULIC PUMP	1	601881	0368245
9	ALTERNATOR	1	858900	1472227
10	FAN	1	630406	☎

2100

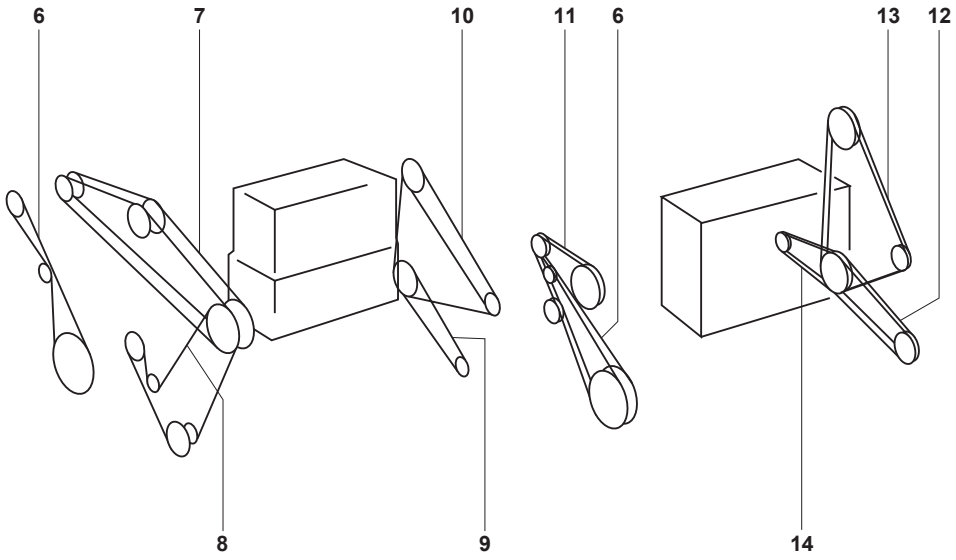

			OE	
6	BLOWER (LOW SPEED)	1	9611905	0369288
6	BLOWER (HIGH SPEED)	1	9611904	☎
6	BLOWER (EUROPEAN MACHINES ONLY)	1	9502745	0369281
7		1	632679	0157260
8	HYDRAULIC PUMP	1	601881	0368245
9		1	80259346	1472227
10	FAN	1	630406	☎
10	FAN (EUROPEAN MACHINES ONLY)	1	616476	☎
11	CUTTERHEAD HOUSING	1	715130	0368238
12	ALTERNATOR	1	80259346	1472227
13	FAN	1	705807	0201177
14	A-C COMPRESSOR	1	264557	0172235

2115

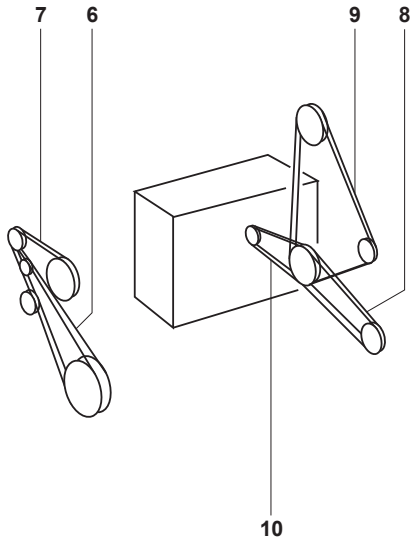

			OE	
6	BLOWER	1	9611905	0369288
6	BLOWER	1	9611904	☎
7	CUTTERHEAD	1	715130	0368238
8	ALTERNATOR	1	80259346	1472227
9		1	705807	0201177
10	COMPRESSOR	1	264557	0172235

2205

			OE	
1		1	747177	0272247
2		1	84058741	0170353
3		1	89835815	0372242
6		1	9611905	0369288
6		1	9502745	0369281
7		1	89513440	0337223
7		1	9835426	0337227
8		1	9502828	0368247
8		1	9835429	0368247
9		1	452023	0372262
10		1	421173	0372232
11		1	851792	0370253
13		1	851791	/

2305

			OE	
1		1	747177	0272247
2		1	84058741	0170353
3		1	89835815	0372242
6		1	9611905	0369288
6		1	9502745	0369281
7		1	89513440	0337223
7		1	9835426	0337227
8		1	9502828	0368247
8		1	9835429	0368247
9		1	452023	0372262
10		1	421173	0372232
11		1	851792	0370253
13		1	851791	/

8030

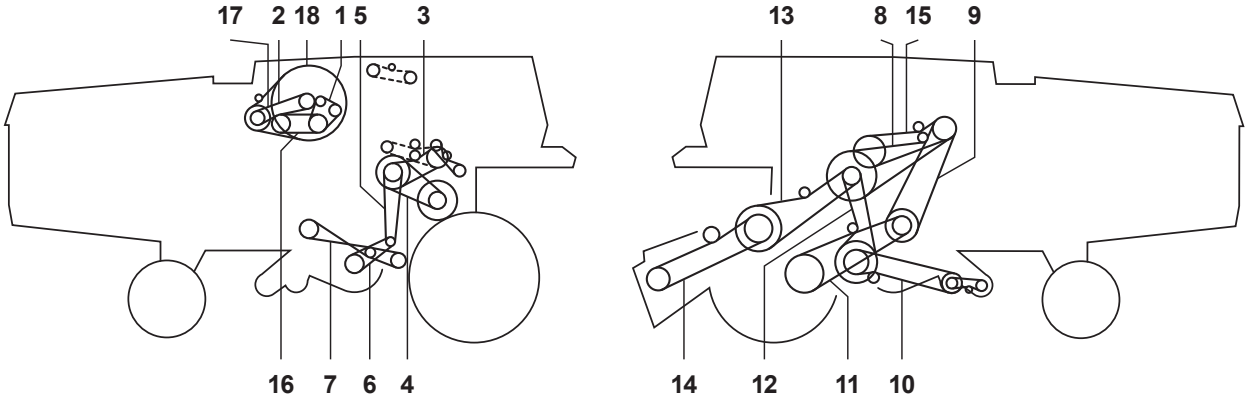

			OE	
1	TRANSMISSION (FORD)	1	80443634	0372223
1	TRANSMISSION (MERCEDES)	1	80444045	0372231
1	TRANSMISSION AIFO (FIAT)	2	80443636	0373221
2	HYDRAULIC PUMP DRIVE	1	80393519	0372257
3	GRAIN TANK UNLOADING AUGER DRIVE	1	80422725	0102137
4	DRUM VARI - DRIVE	1	80336784	0313181
5	FAN VARI - DRIVE	1	80230057	0302179
6	FAN VARI - DRIVE	1	80395955	0302134
7	ECCENTRIC AND STRAW WALKER DRIVE	1	80431784	0301217
8	MAIN DRIVE	1	80422281	0124297
8	MAIN DRIVE	1	80447031	0324299
9	GROUND SPEED VARI - DRIVE (UPPER)	1	80356024	0312262
10	ELEVATOR DRIVE	1	80422731	0302248
11	GROUND SPEED VARI - DRIVE (LOWER), STANDARD SPEED	1	80230077	0812262
11	GROUND SPEED VARI - DRIVE (LOWER), STANDARD SPEED	1	80439129	0312267
11	GROUND SPEED VARI - DRIVE (LOWER), LOW SPEED	1	80354115	0812275
12	ECCENTRIC SHAFT DRIVE	1	80387469	0302251
13	STRAW ELEVATOR DRIVE	1	66232	2602244
14	HEADER DRIVE	1	80330715	0202275
15	INTERMEDIATE SHAFT DRIVE - GRAIN TANK, BOTTOM AUGER	1	80447041	0302197
16	INTERMEDIATE SHAFT DRIVE, FAN AND ROTARY DUST SCREEN DRIVE	1	80427456	0101168
17	RADIATOR FAN DRIVE	1	80427455	1699317
18	ROTARY DUST SCREEN DRIVE	1	80422441	0300206

8040

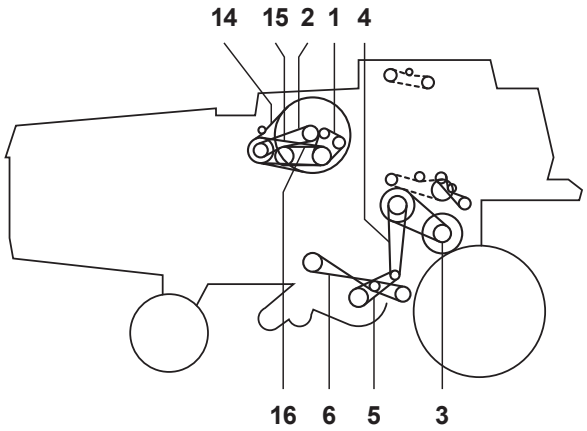

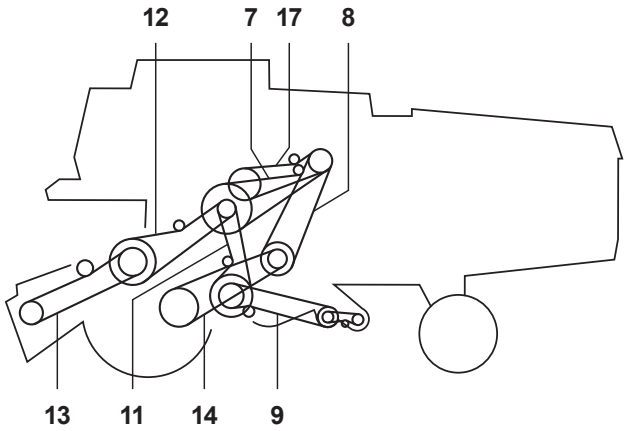

			OE	Gates
1	TRANSMISSION (FORD)	1	80443634	0372223
1	TRANSMISSION (MERCEDES)	1	80444045	0372231
1	TRANSMISSION AIFO (FIAT)	2	80443636	0373221
2	RADIATOR FAN DRIVE	1	80427455	1699317
3	DRUM VARI - DRIVE	1	80336784	0313181
4	FAN VARI - DRIVE	1	80230057	0302179
5	FAN VARI - DRIVE	1	80395955	0302134
6	ECCENTRIC AND STRAW WALKER DRIVE	1	80431784	0301217
7	MAIN DRIVE	1	80422281	0124297
7	MAIN DRIVE	1	80447031	0324299
8	GROUND SPEED VARI - DRIVE (UPPER)	1	80356024	0312262
9	ELEVATOR DRIVE	1	80422731	0302248
10	GROUND SPEED VARI - DRIVE (LOWER), STANDARD SPEED	1	80230077	0812262
10	GROUND SPEED VARI - DRIVE (LOWER), STANDARD SPEED	1	80439129	0312267
10	GROUND SPEED VARI - DRIVE (LOWER), LOW SPEED	1	80354115	0812275
11	ECCENTRIC SHAFT DRIVE	1	80387469	0302251
12	STRAW ELEVATOR DRIVE	1	66232	2602244
12	REINFORCED STRAW ELEVATOR DRIVE	1	80424563	0327292
13	HEADER DRIVE	1	80330715	0202275
13	HEADER DRIVE - REINFORCED STRAW ELEVATOR	2	80643353	0401279
14	ROTARY DUST SCREEN DRIVE	1	80422441	0300206
15	INTERMEDIATE SHAFT DRIVE, FAN AND ROTARY DUST SCREEN DRIVE	1	80427456	0101168
16	HYDRAULIC PUMP DRIVE	1	80393519	0372257
17	INTERMEDIATE SHAFT DRIVE - GRAIN TANK, BOTTOM AUGER	1	80230164	2002190
17	INTERMEDIATE SHAFT DRIVE - GRAIN TANK, BOTTOM AUGER	1	80447041	0302197

8050

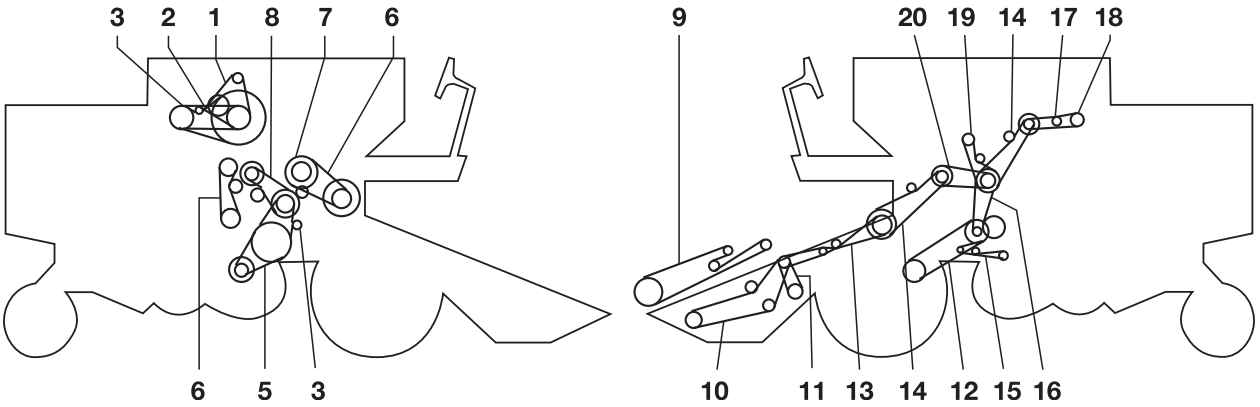

			OE	
1	ALTERNATOR AND WATERPUMP DRIVE (MERCEDES ENGINE)	1	80421173	0372232
1	ALTERNATOR DRIVE (FORD ENGINE 2704 ET)	1	80371222	0172225
1	FORD ENGINE	1	81540767	1472227
2	INTERMEDIATE SHAFT - SCREEN DRIVE	1	80399058	0372268
3	DUST FILTER	1	80381489	0300212
3	DUST SCREEN DRIVE	1	80457643	0300212
4	TAILINGS AUGER (SUPERIOR) (GRAIN)	1	80387469	0302251
5	FAN DRIVE	1	80378989	1901133
6	FAN DRIVE	1	80388280	2610138
7	DRUM DRIVE VARIABLE SPEED	1	80336784	0313181
8	BEATER DRIVE (201 = 4406001 - 4411999)	2	80396750	0402153
8	BEATER DRIVE (30 = 4322001 - ...)	2	80437033	0402155
9	INTERMEDIATE SHAFT - BEATER DRIVE	1	80395955	0302134
10	BEATER DRUM DRIVE	1	80451481	0325209
10	MAIN SHAFT DRIVE	1	80397298	0124208
11	DRUM DRIVE VARIABLE SPEED	1	80397297	0324279 EE-TECH
12	HYDRAULIC PUMP DRIVE	1	80230151	1601103
13	INTERMEDIATE SHAFT - SCREEN DRIVE	1	80389245	1401145
14	GROUND SPEED DRIVE (REDUCED SPEED)	1	80420606	0312172
14	GROUND SPEED DRIVE (STANDARD SPEED)	1	80230076	0112182
15	STRAW WALKER DRIVE	1	80605529	0401279
16	INTERMEDIATE SHAFT - AUGER (GRAIN)	1	80410896	0302146
17	STRAW ELEVATOR DRIVE	1	80393326	0323270 EE-TECH
18	INTERMEDIATE SHAFT - CUTTER DRIVE	2	80643353	0401279
19	GROUND SPEED DRIVE	1	80230077	0812262
19	SPEED VARIATOR DRIVE	1	80356024	0312262

8055

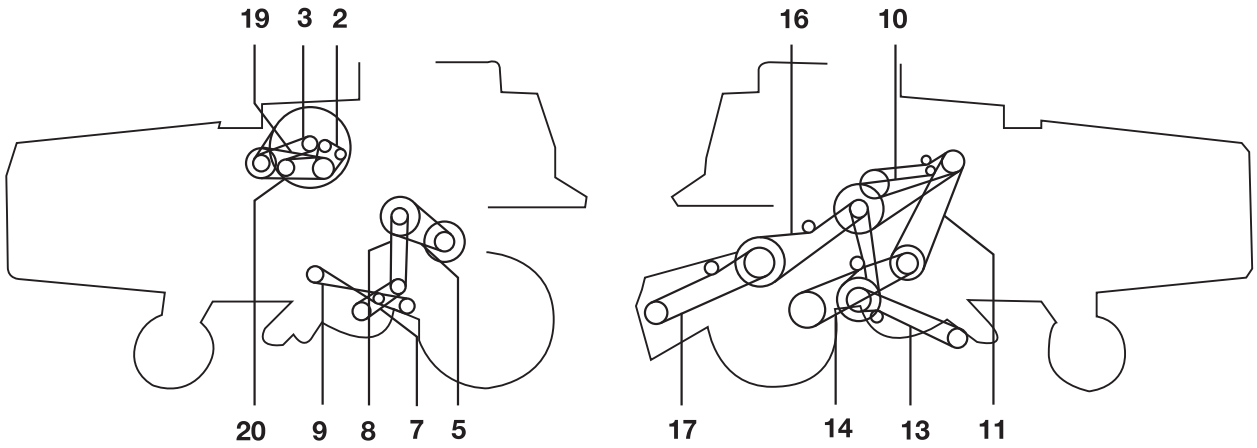

			OE	
2	ALTERNATOR AND WATERPUMP DRIVE (FORD ENGINE)	1	80443634	0372223
2	ALTERNATOR AND WATERPUMP DRIVE (MERCEDES ENGINE)	1	80444045	0372231
3	FAN DRIVE	1	80427455	1699317
5	DRUM DRIVE VARIABLE SPEED	1	80336784	0313181
7	FAN DRIVE	1	80230057	0302179
8	FAN DRIVE	1	80395955	0302134
9	STRAW WALKER DRIVE	1	80431784	0301217
10	BEATER DRIVE	1	80447031	0324299
13	ELEVATOR BOTTOM AUGER (GRAIN)	1	80422731	0302248
15	ECCENTRIC SHAFT DRIVE	1	80387469	0302251
16	STRAW ELEVATOR DRIVE	1	80066232	2602244
16	STRAW ELEVATOR DRIVE	1	80424563	0327292
17	HEADER DRIVE	2	80394426	0101298
18	ROTARY DUST SCREEN DRIVE	1	80422441	0300206
19	INTERMEDIATE SHAFT - DUST SCREEN DRIVE	1	80427456	0101168
20	HYDRAULIC PUMP DRIVE	1	80393519	0372257
21	INTERMEDIATE SHAFT	1	80447041	0302197

8060

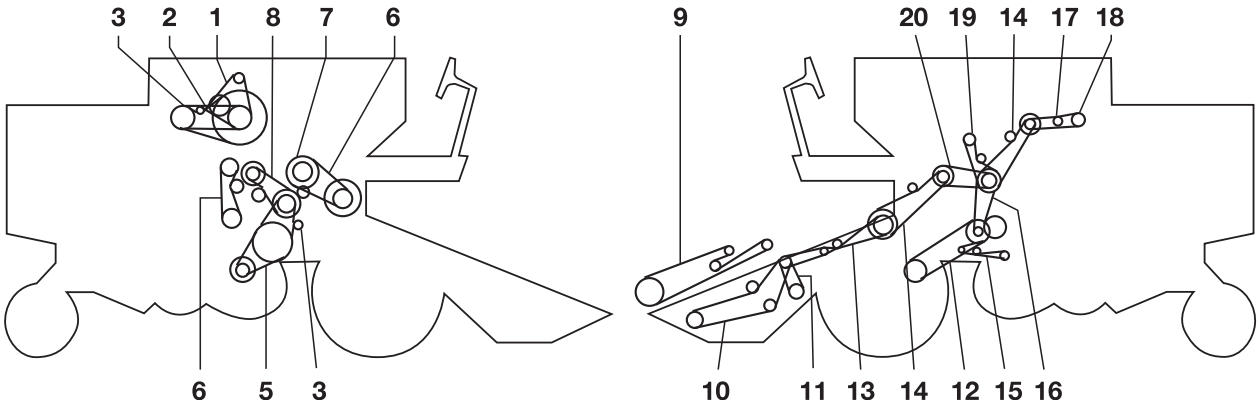

			OE	
1	ALTERNATOR AND WATERPUMP DRIVE (MERCEDES ENGINE)	1	80421173	0372232
1	ALTERNATOR DRIVE (FORD ENGINE 2704 ET)	1	80371222	0172225
1	FORD ENGINE	1	81540767	1472227
1	ONLY 8060 AIFO-FIAT ENGINE	1	80432802	0373225
2	INTERMEDIATE SHAFT - SCREEN DRIVE	1	80399058	0372268
3	DUST FILTER	1	80381489	0300212
3	DUST SCREEN DRIVE	1	80457643	0300212
4	TAILINGS AUGER (SUPERIOR) (GRAIN)	1	80387469	0302251
5	FAN DRIVE	1	80378989	1901133
6	FAN DRIVE	1	80388280	2610138
7	DRUM DRIVE VARIABLE SPEED	1	80336784	0313181
8	BEATER DRIVE (330 = 4313001 - 4321999)	2	80396750	0402153
8	BEATER DRIVE (40 = 4322001 - ...)	2	80437033	0402155
9	INTERMEDIATE SHAFT - BEATER DRIVE	1	80395955	0302134
10	BEATER DRUM DRIVE	1	80387454	0325209
11	DRUM DRIVE VARIABLE SPEED	1	80397297	0324279 EE-TECH
12	HYDRAULIC PUMP DRIVE	1	80230151	1601103
13	INTERMEDIATE SHAFT - SCREEN DRIVE	1	80389245	1401145
14	GROUND SPEED DRIVE (REDUCED SPEED)	1	80420606	0312172
14	GROUND SPEED DRIVE (STANDARD SPEED)	1	80230076	0112182
15	STRAW WALKER DRIVE	1	80605529	0401279
16	INTERMEDIATE SHAFT - AUGER (GRAIN)	1	80410896	0302146
17	STRAW ELEVATOR DRIVE	1	80393326	0323270 EE-TECH
18	INTERMEDIATE SHAFT - CUTTER DRIVE	2	80394426	0101298
19	GROUND SPEED DRIVE	1	80230077	0812262
19	SPEED VARIATOR DRIVE	1	80356024	0312262

8070

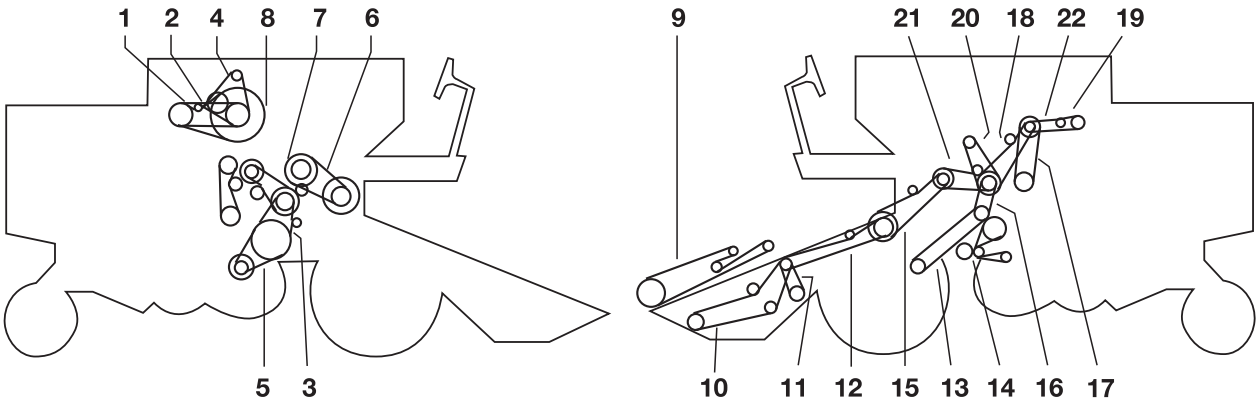

			OE	
1	REEL DRIVE	1	80333255	0202332
2	KNIFE DRIVE	1	80337415	1602195
3	REEL DRIVE VARIABLE SPEED	1	80334065	0310109
4	HEADER DRIVE	2	80394426	0101298
5	GROUND SPEED VARIATOR DRIVE	1	80356025	0313271
6	GROUND SPEED DRIVE (REDUCED SPEED) - PULLEY DIAMETER 350 MM	1	80417643	0213186
6	GROUND SPEED DRIVE (STANDARD SPEED) - PULLEY DIAMETER 404 MM	1	80321559	1413193
7	STRAW ELEVATOR DRIVE	1	80393326	0323270 EE-TECH
8	STRAW WALKER DRIVE	1	80605529	0401279
9	HYDROSTATIC PUMP DRIVE	1	80411543	0325248
10	DRUM DRIVE VARIABLE SPEED	1	80391650	0325282
11	INTERMEDIATE SHAFT	1	80389245	1401145
12	INTERMEDIATE SHAFT - AUGER (GRAIN)	1	80410896	0302146
13	RE-THRESHER DRIVE	1	80387454	0325209
13	RE-THRESHER DRIVE	1	80451481	0325209
14	HYDRAULIC PUMP DRIVE	1	80230151	1601103
15	FAN DRIVE	1	80384397	0372272
16	DUST SCREEN DRIVE	1	80381489	0300212
17	FAN DRIVE	1	80378989	1901133
18	TAILINGS ELEVATOR DRIVE	1	80387469	0302251
19	ALTERNATOR DRIVE (MERCEDES ENGINE OM 352A)	1	80421173	0372232
19	ALTERNATOR DRIVE (FORD ENGINE 2704 ET)	1	80371222	0172225
20	FAN DRIVE VARIABLE SPEED	1	80388280	2610138
21	DRUM DRIVE VARIABLE SPEED	1	80387460	0315188
22	COUNTERSHAFT DRIVE	2	80396750	0402153
22	COUNTERSHAFT DRIVE	2	80437033	0402155
23	VARIATOR DRIVE	1	80395955	0302134

8080

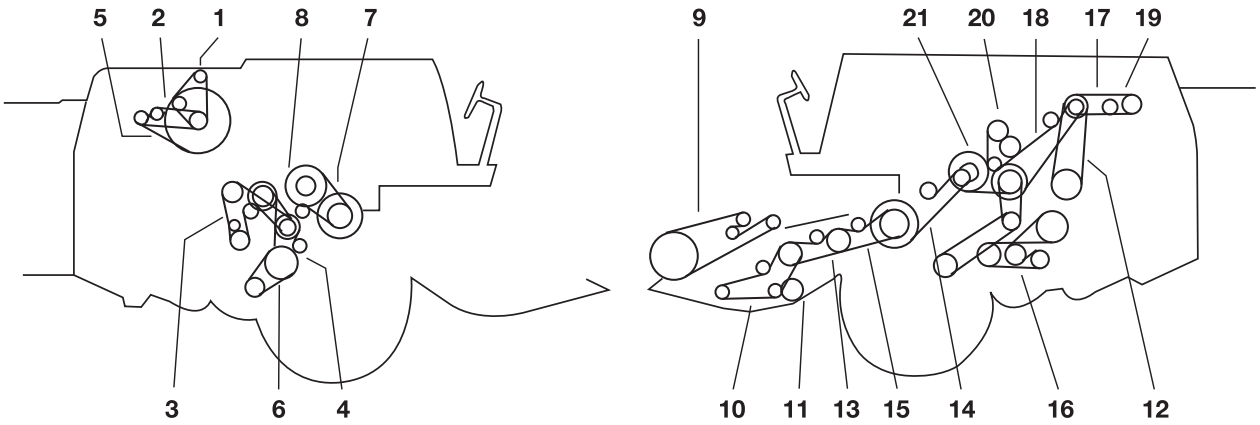

			OE	
1	REEL DRIVE	1	80333255	0202332
2	KNIFE DRIVE	1	80337415	1602195
3	REEL DRIVE VARIABLE SPEED	1	80334065	0310109
4	HYDROSTATIC PUMP DRIVE	1	80411543	0325248
5	HEADER DRIVE	2	80387931	0301147
6	STRAW ELEVATOR DRIVE	1	80393326	0323270 EE-TECH
7	HEADER DRIVE	2	80391143	0301217
8	STRAW WALKER DRIVE	1	80605529	0401279
9	HYDRAULIC PUMP DRIVE	1	80230151	1601103
10	DRUM DRIVE VARIABLE SPEED	1	80391650	0325282
11	INTERMEDIATE SHAFT	1	80389245	1401145
12	INTERMEDIATE SHAFT - AUGER (GRAIN)	1	80410896	0302146
13	RE-THRESHER DRIVE	1	80387454	0325209
13	RE-THRESHER DRIVE	1	80451481	0325209
14	ALTERNATOR DRIVE (MERCEDES ENGINE OM 401)	1	80393519	0372257
14	ALTERNATOR DRIVE (MERCEDES ENGINE OM 421)	1	80432642	0372258
15	FAN DRIVE (MERCEDES ENGINE OM 401)	1	80384397	0372272
16	DUST SCREEN DRIVE	1	80381489	0300212
17	FAN DRIVE	1	80378989	1901133
18	TAILINGS ELEVATOR DRIVE	1	80387469	0302251
20	FAN DRIVE VARIABLE SPEED	1	80388280	2610138
21	DRUM DRIVE VARIABLE SPEED	1	80387460	0315188
22	COUNTERSHAFT DRIVE	2	80396750	0402153
22	COUNTERSHAFT DRIVE	2	80437033	0402155
23	VARIATOR DRIVE	1	80395955	0302134

9630 - 9640 - 9645

			OE	
1	MAIN DRIVE	1	84017742	0357271
2	DRIVE	1	84026761	0300223
3	FAN DRIVE	1	84012975	0372307
4	ALTERNATOR DRIVE	1	84022807	0372275
5	COMPRESSOR DRIVE	1	89835815	0372242
5	COMPRESSOR DRIVE	1	80747177	0272247

AL 59 - HILLSIDE

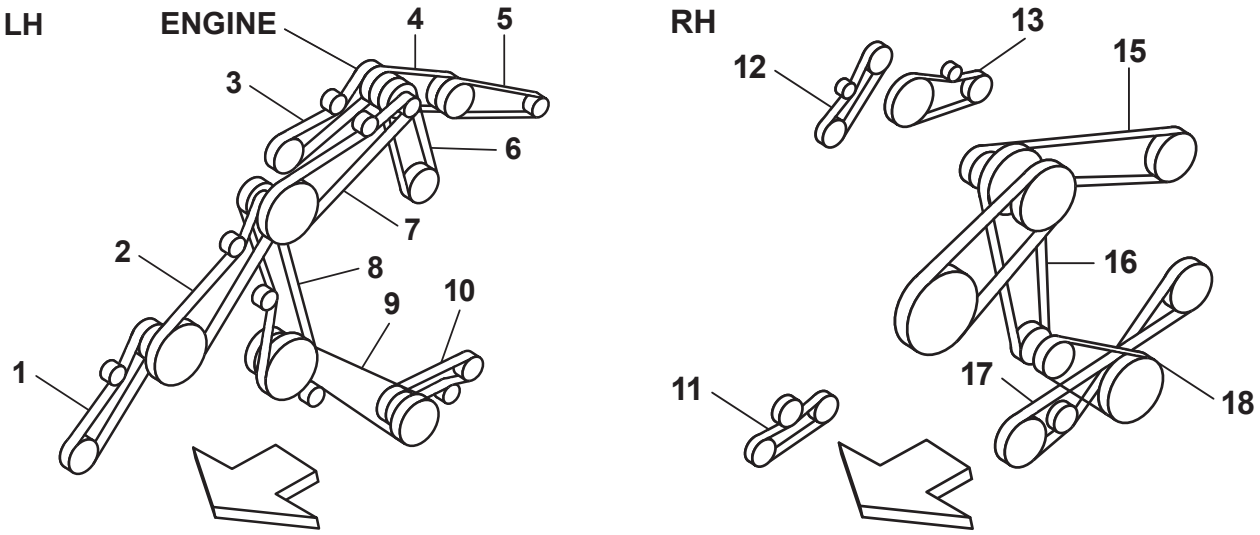

			OE	
1		1	84001336	0227353
2		1	80424563	0327292
3		1	89838606	0102216
4		1	84004444	0423318 EE-TECH
4		1	84019041	0302281
5		1	84022152	0302419
5		1	84041070	0423458
5		1	84041069	1423470
6		1	89818873	0325248
7		1	89817374	1524314 EE-TECH
8		1	80387469	0302251
9		1	80422731	0302248
10		1	80116140	Chain
11		1	89837879	Chain
12		1	80116140	Chain
13		1	80450600	Chain
14		1	80336784	0313181
15		1	89837412	1602150
16		1	89515075	0310193
17		1	80431784	0301217
18		1	89515076	0310157

CL 560 - HILLSIDE

			OE	
1	ALTERNATOR, WATERPUMP AND AIR COMPRESSOR DRIVE	1	84817638	0385359
2	DRUM DRIVE	1	84072772	1825189
2	DRUM DRIVE	1	84072815	1225216
2	HYDRAULIC PUMP DRIVE	1	80427456	0101168
5	ROTARY SCREEN DRIVE AND FAN	1	84817626	0372245
9	GRASS SEED EQUIPMENT	1	84452153	1510140
10	STRAW WALKER DRIVE	1	84073276	2601233
12	FAN VARI DRIVE	1	84073979	1510174
13	GRAIN ELEVATOR BOTTOM DRIVE	1	80422731	0302248
17	BLOW OFF SYSTEM AIR COMPRESSOR	2	84061465	1472251
19	HYDROSTATIC PUMP DRIVE	1	84607713	0324271 EE-TECH
23	STRAW ELEVATOR DRIVE	1	87705655	☎
26	ROTARY SCREEN DRIVE AND FAN	1	84989965	1400235
27	UNLOADING AUGER	1	84991836	0502215
28	MAIN DRIVE	1	84993120	0325376 EE-TECH
29	SHAKER SHOE DRIVE	1	84817635	0102176
35	HEADER DRIVE	1	84464057	0223304
36	GRASS SEED EQUIPMENT	1	84452112	0301131
36	ROTARY SEPARATOR DRIVE AND SHAFT	1	84073933	2602145
38	DRUM VARIATOR	1	84035748	0353283
51	CHOPPER DRIVE	1	84076421	0323453
52	CHOPPER DRIVE	1	84075955	1623354

CL 6060

			OE	
1	DRUM DRIVE	1	84072772	1825189
1	DRUM DRIVE (LOW DRUM SPEED)	1	84072815	1225216
2	HYDRAULIC PUMP DRIVE	1	427456	0101168
2	UNLOADING AUGER DRIVE	1	84462590	0502215
3	ROTARY SCREEN AND FAN DRIVE	1	84817626	0372245
6	KIT FOR LONG CONVEYOR	1	84971217	0327386
9	GRASS SEED EQUIPMENT	1	84452153	1510140
10	STRAW WALKER DRIVE	1	87521887	1401234
12	FAN VARI DRIVE	1	84073979	1510174
13	GRAIN ELEVATOR BOTTOM DRIVE	1	80422731	0302248
15	HEADER DRIVE	1	84464057	0223304
19	HYDROSTATIC PUMP DRIVE	1	87721960	0324261 EE-TECH
23	STRAW ELEVATOR DRIVE	1	87705655	☎
23	STRAW ELEVATOR DRIVE	1	89835120	0327381
28	MAIN DRIVE	1	84993120	0325376 EE-TECH
29	SHAKER SHOE DRIVE	1	84817635	0102176
36	GRASS SEED EQUIPMENT	1	84452112	0301131
36	ROTARY SEPARATOR DRIVE AND SHAFT	1	84073933	2602145
38	DRUM VARIATOR	1	84035748	0353283
51	CHOPPER DRIVE	1	84076421	0323453
52	CHOPPER DRIVE	1	84075955	1623354

CR 960

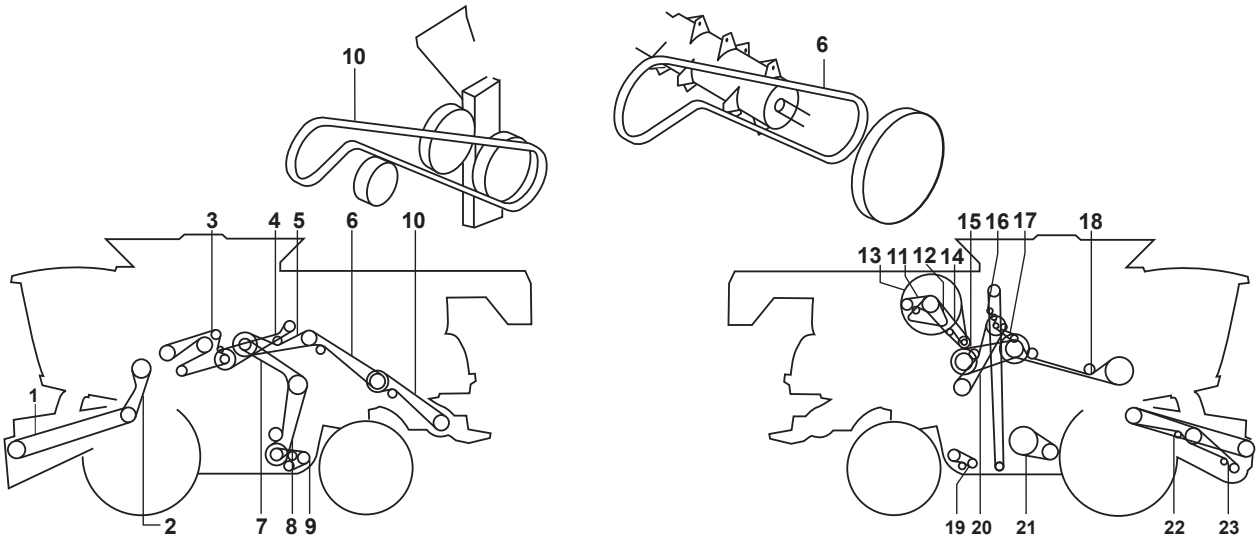

			OE	
2	STRAW ELEVATOR DRIVE	1	84072421	0325537
4	UNLOADING AUGER	1	87011585	0323285
5	MAIN DRIVE	1	87580097	0225286 EE-TECH
6	CHOPPER DRIVE	1	84320963	0223304
7	BEATER DRIVE	1	87580099	1423267
8	BEATER DRIVE	1	86566287	0302258
9	SHAKER SHOE DRIVE - SELF-LEVELLING	2	84056913	1201153
10	CHOPPER DRIVE	1	84320963	0223304
11	AIR COMPRESSOR	1	99472776	0342156
12	DRIVE, ROTARY SCREEN AND FAN	2	445930	0372271
13	DRIVE, ROTARY SCREEN AND FAN	1	84057085	0100272
14	ALTERNATOR DRIVE	1	747177	0272247
15	ROTOR DRIVE, HIGH SPEED	1	86592734	0751201
15	ROTOR VARIATOR	1	87053804	0751201
18	FEEDER DRIVE	1	86589482	0325416
19	TAILINGS ELEVATORS, BOTTOM AUGER AND (RIGHT HAND)	2	84058339	0101087
20	GRAIN ELEVATOR, DRIVE	1	87319821	1923287 EE-TECH
21	CLEANING FAN, FIXED SHOE, SIEVE FIXED	1	919739	0303147
22	FAN VARI-DRIVE	1	84817627	0303144

CR 980

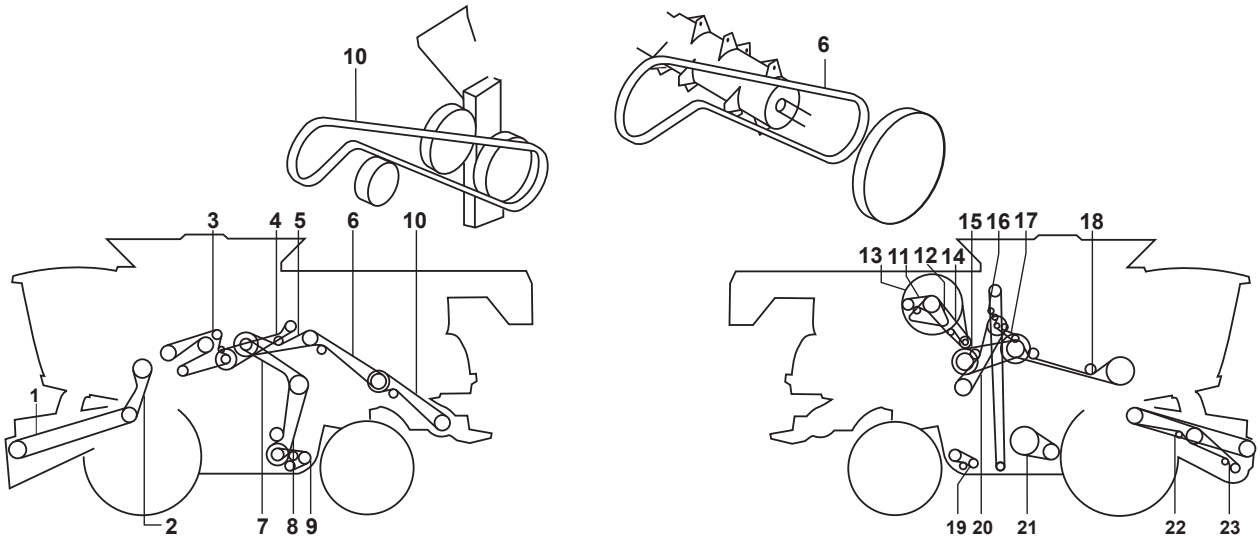

			OE	
2	STRAW ELEVATOR DRIVE	1	84072421	0325537
4	UNLOADING AUGER	1	87011585	0323285
5	MAIN DRIVE	1	87580097	0225286 EE-TECH
6	CHOPPER DRIVE	1	84320963	0223304
7	BEATER DRIVE	1	87580099	1423267
8	BEATER DRIVE	1	86566287	0302258
9	SHAKER SHOE DRIVE - SELF-LEVELLING	2	84056913	1201153
10	CHOPPER DRIVE	1	84320963	0223304
11	AIR CONDITIONING DRIVE	1	504020489	0342160
12	DRIVE, ROTARY SCREEN AND FAN	2	445930	0372271
13	DRIVE, ROTARY SCREEN AND FAN	1	84057085	0100272
14	ALTERNATOR DRIVE	1	747177	0272247
15	ROTOR DRIVE, HIGH SPEED	1	86563175	0351195
15	ROTOR VARIATOR	1	87053803	0351803
18	FEEDER DRIVE	1	86589482	0325416
19	TAILINGS ELEVATORS, BOTTOM AUGER AND (RIGHT HAND)	2	84058339	0101087
20	GRAIN ELEVATOR, DRIVE	1	87319821	1923287 EE-TECH
21	CLEANING FAN, FIXED SHOE, SIEVE FIXED	1	919739	0303147
22	FAN VARI-DRIVE	1	84817627	0303144

CR 6090 - CR 7090

ENGINE DRIVES

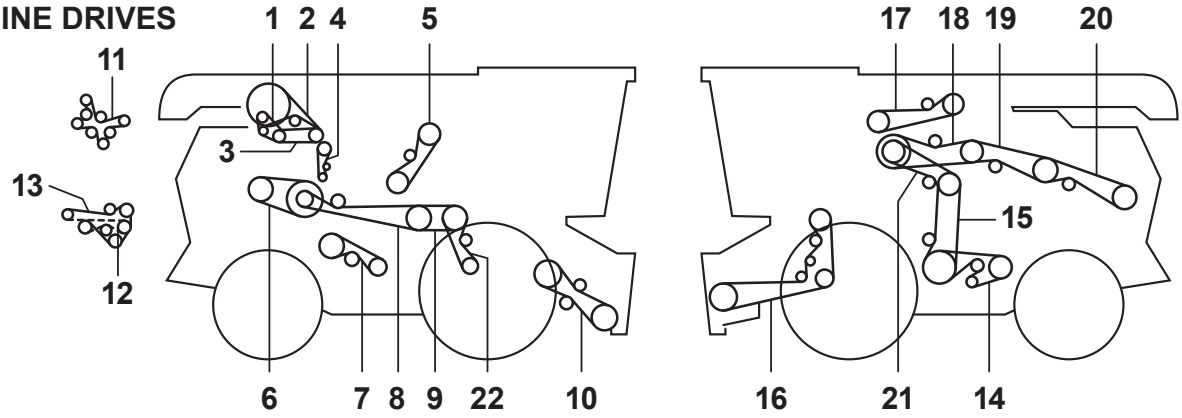

			OE	Gates
1	FAN DRIVE	1	918062	0372268
2	ROTARY SCREEN (UPPER)	1	87664428	0300267
3	ROTARY SCREEN (LOWER)	1	87556830	0173249
4	DUST SCREEN ASPIRATOR (SERIAL FOLLOWING NR 01/09/2012)	1	84422774	0372231
5	GRAIN ELEVATOR DRIVE	1	84137965	1923287 EE-TECH
6	DRUM VARIATOR (PRIOR TO SER NR 29/07/2012)	1	87676816	0351319
6	DRUM VARIATOR (FOLLOWING SER NR 29/07/2012)	1	84491659	☎
7	BOTTOM AUGER AND TAILINGS ELEVATOR (RIGHT HAND)	1	84332132	0100187
8	HEADER DRIVE (CORN AND BEAN ONLY)	1	84352808	0224406 EE-TECH
8	HEADER DRIVE (GRAIN ONLY)	1	84352807	1423404
8	HEADER DRIVE, VARIABLE (CORN AND BEAN ONLY) (PRIOR TO SER NR 27/02/2012)	1	84298895	0324317
8	HEADER DRIVE, VARIABLE (CORN AND BEAN ONLY) (FOLLOWING SER NR 27/02/2012)	1	84589013	0324317
9	FEEDER DRIVE VARIATOR (CORN AND BEAN ONLY)	1	87583907	0251907
10	FEEDER DRIVE (RIGHT HAND)	1	84254480	1524289
11	ENGINE BELT (F2C, FE613A, A017 AND A018)	1	84292639	0285346
14	SHAKER SHOE DRIVE, SELF LEVELLING	2	84353448	0101156
15	BEATER, INTERMEDIATE DRIVE	1	87315599	2002253
16	FEEDER DRIVE (LEFT HAND)	1	84274885	0323541
16	FEEDER DRIVE (LEFT HAND)	1	87545653	0325545
17	UNLOADER AUGER DRIVE	1	87011585	0323285
18	MAIN DRIVE	2	87545651	0326289
19	CHOPPER, INTERMEDIATE DRIVE (FRONT)	1	87580100	1423301 EE-TECH
19	CHOPPER, INTERMEDIATE DRIVE (FOR CHOPPER READY DRIVE)	1	87580100	1423301 EE-TECH
20	CHOPPER, INTERMEDIATE DRIVE (REAR)	1	87580100	1423301 EE-TECH
21	BEATER DRIVE	1	87546479	1423286

CR 8080

ENGINE DRIVES

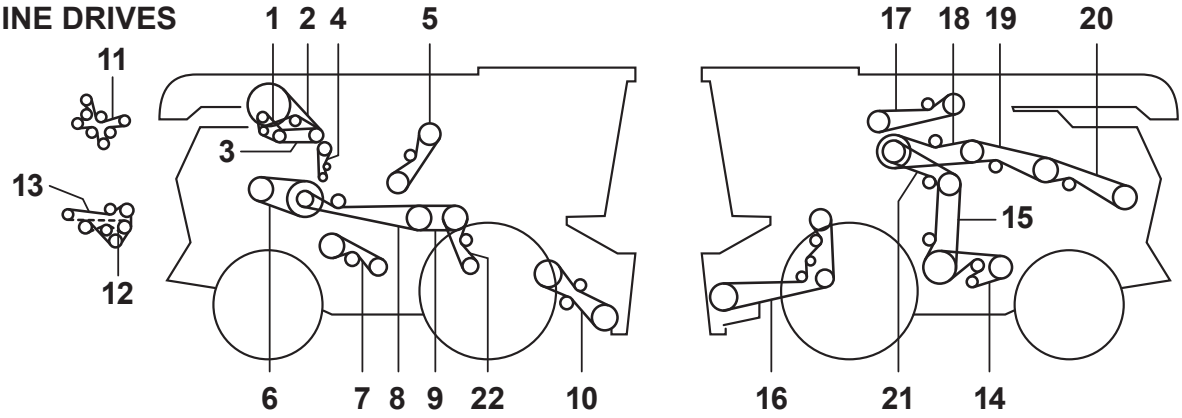

			OE	
1	FAN DRIVE	1	87284244	1472273
2	ROTARY SCREEN (UPPER)	1	87664428	0300267
3	ROTARY SCREEN (LOWER)	1	747177	0272247
4	DUST SCREEN ASPIRATOR (SERIAL FOLLOWING NR 01/09/2012)	1	84422774	0372231
5	GRAIN ELEVATOR DRIVE	1	84137965	1923287 EE-TECH
6	DRUM VARIATOR (PRIOR TO SER NR 29/07/2012)	1	87676816	0351319
6	DRUM VARIATOR (FOLLOWING SER NR 29/07/2012)	1	84491659	☎
7	BOTTOM AUGER AND TAILINGS ELEVATOR (RIGHT HAND)	1	84332132	0100187
8	HEADER DRIVE (CORN AND BEAN ONLY)	1	84352808	0224406 EE-TECH
8	HEADER DRIVE (GRAIN ONLY)	1	84352807	1423404
8	HEADER DRIVE, VARIABLE (CORN AND BEAN ONLY) (PRIOR TO SER NR 27/02/2012)	1	84298895	0324317
8	HEADER DRIVE, VARIABLE (CORN AND BEAN ONLY) (FOLLOWING SER NR 27/02/2012)	1	84589013	0324317
9	FEEDER DRIVE VARIATOR (CORN AND BEAN ONLY)	1	87583907	0251907
10	FEEDER DRIVE (RIGHT HAND)	1	84254480	1524289
11	ENGINE BELT (F2C, FE613A, A017 AND A018)	1	84292639	0285346
12	AIR CONDITIONING BELT (F3E E0684S E913 AND F3A FE613A A002)	1	84238514	0187250
13	ALTERNATOR, WATERPUMP BELT (F3E E0684S E913 AND F3A FE613A A002)	1	84238513	0342200
14	SHAKER SHOE DRIVE, SELF LEVELLING	2	84353448	0101156
15	BEATER, INTERMEDIATE DRIVE	1	87315599	2002253
16	FEEDER DRIVE (LEFT HAND)	1	84274885	0323541
16	FEEDER DRIVE (LEFT HAND)	1	87545653	0325545
17	UNLOADER AUGER DRIVE	1	87011585	0323285
18	MAIN DRIVE	1	87545651	0326289
19	CHOPPER, INTERMEDIATE DRIVE (FRONT)	1	87580100	1423301 EE-TECH
19	CHOPPER, INTERMEDIATE DRIVE (FOR CHOPPER READY DRIVE)	1	87580100	1423301 EE-TECH
20	CHOPPER, INTERMEDIATE DRIVE (REAR)	1	87580100	1423301 EE-TECH
21	BEATER DRIVE	1	87546479	1423286

CR 8090

ENGINE DRIVES

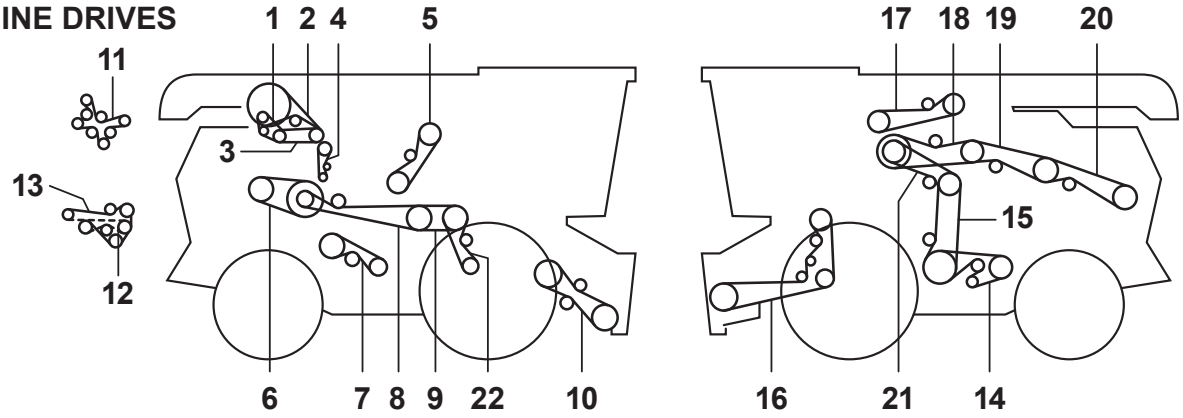

			OE	Gates
1	FAN DRIVE	1	87284244	1472273
2	ROTARY SCREEN (UPPER)	1	87664428	0300267
3	ROTARY SCREEN (LOWER)	1	747177	0272247
4	DUST SCREEN ASPIRATOR (SERIAL FOLLOWING NR 01/09/2012)	1	84422774	0372231
5	GRAIN ELEVATOR DRIVE	1	84137965	1923287 EE-TECH
6	DRUM VARIATOR (PRIOR TO SER NR 29/07/2012)	1	87540195	0351195
6	DRUM VARIATOR (FOLLOWING SER NR 29/07/2012)	1	84491658	Replaced by 47837780
7	BOTTOM AUGER AND TAILINGS ELEVATOR (RIGHT HAND)	1	84332132	0100187
8	HEADER DRIVE (CORN AND BEAN ONLY)	1	84352808	0224406 EE-TECH
8	HEADER DRIVE (GRAIN ONLY)	1	84352807	1423404
8	HEADER DRIVE, VARIABLE (CORN AND BEAN ONLY) (PRIOR TO SER NR 27/02/2012)	1	84298895	0324317
8	HEADER DRIVE, VARIABLE (CORN AND BEAN ONLY) (FOLLOWING SER NR 27/02/2012)	1	84589013	0324317
8	HEADER DRIVE (ADVANCED STONE PROTECT)	1	84298895	0324317
8	HEADER DRIVE (ADVANCED STONE PROTECT)	1	84589013	0324317
9	FEEDER DRIVE VARIATOR (CORN AND BEAN ONLY)	1	87583907	0251907
9	FEEDER DRIVE VARIATOR (ADVANCED STONE PROTECT)	1	84398996	1424218
10	FEEDER DRIVE (RIGHT HAND)	1	84254480	1524289
11	ENGINE BELT (F2C, FE613A, A017 AND A018)	1	84292639	0285346
12	AIR CONDITIONING BELT (F3E E0684S E913 AND F3A FE613A A002)	1	84238514	0187250
13	ALTERNATOR, WATERPUMP BELT (F3E E0684S E913 AND F3A FE613A A002)	1	84238513	0342200
14	SHAKER SHOE DRIVE, SELF LEVELLING	2	84353448	0101156
15	BEATER, INTERMEDIATE DRIVE	1	87315599	2002253
16	FEEDER DRIVE (LEFT HAND)	1	84274885	0323541
16	FEEDER DRIVE (LEFT HAND)	1	87545653	0325545
16	FEEDER DRIVE (ADVANCED STONE PROTECT)	1	84394081	0325596
17	UNLOADER AUGER DRIVE	1	87011585	0323285
18	MAIN DRIVE	1	87545651	0326289
19	CHOPPER, INTERMEDIATE DRIVE (FRONT)	1	87557181	0324303
19	CHOPPER, INTERMEDIATE DRIVE (FOR CHOPPER READY DRIVE)	1	87580100	1423301 EE-TECH
20	CHOPPER, INTERMEDIATE DRIVE (REAR)	1	84188121	0224306 EE-TECH
21	BEATER DRIVE	1	87546479	1423286
22	STONE TRAP DRIVE (LOW SPEED) AND ADVANCED STONE PROTECT	1	84398998	0324263
23	STONE TRAP DRIVE (LOW SPEED) AND ADVANCED STONE PROTECT	1	84398997	0323238

CR 9040

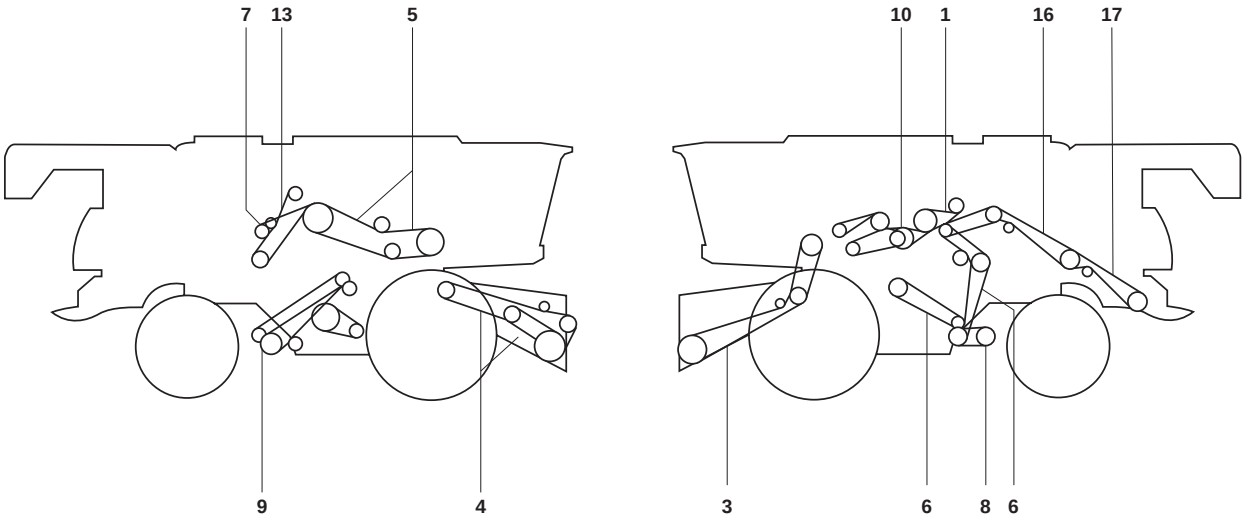

			OE	
1	MAIN DRIVE	1	87580097	0225286 EE-TECH
3	SECONDARY STRAW ELEVATOR DRIVE FOR STANDARD DRIVE	1	84072421	0325537
5	PRIMARY FEEDER DRIVE WITH VARIATOR	1	86729163	0724325 EE-TECH
5	PRIMARY FEEDER DRIVE FOR SPEED-UP DRIVE WITH VARIATOR	1	87583899	0324316 EE-TECH
5	PRIMARY FEEDER DRIVE WITHOUT VARIATOR	1	86589482	0325416
5	VARIABLE SPEED FEEDER DRIVE WITH VARIATOR FOR STANDARD DRIVE	1	86596143	0351143
5	VARIABLE SPEED FEEDER DRIVE FOR SPEED-UP DRIVE WITH VARIATOR	1	87583907	0251907
6	BEATER DRIVE	1	87580099	1423267
6	SHAKER SHOE DRIVE	1	87315599	2002253
7		1	87053804	0751201
8	RETURN DRIVE	1	87325684	0101156
9	RETURN ELEVATOR DRIVE	1	84058339	0101087
10	UNLOADING AUGER DRIVE	1	87011585	0323285
13	GRAIN ELEVATOR DRIVE	1	87319821	1923287 EE-TECH
13	GRAIN ELEVATOR DRIVE	1	87319821	1923287 EE-TECH
16	CHOPPER DRIVE WITH CHOPPER SPREADER	1	87031779	1423301 EE-TECH
17	CHOPPER DRIVE	1	87580100	1423301 EE-TECH

CR 9060

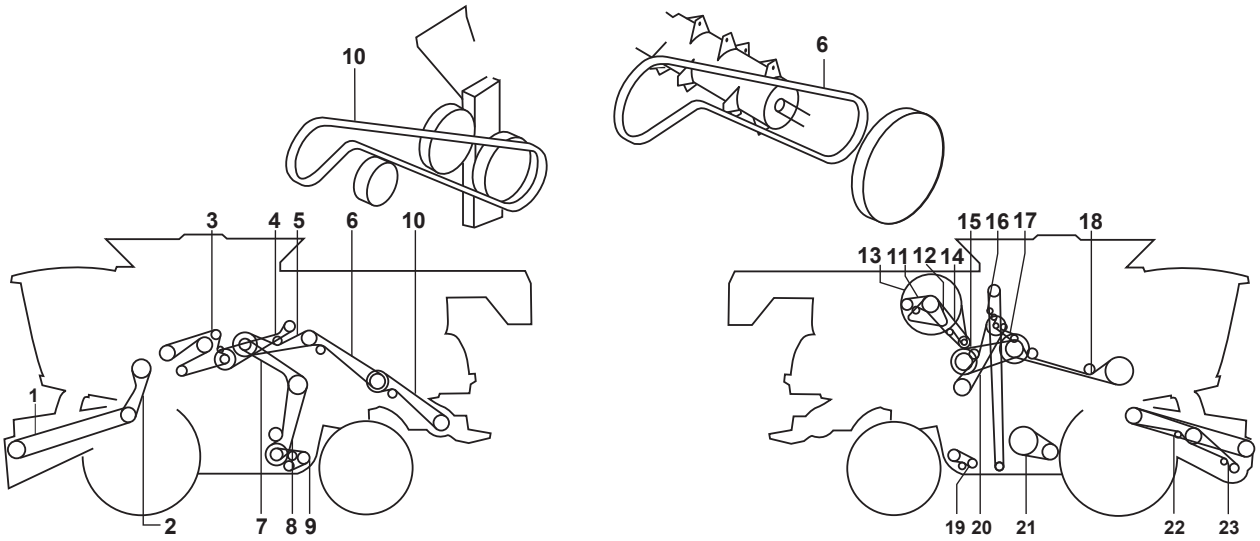

			OE	
1-2	STRAW ELEVATOR DRIVE	1	84072421	0325537
4	UNLOADING AUGER	1	87011585	0323285
5	MAIN DRIVE (BSN C575)	1	86566606	0225286 EE-TECH
5	MAIN DRIVE (ASN D576)	1	87580097	0225286 EE-TECH
6	CHOPPER DRIVE (BSN C579)	1	87031779	1423301 EE-TECH
6	CHOPPER DRIVE (ASN D580)	1	87580100	1423301 EE-TECH
7	BEATER DRIVE (BSN C579)	1	86566286	1423267
7	BEATER DRIVE (ASN D580)	1	87580099	1423267
8	BEATER DRIVE	1	86566287	0302258
9	SHAKER SHOE DRIVE - SELF-LEVELLING	2	84056913	1201153
10	CHOPPER DRIVE (BSN C723)	1	87526022	0223304
10	CHOPPER DRIVE (ASN D724)	1	84168012	0223304
11	AIR CONDITIONER UNIT : MOUNTING GROUP - WITHOUT HEATING	1	84818007	0342156
12	DRIVE, ROTARY SCREEN AND FAN	2	445930	0372271
13	DRIVE, ROTARY SCREEN AND FAN (BSN C599)	1	84057085	0100272
13	DRIVE, ROTARY SCREEN AND FAN (ASN D600)	1	87664428	0300267
14	DRIVE, ROTARY SCREEN AND FAN	1	87556830	0173249
15	ROTOR VARIATOR	1	87053804	0751201
15	ROTOR VARIATOR (REINFORCED BELT)	1	87676816	0351319
18	FEEDER DRIVE	1	86589482	0325416
19	TAILINGS ELEVATORS, BOTTOM AUGER AND (RIGHT HAND) (BSN C675)	2	84058339	0101087
20	GRAIN ELEVATOR DRIVE	1	87319821	1923287 EE-TECH
21	FAN VARI-DRIVE	1	84817627	0303144
24	GRASS SEED EQUIPMENT - ACCESSORIES	1	84023277	0303117

CR 9060 ELEVATION

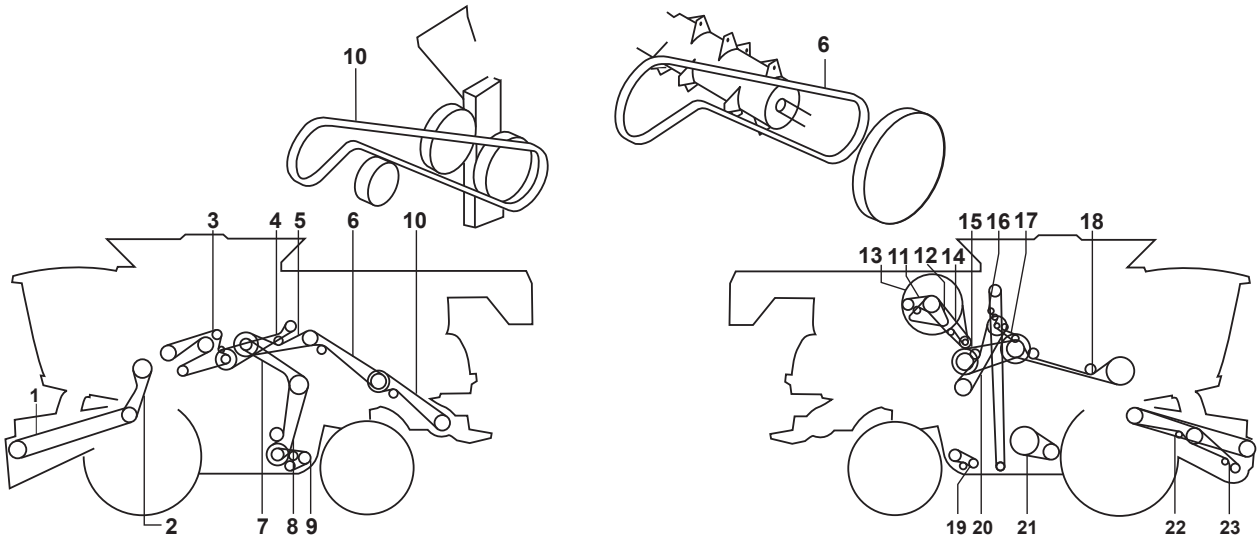

			OE	
1-2	STRAW ELEVATOR DRIVE	1	84072421	0325537
4	UNLOADING AUGER	1	87011585	0323285
5	MAIN DRIVE (BSN C575)	1	86566606	0225286 EE-TECH
5	MAIN DRIVE (ASN D576)	1	87580097	0225286 EE-TECH
6	CHOPPER DRIVE (BSN C579)	1	87031779	1423301 EE-TECH
6	CHOPPER DRIVE (ASN D580)	1	87580100	1423301 EE-TECH
7	BEATER DRIVE (BSN C579)	1	86566286	1423267
7	BEATER DRIVE (ASN D580)	1	87580099	1423267
8	BEATER DRIVE	1	86566287	0302258
9	SHAKER SHOE DRIVE - SELF-LEVELLING	2	84056913	1201153
10	CHOPPER DRIVE (BSN C723)	1	87526022	0223304
10	CHOPPER DRIVE (ASN D724)	1	84168012	0223304
11	AIR CONDITIONER UNIT : MOUNTING GROUP (BSN C635)	1	84818007	0342156
11	AIR CONDITIONER UNIT : MOUNTING GROUP (ASN D604)	1	84818008	0342161
11	AIR CONDITIONER UNIT : MOUNTING GROUP - WITHOUT HEATING	1	84818007	0342156
12	DRIVE, ROTARY SCREEN AND FAN	2	445930	0372271
13	DRIVE, ROTARY SCREEN AND FAN (BSN C599)	1	84057085	0100272
13	DRIVE, ROTARY SCREEN AND FAN (ASN D600)	1	87664428	0300267
14	DRIVE, ROTARY SCREEN AND FAN	1	87556830	0173249
15	ROTOR VARIATOR	1	87622201	0351319
15	ROTOR VARIATOR (REINFORCED BELT)	1	87676816	0351319
15	ROTOR VARIATOR - VARIABLE FEEDER (BSN C659)	1	86596143	0351143
15	ROTOR VARIATOR - VARIABLE FEEDER (ASN D660)	1	87583907	0251907
18	FEEDER DRIVE	1	86589482	0325416
18	FEEDER DRIVE - VARIABLE (BSN C659)	1	86729163	0724325 EE-TECH
18	FEEDER DRIVE - VARIABLE (ASN D660)	1	87583899	0324316 EE-TECH
19	TAILINGS ELEVATORS, BOTTOM AUGER AND (RIGHT HAND) (BSN C675)	2	84058339	0101087
19	TAILINGS ELEVATORS, BOTTOM AUGER AND (RIGHT HAND) (BSN F676719)	2	84455757	0300187
19	TAILINGS ELEVATORS, BOTTOM AUGER AND (RIGHT HAND) (ASN D720)	2	84196804	0100187

CR 9060 ELEVATION (CONTINUED)

			OE	
20	GRAIN ELEVATOR DRIVE	1	87319821	1923287 EE-TECH
21	FAN VARI-DRIVE	1	84817627	0303144
24	GRASS SEED EQUIPMENT - ACCESSORIES	1	84023277	0303117
25	HYDRAULIC FAN DRIVE	1	87636309	1401137

CR 9070 ELEVATION

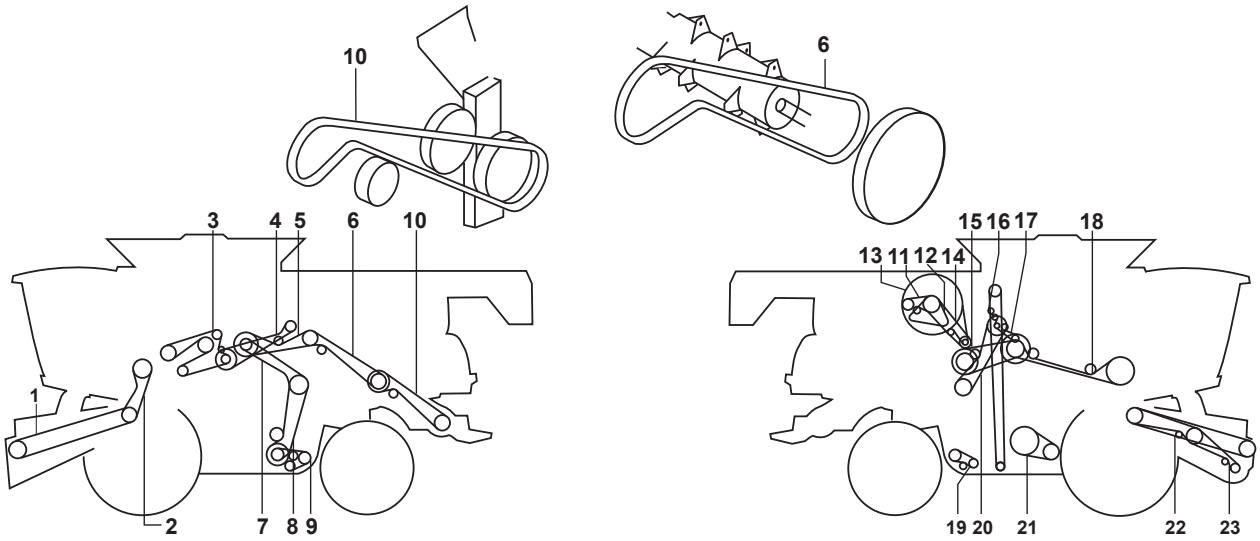

			OE	
1-2	STRAW ELEVATOR DRIVE	1	87545653	0325545
4	UNLOADING AUGER	1	87011585	0323285
5	MAIN DRIVE	1	87545651	0326289
6	CHOPPER DRIVE (BSN C579)	1	87031779	1423301 EE-TECH
6	CHOPPER DRIVE (ASN D580)	1	87580100	1423301 EE-TECH
7	BEATER DRIVE	1	87546479	1423286
8	BEATER DRIVE	1	87315599	2002253
9	SHAKER SHOE DRIVE - SELF-LEVELLING	2	87325684	0101156
10	CHOPPER DRIVE (BSN C723)	1	87526022	0223304
10	CHOPPER DRIVE (ASN D724)	1	84168012	0223304
11	AIR CONDITIONER UNIT : MOUNTING GROUP (BSN C635)	1	84818007	0342156
11	AIR CONDITIONER UNIT : MOUNTING GROUP (ASN D604)	1	84818008	0342161
12	DRIVE, ROTARY SCREEN AND FAN	2	747177	0272247
13	DRIVE, ROTARY SCREEN AND FAN (BSN C599)	1	84057085	0100272
13	DRIVE, ROTARY SCREEN AND FAN (ASN D600)	1	87664428	0300267
14	DRIVE, ROTARY SCREEN AND FAN	2	87284244	1472273
15	ROTOR VARIATOR	1	87622201	0351319
15	ROTOR VARIATOR (REINFORCED BELT)	1	87676816	0351319
15	ROTOR VARIATOR - VARIABLE FEEDER (BSN C659)	1	86596143	0351143
15	ROTOR VARIATOR - VARIABLE FEEDER (ASN D660)	1	87583907	0251907
18	FEEDER DRIVE	1	86589482	0325416
18	FEEDER DRIVE - VARIABLE (BSN C659)	1	86729163	0724325 EE-TECH
18	FEEDER DRIVE - VARIABLE (ASN D660)	1	87583899	0324316 EE-TECH
19	TAILINGS ELEVATORS, BOTTOM AUGER AND (RIGHT HAND) (BSN C675)	2	84058339	0101087
19	TAILINGS ELEVATORS, BOTTOM AUGER AND (RIGHT HAND) (BSN F676719)	2	84455757	0300187
19	TAILINGS ELEVATORS, BOTTOM AUGER AND (RIGHT HAND) (ASN D720)	2	84196804	0100187
20	GRAIN ELEVATOR DRIVE	1	87319821	1923287 EE-TECH
21	FAN VARI-DRIVE	1	84817627	0303144
24	GRASS SEED EQUIPMENT - ACCESSORIES	1	84023277	0303117
25	HYDRAULIC FAN DRIVE	1	87636309	1401137

CR 9080

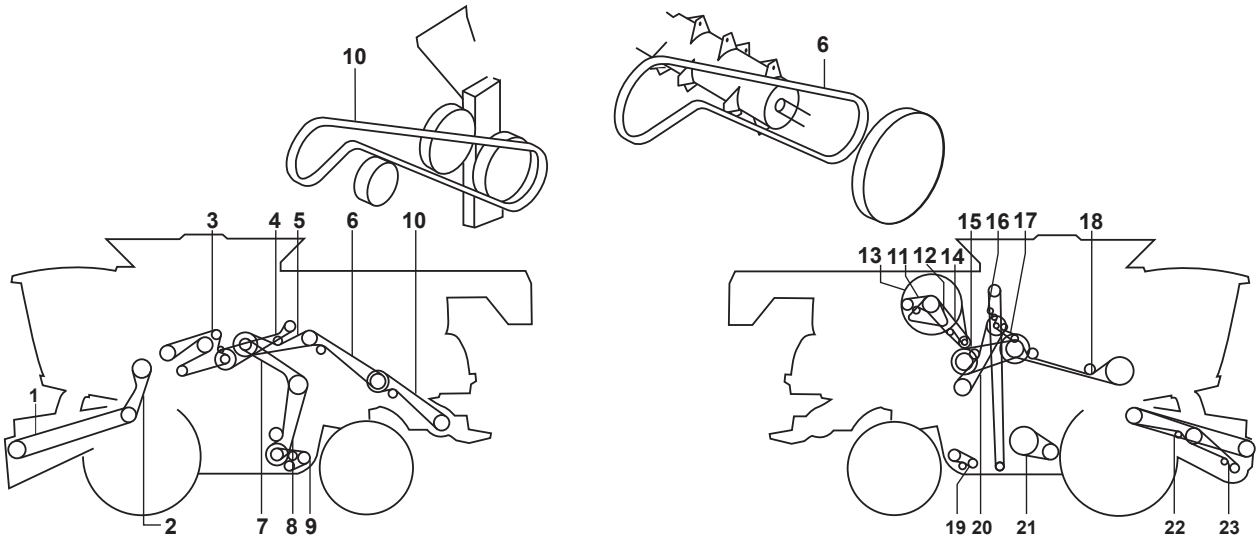

			OE	
1-2	STRAW ELEVATOR DRIVE	1	84072421	0325537
4	UNLOADING AUGER	1	87011585	0323285
5	MAIN DRIVE (BSN C575)	1	86566606	0225286 EE-TECH
5	MAIN DRIVE (ASN D576)	1	87580097	0225286 EE-TECH
6	CHOPPER DRIVE (BSN C579)	1	87031779	1423301 EE-TECH
6	CHOPPER DRIVE (ASN D580)	1	87580100	1423301 EE-TECH
7	BEATER DRIVE (BSN C579)	1	86566286	1423267
7	BEATER DRIVE (ASN D580)	1	87580099	1423267
8	BEATER DRIVE	1	86566287	0302258
9	SHAKER SHOE DRIVE - SELF-LEVELLING	2	84056913	1201153
10	CHOPPER DRIVE (BSN C723)	1	87526022	0223304
10	CHOPPER DRIVE (ASN D724)	1	84168012	0223304
11	AIR CONDITIONER UNIT : MOUNTING GROUP - WITHOUT HEATING	1	84818007	0342156
12	DRIVE, ROTARY SCREEN AND FAN	2	87284244	1472273
13	DRIVE, ROTARY SCREEN AND FAN (BSN C599)	1	84057085	0100272
13	DRIVE, ROTARY SCREEN AND FAN (ASN D600)	1	87664428	0300267
14	DRIVE, ROTARY SCREEN AND FAN	1	87556830	0173249
15	ROTOR VARIATOR	1	87053803	0351803
15	ROTOR VARIATOR (REINFORCED BELT)	1	87540195	0351195
18	FEEDER DRIVE	1	86589482	0325416
19	TAILINGS ELEVATORS, BOTTOM AUGER AND (RIGHT HAND) (BSN C675)	2	84058339	0101087
20	GRAIN ELEVATOR DRIVE	1	87319821	1923287 EE-TECH
21	FAN VARI-DRIVE	1	84817627	0303144
24	GRASS SEED EQUIPMENT - ACCESSORIES	1	84023277	0303117
25	HYDRAULIC FAN DRIVE	1	87636309	1401137

CR 9080 ELEVATION

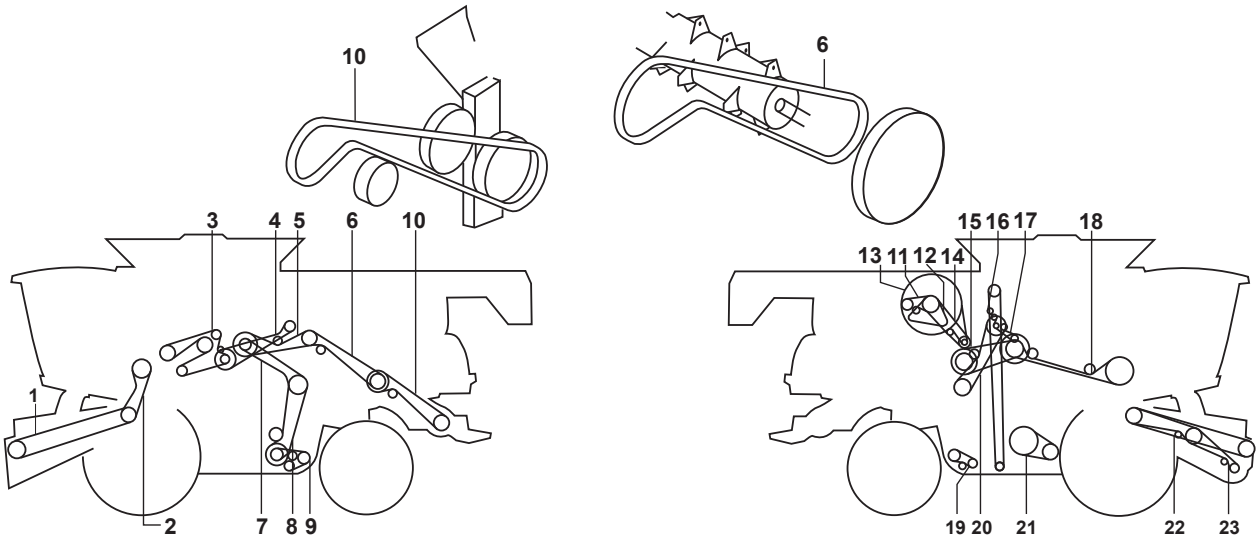

			OE	
1-2	STRAW ELEVATOR DRIVE	1	87545653	0325545
4	UNLOADING AUGER	1	87011585	0323285
5	MAIN DRIVE	1	87545651	0326289
6	CHOPPER DRIVE (BSN C579)	1	87031779	1423301 EE-TECH
6	CHOPPER DRIVE (ASN D580)	1	87580100	1423301 EE-TECH
7	BEATER DRIVE	1	87546479	1423286
8	BEATER DRIVE	1	87315599	2002253
9	SHAKER SHOE DRIVE - SELF-LEVELLING	2	87325684	0101156
10	CHOPPER DRIVE (BSN C723)	1	87526022	0223304
10	CHOPPER DRIVE (ASN D724)	1	84168012	0223304
11	AIR CONDITIONER UNIT : MOUNTING GROUP	1	84818008	0342161
12	DRIVE, ROTARY SCREEN AND FAN	2	9513136	0300256
13	DRIVE, ROTARY SCREEN AND FAN	2	87284244	1472273
14	DRIVE, ROTARY SCREEN AND FAN	2	87284244	1472273
15	ROTOR VARIATOR (BSN C659)	1	87547837	0351803
15	ROTOR VARIATOR (REINFORCED BELT) (ASN D660)	1	87540195	0351195
15	ROTOR VARIATOR - VARIABLE FEEDER (BSN C659)	1	86596143	0351143
15	ROTOR VARIATOR - VARIABLE FEEDER (ASN D660)	1	87583907	0251907
18	FEEDER DRIVE	1	87741240	0325416
18	FEEDER DRIVE - VARIABLE (BSN C659)	1	86729163	0724325 EE-TECH
18	FEEDER DRIVE - VARIABLE (ASN D660)	1	87583899	0324316 EE-TECH
19	TAILINGS ELEVATORS, BOTTOM AUGER AND (RIGHT HAND) (BSN C675)	2	84058339	0101087
19	TAILINGS ELEVATORS, BOTTOM AUGER AND (RIGHT HAND) (BSN F676719)	2	84455757	0300187
19	TAILINGS ELEVATORS, BOTTOM AUGER AND (RIGHT HAND) (ASN D720)	2	84196804	0100187
20	GRAIN ELEVATOR DRIVE	1	84137965	1923287 EE-TECH
21	FAN VARI-DRIVE	1	84817627	0303144
24	GRASS SEED EQUIPMENT - ACCESSORIES	1	84023277	0303117
25	HYDRAULIC FAN DRIVE	1	87636309	1401137

CR 9090 ELEVATION

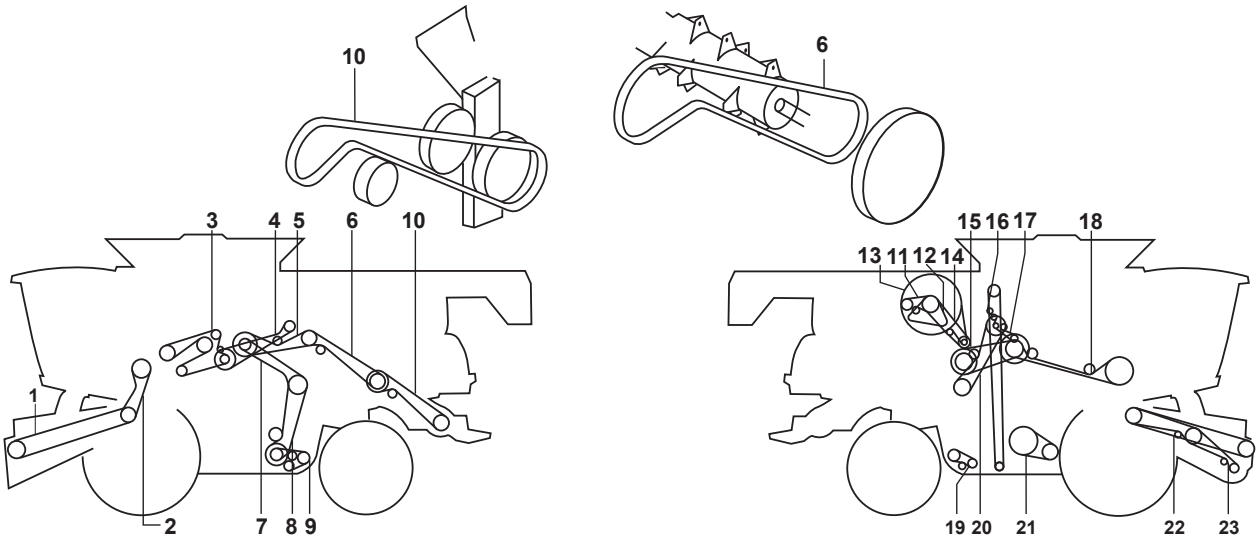

			OE	
1-2	STRAW ELEVATOR DRIVE	1	87545653	0325545
4	UNLOADING AUGER	1	87011585	0323285
5	MAIN DRIVE	1	87545651	0326289
6	CHOPPER DRIVE (BSN C579)	1	87031779	1423301 EE-TECH
6	CHOPPER DRIVE (ASN D580)	1	87580100	1423301 EE-TECH
7	BEATER DRIVE	1	87546479	1423286
8	BEATER DRIVE	1	87315599	2002253
9	SHAKER SHOE DRIVE - SELF-LEVELLING	2	87325684	0101156
10	CHOPPER DRIVE (BSN C723)	1	87526022	0223304
10	CHOPPER DRIVE (ASN D724)	1	84168012	0223304
11	AIR CONDITIONER UNIT : MOUNTING GROUP	1	84818008	0342161
12	DRIVE, ROTARY SCREEN AND FAN	2	9818704	0372255
13	DRIVE, ROTARY SCREEN AND FAN	2	87653464	0300394
14	ENGINE DRIVE BELT	1	87663279	0386289
14	ENGINE DRIVE BELT	1	87662910	0372329
15	ROTOR VARIATOR (BSN C659)	1	87547837	0351803
15	ROTOR VARIATOR (REINFORCED BELT) (ASN D660)	1	87540195	0351195
18	FEEDER DRIVE	1	87741240	0325416
19	TAILINGS ELEVATORS, BOTTOM AUGER AND (RIGHT HAND) (BSN C675)	2	84058339	0101087
19	TAILINGS ELEVATORS, BOTTOM AUGER AND (RIGHT HAND) (BSN F676719)	2	84455757	0300187
19	TAILINGS ELEVATORS, BOTTOM AUGER AND (RIGHT HAND) (ASN D720)	2	84196804	0100187
20	GRAIN ELEVATOR DRIVE	1	84137965	1923287 EE-TECH
21	FAN VARI-DRIVE	1	84817627	0303144
24	GRASS SEED EQUIPMENT - ACCESSORIES	1	84023277	0303117
25	HYDRAULIC FAN DRIVE	1	87636309	1401137

CS 520

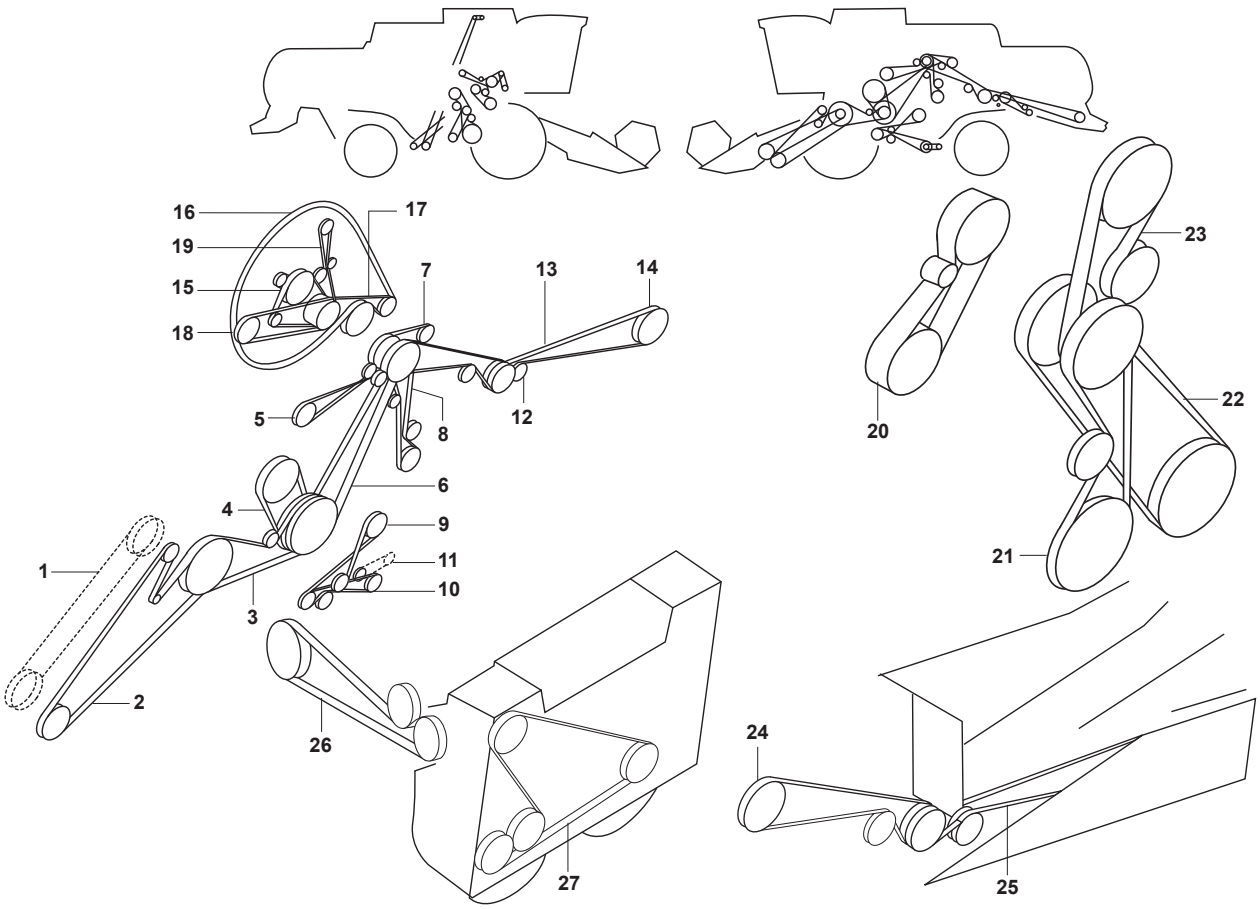

			OE	
2	STRAW ELEVATOR DRIVE, 2HB	1	84982278	0323430
2	STRAW ELEVATOR DRIVE, 3HB	1	84991234	0324509
3	HEADER DRIVE ENGAGING IDLER 2HB ONLY	1	84446792	1623311 EE-TECH
4	DRUM VARIATOR	1	84035748	0353283
5	GRAIN TANK DISCHARGE	1	84462590	0502215
6	MAIN DRIVE	1	84993120	0325376 EE-TECH
7	HYDROSTATIC PUMP DRIVE	1	80427456	0101168
8	HYDROSTATIC PUMP DRIVE	1	84607712	0324261 EE-TECH
9	STRAW WALKER DRIVE	1	84073276	2601233
10	GRAIN ELEVATOR BOTTOM AUGER	1	80422731	0302248
12	CHAFF SPREADER	1	84790244	1201153
13	CHOPPER DRIVE	1	84075955	1623354
14	CHOPPER DRIVE	1	84076421	0323453
15	DRIVE, ROTARY SCREEN AND FAN	2	84061465	1472251
16	DRIVE, ROTARY SCREEN AND FAN	1	84989965	1400235
17	INTERMEDIATE MOTOR DRIVE	1	84817626	0372245

CS 520 (CONTINUED)

			OE	
18	COMPRESSOR DRIVE	2	84061465	1472251
19	ALTERNATOR DRIVE	1	84817638	0385359
20	DRUM DRIVE	1	84072772	1825189
20	DRUM DRIVE, ROTATION SPEED SLOW	1	84072815	1225216
21	STRAW SHAKER DRIVE	1	84817635	0102176
22	FAN VARI-DRIVE	1	84073979	1510174
23	ROTARY SEPARATOR DRIVE AND SHAFT	1	84073933	2602145
24	CHOPPER DRIVE	1	84075955	1623354
25	CHOPPER DRIVE	1	84076421	0323453
26	CHAFF SPREADER	1	84790244	1201153
27	CHAFF SPREADER	1	84790355	0204251

CS 540

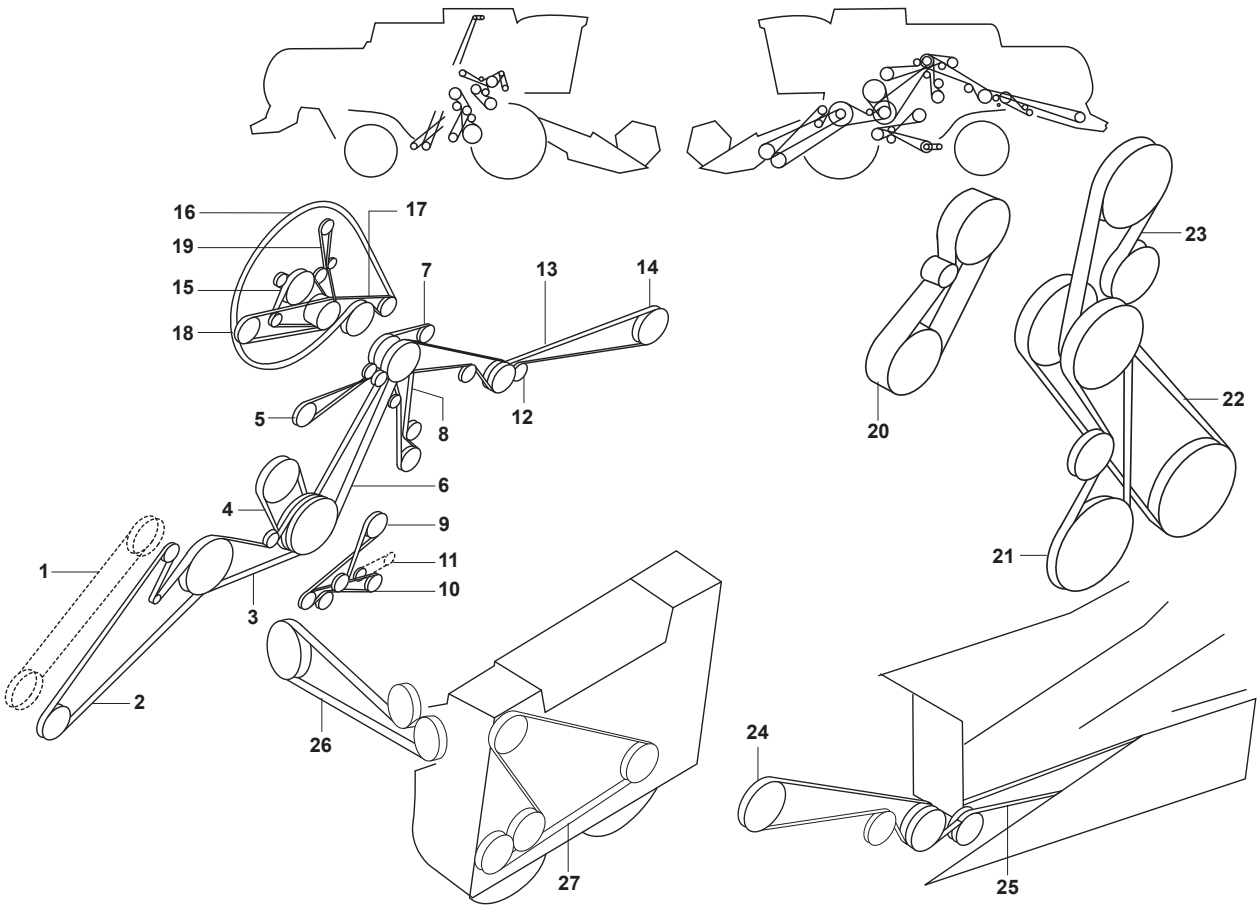

			OE	
2	STRAW ELEVATOR DRIVE, 2HB	1	84981586	0323507
2	STRAW ELEVATOR DRIVE, 3HB	1	84991234	0324509
3	HEADER DRIVE ENGAGING IDLER 2HB ONLY	1	89817374	1524314 EE-TECH
4	DRUM VARIATOR	1	84035748	0353283
5	GRAIN TANK DISCHARGE	1	84462590	0502215
6	MAIN DRIVE	1	84993120	0325376 EE-TECH
7	HYDROSTATIC PUMP DRIVE	1	80427456	0101168
8	HYDROSTATIC PUMP DRIVE	1	84607712	0324261 EE-TECH
9	STRAW WALKER DRIVE	1	84073276	2601233
10	GRAIN ELEVATOR BOTTOM AUGER	1	80422731	0302248
12	CHAFF SPREADER	1	84790244	1201153
13	CHOPPER DRIVE	1	84075955	1623354
14	CHOPPER DRIVE	1	84076421	0323453
15	DRIVE, ROTARY SCREEN AND FAN	2	84061465	1472251
16	DRIVE, ROTARY SCREEN AND FAN	1	84989965	1400235
17	INTERMEDIATE MOTOR DRIVE	1	84817626	0372245

CS 540 (CONTINUED)

			OE	
18	COMPRESSOR DRIVE	2	84061465	1472251
19	ALTERNATOR DRIVE	1	84817638	0385359
20	DRUM DRIVE	1	84072772	1825189
20	DRUM DRIVE, ROTATION SPEED SLOW	1	84072815	1225216
21	STRAW SHAKER DRIVE	1	84817635	0102176
22	FAN VARI-DRIVE	1	84073979	1510174
23	ROTARY SEPARATOR DRIVE AND SHAFT	1	84073933	2602145
24	CHOPPER DRIVE	1	84075955	1623354
25	CHOPPER DRIVE	1	84076421	0323453
26	CHAFF SPREADER	1	84790244	1201153
27	CHAFF SPREADER	1	84790355	0204251

CS 640

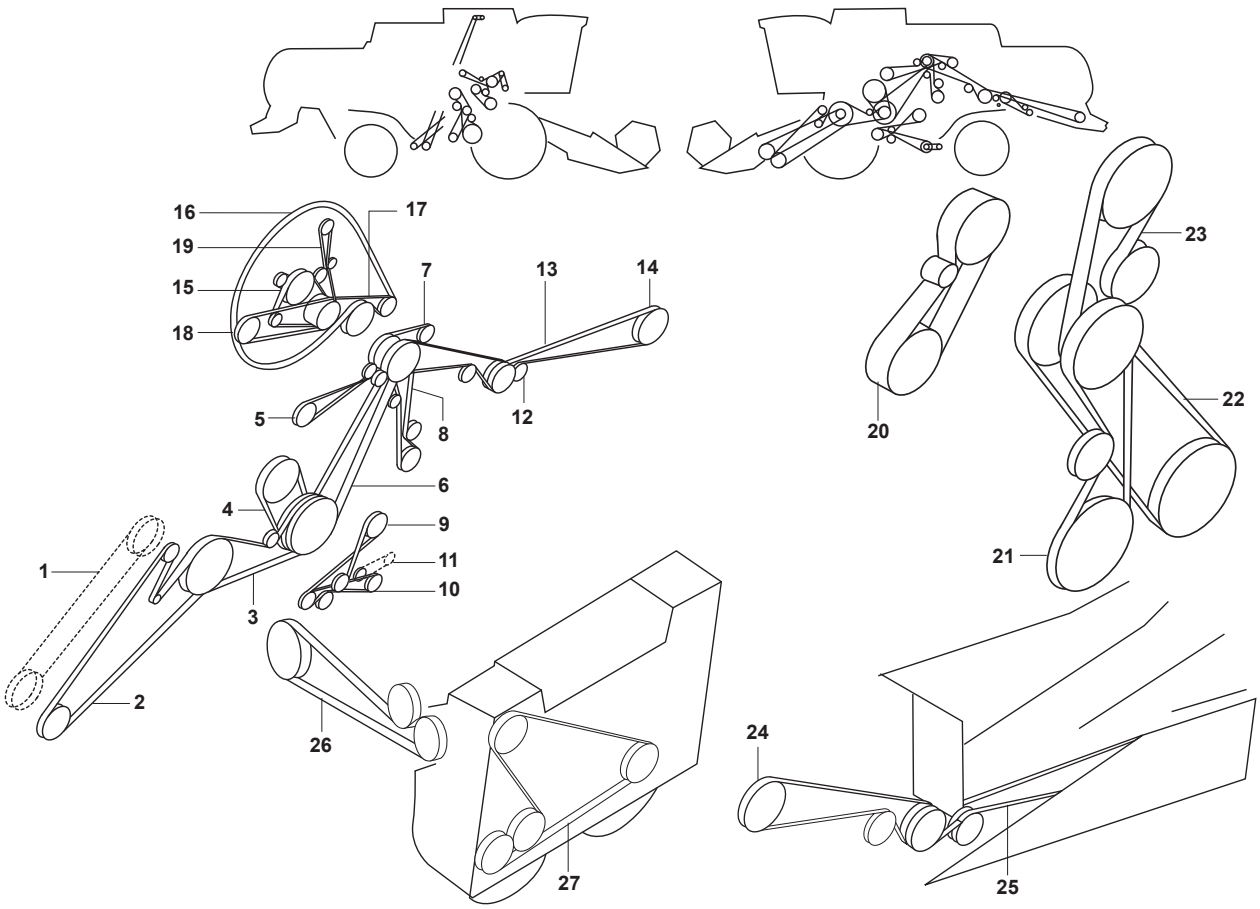

			OE	
2	STRAW ELEVATOR DRIVE, 2HB	1	84981586	0323507
2	STRAW ELEVATOR DRIVE, 3HB	1	84991234	0324509
3	HEADER DRIVE ENGAGING IDLER 2HB ONLY	1	89817374	1524314 EE-TECH
4	DRUM VARIATOR	1	84035748	0353283
5	GRAIN TANK DISCHARGE	1	84462590	0502215
6	MAIN DRIVE	1	84993120	0325376 EE-TECH
7	HYDROSTATIC PUMP DRIVE	1	80427456	0101168
8	HYDROSTATIC PUMP DRIVE	1	84607712	0324261 EE-TECH
9	STRAW WALKER DRIVE	1	84073276	2601233
10	GRAIN ELEVATOR BOTTOM AUGER	1	80422731	0302248
12	CHAFF SPREADER	1	84790244	1201153
13	CHOPPER DRIVE	1	84075955	1623354
14	CHOPPER DRIVE	1	84076421	0323453
15	DRIVE, ROTARY SCREEN AND FAN	2	84061465	1472251
16	DRIVE, ROTARY SCREEN AND FAN	1	84989965	1400235
17	INTERMEDIATE MOTOR DRIVE	1	84817626	0372245

CS 640 (CONTINUED)

			OE	
18	COMPRESSOR DRIVE	2	84061465	1472251
19	ALTERNATOR DRIVE	1	84817638	0385359
20	DRUM DRIVE	1	84072772	1825189
20	DRUM DRIVE, ROTATION SPEED SLOW	1	84072815	1225216
21	STRAW SHAKER DRIVE	1	84817635	0102176
22	FAN VARI-DRIVE	1	84073979	1510174
23	ROTARY SEPARATOR DRIVE AND SHAFT	1	84073933	2602145
24	CHOPPER DRIVE	1	84075955	1623354
25	CHOPPER DRIVE	1	84076421	0323453
26	CHAFF SPREADER	1	84790244	1201153
27	CHAFF SPREADER	1	84790356	0104278

CS 660

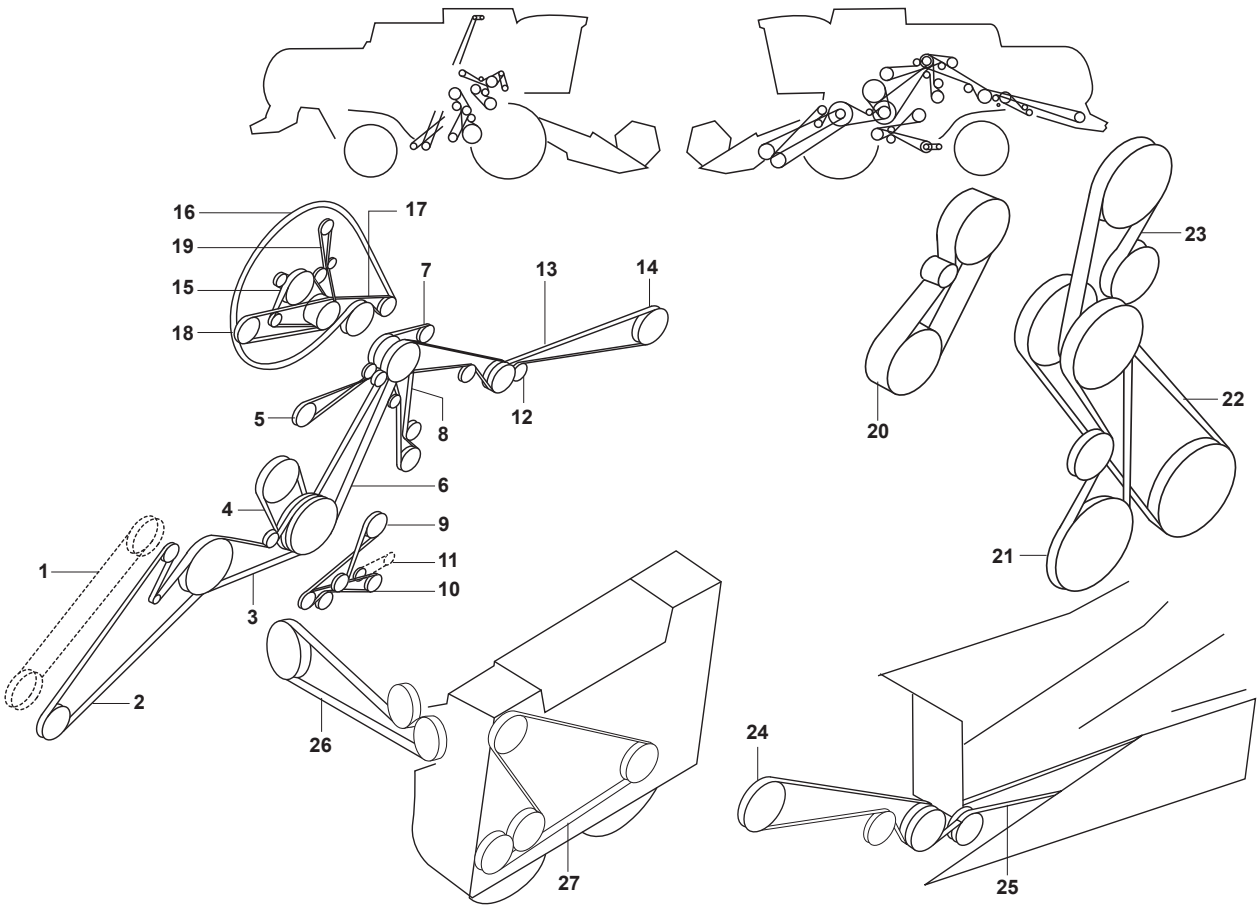

			OE	
2	STRAW ELEVATOR DRIVE, 2HB	1	84981586	0323507
2	STRAW ELEVATOR DRIVE, 3HB	1	84991234	0324509
3	HEADER DRIVE ENGAGING IDLER 2HB ONLY	1	89817374	1524314 EE-TECH
4	DRUM VARIATOR	1	84035748	0353283
5	GRAIN TANK DISCHARGE	1	84462590	0502215
6	MAIN DRIVE	1	84993120	0325376 EE-TECH
7	HYDROSTATIC PUMP DRIVE	1	80427456	0101168
8	HYDROSTATIC PUMP DRIVE	1	84607713	0324271 EE-TECH
9	STRAW WALKER DRIVE	1	84073276	2601233
10	GRAIN ELEVATOR BOTTOM AUGER	1	80422731	0302248
12	CHAFF SPREADER	1	84790244	1201153
13	CHOPPER DRIVE	1	84075955	1623354
14	CHOPPER DRIVE	1	84076421	0323453
15	DRIVE, ROTARY SCREEN AND FAN	2	84061465	1472251
16	DRIVE, ROTARY SCREEN AND FAN	1	84989965	1400235
17	INTERMEDIATE MOTOR DRIVE	1	84817626	0372245

CS 660 (CONTINUED)

			OE	
18	COMPRESSOR DRIVE	2	84061465	1472251
19	ALTERNATOR DRIVE	1	84817638	0385359
20	DRUM DRIVE	1	84072772	1825189
20	DRUM DRIVE, ROTATION SPEED SLOW	1	84072815	1225216
21	STRAW SHAKER DRIVE	1	84817635	0102176
22	FAN VARI-DRIVE	1	84073979	1510174
23	ROTARY SEPARATOR DRIVE AND SHAFT	1	84073933	2602145
24	CHOPPER DRIVE	1	84075955	1623354
25	CHOPPER DRIVE	1	84076421	0323453
26	CHAFF SPREADER	1	84790244	1201153
27	CHAFF SPREADER	1	84790356	0104278

CS 6050

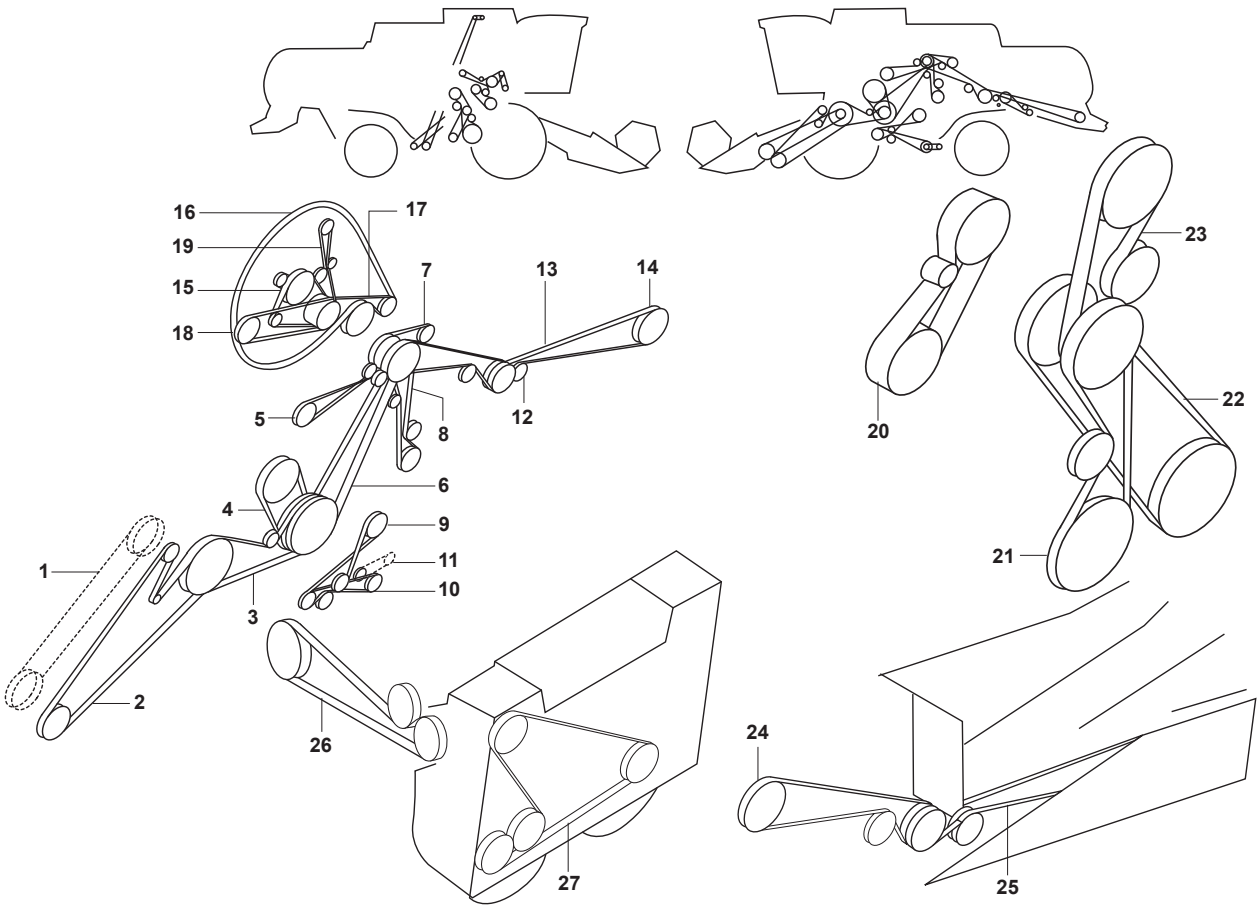

			OE	
2	STRAW ELEVATOR DRIVE, 2HB	1	84981586	0323507
2	STRAW ELEVATOR DRIVE, 3HB	1	84991234	0324509
3	HEADER DRIVE ENGAGING IDLER 2HB ONLY	1	84446792	1623311 EE-TECH
3	HEADER DRIVE ENGAGING IDLER 3HB ONLY	1	89817374	1524314 EE-TECH
4	DRUM VARIATOR	1	84035748	0353283
5	GRAIN TANK DISCHARGE	1	84462590	0502215
6	MAIN DRIVE	1	84993120	0325376 EE-TECH
7	HYDROSTATIC PUMP DRIVE	1	80427456	0101168
8	HYDROSTATIC PUMP DRIVE	1	84607712	0324261 EE-TECH
9	STRAW WALKER DRIVE	1	87521887	1401234
10	GRAIN ELEVATOR BOTTOM AUGER	1	80422731	0302248
12	CHAFF SPREADER	1	84790244	1201153
13	CHOPPER DRIVE	1	84075955	1623354
14	CHOPPER DRIVE	1	84076421	0323453
15	DRIVE, ROTARY SCREEN AND FAN	2	84061465	1472251
16	DRIVE, ROTARY SCREEN AND FAN	1	84989965	1400235

CS 6050 (CONTINUED)

			OE	
17	ALTERNATOR DRIVE	1	747177	0272247
20	DRUM DRIVE	1	84072772	1825189
20	DRUM DRIVE, ROTATION SPEED SLOW	1	84072815	1225216
21	STRAW SHAKER DRIVE	1	84817635	0102176
22	FAN VARI-DRIVE	1	84073979	1510174
23	ROTARY SEPARATOR DRIVE AND SHAFT	1	84073933	2602145
24	CHOPPER DRIVE	1	84075955	1623354
25	CHOPPER DRIVE	1	84076421	0323453
26	CHAFF SPREADER	1	84790244	1201153
27	CHAFF SPREADER	1	84790355	0204251

CS 6060

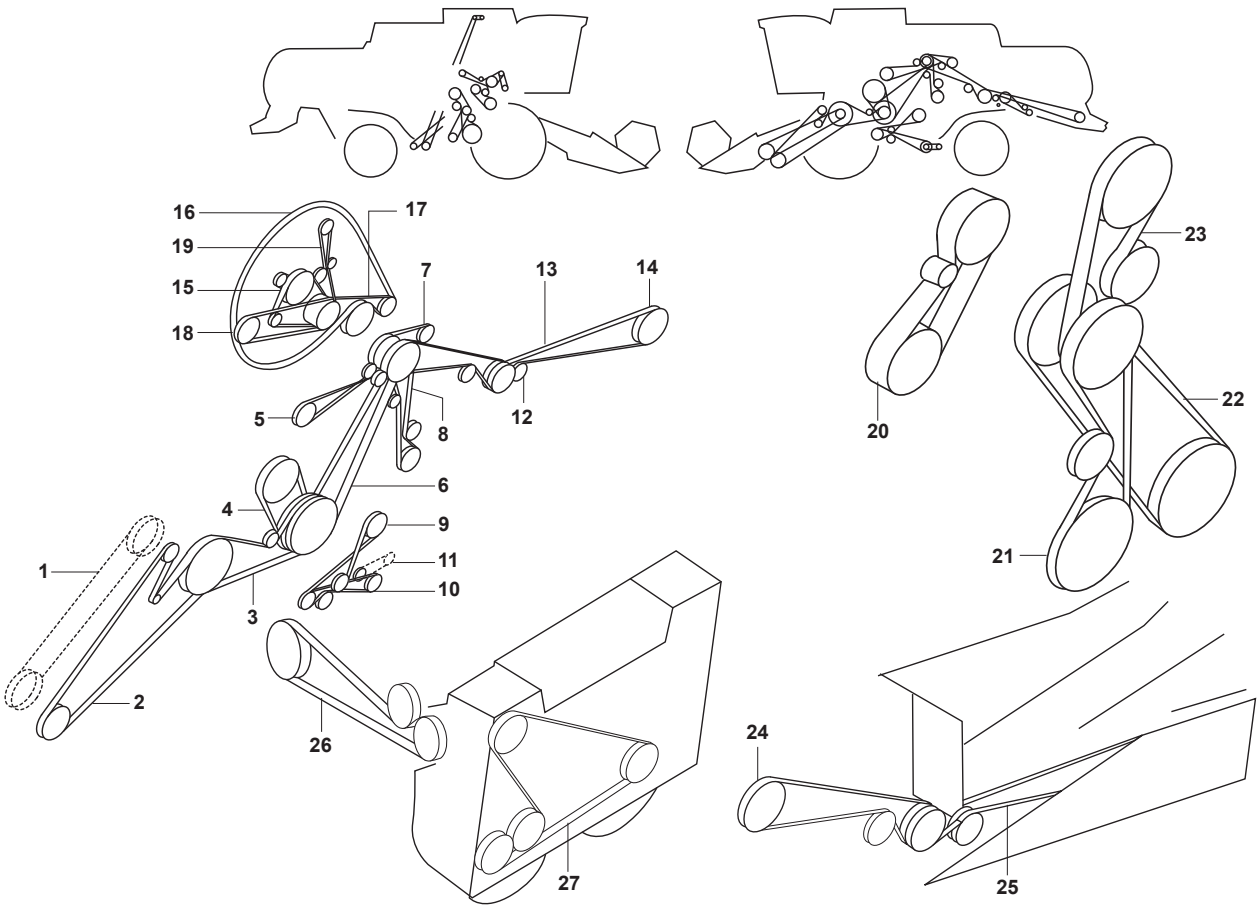

			OE	
2	STRAW ELEVATOR DRIVE, 2HB	1	84981586	0323507
2	STRAW ELEVATOR DRIVE, 3HB	1	84991234	0324509
3	HEADER DRIVE ENGAGING IDLER 2HB ONLY	1	84446792	1623311 EE-TECH
3	HEADER DRIVE ENGAGING IDLER 3HB ONLY	1	89817374	1524314 EE-TECH
4	DRUM VARIATOR	1	84035748	0353283
5	GRAIN TANK DISCHARGE	1	84462590	0502215
6	MAIN DRIVE	1	84993120	0325376 EE-TECH
7	HYDROSTATIC PUMP DRIVE	1	80427456	0101168
9	STRAW WALKER DRIVE	1	87521887	1401234
10	GRAIN ELEVATOR BOTTOM AUGER	1	80422731	0302248
12	CHAFF SPREADER	1	84790244	1201153
13	CHOPPER DRIVE	1	84075955	1623354
14	CHOPPER DRIVE	1	84076421	0323453
15	DRIVE, ROTARY SCREEN AND FAN	2	84061465	1472251
16	DRIVE, ROTARY SCREEN AND FAN	1	84989965	1400235
17	ALTERNATOR DRIVE	1	747177	0272247

CS 6060 (CONTINUED)

			OE	
19	HYDROSTATIC PUMP DRIVE	1	87721960	0324261 EE-TECH
20	DRUM DRIVE	1	84072772	1825189
20	DRUM DRIVE, ROTATION SPEED SLOW	1	84072815	1225216
21	STRAW SHAKER DRIVE	1	84817635	0102176
22	FAN VARI-DRIVE	1	84073979	1510174
23	ROTARY SEPARATOR DRIVE AND SHAFT	1	84073933	2602145
24	CHOPPER DRIVE	1	84075955	1623354
25	CHOPPER DRIVE	1	84076421	0323453
26	CHAFF SPREADER	1	84790244	1201153
27	CHAFF SPREADER	1	84790355	0204251

CS 6060 - HILLSIDE

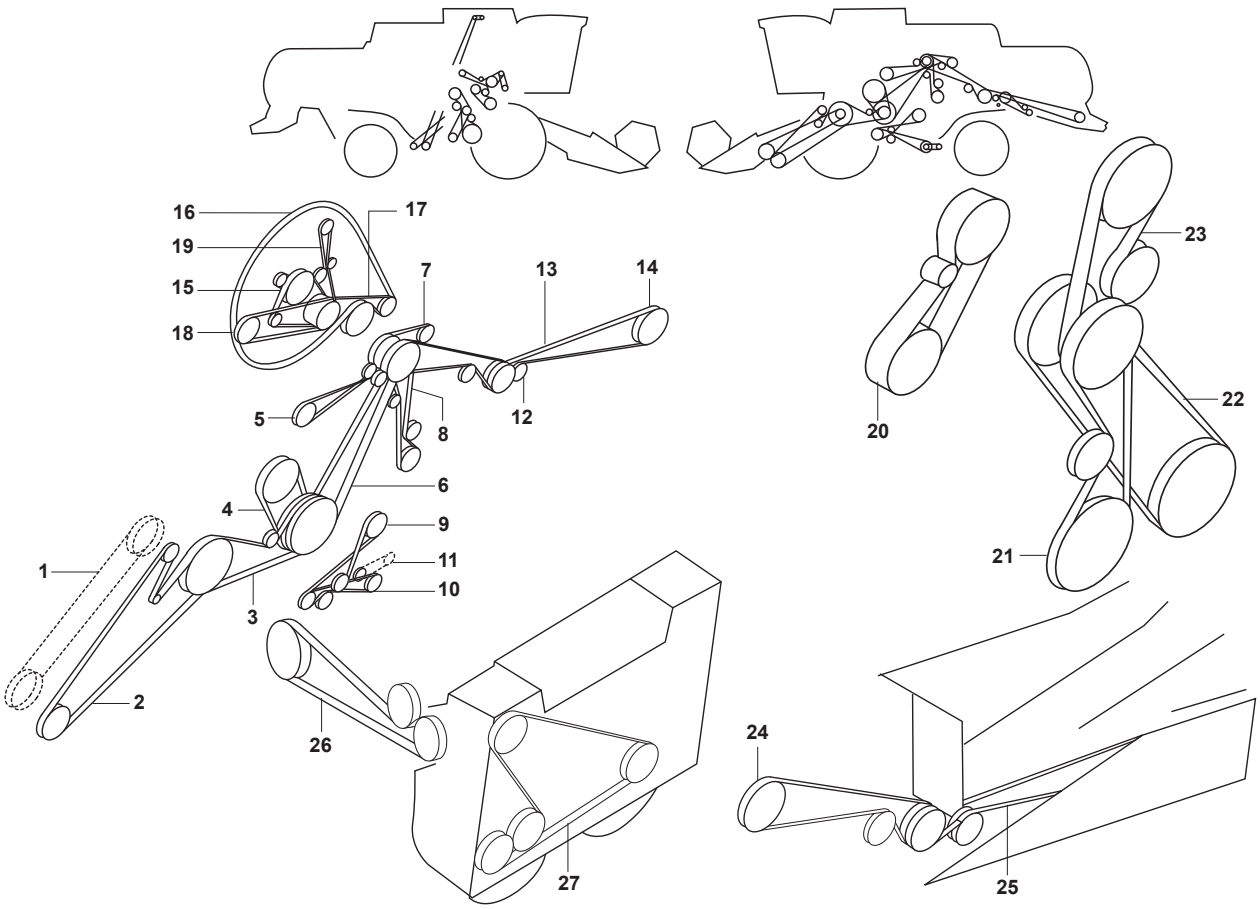

			OE	
2	STRAW ELEVATOR DRIVE, 2HB	1	84981586	0323507
2	STRAW ELEVATOR DRIVE, 3HB	1	84991234	0324509
3	HEADER DRIVE ENGAGING IDLER 2HB ONLY	1	84446792	1623311 EE-TECH
3	HEADER DRIVE ENGAGING IDLER 3HB ONLY	1	89817374	1524314 EE-TECH
4	DRUM VARIATOR	1	84035748	0353283
5	GRAIN TANK DISCHARGE	1	84462590	0502215
6	MAIN DRIVE	1	84993120	0325376 EE-TECH
6	KIT FOR LONG CONVEYOR	1	84971217	0327386
7	HYDROSTATIC PUMP DRIVE	1	80427456	0101168
9	STRAW WALKER DRIVE	1	87521887	1401234
10	GRAIN ELEVATOR BOTTOM AUGER	1	80422731	0302248
12	CHAFF SPREADER	1	84790244	1201153
13	CHOPPER DRIVE	1	84075955	1623354
14	CHOPPER DRIVE	1	84076421	0323453
15	DRIVE, ROTARY SCREEN AND FAN	2	84061465	1472251
16	DRIVE, ROTARY SCREEN AND FAN	1	84989965	1400235

CS 6060 - HILLSIDE (CONTINUED)

			OE	
17	ALTERNATOR DRIVE	1	747177	0272247
19	HYDROSTATIC PUMP DRIVE	1	84607713	0324271 EE-TECH
20	DRUM DRIVE	1	84072772	1825189
20	DRUM DRIVE, ROTATION SPEED SLOW	1	84072815	1225216
21	STRAW SHAKER DRIVE	1	84817635	0102176
22	FAN VARI-DRIVE	1	84073979	1510174
23	ROTARY SEPARATOR DRIVE AND SHAFT	1	84073933	2602145
24	CHOPPER DRIVE	1	84075955	1623354
25	CHOPPER DRIVE	1	84076421	0323453
26	CHAFF SPREADER	1	84790244	1201153
27	CHAFF SPREADER	1	84790355	0204251

CS 6070

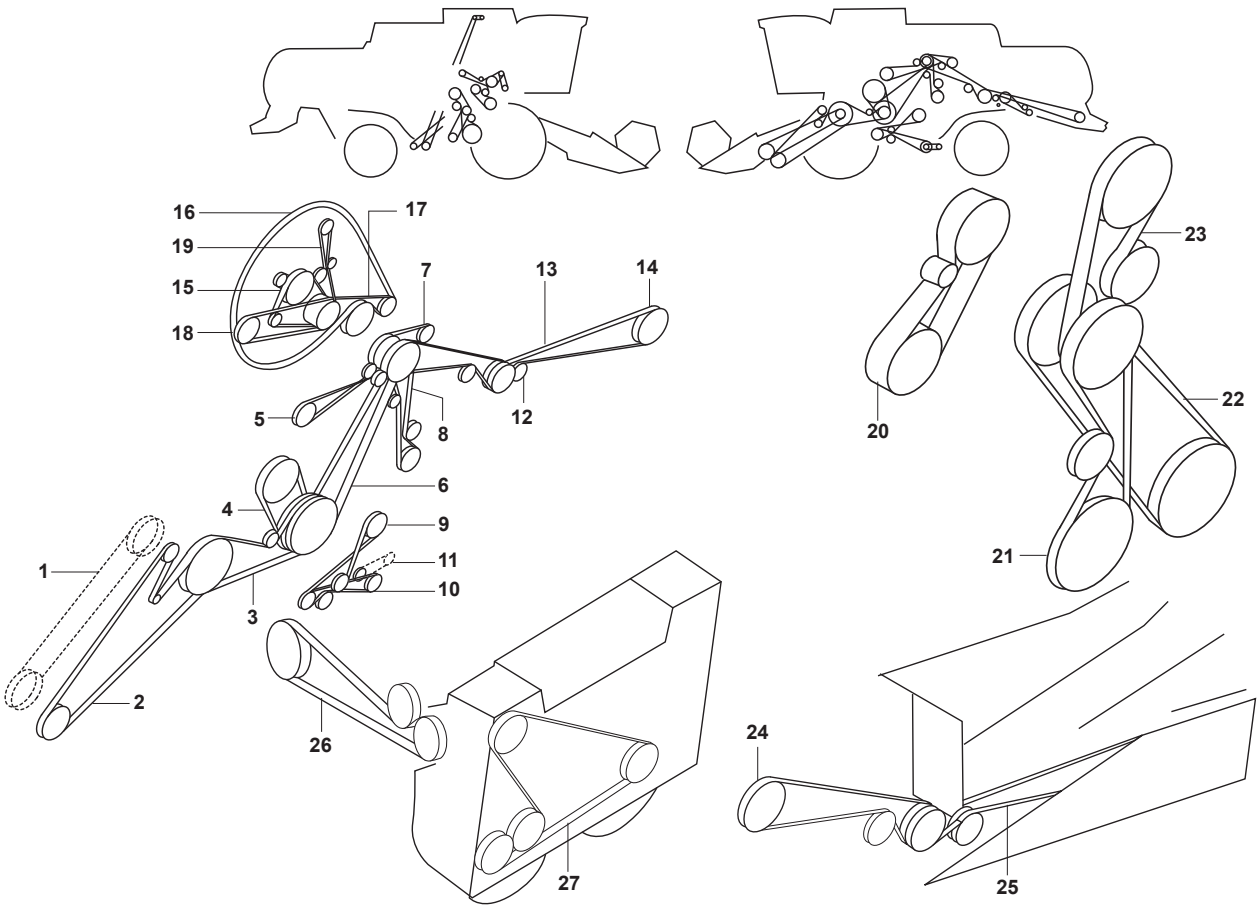

			OE	
2	STRAW ELEVATOR DRIVE, 2HB	1	84981586	0323507
2	STRAW ELEVATOR DRIVE, 3HB	1	84991234	0324509
3	HEADER DRIVE ENGAGING IDLER 2HB ONLY	1	84446792	1623311 EE-TECH
3	HEADER DRIVE ENGAGING IDLER 3HB ONLY	1	89817374	1524314 EE-TECH
4	DRUM VARIATOR	1	84035748	0353283
5	GRAIN TANK DISCHARGE	1	84462590	0502215
6	MAIN DRIVE	1	84993120	0325376 EE-TECH
7	HYDROSTATIC PUMP DRIVE	1	80427456	0101168
8	HYDROSTATIC PUMP DRIVE	1	84607712	0324261 EE-TECH
9	STRAW WALKER DRIVE	1	87521887	1401234
10	GRAIN ELEVATOR BOTTOM AUGER	1	80422731	0302248
12	CHAFF SPREADER	1	84790244	1201153
13	CHOPPER DRIVE	1	84075955	1623354
14	CHOPPER DRIVE	1	84076421	0323453
15	DRIVE, ROTARY SCREEN AND FAN	2	84061465	1472251
16	DRIVE, ROTARY SCREEN AND FAN	1	84989965	1400235

CS 6070 (CONTINUED)

			OE	
17	ALTERNATOR DRIVE	1	747177	0272247
20	DRUM DRIVE	1	84072772	1825189
20	DRUM DRIVE, ROTATION SPEED SLOW	1	84072815	1225216
21	STRAW SHAKER DRIVE	1	84817635	0102176
22	FAN VARI-DRIVE	1	84073979	1510174
23	ROTARY SEPARATOR DRIVE AND SHAFT	1	84073933	2602145
24	CHOPPER DRIVE	1	84075955	1623354
25	CHOPPER DRIVE	1	84076421	0323453
26	CHAFF SPREADER	1	84790244	1201153
27	CHAFF SPREADER	1	84790356	0104278

CS 6080

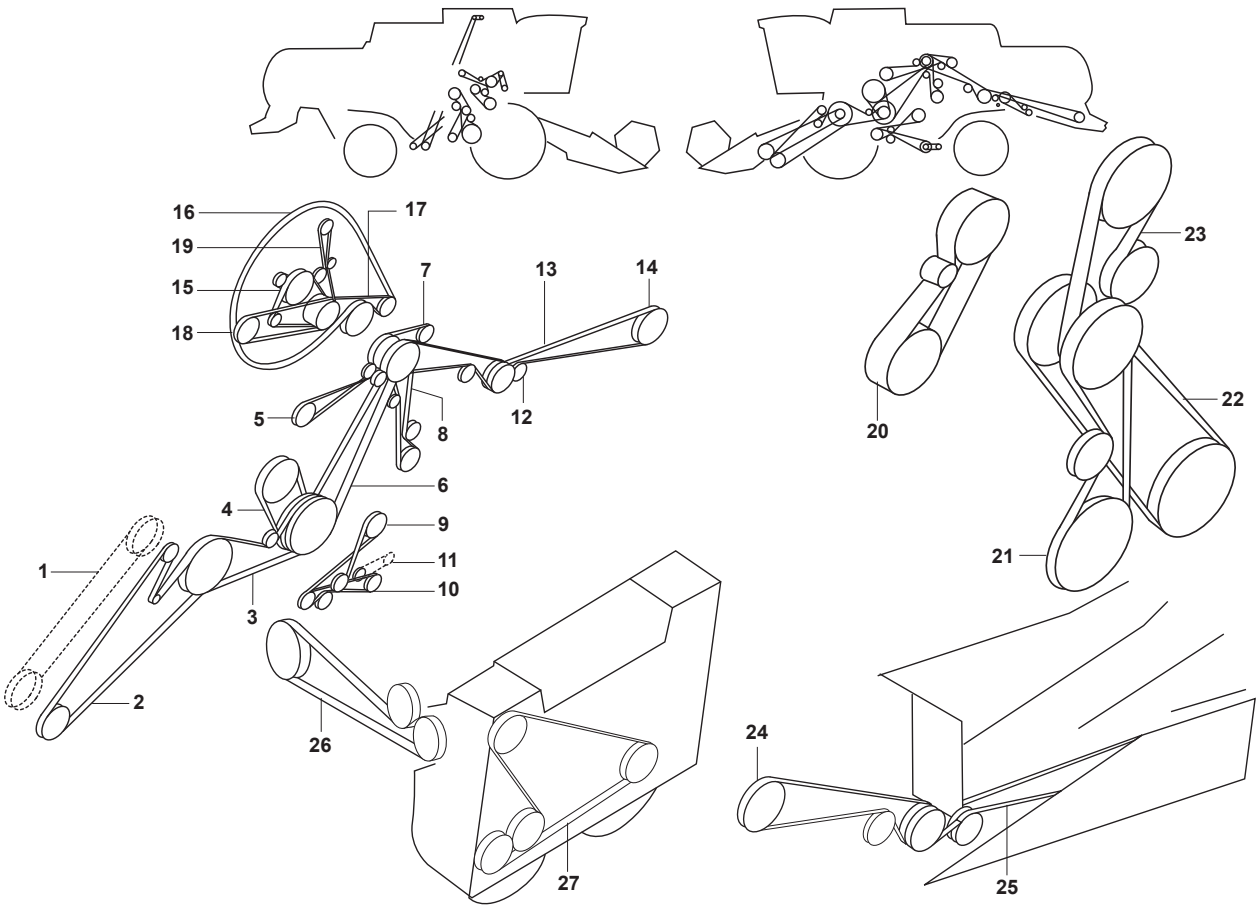

			OE	
2	STRAW ELEVATOR DRIVE, 2HB	1	84981586	0323507
2	STRAW ELEVATOR DRIVE, 3HB	1	84991234	0324509
3	HEADER DRIVE ENGAGING IDLER 2HB ONLY	1	84446792	1623311 EE-TECH
3	HEADER DRIVE ENGAGING IDLER 3HB ONLY	1	89817374	1524314 EE-TECH
4	DRUM VARIATOR	1	84035748	0353283
5	GRAIN TANK DISCHARGE	1	84462590	0502215
6	MAIN DRIVE	1	84993120	0325376 EE-TECH
7	HYDROSTATIC PUMP DRIVE	1	80427456	0101168
8	HYDROSTATIC PUMP DRIVE	1	84607712	0324261 EE-TECH
9	STRAW WALKER DRIVE	1	87521887	1401234
10	GRAIN ELEVATOR BOTTOM AUGER	1	80422731	0302248
12	CHAFF SPREADER	1	84790244	1201153
13	CHOPPER DRIVE	1	84075955	1623354
14	CHOPPER DRIVE	1	84076421	0323453
15	DRIVE, ROTARY SCREEN AND FAN	2	84061463	1472251
16	DRIVE, ROTARY SCREEN AND FAN	1	87374615	1400264

CS 6080 (CONTINUED)

			OE	
17	ALTERNATOR DRIVE	1	84817626	0372245
20	DRUM DRIVE	1	84072772	1825189
20	DRUM DRIVE, ROTATION SPEED SLOW	1	84072815	1225216
21	STRAW SHAKER DRIVE	1	84817635	0102176
22	FAN VARI-DRIVE	1	84073979	1510174
23	ROTARY SEPARATOR DRIVE AND SHAFT	1	84073933	2602145
24	CHOPPER DRIVE	1	84075955	1623354
25	CHOPPER DRIVE	1	84076421	0323453
26	CHAFF SPREADER	1	84790244	1201153
27	CHAFF SPREADER	1	84790356	0104278

CS 6090

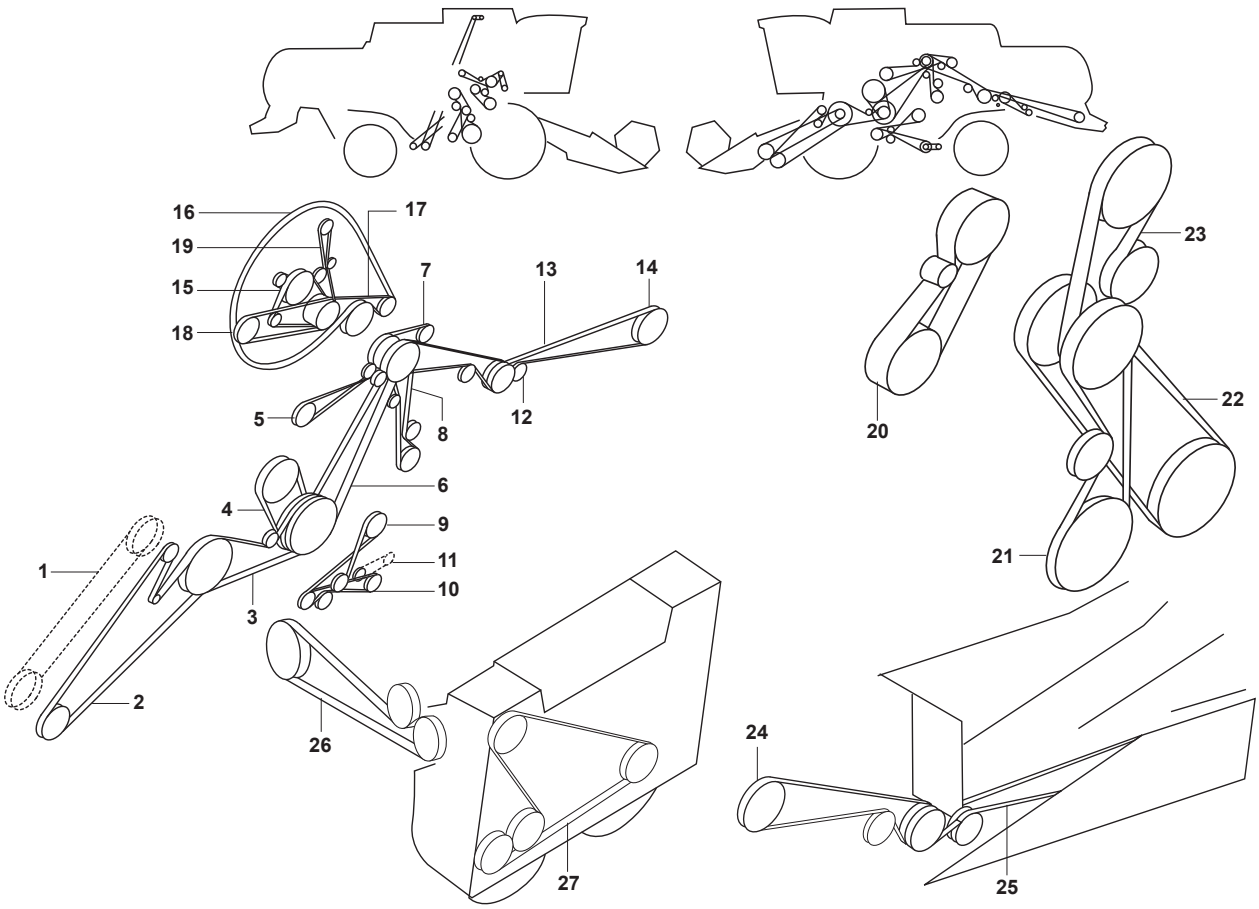

			OE	
2	STRAW ELEVATOR DRIVE, 2HB	1	84981586	0323507
2	STRAW ELEVATOR DRIVE, 3HB	1	84991234	0324509
3	HEADER DRIVE ENGAGING IDLER 2HB ONLY	1	84446792	1623311 EE-TECH
3	HEADER DRIVE ENGAGING IDLER 3HB ONLY	1	89817374	1524314 EE-TECH
4	DRUM VARIATOR	1	84035748	0353283
5	GRAIN TANK DISCHARGE	1	84462590	0502215
6	MAIN DRIVE	1	84993120	0325376 EE-TECH
7	HYDROSTATIC PUMP DRIVE	1	80427456	0101168
8	HYDROSTATIC PUMP DRIVE	1	84607713	0324271 EE-TECH
9	STRAW WALKER DRIVE	1	87521887	1401234
10	GRAIN ELEVATOR BOTTOM AUGER	1	80422731	0302248
12	CHAFF SPREADER	1	84790244	1201153
13	CHOPPER DRIVE	1	84075955	1623354
14	CHOPPER DRIVE	1	84076421	0323453
15	DRIVE, ROTARY SCREEN AND FAN	2	84061463	1472251
16	DRIVE, ROTARY SCREEN AND FAN	1	87374615	1400264

CS 6090 (CONTINUED)

			OE	
17	ALTERNATOR DRIVE	1	84817626	0372245
20	DRUM DRIVE	1	84072772	1825189
20	DRUM DRIVE, ROTATION SPEED SLOW	1	84072815	1225216
21	STRAW SHAKER DRIVE	1	84817635	0102176
22	FAN VARI-DRIVE	1	84073979	1510174
23	ROTARY SEPARATOR DRIVE AND SHAFT	1	84073933	2602145
24	CHOPPER DRIVE	1	84075955	1623354
25	CHOPPER DRIVE	1	84076421	0323453
26	CHAFF SPREADER	1	84790244	1201153
27	CHAFF SPREADER	1	84790356	0104278

CSX 7040

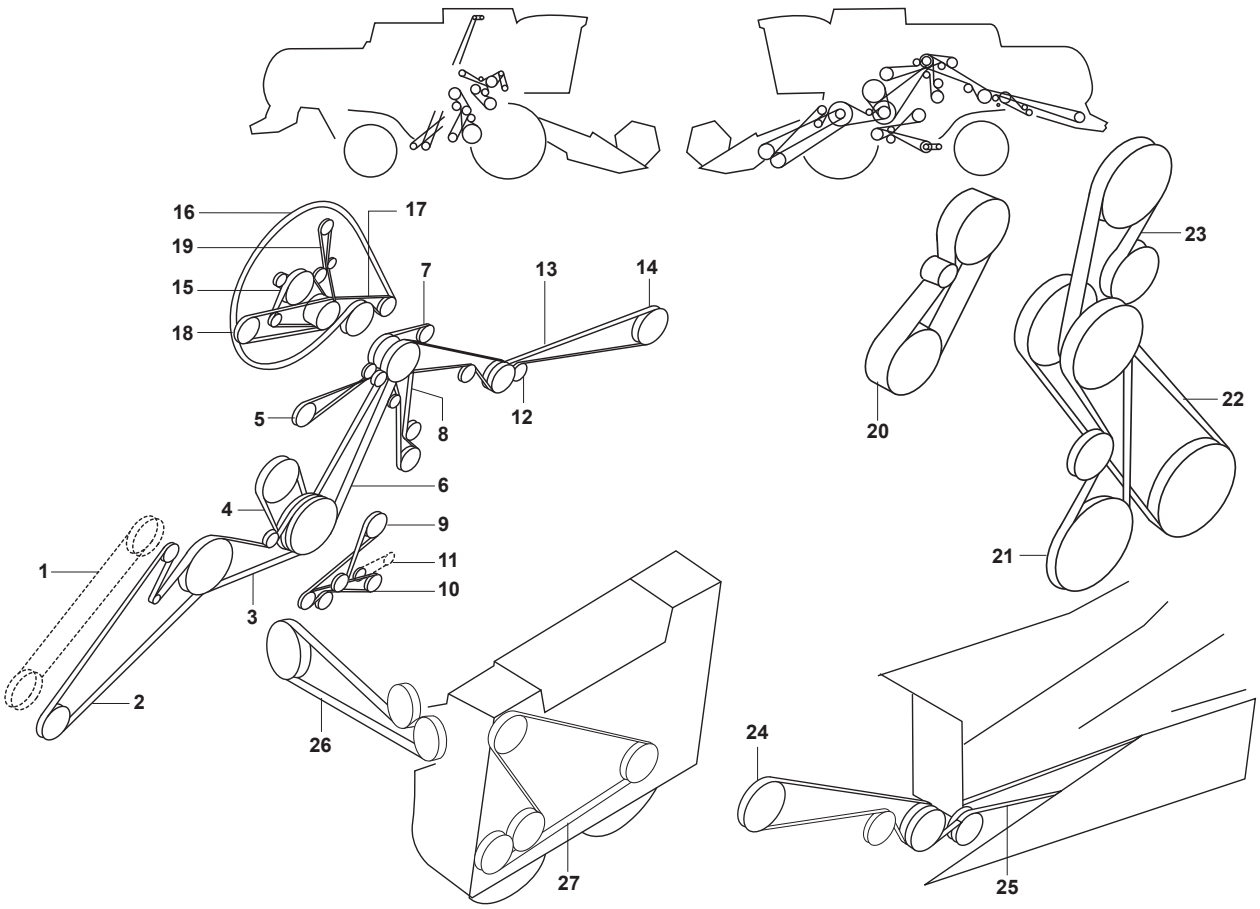

			OE	
2	STRAW ELEVATOR DRIVE, 2HB	1	84981586	0323507
2	STRAW ELEVATOR DRIVE, 3HB	1	84991234	0324509
3	HEADER DRIVE ENGAGING IDLER 2HB ONLY	1	84446792	1623311 EE-TECH
3	HEADER DRIVE ENGAGING IDLER 3HB ONLY	1	89817374	1524314 EE-TECH
4	DRUM VARIATOR	1	84035748	0353283
5	GRAIN TANK DISCHARGE	1	84462590	0502215
5	ROTARY SCREEN DRIVE AND FAN	1	747177	0272247
6	MAIN DRIVE	1	84993120	0325376 EE-TECH
7	HYDROSTATIC PUMP DRIVE	1	80427456	0101168
8	HYDROSTATIC PUMP DRIVE	1	84607712	0324261 EE-TECH
9	STRAW WALKER DRIVE	1	87521887	1401234
9	GRASS SEED EQUIPMENT	1	84452153	1510140
10	GRAIN ELEVATOR BOTTOM AUGER	1	80422731	0302248
12	CHAFF SPREADER	1	84790244	1201153
13	CHOPPER DRIVE	1	84075955	1623354
14	CHOPPER DRIVE	1	84076421	0323453

CSX 7040 (CONTINUED)

			OE	
15	DRIVE, ROTARY SCREEN AND FAN	2	84061463	1472251
16	DRIVE, ROTARY SCREEN AND FAN	1	87374615	1400264
17	ALTERNATOR DRIVE	1	84817626	0372245
20	DRUM DRIVE	1	84072772	1825189
20	DRUM DRIVE, ROTATION SPEED SLOW	1	84072815	1225216
21	STRAW SHAKER DRIVE	1	84817635	0102176
22	FAN VARI-DRIVE	1	84073979	1510174
23	ROTARY SEPARATOR DRIVE AND SHAFT	1	84073933	2602145
24	CHOPPER DRIVE	1	84075955	1623354
25	CHOPPER DRIVE	1	84076421	0323453
26	CHAFF SPREADER	1	84790244	1201153
26	ROTARY SCREEN DRIVE AND FAN	1	84989965	1400235
27	CHAFF SPREADER	1	84790244	1201153
36	GRASS SEED EQUIPMENT	1	84452112	0301131
36	ROTARY SCREEN DRIVE AND FAN	2	84061465	1472251

CSX 7050

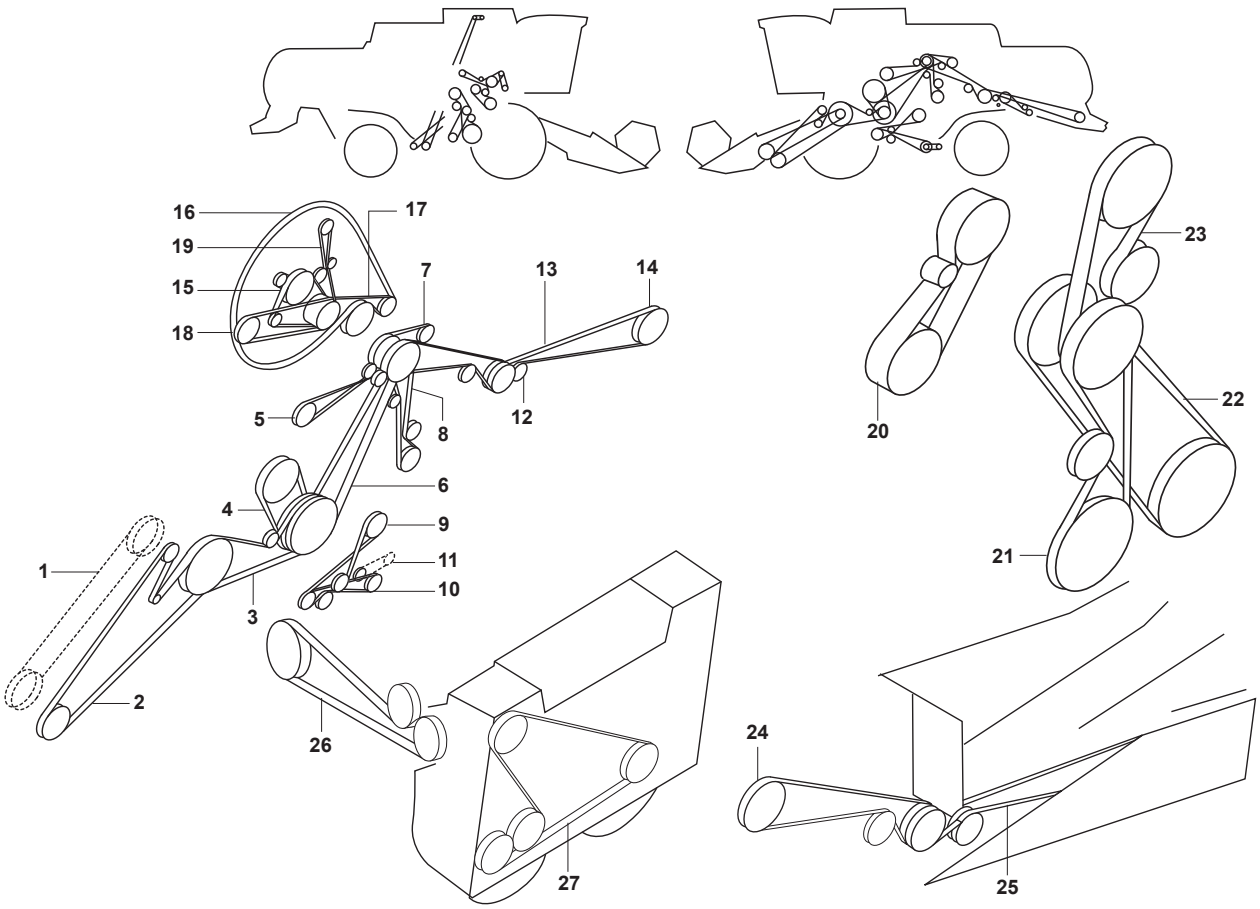

			OE	
2	STRAW ELEVATOR DRIVE, 2HB	1	84981586	0323507
2	STRAW ELEVATOR DRIVE, 3HB	1	84991234	0324509
3	HEADER DRIVE ENGAGING IDLER 2HB ONLY	1	84446792	1623311 EE-TECH
3	HEADER DRIVE ENGAGING IDLER 3HB ONLY	1	89817374	1524314 EE-TECH
4	DRUM VARIATOR	1	84035748	0353283
5	GRAIN TANK DISCHARGE	1	84462590	0502215
5	ROTARY SCREEN DRIVE AND FAN	1	747177	0272247
6	MAIN DRIVE	1	84993120	0325376 EE-TECH
7	HYDROSTATIC PUMP DRIVE	1	80427456	0101168
8	HYDROSTATIC PUMP DRIVE	1	84607713	0324271 EE-TECH
9	STRAW WALKER DRIVE	1	87521887	1401234
9	GRASS SEED EQUIPMENT	1	84452153	1510140
10	GRAIN ELEVATOR BOTTOM AUGER	1	80422731	0302248
12	CHAFF SPREADER	1	84790244	1201153
13	CHOPPER DRIVE	1	84075955	1623354
14	CHOPPER DRIVE	1	84076421	0323453

CSX 7050 (CONTINUED)

			OE	
15	DRIVE, ROTARY SCREEN AND FAN	2	84061463	1472251
16	DRIVE, ROTARY SCREEN AND FAN	1	87374615	1400264
17	ALTERNATOR DRIVE	1	84817626	0372245
20	DRUM DRIVE	1	84072772	1825189
20	DRUM DRIVE, ROTATION SPEED SLOW	1	84072815	1225216
21	STRAW SHAKER DRIVE	1	84817635	0102176
22	FAN VARI-DRIVE	1	84073979	1510174
23	ROTARY SEPARATOR DRIVE AND SHAFT	1	84073933	2602145
24	CHOPPER DRIVE	1	84075955	1623354
25	CHOPPER DRIVE	1	84076421	0323453
26	CHAFF SPREADER	1	84790244	1201153
26	ROTARY SCREEN DRIVE AND FAN	1	84989965	1400235
27	CHAFF SPREADER	1	84790244	1201153
36	GRASS SEED EQUIPMENT	1	84452112	0301131
36	ROTARY SCREEN DRIVE AND FAN	2	84061465	1472251

CSX 7050 - HILLSIDE

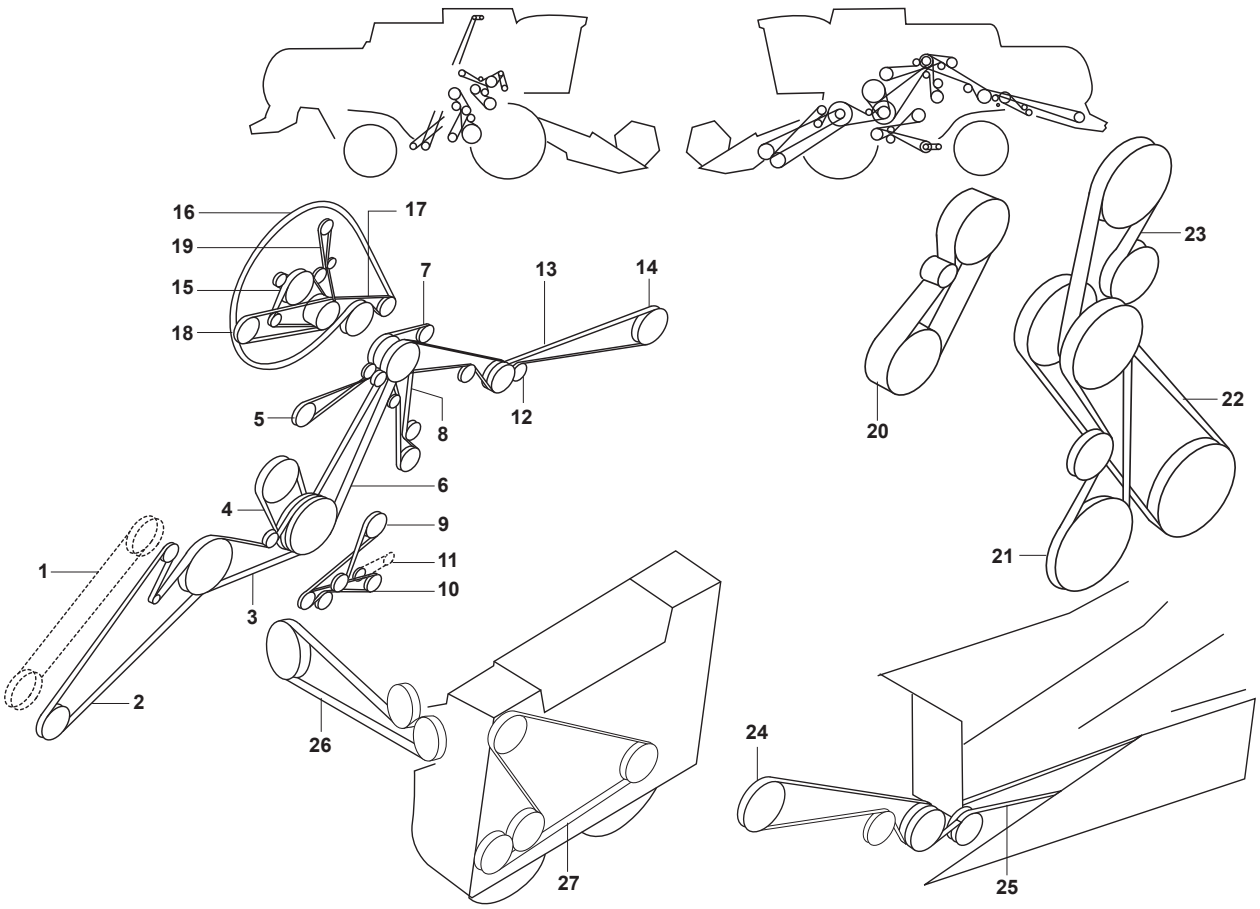

			OE	
2	STRAW ELEVATOR DRIVE, 2HB	1	84981586	0323507
2	STRAW ELEVATOR DRIVE, 3HB	1	84991234	0324509
3	HEADER DRIVE ENGAGING IDLER 2HB ONLY	1	84446792	1623311 EE-TECH
3	HEADER DRIVE ENGAGING IDLER 3HB ONLY	1	89817374	1524314 EE-TECH
4	DRUM VARIATOR	1	84035748	0353283
5	GRAIN TANK DISCHARGE	1	84462590	0502215
5	ROTARY SCREEN DRIVE AND FAN	1	747177	0272247
6	MAIN DRIVE	1	84993120	0325376 EE-TECH
7	HYDROSTATIC PUMP DRIVE	1	80427456	0101168
8	HYDROSTATIC PUMP DRIVE	1	84607713	0324271 EE-TECH
9	STRAW WALKER DRIVE	1	87521887	1401234
9	GRASS SEED EQUIPMENT	1	84452153	1510140
10	GRAIN ELEVATOR BOTTOM AUGER	1	80422731	0302248
12	CHAFF SPREADER	1	84790244	1201153
13	CHOPPER DRIVE	1	84075955	1623354
14	CHOPPER DRIVE	1	84076421	0323453

CSX 7050 - HILLSIDE (CONTINUED)

			OE	
15	DRIVE, ROTARY SCREEN AND FAN	2	84061463	1472251
16	DRIVE, ROTARY SCREEN AND FAN	1	87374615	1400264
17	ALTERNATOR DRIVE	1	84817626	0372245
20	DRUM DRIVE	1	84072772	1825189
20	DRUM DRIVE, ROTATION SPEED SLOW	1	84072815	1225216
21	STRAW SHAKER DRIVE	1	84817635	0102176
22	FAN VARI-DRIVE	1	84073979	1510174
23	ROTARY SEPARATOR DRIVE AND SHAFT	1	84073933	2602145
24	CHOPPER DRIVE	1	84075955	1623354
25	CHOPPER DRIVE	1	84076421	0323453
26	CHAFF SPREADER	1	84790244	1201153
26	ROTARY SCREEN DRIVE AND FAN	1	84989965	1400235
27	CHAFF SPREADER	1	84790244	1201153
36	GRASS SEED EQUIPMENT	1	84452112	0301131
36	ROTARY SCREEN DRIVE AND FAN	2	84061465	1472251

CSX 7060

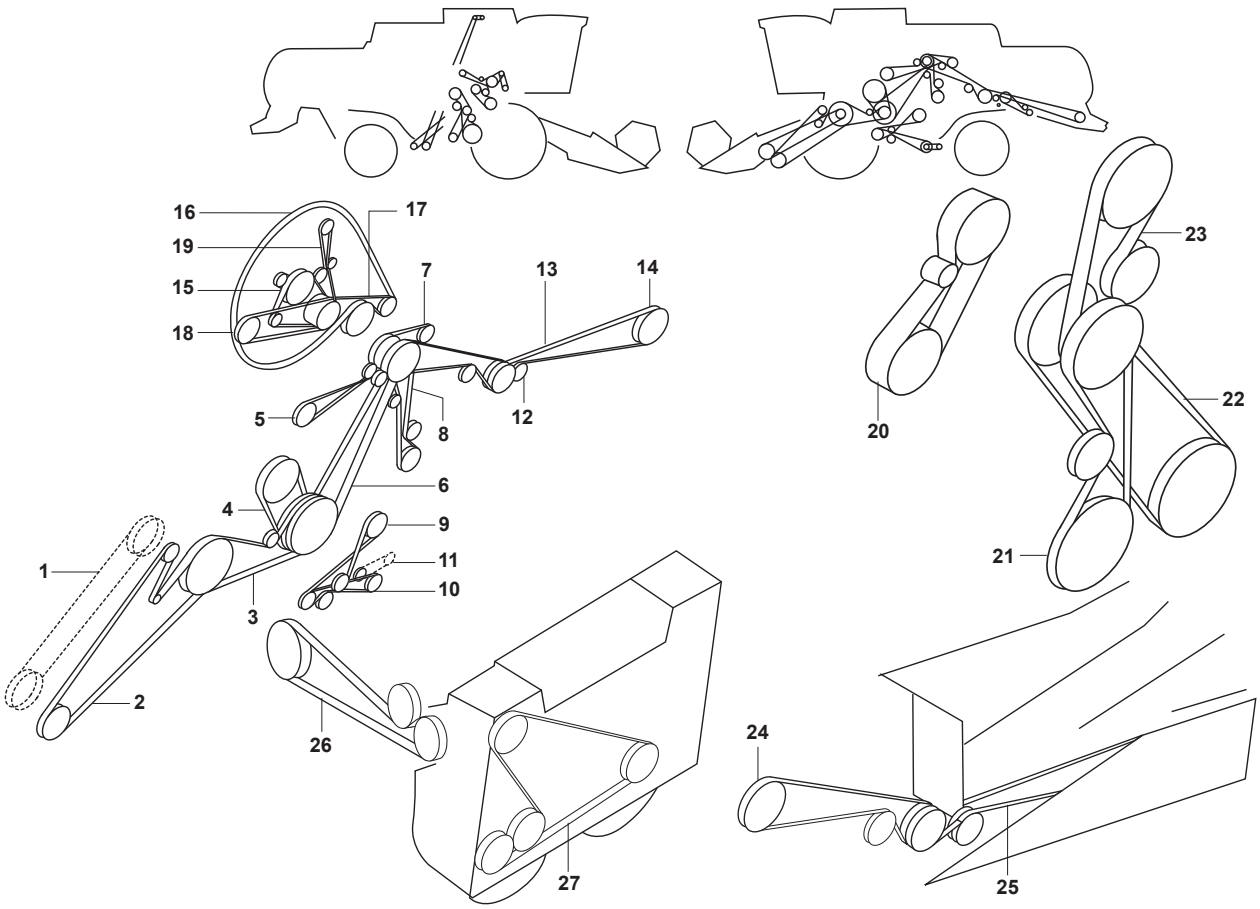

			OE	
2	STRAW ELEVATOR DRIVE, 2HB	1	84981586	0323507
2	STRAW ELEVATOR DRIVE, 3HB	1	84991234	0324509
3	HEADER DRIVE ENGAGING IDLER 2HB ONLY	1	84446792	1623311 EE-TECH
3	HEADER DRIVE ENGAGING IDLER 3HB ONLY	1	89817374	1524314 EE-TECH
4	DRUM VARIATOR	1	84035748	0353283
5	GRAIN TANK DISCHARGE	1	84462590	0502215
5	ROTARY SCREEN DRIVE AND FAN	1	747177	0272247
6	MAIN DRIVE	1	84993120	0325376 EE-TECH
7	HYDROSTATIC PUMP DRIVE	1	80427456	0101168
8	HYDROSTATIC PUMP DRIVE	1	84607712	0324261 EE-TECH
9	STRAW WALKER DRIVE	1	87521887	1401234
9	GRASS SEED EQUIPMENT	1	84452153	1510140
10	GRAIN ELEVATOR BOTTOM AUGER	1	80422731	0302248
12	CHAFF SPREADER	1	84790244	1201153
13	CHOPPER DRIVE	1	84075955	1623354
14	CHOPPER DRIVE	1	84076421	0323453

CSX 7060 (CONTINUED)

			OE	
15	DRIVE, ROTARY SCREEN AND FAN	2	84061463	1472251
16	DRIVE, ROTARY SCREEN AND FAN	1	87374615	1400264
17	ALTERNATOR DRIVE	1	84817626	0372245
20	DRUM DRIVE	1	84072772	1825189
20	DRUM DRIVE, ROTATION SPEED SLOW	1	84072815	1225216
21	STRAW SHAKER DRIVE	1	84817635	0102176
22	FAN VARI-DRIVE	1	84073979	1510174
23	ROTARY SEPARATOR DRIVE AND SHAFT	1	84073933	2602145
24	CHOPPER DRIVE	1	84075955	1623354
25	CHOPPER DRIVE	1	84076421	0323453
26	CHAFF SPREADER	1	84790244	1201153
27	CHAFF SPREADER	1	84790355	0204251
36	GRASS SEED EQUIPMENT	1	84452112	0301131
36	ROTARY SCREEN DRIVE AND FAN	2	84061465	1472251

CSX 7070

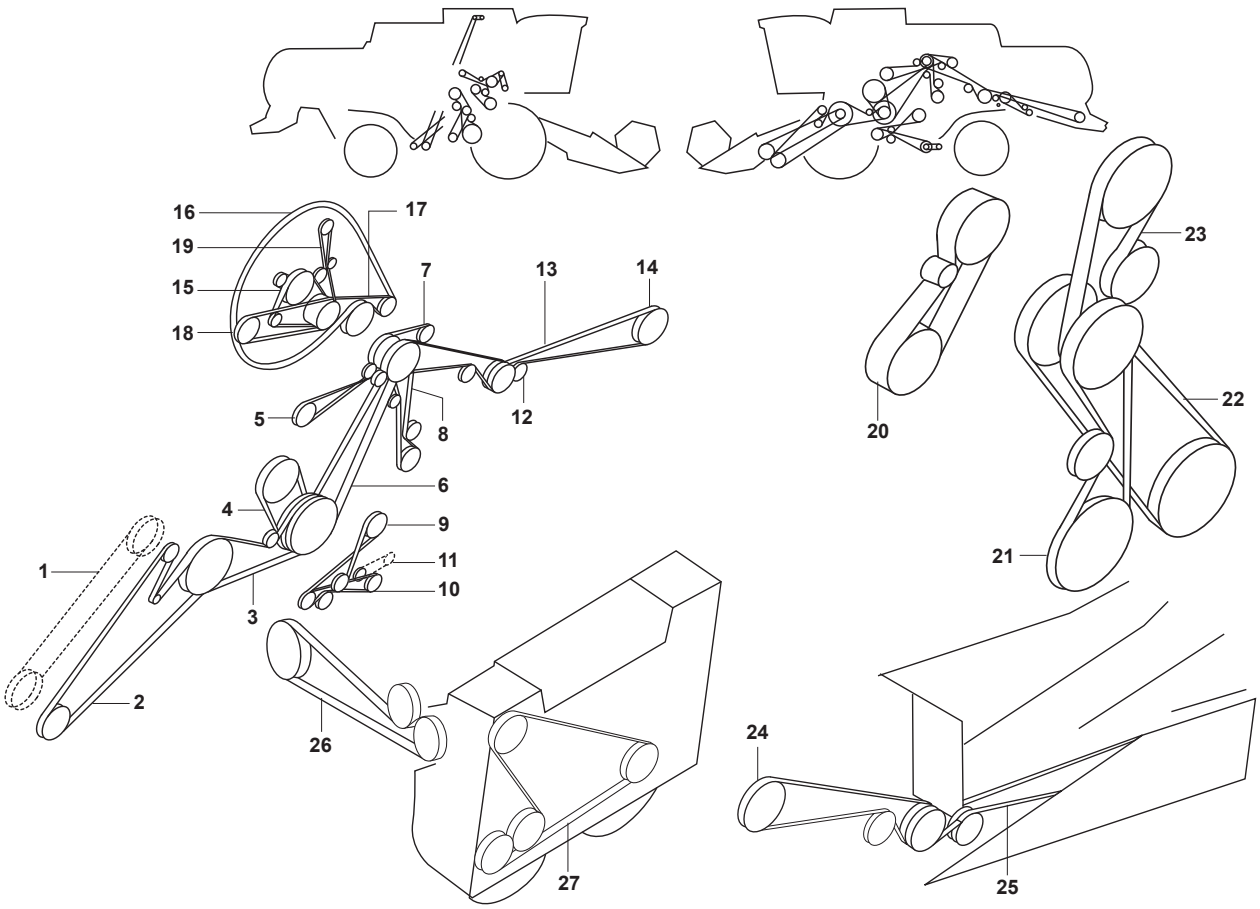

			OE	
2	STRAW ELEVATOR DRIVE, 2HB	1	84981586	0323507
2	STRAW ELEVATOR DRIVE, 3HB	1	84991234	0324509
3	HEADER DRIVE ENGAGING IDLER 2HB ONLY	1	84446792	1623311 EE-TECH
3	HEADER DRIVE ENGAGING IDLER 3HB ONLY	1	89817374	1524314 EE-TECH
4	DRUM VARIATOR	1	84035748	0353283
5	GRAIN TANK DISCHARGE	1	84462590	0502215
5	ROTARY SCREEN DRIVE AND FAN	1	747177	0272247
6	MAIN DRIVE	1	84993120	0325376 EE-TECH
7	HYDROSTATIC PUMP DRIVE	1	80427456	0101168
8	HYDROSTATIC PUMP DRIVE	1	84607712	0324261 EE-TECH
9	STRAW WALKER DRIVE	1	87521887	1401234
9	GRASS SEED EQUIPMENT	1	84452153	1510140
10	GRAIN ELEVATOR BOTTOM AUGER	1	80422731	0302248
12	CHAFF SPREADER	1	84790244	1201153
13	CHOPPER DRIVE	1	84075955	1623354
14	CHOPPER DRIVE	1	84076421	0323453

CSX 7070 (CONTINUED)

			OE	
15	DRIVE, ROTARY SCREEN AND FAN	2	84061463	1472251
16	DRIVE, ROTARY SCREEN AND FAN	1	87374615	1400264
17	ALTERNATOR DRIVE	1	84817626	0372245
20	DRUM DRIVE	1	84072772	1825189
20	DRUM DRIVE, ROTATION SPEED SLOW	1	84072815	1225216
21	STRAW SHAKER DRIVE	1	84817635	0102176
22	FAN VARI-DRIVE	1	84073979	1510174
23	ROTARY SEPARATOR DRIVE AND SHAFT	1	84073933	2602145
24	CHOPPER DRIVE	1	84075955	1623354
25	CHOPPER DRIVE	1	84076421	0323453
26	CHAFF SPREADER	1	84790244	1201153
26	ROTARY SCREEN DRIVE AND FAN	1	84989965	1400235
27	CHAFF SPREADER	1	84790244	1201153
36	GRASS SEED EQUIPMENT	1	84452112	0301131
36	ROTARY SCREEN DRIVE AND FAN	2	84061465	1472251

CSX 7080

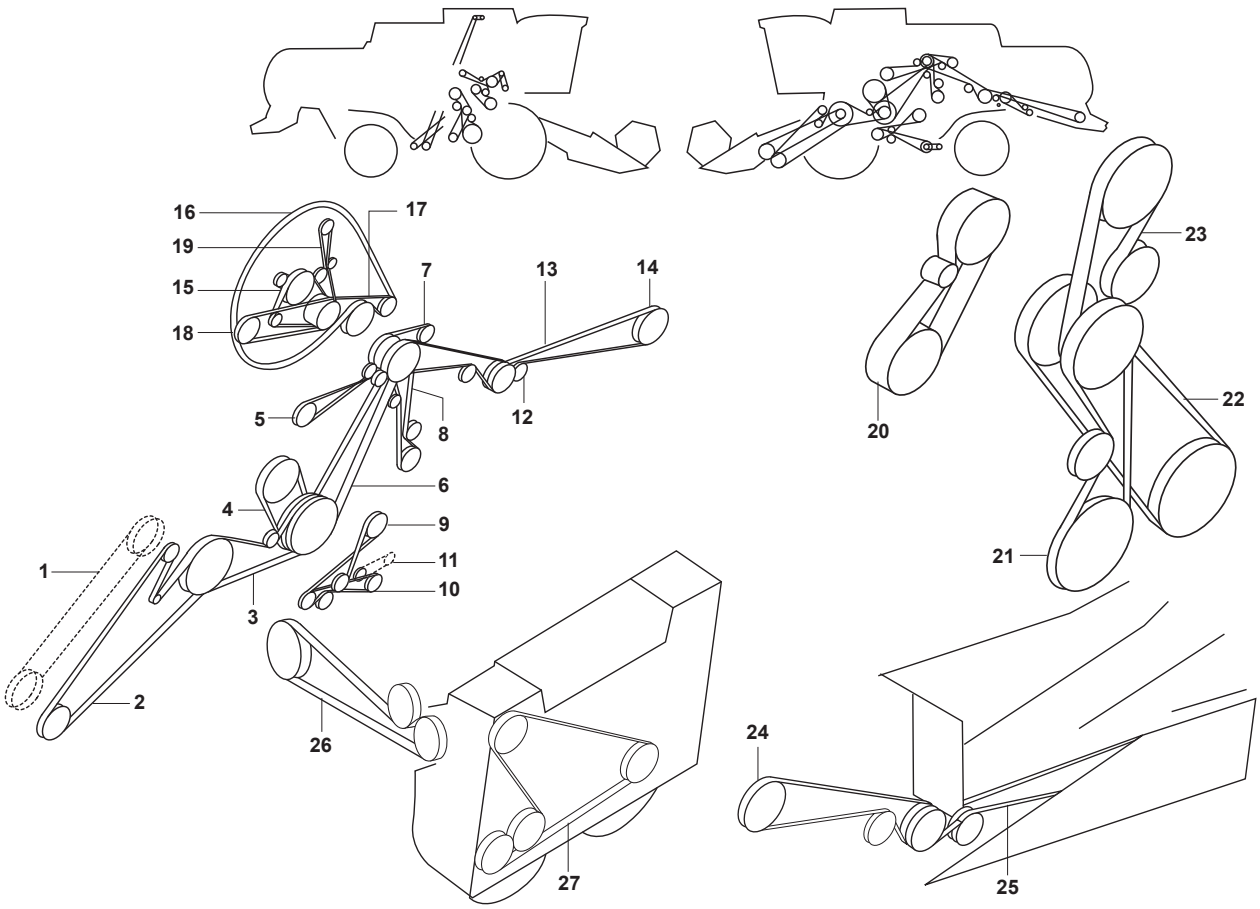

			OE	
2	STRAW ELEVATOR DRIVE, 2HB	1	84981586	0323507
2	STRAW ELEVATOR DRIVE, 3HB	1	84991234	0324509
3	HEADER DRIVE ENGAGING IDLER 2HB ONLY	1	84446792	1623311 EE-TECH
3	HEADER DRIVE ENGAGING IDLER 3HB ONLY	1	89817374	1524314 EE-TECH
4	DRUM VARIATOR	1	84035748	0353283
5	GRAIN TANK DISCHARGE	1	84462590	0502215
6	MAIN DRIVE	1	84993120	0325376 EE-TECH
7	HYDROSTATIC PUMP DRIVE	1	80427456	0101168
8	HYDROSTATIC PUMP DRIVE	1	84607713	0324271 EE-TECH
9	STRAW WALKER DRIVE	1	87521887	1401234
10	GRAIN ELEVATOR BOTTOM AUGER	1	80422731	0302248
12	CHAFF SPREADER	1	84790244	1201153
13	CHOPPER DRIVE	1	84075955	1623354
14	CHOPPER DRIVE	1	84076421	0323453
15	DRIVE, ROTARY SCREEN AND FAN	2	84061463	1472251
16	DRIVE, ROTARY SCREEN AND FAN	1	87374615	1400264

CSX 7080 (CONTINUED)

			OE	
17	ALTERNATOR DRIVE	1	84817626	0372245
20	DRUM DRIVE	1	84072772	1825189
20	DRUM DRIVE, ROTATION SPEED SLOW	1	84072815	1225216
21	STRAW SHAKER DRIVE	1	84817635	0102176
22	FAN VARI-DRIVE	1	84073979	1510174
23	ROTARY SEPARATOR DRIVE AND SHAFT	1	84073933	2602145
24	CHOPPER DRIVE	1	84075955	1623354
25	CHOPPER DRIVE	1	84076421	0323453
26	CHAFF SPREADER	1	84790244	1201153
27	CHAFF SPREADER	1	84790356	0104278
36	GRASS SEED EQUIPMENT	1	84452112	0301131
36	ROTARY SCREEN DRIVE AND FAN	2	84061465	1472251

CX 720

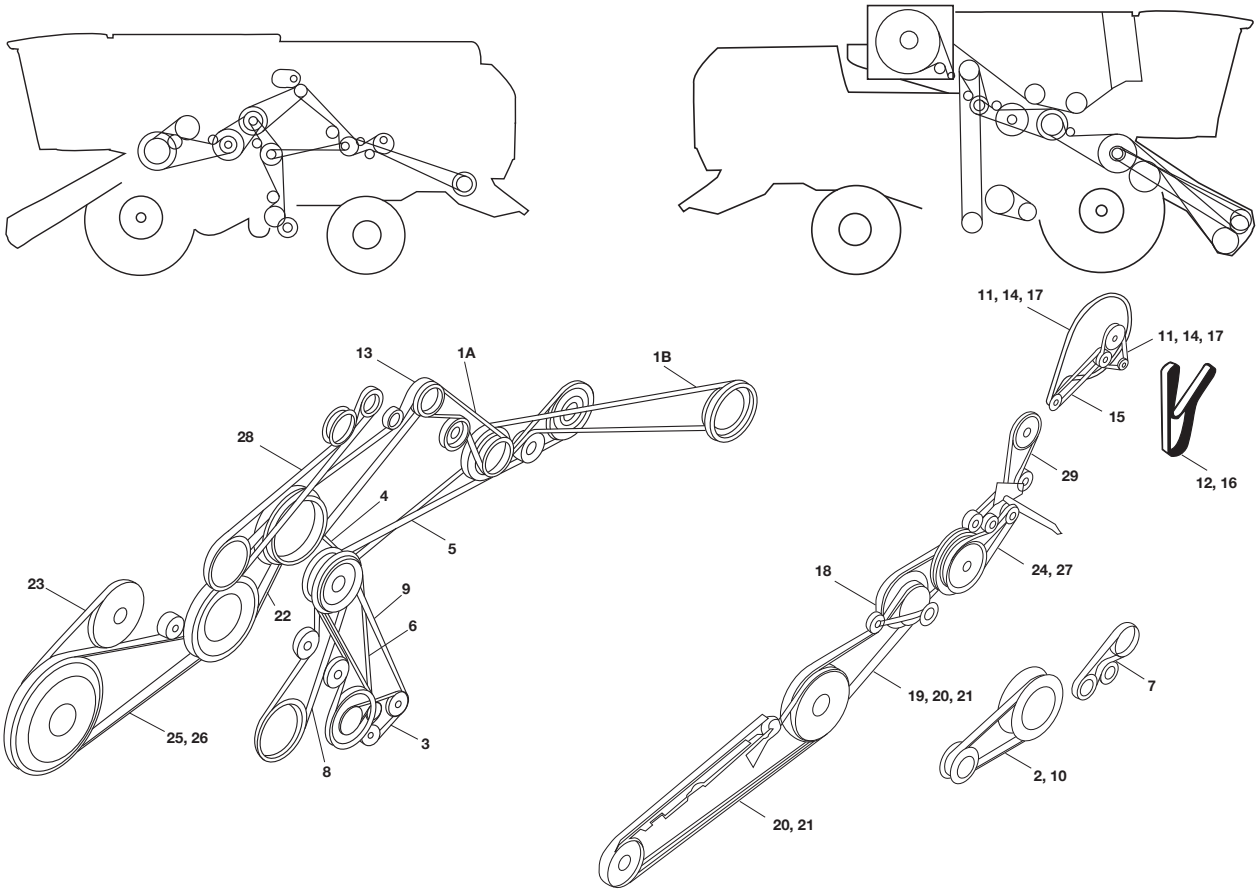

			OE	
1A	CHOPPER DRIVE	1	84075345	1423286
1B	CHOPPER DRIVE	1	84075635	0223404 EE-TECH
2	GRASS SEED EQUIPMENT - ACCESSORIES FOR SELF LEVELLING ONLY	1	84023277	0303117
2	GRASS SEED EQUIPMENT - ACCESSORIES FOR FIXED SHOE ONLY	1	84023278	0360230
3	SHAKER SHOE DRIVE - SELF-LEVELLING	2	84056913	1201153
4	INTERMEDIATE SHAFT - CLEANING DRIVE	1	84057392	0223201
5	STRAW WALKER DRIVE	1	84057482	0301339
6	SHAKER SHOE AND TAILINGS ELEVATOR DRIVE - SELF LEVELLING	1	84057874	0102250
7	TAILINGS ELEVATORS - BOTTOM AUGER AND (RIGHT HAND) DRIVE	2	84058339	0101087
8	SHAKER SHOE DRIVE - FIXED SHOE	1	84432785	0202235
9	TAILINGS ELEVATOR DRIVE - FIXED SHOE	1	84435035	1123301
10	MAIN FAN VARIABLE SPEED DRIVE FOR SELF LEVELLING ONLY	1	9502654	0303144
10	MAIN FAN VARIABLE SPEED DRIVE FOR FIXED SHOE ONLY	1	919739	0303147
11	ROTARY SCREEN AND FAN	1	84057085	0100272
12	ALTERNATOR, WATERPUMP AND AIR COMPRESSOR	1	84057710	0385354
13	MAIN DRIVE	1	84057914	1425268
14	ROTARY SCREEN AND FAN	2	84061465	1472251

CX 720 (CONTINUED)

			OE	
15	BLOW-OFF SYSTEM, AIR COMPRESSOR	2	84061465	1472251
17	ROTARY SCREEN AND FAN, FOR HIGH SPEED FAN ONLY	2	87337385	0122155
17	ROTARY SCREEN AND FAN	2	9835816	0172253
18	HEADER DRIVE	1	84061279	0724325 EE-TECH
19	STRAW ELEVATOR DRIVE	1	84334995	0325607
20	STRAW ELEVATOR DRIVE	1	84434260	1423476
21	STRAW ELEVATOR DRIVE	1	84434295	1123301
22	DRUM DRIVE VARIABLE SPEED	1	84035748	0353283
23	BEATER DRIVE	1	84045256	1902204
24	ROTARY SEPARATOR DRIVE AND SHAFT	1	84057393	0223204
25	DRUM DRIVE WITH REDUCTOR	1	84061615	1624328
27	ROTARY SEPARATOR DRIVE AND SHAFT	1	84457079	0223204
28	UNLOADING AUGER DRIVE	1	84061293	0323282
29	ELEVATOR DRIVE GRAIN	1	84073457	0301147

CX 740

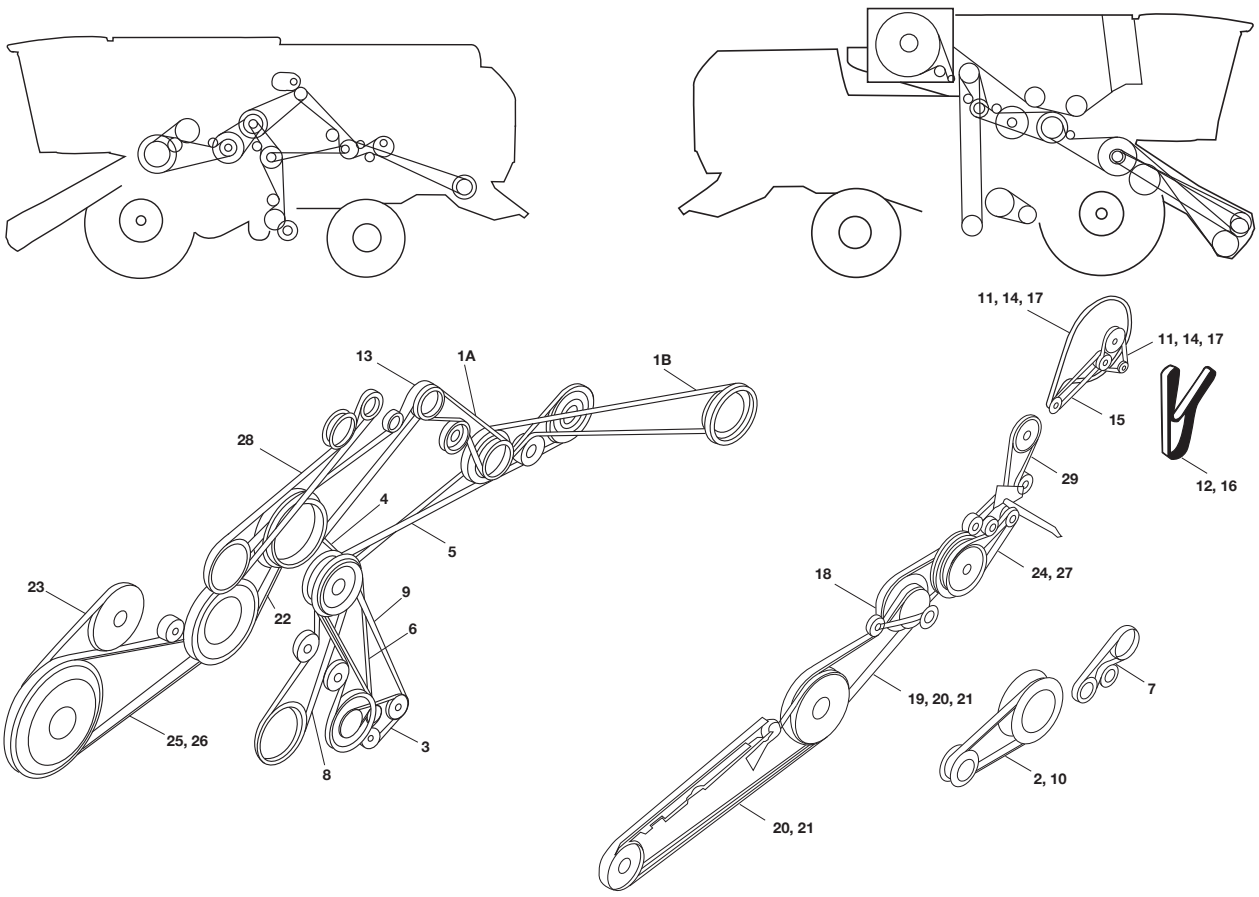

			OE	
1A	CHOPPER DRIVE	1	84075345	1423286
1B	CHOPPER DRIVE	1	84075635	0223404 EE-TECH
2	GRASS SEED EQUIPMENT - ACCESSORIES FOR SELF LEVELLING ONLY	1	84023277	0303117
2	GRASS SEED EQUIPMENT - ACCESSORIES FOR FIXED SHOE ONLY	1	84023278	0360230
3	SHAKER SHOE DRIVE - SELF-LEVELLING	2	84056913	1201153
4	INTERMEDIATE SHAFT - CLEANING DRIVE	1	84057392	0223201
5	STRAW WALKER DRIVE	1	84057482	0301339
6	SHAKER SHOE AND TAILINGS ELEVATOR DRIVE - SELF LEVELLING	1	84057874	0102250
7	TAILINGS ELEVATORS - BOTTOM AUGER AND (RIGHT HAND) DRIVE	2	84058339	0101087
8	SHAKER SHOE DRIVE - FIXED SHOE	1	84432785	0202235
9	TAILINGS ELEVATOR DRIVE - FIXED SHOE	1	84435035	1123301
10	MAIN FAN VARIABLE SPEED DRIVE FOR SELF LEVELLING ONLY	1	9502654	0303144
10	MAIN FAN VARIABLE SPEED DRIVE FOR FIXED SHOE ONLY	1	919739	0303147
11	ROTARY SCREEN AND FAN	1	84057085	0100272
12	ALTERNATOR, WATERPUMP AND AIR COMPRESSOR	1	84057710	0385354
13	MAIN DRIVE	1	84057914	1425268
14	ROTARY SCREEN AND FAN	2	84061465	1472251

CX 740 (CONTINUED)

			OE	
15	BLOW-OFF SYSTEM, AIR COMPRESSOR	2	84061465	1472251
17	ROTARY SCREEN AND FAN, FOR HIGH SPEED FAN ONLY	2	87337385	0122155
17	ROTARY SCREEN AND FAN	2	9835816	0172253
18	HEADER DRIVE	1	84061279	0724325 EE-TECH
19	STRAW ELEVATOR DRIVE	1	84334995	0325607
20	STRAW ELEVATOR DRIVE	1	84434260	1423476
21	STRAW ELEVATOR DRIVE	1	84434295	1123301
22	DRUM DRIVE VARIABLE SPEED	1	84035748	0353283
23	BEATER DRIVE	1	84045256	1902204
24	ROTARY SEPARATOR DRIVE AND SHAFT	1	84057393	0223204
25	DRUM DRIVE WITH REDUCTOR	1	84061615	1624328
27	ROTARY SEPARATOR DRIVE AND SHAFT	1	84457079	0223204
28	UNLOADING AUGER DRIVE	1	84061293	0323282
29	ELEVATOR DRIVE GRAIN	1	84073457	0301147

CX 760

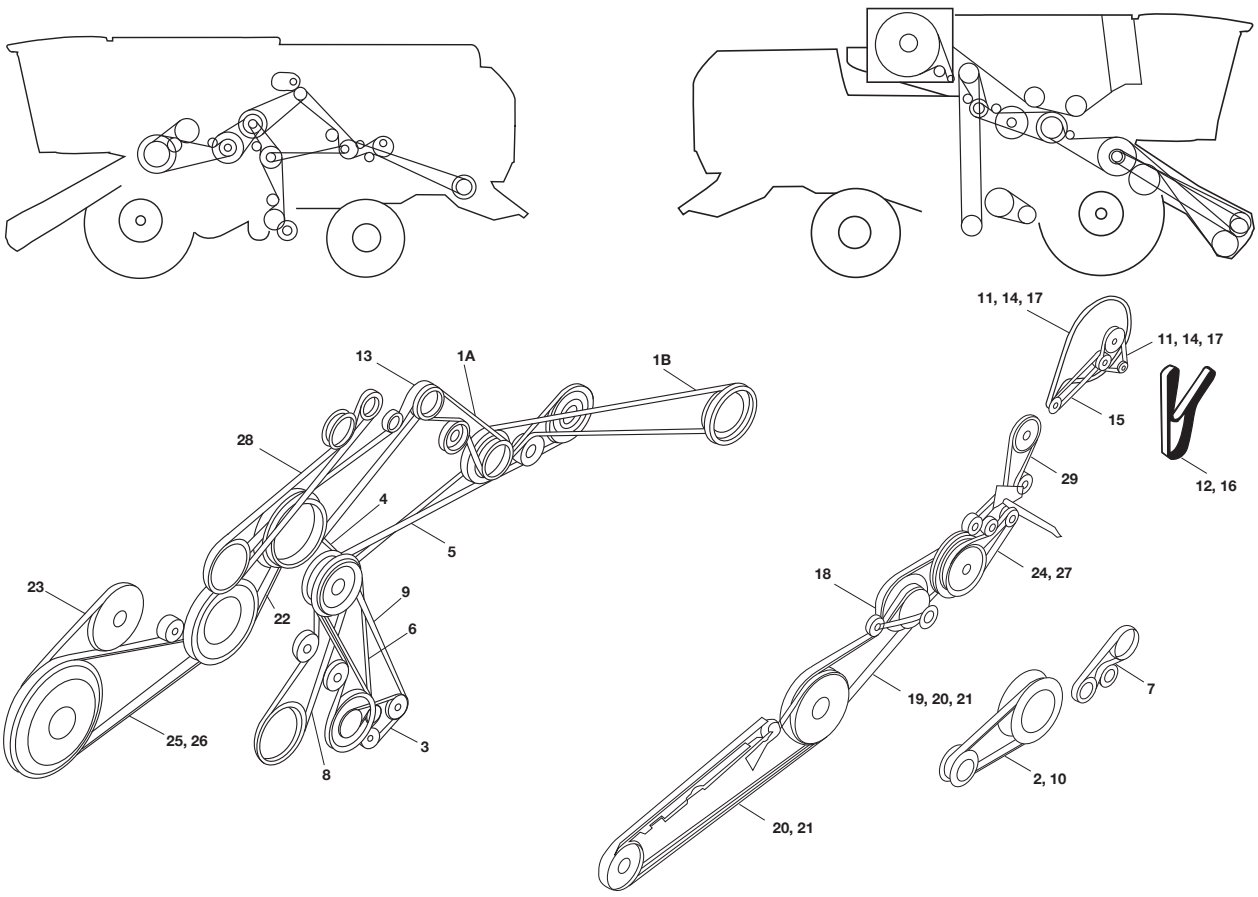

			OE	
1A	CHOPPER DRIVE	1	84075345	1423286
1B	CHOPPER DRIVE	1	84075635	0223404 EE-TECH
2	GRASS SEED EQUIPMENT - ACCESSORIES FOR SELF LEVELLING ONLY	1	84023277	0303117
2	GRASS SEED EQUIPMENT - ACCESSORIES FOR FIXED SHOE ONLY	1	84023278	0360230
3	SHAKER SHOE DRIVE - SELF-LEVELLING	2	84056913	1201153
4	INTERMEDIATE SHAFT - CLEANING DRIVE	1	84057392	0223201
5	STRAW WALKER DRIVE	1	84057482	0301339
6	SHAKER SHOE AND TAILINGS ELEVATOR DRIVE - SELF LEVELLING	1	84057874	0102250
7	TAILINGS ELEVATORS - BOTTOM AUGER AND (RIGHT HAND) DRIVE	2	84058339	0101087
8	SHAKER SHOE DRIVE - FIXED SHOE	1	84432785	0202235
9	TAILINGS ELEVATOR DRIVE - FIXED SHOE	1	84435035	1123301
10	MAIN FAN VARIABLE SPEED DRIVE FOR SELF LEVELLING ONLY	1	9502654	0303144
10	MAIN FAN VARIABLE SPEED DRIVE FOR FIXED SHOE ONLY	1	919739	0303147
11	ROTARY SCREEN AND FAN	1	84057085	0100272
12	ALTERNATOR, WATERPUMP AND AIR COMPRESSOR	1	84057710	0385354
13	MAIN DRIVE	1	84057914	1425268
14	ROTARY SCREEN AND FAN	2	84061465	1472251

CX 760 (CONTINUED)

			OE	
15	BLOW-OFF SYSTEM, AIR COMPRESSOR	2	84061465	1472251
17	ROTARY SCREEN AND FAN, FOR HIGH SPEED FAN ONLY	2	87337385	0122155
17	ROTARY SCREEN AND FAN	2	9835816	0172253
18	HEADER DRIVE	1	84061279	0724325 EE-TECH
19	STRAW ELEVATOR DRIVE	1	84334995	0325607
20	STRAW ELEVATOR DRIVE	1	84434260	1423476
21	STRAW ELEVATOR DRIVE	1	84434295	1123301
22	DRUM DRIVE VARIABLE SPEED	1	84035748	0353283
23	BEATER DRIVE	1	84045256	1902204
24	ROTARY SEPARATOR DRIVE AND SHAFT	1	84057393	0223204
25	DRUM DRIVE WITH REDUCTOR	1	84061615	1624328
27	ROTARY SEPARATOR DRIVE AND SHAFT	1	84457079	0223204
28	UNLOADING AUGER DRIVE	1	84061293	0323282
29	ELEVATOR DRIVE GRAIN	1	84073457	0301147

CX 780

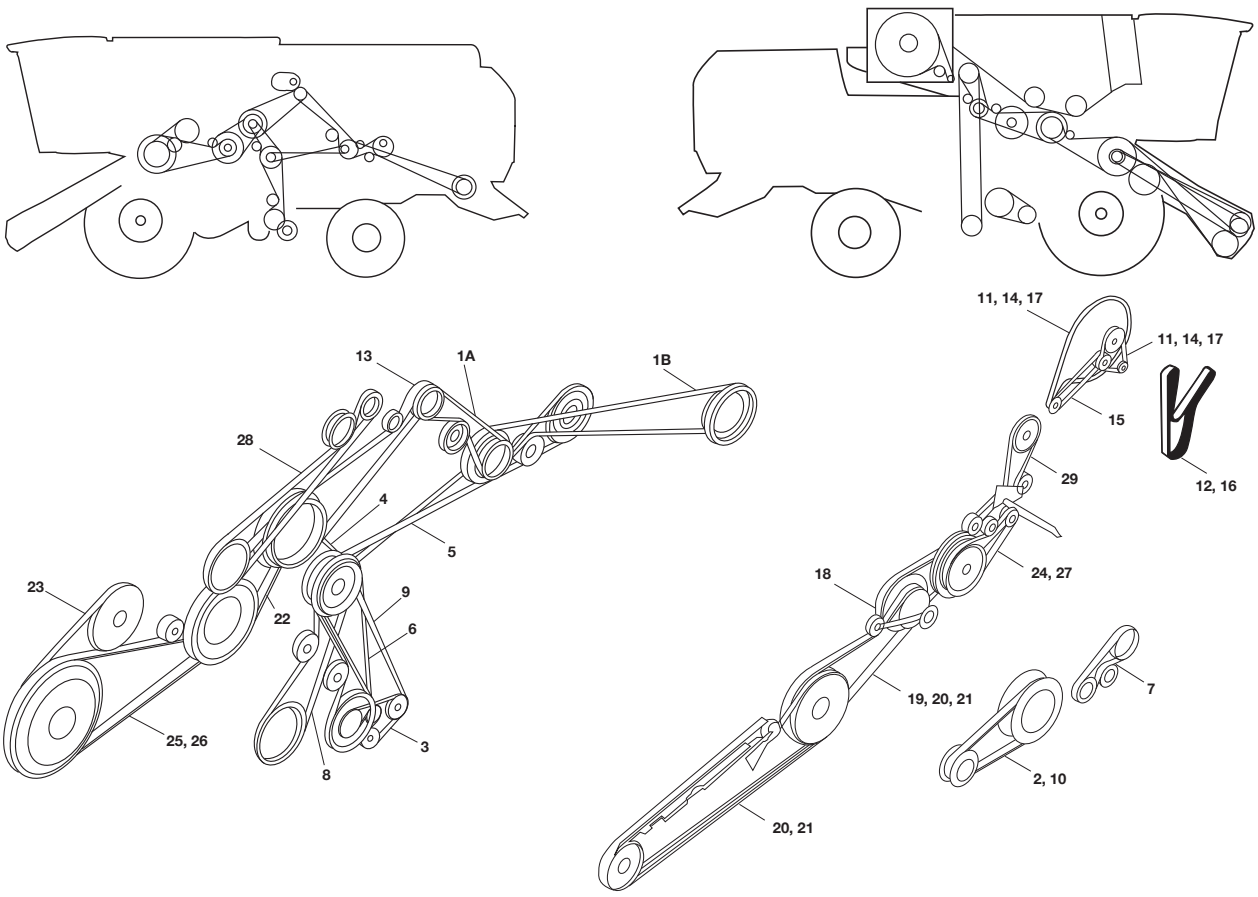

			OE	
1A	CHOPPER DRIVE	1	84075345	1423286
1B	CHOPPER DRIVE	1	84075635	0223404 EE-TECH
2	GRASS SEED EQUIPMENT - ACCESSORIES FOR SELF LEVELLING ONLY	1	84023277	0303117
2	GRASS SEED EQUIPMENT - ACCESSORIES FOR FIXED SHOE ONLY	1	84023278	0360230
3	SHAKER SHOE DRIVE - SELF-LEVELLING	2	84056913	1201153
4	INTERMEDIATE SHAFT - CLEANING DRIVE	1	84057392	0223201
5	STRAW WALKER DRIVE	1	84057482	0301339
6	SHAKER SHOE AND TAILINGS ELEVATOR DRIVE - SELF LEVELLING	1	84057874	0102250
7	TAILINGS ELEVATORS - BOTTOM AUGER AND (RIGHT HAND) DRIVE	2	84058339	0101087
8	SHAKER SHOE DRIVE - FIXED SHOE	1	84432785	0202235
9	TAILINGS ELEVATOR DRIVE - FIXED SHOE	1	84435035	1123301
10	MAIN FAN VARIABLE SPEED DRIVE FOR SELF LEVELLING ONLY	1	9502654	0303144
10	MAIN FAN VARIABLE SPEED DRIVE FOR FIXED SHOE ONLY	1	919739	0303147
11	ROTARY SCREEN AND FAN	1	84057085	0100272
12	ALTERNATOR, WATERPUMP AND AIR COMPRESSOR	1	84057710	0385354
13	MAIN DRIVE	1	84057914	1425268
14	ROTARY SCREEN AND FAN	2	84061465	1472251

CX 780 (CONTINUED)

			OE	
15	BLOW-OFF SYSTEM, AIR COMPRESSOR	2	84061465	1472251
17	ROTARY SCREEN AND FAN, FOR HIGH SPEED FAN ONLY	2	87337385	0122155
17	ROTARY SCREEN AND FAN	2	9835816	0172253
18	HEADER DRIVE	1	84061279	0724325 EE-TECH
19	STRAW ELEVATOR DRIVE	1	84334995	0325607
20	STRAW ELEVATOR DRIVE	1	84434260	1423476
21	STRAW ELEVATOR DRIVE	1	84434295	1123301
22	DRUM DRIVE VARIABLE SPEED	1	84035748	0353283
23	BEATER DRIVE	1	84045256	1902204
24	ROTARY SEPARATOR DRIVE AND SHAFT	1	84057393	0223204
25	DRUM DRIVE WITH REDUCTOR	1	84061615	1624328
27	ROTARY SEPARATOR DRIVE AND SHAFT	1	84457079	0223204
28	UNLOADING AUGER DRIVE	1	84061293	0323282
29	ELEVATOR DRIVE GRAIN	1	84073457	0301147

CX 820

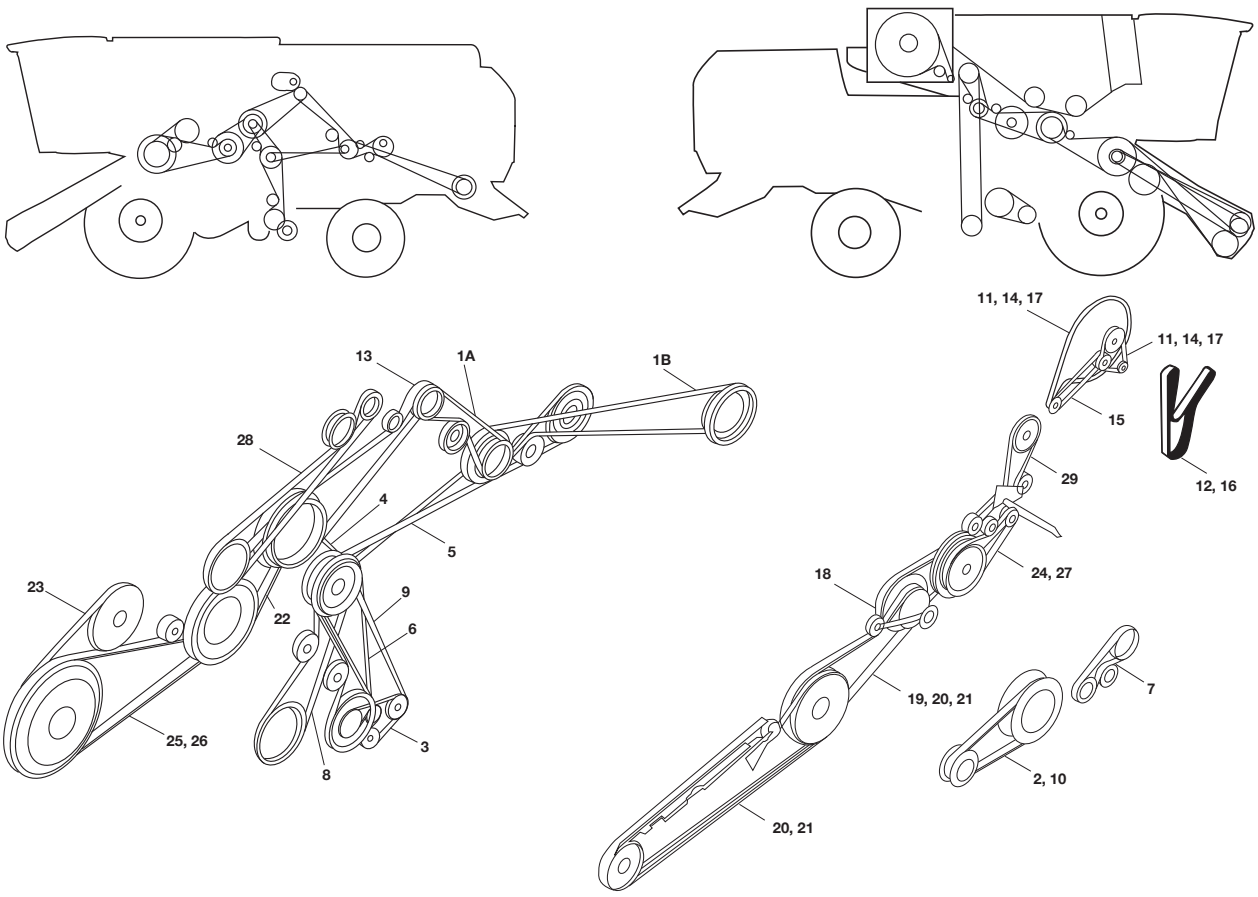

			OE	
1A	CHOPPER DRIVE	1	84075345	1423286
1B	CHOPPER DRIVE	1	84075635	0223404 EE-TECH
2	GRASS SEED EQUIPMENT - ACCESSORIES FOR SELF LEVELLING ONLY	1	84023277	0303117
2	GRASS SEED EQUIPMENT - ACCESSORIES FOR FIXED SHOE ONLY	1	84023278	0360230
3	SHAKER SHOE DRIVE - SELF-LEVELLING	2	84056913	1201153
4	INTERMEDIATE SHAFT - CLEANING DRIVE	1	84057392	0223201
5	STRAW WALKER DRIVE	1	84057482	0301339
6	SHAKER SHOE AND TAILINGS ELEVATOR DRIVE - SELF LEVELLING	1	84057874	0102250
7	TAILINGS ELEVATORS - BOTTOM AUGER AND (RIGHT HAND) DRIVE	2	84058339	0101087
8	SHAKER SHOE DRIVE - FIXED SHOE	1	84432785	0202235
9	TAILINGS ELEVATOR DRIVE - FIXED SHOE	1	84435035	1123301
10	THANK YOU GATES	1	84817627	0303144
10	MAIN FAN VARIABLE SPEED DRIVE FOR SELF LEVELLING ONLY	1	9502654	0303144
11	MAIN FAN VARIABLE SPEED DRIVE FOR FIXED SHOE ONLY	1	919739	0303147
12	ROTARY SCREEN AND FAN	1	84057085	0100272
13	ALTERNATOR, WATERPUMP AND AIR COMPRESSOR	1	84057710	0385354
14	MAIN DRIVE	1	84057914	1425268
15	BLOW-OFF SYSTEM, AIR COMPRESSOR	2	84061465	1472251

CX 820 (CONTINUED)

			OE	
16	ROTARY SCREEN AND FAN	2	84061465	1472251
17	AIR COMPRESSOR - BLOW-OFF SYSTEM	2	84061465	1472251
18	ALTERNATOR, WATERPUMP AND AIR COMPRESSOR HIGH FAN SPEED ONLY	1	86013886	☎
19	ROTARY SCREEN AND FAN	2	87337385	0122155
20	HEADER DRIVE	1	84061279	0724325 EE-TECH
21	STRAW ELEVATOR DRIVE	1	84334995	0325607
22	STRAW ELEVATOR DRIVE	1	84434260	1423476
23	STRAW ELEVATOR DRIVE	1	84434295	1123301
24	DRUM DRIVE VARIABLE SPEED	1	84035748	0353283
25	BEATER DRIVE	1	84045256	1902204
25	ROTARY SEPARATOR DRIVE AND SHAFT	1	84057393	0223204
27	DRUM DRIVE WITH REDUCTOR	1	84061615	1624328
28	DRUM DRIVE WITHOUT REDUCTOR	1	84061615	1624328
29	ROTARY SEPARATOR DRIVE AND SHAFT	1	84457079	0223204
3	UNLOADING AUGER DRIVE	1	84061293	0323282
20	ELEVATOR DRIVE GRAIN	1	84073457	0301147

CX 840

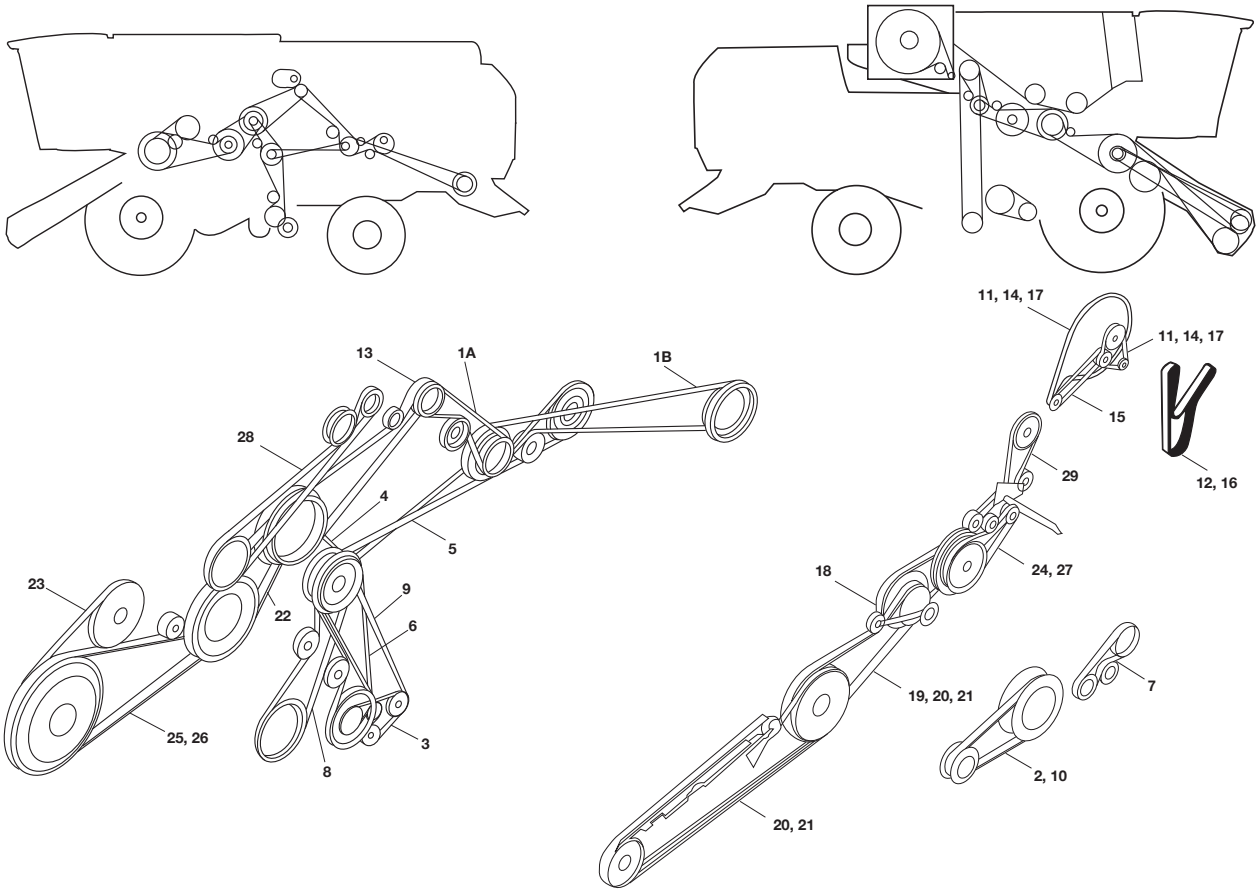

			OE	
1A	CHOPPER DRIVE	1	84075345	1423286
1B	CHOPPER DRIVE	1	84075635	0223404 EE-TECH
2	GRASS SEED EQUIPMENT - ACCESSORIES FOR SELF LEVELLING ONLY	1	84023277	0303117
2	GRASS SEED EQUIPMENT - ACCESSORIES FOR FIXED SHOE ONLY	1	84023278	0360230
3	SHAKER SHOE DRIVE - SELF-LEVELLING	2	84056913	1201153
4	INTERMEDIATE SHAFT - CLEANING DRIVE	1	84057392	0223201
5	STRAW WALKER DRIVE	1	84057482	0301339
6	SHAKER SHOE AND TAILINGS ELEVATOR DRIVE - SELF LEVELLING	1	84057874	0102250
7	TAILINGS ELEVATORS - BOTTOM AUGER AND (RIGHT HAND) DRIVE	2	84058339	0101087
8	SHAKER SHOE DRIVE - FIXED SHOE	1	84432785	0202235
9	TAILINGS ELEVATOR DRIVE - FIXED SHOE	1	84435035	1123301
10	MAIN FAN VARIABLE SPEED DRIVE FOR FIXED SHOE ONLY	1	919739	0303147
10	MAIN FAN VARIABLE SPEED DRIVE FOR SELF LEVELLING ONLY	1	9502654	0303144
11	ROTARY SCREEN AND FAN	1	84057085	0100272
12	ALTERNATOR, WATERPUMP AND AIR COMPRESSOR	1	84057710	0385354
13	MAIN DRIVE	1	84057914	1425268
14	ROTARY SCREEN AND FAN	2	84061465	1472251

CX 840 (CONTINUED)

			OE	
15	AIR COMPRESSOR - BLOW-OFF SYSTEM	2	84061465	1472251
16	ALTERNATOR, WATERPUMP AND AIR COMPRESSOR HIGH FAN SPEED ONLY	1	86013886	☎
17	ROTARY SCREEN AND FAN	2	87337385	0122155
17	ROTARY SCREEN AND FAN	2	9835816	0172253
18	HEADER DRIVE	1	84061279	0724325 EE-TECH
19	STRAW ELEVATOR DRIVE	1	84334995	0325607
20	STRAW ELEVATOR DRIVE	1	84434260	1423476
21	STRAW ELEVATOR DRIVE	1	84434295	1123301
22	DRUM DRIVE VARIABLE SPEED	1	84035748	0353283
23	BEATER DRIVE	1	84045256	1902204
24	ROTARY SEPARATOR DRIVE AND SHAFT	1	84057393	0223204
25	DRUM DRIVE WITH REDUCTOR	1	84061615	1624328
26	DRUM DRIVE WITHOUT REDUCTOR	1	84061615	1624328
27	ROTARY SEPARATOR DRIVE AND SHAFT	1	84457079	0223204
28	UNLOADING AUGER DRIVE	1	84061293	0323282
29	ELEVATOR DRIVE GRAIN	1	84073457	0301147

CX 860

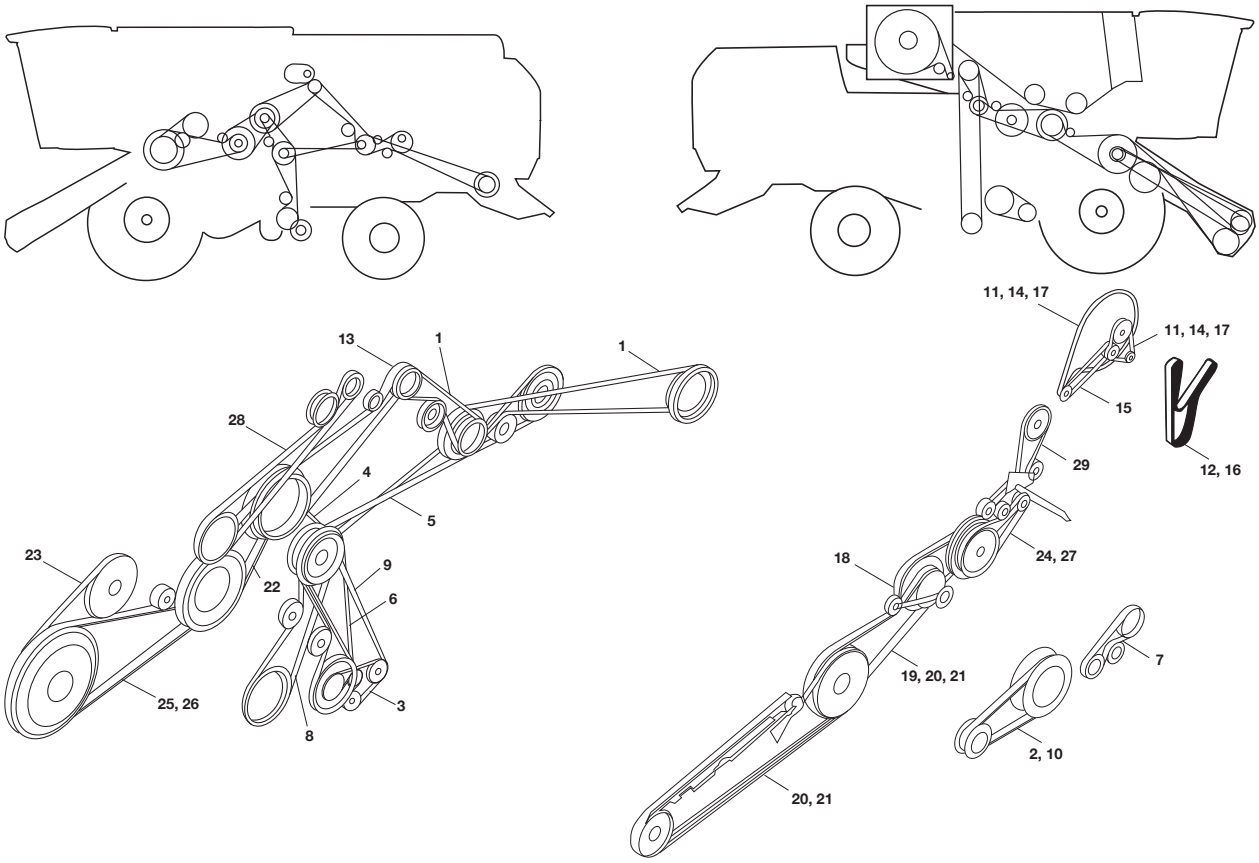

			OE	Gates
1A	CHOPPER DRIVE	1	84075345	1423286
1B	CHOPPER DRIVE	1	84075635	0223404 EE-TECH
2	GRASS SEED EQUIPMENT - ACCESSORIES FOR SELF LEVELLING ONLY	1	84023277	0303117
2	GRASS SEED EQUIPMENT - ACCESSORIES FOR FIXED SHOE ONLY	1	84023278	0360230
3	SHAKER SHOE DRIVE - SELF-LEVELLING	2	84056913	1201153
4	INTERMEDIATE SHAFT - CLEANING DRIVE	1	84057392	0223201
5	STRAW WALKER DRIVE	1	84057482	0301339
6	SHAKER SHOE AND TAILINGS ELEVATOR DRIVE - SELF LEVELLING	1	84057874	0102250
7	TAILINGS ELEVATORS - BOTTOM AUGER AND (RIGHT HAND) DRIVE	2	84058339	0101087
8	SHAKER SHOE DRIVE - FIXED SHOE	1	84432785	0202235
9	TAILINGS ELEVATOR DRIVE - FIXED SHOE	1	84435035	1123301
10	MAIN FAN VARIABLE SPEED DRIVE FOR FIXED SHOE ONLY	1	919739	0303147
10	MAIN FAN VARIABLE SPEED DRIVE FOR SELF LEVELLING ONLY	1	9502654	0303144
11	ROTARY SCREEN AND FAN	1	84057085	0100272
12	ALTERNATOR, WATERPUMP AND AIR COMPRESSOR	1	84057710	0385354
13	MAIN DRIVE	1	84057914	1425268
14	ROTARY SCREEN AND FAN	2	84061465	1472251
15	AIR COMPRESSOR - BLOW-OFF SYSTEM	2	84061465	1472251

CX 860 (CONTINUED)

			OE	
16	ALTERNATOR, WATERPUMP AND AIR COMPRESSOR HIGH FAN SPEED ONLY	1	84057710	0385354
18	HEADER DRIVE	1	84061279	0724325 EE-TECH
19	STRAW ELEVATOR DRIVE	1	84334995	0325607
20	STRAW ELEVATOR DRIVE	1	84434260	1423476
21	STRAW ELEVATOR DRIVE	1	84434295	1123301
22	DRUM DRIVE VARIABLE SPEED	1	84035748	0353283
23	BEATER DRIVE	1	84045256	1902204
24	ROTARY SEPARATOR DRIVE AND SHAFT	1	84057393	0223204
25	DRUM DRIVE WITH REDUCTOR	1	84061615	1624328
26	DRUM DRIVE WITHOUT REDUCTOR	1	84061615	1624328
27	ROTARY SEPARATOR DRIVE AND SHAFT	1	84457079	0223204
28	UNLOADING AUGER DRIVE	1	84061293	0323282
29	ELEVATOR DRIVE GRAIN	1	84073457	0301147

CX 880

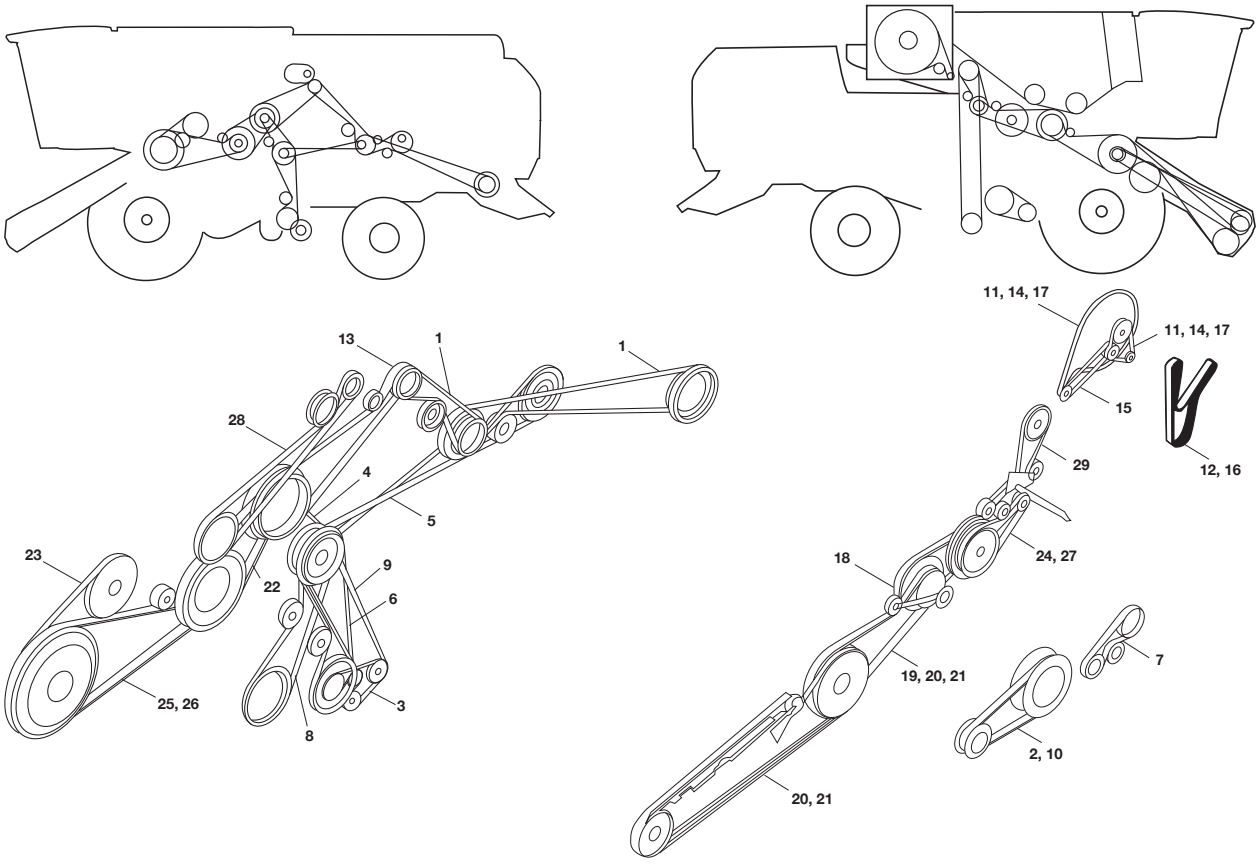

			OE	Gates
1A	CHOPPER DRIVE	1	84075345	1423286
1B	CHOPPER DRIVE	1	84075635	0223404 EE-TECH
2	GRASS SEED EQUIPMENT - ACCESSORIES FOR SELF LEVELLING ONLY	1	84023277	0303117
2	GRASS SEED EQUIPMENT - ACCESSORIES FOR FIXED SHOE ONLY	1	84023278	0360230
3	SHAKER SHOE DRIVE - SELF-LEVELLING	2	84056913	1201153
4	INTERMEDIATE SHAFT - CLEANING DRIVE	1	84057392	0223201
5	STRAW WALKER DRIVE	1	84057482	0301339
6	SHAKER SHOE AND TAILINGS ELEVATOR DRIVE - SELF LEVELLING	1	84057874	0102250
7	TAILINGS ELEVATORS - BOTTOM AUGER AND (RIGHT HAND) DRIVE	2	84058339	0101087
8	SHAKER SHOE DRIVE - FIXED SHOE	1	84432785	0202235
9	TAILINGS ELEVATOR DRIVE - FIXED SHOE	1	84435035	1123301
10	MAIN FAN VARIABLE SPEED DRIVE FOR FIXED SHOE ONLY	1	919739	0303147
10	MAIN FAN VARIABLE SPEED DRIVE FOR SELF LEVELLING ONLY	1	9502654	0303144
11	ROTARY SCREEN AND FAN	1	84057085	0100272
12	ALTERNATOR, WATERPUMP AND AIR COMPRESSOR	1	84057710	0385354
13	MAIN DRIVE	1	84057914	1425268
14	ROTARY SCREEN AND FAN	2	84061465	1472251
15	AIR COMPRESSOR - BLOW-OFF SYSTEM	2	84061465	1472251

CX 880 (CONTINUED)

			OE	
18	HEADER DRIVE	1	84061279	0724325 EE-TECH
19	STRAW ELEVATOR DRIVE	1	84334995	0325607
20	STRAW ELEVATOR DRIVE	1	84434260	1423476
21	STRAW ELEVATOR DRIVE	1	84434295	1123301
22	DRUM DRIVE VARIABLE SPEED	1	84035748	0353283
23	BEATER DRIVE	1	84045256	1902204
24	ROTARY SEPARATOR DRIVE AND SHAFT	1	84057393	0223204
25	DRUM DRIVE WITH REDUCTOR	1	84061615	1624328
26	DRUM DRIVE WITHOUT REDUCTOR	1	84061615	1624328
27	ROTARY SEPARATOR DRIVE AND SHAFT	1	84457079	0223204
28	UNLOADING AUGER DRIVE	1	84061293	0323282
29	ELEVATOR DRIVE GRAIN	1	84073457	0301147

CX 8030

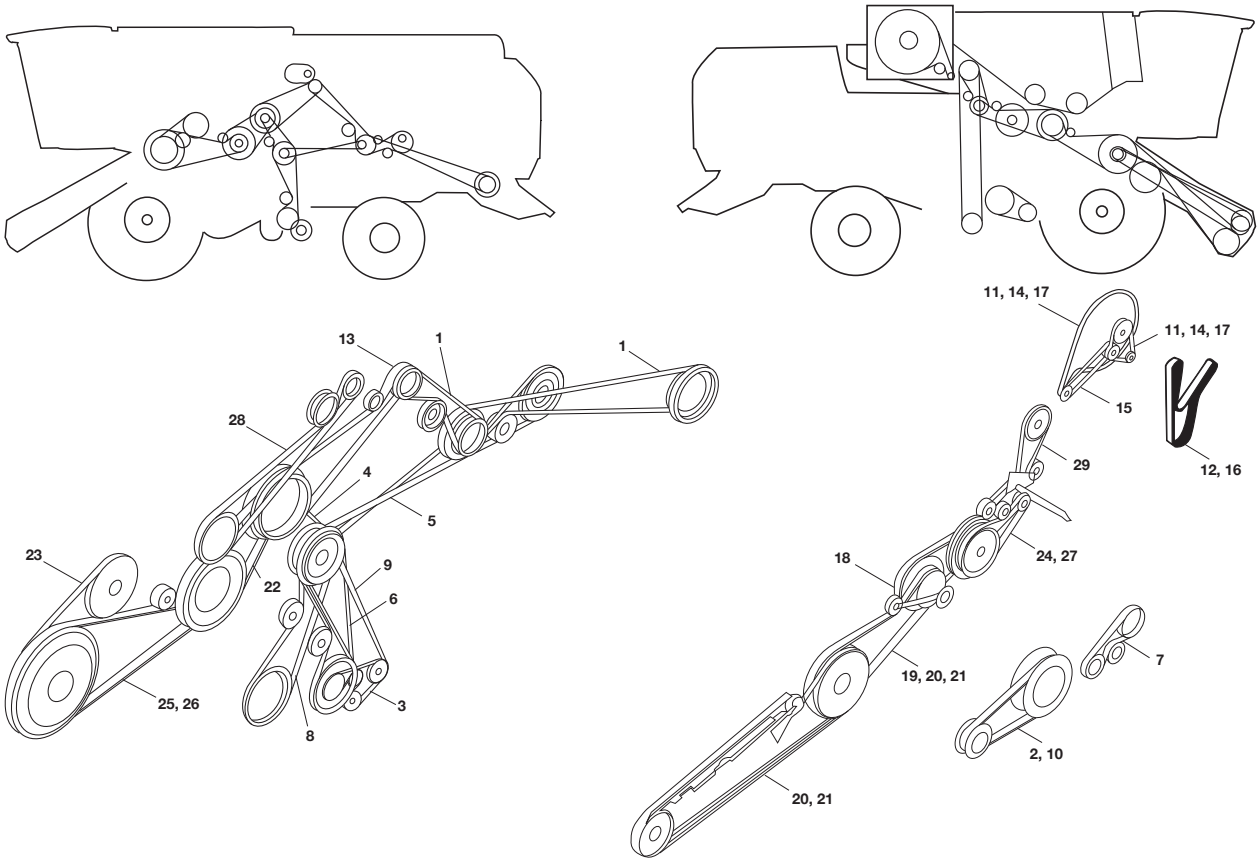

			OE	
1A	CHOPPER DRIVE (BSN C723)	1	84075345	1423286
1A	CHOPPER DRIVE (ASN D724)	1	84175581	0323285
1B	CHOPPER DRIVE (FOR RUSSIA ONLY)	1	84075635	0223404 EE-TECH
1B	CHOPPER DRIVE (BSN C723)	1	87339998	0323431
1B	CHOPPER DRIVE (ASN D724)	1	84175580	0323431
2	GRASS SEED EQUIPMENT, ACCESSORY, FOR SELF-LEVELLING ONLY	1	84023277	0303117
2	GRASS SEED EQUIPMENT, ACCESSORY, FOR FIXED SHOE ONLY	1	84023278	0360230
3	SHAKER SHOE DRIVE - SELF-LEVELLING	2	84056913	1201153
4	INTERMEDIATE SHAFT FOR CLEANING DRIVE, WITH SLOPE COMPENSATION	1	84057392	0223201
5	STRAW WALKER DRIVE (4HB)	1	84057482	0301339
6	SHAKER SHOE AND TAILINGS ELEVATOR DRIVE, WITH SLOPE COMPENSATION	1	84057874	0102250
7	TAILINGS ELEVATORS, BOTTOM AUGER (RIGHT HAND)	2	84058339	0101087
8	SHAKER SHOE DRIVE, FIXED SHOE, WITHOUT SLOPE COMPENSATION	1	84432785	0202235
9	TAILINGS ELEVATOR DRIVE, FIXED SHOE, WITHOUT SLOPE COMPENSATION	1	84435035	1123301
10	FAN VARI-DRIVE FOR SELF-LEVELLING ONLY	1	84817627	0303144
10	FAN VARI-DRIVE FOR FIXED SHOE ONLY	1	919739	0303147
11	ROTARY SCREEN AND FAN DRIVE (BSN C599)	1	84057085	0100272
11	ROTARY SCREEN AND FAN DRIVE (ASN D600)	1	87664428	0300267

CX 8030 (CONTINUED)

			OE	
12	ALTERNATOR, WATERPUMP AND AIR	1	84057710	0385354
13	MAIN DRIVE (BSN C723)	1	84057914	1425268
13	MAIN DRIVE (ASN D724)	1	84175582	1425268
14	ROTARY SCREEN AND FAN	2	84061465	1472251
15	ROTOR AND VENTILATOR DRIVE	2	89835816	0172253
18	HEADER DRIVE	1	84061279	0724325 EE-TECH
19	STRAW ELEVATOR	1	84334995	0325607
20	STRAW WALKER DRIVE (2HB)	1	84434295	1123301
21	STRAW WALKER DRIVE (2HB)	1	84434260	1423476
22	DRUM VARIATOR	1	84035748	0353283
23	BEATER DRIVE	1	84045256	1902204
24	ROTARY SEPARATOR DRIVE AND SHAFT	1	84457079	0223204
25	DRUM DRIVE WITHOUT REDUCTOR	1	84061615	1624328
28	UNLOADING AUGER	1	84061293	0323282
29	GRAIN ELEVATOR , DRIVE	1	84073457	0301147

CX 8040

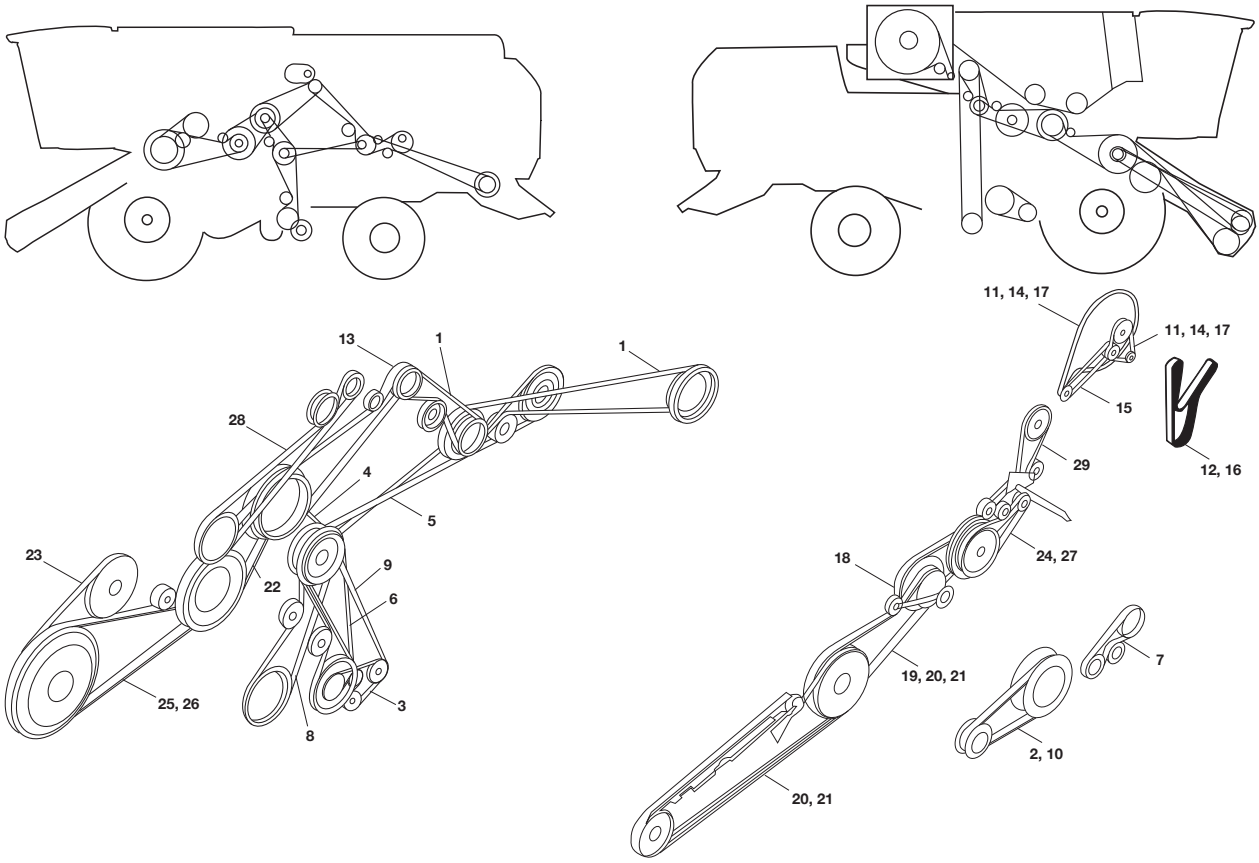

			OE	Gates
1A	CHOPPER DRIVE (BSN C723)	1	84075345	1423286
1A	CHOPPER DRIVE (ASN D724)	1	84175581	0323285
1B	CHOPPER DRIVE (FOR RUSSIA ONLY)	1	84075635	0223404 EE-TECH
1B	CHOPPER DRIVE (BSN C723)	1	87339998	0323431
1B	CHOPPER DRIVE (ASN D724)	1	84175580	0323431
2	GRASS SEED EQUIPMENT, ACCESSORY, FOR SELF-LEVELLING ONLY	1	84023277	0303117
2	GRASS SEED EQUIPMENT, ACCESSORY, FOR FIXED SHOE ONLY	1	84023278	0360230
3	SHAKER SHOE DRIVE - SELF-LEVELLING	2	84056913	1201153
4	INTERMEDIATE SHAFT FOR CLEANING DRIVE, WITH SLOPE COMPENSATION	1	84057392	0223201
5	STRAW WALKER DRIVE (4HB)	1	84057482	0301339
6	SHAKER SHOE AND TAILINGS ELEVATOR DRIVE, WITH SLOPE COMPENSATION	1	84057874	0102250
7	TAILINGS ELEVATORS, BOTTOM AUGER (RIGHT HAND)	2	84058339	0101087
8	SHAKER SHOE DRIVE, FIXED SHOE, WITHOUT SLOPE COMPENSATION	1	84432785	0202235
9	TAILINGS ELEVATOR DRIVE, FIXED SHOE, WITHOUT SLOPE COMPENSATION	1	84435035	1123301
10	FAN VARI-DRIVE FOR SELF-LEVELLING ONLY	1	84817627	0303144
10	FAN VARI-DRIVE FOR FIXED SHOE ONLY	1	919739	0303147
11	DRIVE, ROTARY SCREEN AND FAN (BSN C599)	1	84057085	0100272
11	DRIVE, ROTARY SCREEN AND FAN (ASN D600)	1	87664428	0300267

CX 8040 (CONTINUED)

			OE	
12	ALTERNATOR, WATERPUMP AND AIR	1	84057710	0385354
13	MAIN DRIVE (BSN C723)	1	84057914	1425268
13	MAIN DRIVE (ASN D724)	1	84175582	1425268
14	ROTARY SCREEN AND FAN	2	84061465	1472251
15	ROTOR AND VENTILATOR DRIVE	2	89835816	0172253
18	HEADER DRIVE	1	84061279	0724325 EE-TECH
19	STRAW ELEVATOR	1	84334995	0325607
20	STRAW WALKER DRIVE (2HB)	1	84434295	1123301
21	STRAW WALKER DRIVE (2HB)	1	84434260	1423476
22	DRUM VARIATOR	1	84035748	0353283
23	BEATER DRIVE	1	84045256	1902204
24	ROTARY SEPARATOR DRIVE AND SHAFT	1	84457079	0223204
25	DRUM DRIVE WITHOUT REDUCTOR	1	84061615	1624328
28	UNLOADING AUGER	1	84061293	0323282
29	GRAIN ELEVATOR , DRIVE	1	84073457	0301147

CX 8050

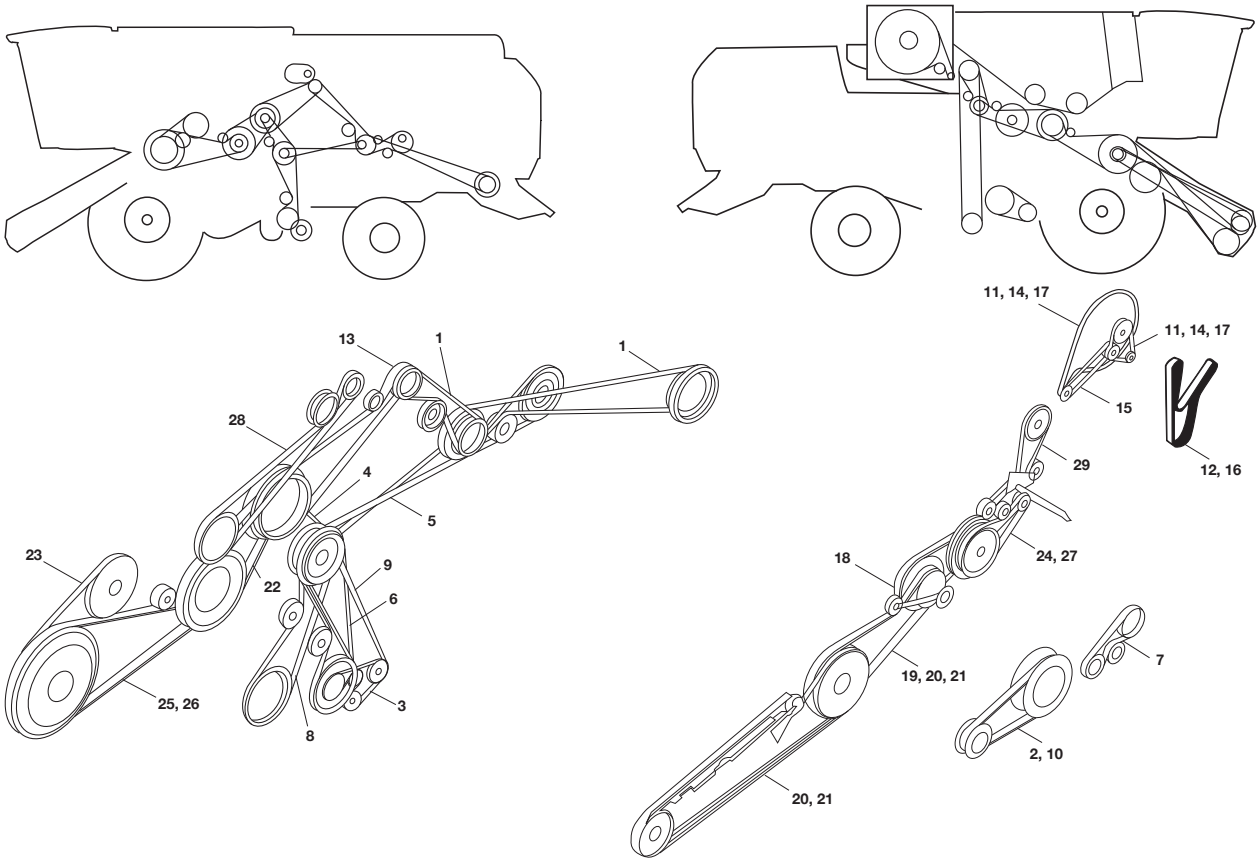

			OE	Gates
1A	CHOPPER DRIVE (BSN C723)	1	84075345	1423286
1A	CHOPPER DRIVE (ASN D724)	1	84175581	0323285
1B	CHOPPER DRIVE (FOR RUSSIA ONLY)	1	84075635	0223404 EE-TECH
1B	CHOPPER DRIVE (BSN C723)	1	87339998	0323431
1B	CHOPPER DRIVE (ASN D724)	1	84175580	0323431
2	GRASS SEED EQUIPMENT, ACCESSORY, FOR SELF-LEVELLING ONLY	1	84023277	0303117
2	GRASS SEED EQUIPMENT, ACCESSORY, FOR FIXED SHOE ONLY	1	84023278	0360230
3	SHAKER SHOE DRIVE - SELF-LEVELLING	2	84056913	1201153
4	INTERMEDIATE SHAFT FOR CLEANING DRIVE, WITH SLOPE COMPENSATION	1	84057392	0223201
5	STRAW WALKER DRIVE (4HB)	1	84057482	0301339
6	SHAKER SHOE AND TAILINGS ELEVATOR DRIVE, WITH SLOPE COMPENSATION	1	84057874	0102250
7	TAILINGS ELEVATORS, BOTTOM AUGER (RIGHT HAND)	2	84058339	0101087
8	SHAKER SHOE DRIVE, FIXED SHOE, WITHOUT SLOPE COMPENSATION	1	84432785	0202235
9	TAILINGS ELEVATOR DRIVE, FIXED SHOE, WITHOUT SLOPE COMPENSATION	1	84435035	1123301
10	FAN VARI-DRIVE FOR SELF-LEVELLING ONLY	1	84817627	0303144
10	FAN VARI-DRIVE FOR FIXED SHOE ONLY	1	919739	0303147
11	DRIVE, ROTARY SCREEN AND FAN (BSN C599)	1	84057085	0100272
11	DRIVE, ROTARY SCREEN AND FAN (ASN D600)	1	87664428	0300267

CX 8050 (CONTINUED)

			OE	
12	ALTERNATOR, WATERPUMP AND AIR	1	84057710	0385354
13	MAIN DRIVE (BSN C723)	1	84057914	1425268
13	MAIN DRIVE (ASN D724)	1	84175582	1425268
14	ROTARY SCREEN AND FAN	2	84061465	1472251
15	ROTOR AND VENTILATOR DRIVE	2	89835816	0172253
18	HEADER DRIVE	1	84061279	0724325 EE-TECH
19	STRAW ELEVATOR	1	84334995	0325607
20	STRAW WALKER DRIVE (2HB)	1	84434295	1123301
21	STRAW WALKER DRIVE (2HB)	1	84434260	1423476
22	DRUM VARIATOR	1	84035748	0353283
23	BEATER DRIVE	1	84045256	1902204
24	ROTARY SEPARATOR DRIVE AND SHAFT	1	84457079	0223204
25	DRUM DRIVE WITHOUT REDUCTOR	1	84061615	1624328
28	UNLOADING AUGER	1	84061293	0323282
29	GRAIN ELEVATOR , DRIVE	1	84073457	0301147

CX 8060

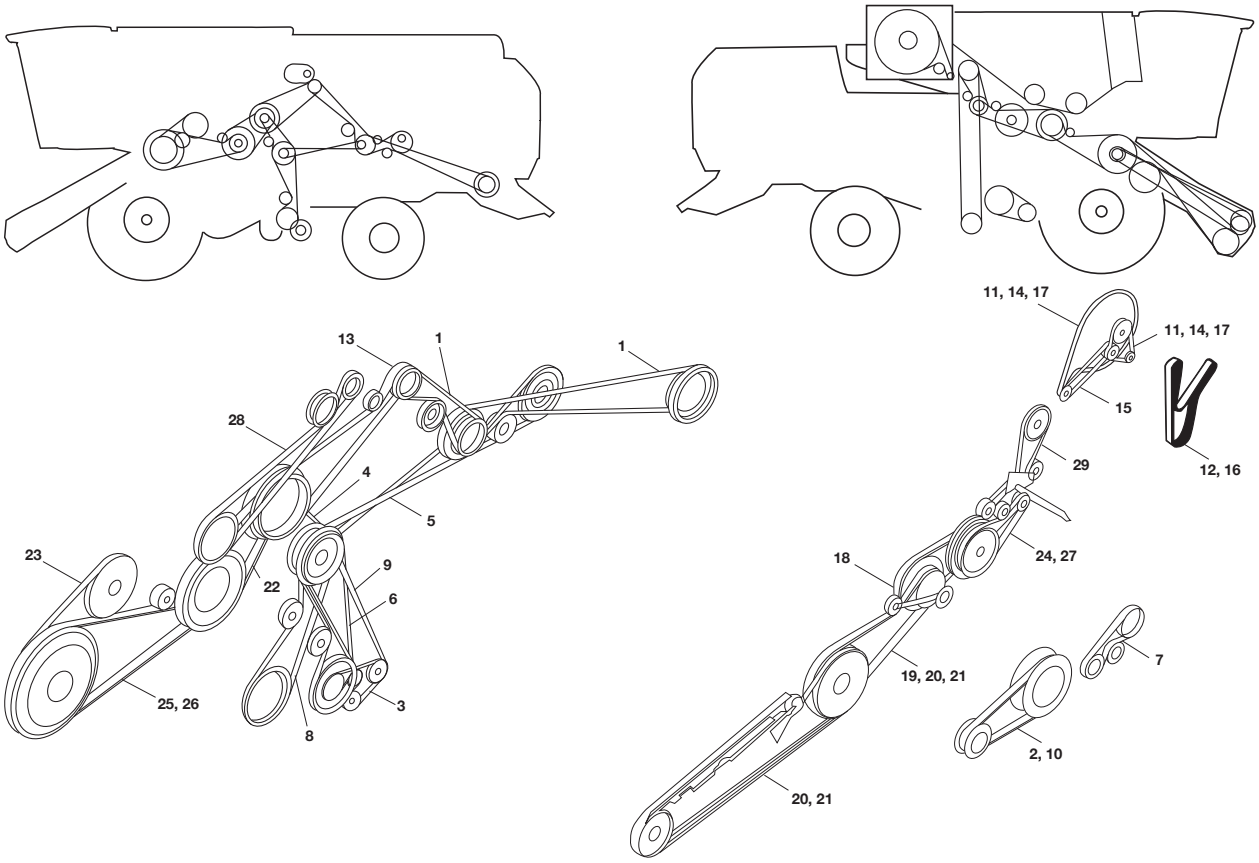

			OE	
1A	CHOPPER DRIVE (BSN C723)	1	84075345	1423286
1A	CHOPPER DRIVE (ASN D724)	1	84175581	0323285
1B	CHOPPER DRIVE (FOR RUSSIA ONLY)	1	84075635	0223404 EE-TECH
1B	CHOPPER DRIVE (BSN C723)	1	87339998	0323431
1B	CHOPPER DRIVE (ASN D724)	1	84175580	0323431
2	GRASS SEED EQUIPMENT, ACCESSORY, FOR SELF-LEVELLING ONLY	1	84023277	0303117
2	GRASS SEED EQUIPMENT, ACCESSORY, FOR FIXED SHOE ONLY	1	84023278	0360230
3	SHAKER SHOE DRIVE - SELF-LEVELLING	2	84056913	1201153
4	INTERMEDIATE SHAFT FOR CLEANING DRIVE, WITH SLOPE COMPENSATION	1	84057392	0223201
5	STRAW WALKER DRIVE (4HB)	1	84057482	0301339
6	SHAKER SHOE AND TAILINGS ELEVATOR DRIVE, WITH SLOPE COMPENSATION	1	84057874	0102250
7	TAILINGS ELEVATORS, BOTTOM AUGER (RIGHT HAND)	2	84058339	0101087
8	SHAKER SHOE DRIVE, FIXED SHOE, WITHOUT SLOPE COMPENSATION	1	84432785	0202235
9	TAILINGS ELEVATOR DRIVE, FIXED SHOE, WITHOUT SLOPE COMPENSATION	1	84435035	1123301
10	FAN VARI-DRIVE FOR SELF-LEVELLING ONLY	1	84817627	0303144
10	FAN VARI-DRIVE FOR FIXED SHOE ONLY	1	919739	0303147
11	DRIVE, ROTARY SCREEN AND FAN (BSN C599)	1	84057085	0100272
11	DRIVE, ROTARY SCREEN AND FAN (ASN D600)	1	87664428	0300267

CX 8060 (CONTINUED)

			OE	
12	ALTERNATOR, WATERPUMP AND AIR	1	84057710	0385354
13	MAIN DRIVE (BSN C723)	1	84057914	1425268
13	MAIN DRIVE (ASN D724)	1	84175582	1425268
14	ROTARY SCREEN AND FAN	2	84061465	1472251
15	ROTOR AND VENTILATOR DRIVE	2	89835816	0172253
18	HEADER DRIVE	1	84061279	0724325 EE-TECH
19	STRAW ELEVATOR	1	84334995	0325607
20	STRAW WALKER DRIVE (2HB)	1	84434295	1123301
21	STRAW WALKER DRIVE (2HB)	1	84434260	1423476
22	DRUM VARIATOR	1	84035748	0353283
23	BEATER DRIVE	1	84045256	1902204
24	ROTARY SEPARATOR DRIVE AND SHAFT	1	84457079	0223204
25	DRUM DRIVE WITHOUT REDUCTOR	1	84061615	1624328
28	UNLOADING AUGER	1	84061293	0323282
29	GRAIN ELEVATOR , DRIVE	1	84073457	0301147

CX 8070

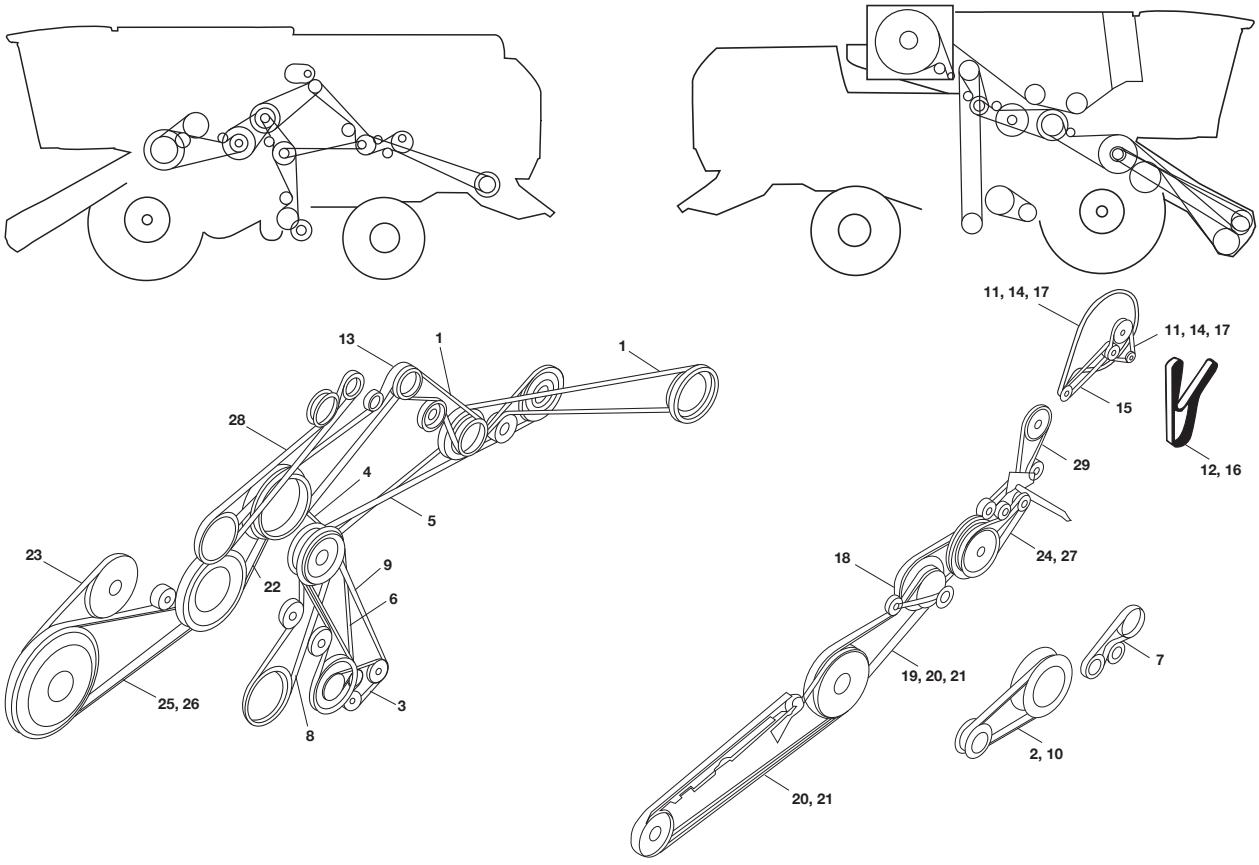

			OE	
1A	CHOPPER DRIVE (BSN C723)	1	84075345	1423286
1A	CHOPPER DRIVE (ASN D724)	1	84175581	0323285
1B	CHOPPER DRIVE (FOR RUSSIA ONLY)	1	84075635	0223404 EE-TECH
1B	CHOPPER DRIVE (BSN C723)	1	87339998	0323431
1B	CHOPPER DRIVE (ASN D724)	1	84175580	0323431
2	GRASS SEED EQUIPMENT, ACCESSORY, FOR SELF-LEVELLING ONLY	1	84023277	0303117
2	GRASS SEED EQUIPMENT, ACCESSORY, FOR FIXED SHOE ONLY	1	84023278	0360230
3	SHAKER SHOE DRIVE - SELF-LEVELLING	2	84056913	1201153
4	INTERMEDIATE SHAFT FOR CLEANING DRIVE, WITH SLOPE COMPENSATION	1	84057392	0223201
5	STRAW WALKER DRIVE (4HB)	1	84057482	0301339
6	SHAKER SHOE AND TAILINGS ELEVATOR DRIVE, WITH SLOPE COMPENSATION	1	84057874	0102250
7	TAILINGS ELEVATORS, BOTTOM AUGER (RIGHT HAND)	2	84058339	0101087
8	SHAKER SHOE DRIVE, FIXED SHOE, WITHOUT SLOPE COMPENSATION	1	84432785	0202235
9	TAILINGS ELEVATOR DRIVE, FIXED SHOE, WITHOUT SLOPE COMPENSATION	1	84435035	1123301
10	FAN VARI-DRIVE FOR SELF-LEVELLING ONLY	1	84817627	0303144
10	FAN VARI-DRIVE FOR FIXED SHOE ONLY	1	919739	0303147
11	DRIVE, ROTARY SCREEN AND FAN (BSN C599)	1	84057085	0100272
11	DRIVE, ROTARY SCREEN AND FAN (ASN D600)	1	87664428	0300267

CX 8070 (CONTINUED)

			OE	
12	ALTERNATOR, WATERPUMP AND AIR	1	84057710	0385354
13	MAIN DRIVE (BSN C723)	1	84057914	1425268
13	MAIN DRIVE (ASN D724)	1	84175582	1425268
14	ROTARY SCREEN AND FAN	2	84061465	1472251
15	ROTOR AND VENTILATOR DRIVE	2	89835816	0172253
18	HEADER DRIVE	1	84061279	0724325 EE-TECH
19	STRAW ELEVATOR	1	84334995	0325607
20	STRAW WALKER DRIVE (2HB)	1	84434295	1123301
21	STRAW WALKER DRIVE (2HB)	1	84434260	1423476
22	DRUM VARIATOR	1	84035748	0353283
23	BEATER DRIVE	1	84045256	1902204
24	ROTARY SEPARATOR DRIVE AND SHAFT	1	84457079	0223204
25	DRUM DRIVE WITHOUT REDUCTOR	1	84061615	1624328
28	UNLOADING AUGER	1	84061293	0323282
29	GRAIN ELEVATOR , DRIVE	1	84073457	0301147

CX 8080

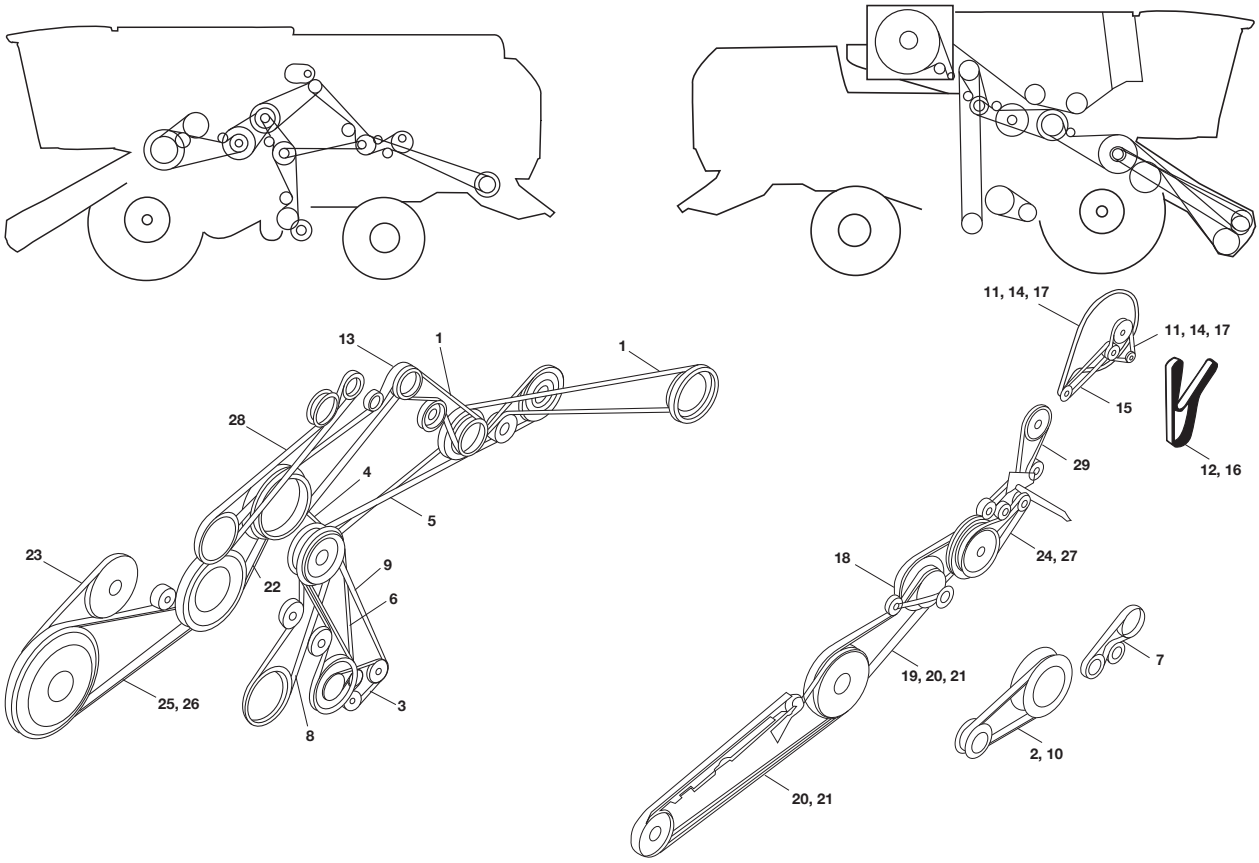

			OE	Gates
1A	CHOPPER DRIVE (BSN C723)	1	84075345	1423286
1A	CHOPPER DRIVE (ASN D724)	1	84175581	0323285
1B	CHOPPER DRIVE (FOR RUSSIA ONLY)	1	84075635	0223404 EE-TECH
1B	CHOPPER DRIVE (BSN C723)	1	87339998	0323431
1B	CHOPPER DRIVE (ASN D724)	1	84175580	0323431
2	GRASS SEED EQUIPMENT, ACCESSORY, FOR SELF-LEVELLING ONLY	1	84023277	0303117
2	GRASS SEED EQUIPMENT, ACCESSORY, FOR FIXED SHOE ONLY	1	84023278	0360230
3	SHAKER SHOE DRIVE - SELF-LEVELLING	2	84056913	1201153
4	INTERMEDIATE SHAFT FOR CLEANING DRIVE, WITH SLOPE COMPENSATION	1	84057392	0223201
5	STRAW WALKER DRIVE (4HB)	1	84057482	0301339
6	SHAKER SHOE AND TAILINGS ELEVATOR DRIVE, WITH SLOPE COMPENSATION	1	84057874	0102250
7	TAILINGS ELEVATORS, BOTTOM AUGER (RIGHT HAND)	2	84058339	0101087
8	SHAKER SHOE DRIVE, FIXED SHOE, WITHOUT SLOPE COMPENSATION	1	84432785	0202235
9	TAILINGS ELEVATOR DRIVE, FIXED SHOE, WITHOUT SLOPE COMPENSATION	1	84435035	1123301
10	FAN VARI-DRIVE FOR SELF-LEVELLING ONLY	1	84817627	0303144
10	FAN VARI-DRIVE FOR FIXED SHOE ONLY	1	919739	0303147
11	DRIVE, ROTARY SCREEN AND FAN (BSN C599)	1	84057085	0100272
11	DRIVE, ROTARY SCREEN AND FAN (ASN D600)	1	87664428	0300267

CX 8080 (CONTINUED)

			OE	
12	ALTERNATOR, WATERPUMP AND AIR	1	84057710	0385354
13	MAIN DRIVE (BSN C723)	1	84057914	1425268
13	MAIN DRIVE (ASN D724)	1	84175582	1425268
14	ROTARY SCREEN AND FAN	2	84061465	1472251
15	ROTOR AND VENTILATOR DRIVE	2	89835816	0172253
18	HEADER DRIVE	1	84061279	0724325 EE-TECH
19	STRAW ELEVATOR	1	84334995	0325607
20	STRAW WALKER DRIVE (2HB)	1	84434295	1123301
21	STRAW WALKER DRIVE (2HB)	1	84434260	1423476
22	DRUM VARIATOR	1	84035748	0353283
23	BEATER DRIVE	1	84045256	1902204
24	ROTARY SEPARATOR DRIVE AND SHAFT	1	84457079	0223204
25	DRUM DRIVE WITHOUT REDUCTOR	1	84061615	1624328
28	UNLOADING AUGER	1	84061293	0323282
29	GRAIN ELEVATOR , DRIVE	1	84073457	0301147

CX 8090

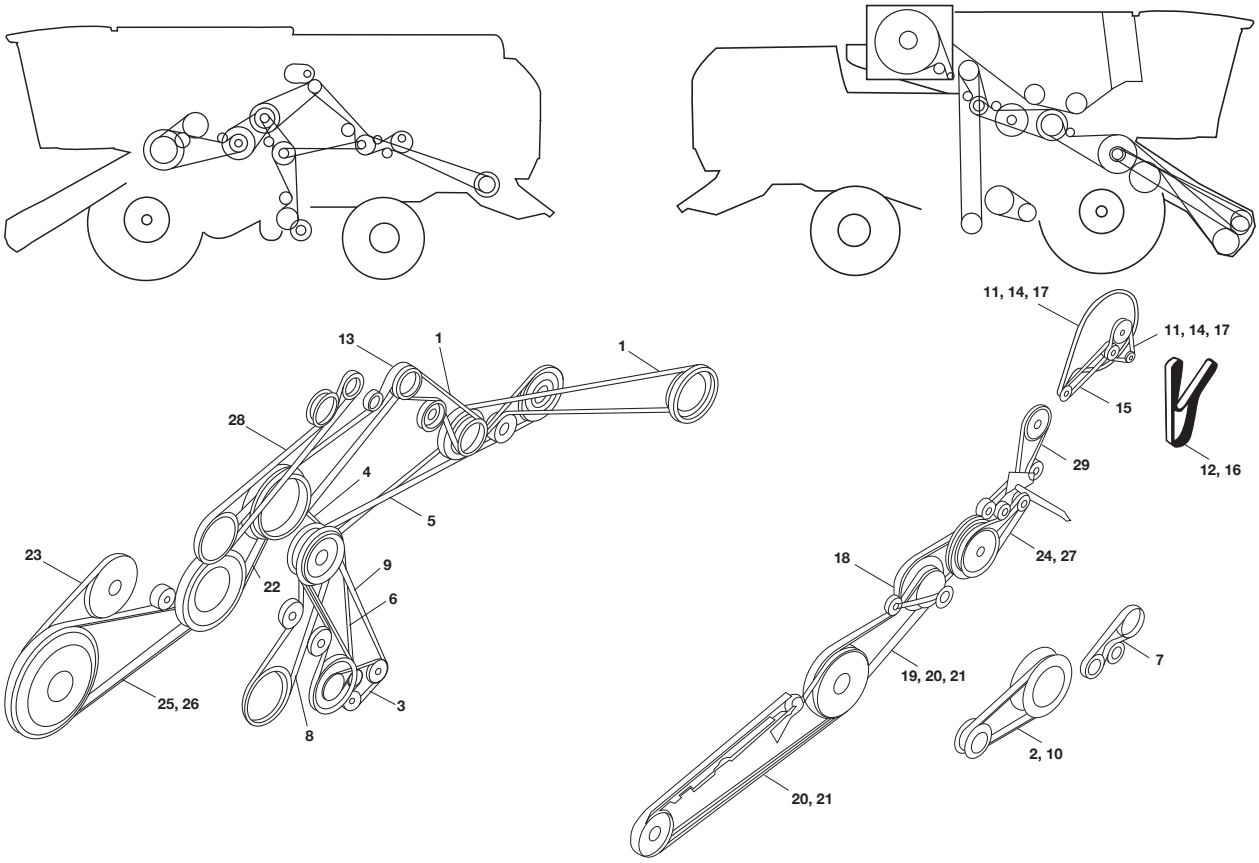

			OE	Gates
1A	CHOPPER DRIVE (BSN C723)	1	84075345	1423286
1A	CHOPPER DRIVE (ASN D724)	1	84175581	0323285
1B	CHOPPER DRIVE (FOR RUSSIA ONLY)	1	84075635	0223404 EE-TECH
1B	CHOPPER DRIVE (BSN C723)	1	87339998	0323431
1B	CHOPPER DRIVE (ASN D724)	1	84175580	0323431
2	GRASS SEED EQUIPMENT, ACCESSORY, FOR SELF-LEVELLING ONLY	1	84023277	0303117
2	GRASS SEED EQUIPMENT, ACCESSORY, FOR FIXED SHOE ONLY	1	84023278	0360230
3	SHAKER SHOE DRIVE - SELF-LEVELLING	2	84056913	1201153
4	INTERMEDIATE SHAFT FOR CLEANING DRIVE, WITH SLOPE COMPENSATION	1	84057392	0223201
5	STRAW WALKER DRIVE (4HB)	1	84057482	0301339
6	SHAKER SHOE AND TAILINGS ELEVATOR DRIVE, WITH SLOPE COMPENSATION	1	84057874	0102250
7	TAILINGS ELEVATORS, BOTTOM AUGER (RIGHT HAND)	2	84058339	0101087
8	SHAKER SHOE DRIVE, FIXED SHOE, WITHOUT SLOPE COMPENSATION	1	84432785	0202235
9	TAILINGS ELEVATOR DRIVE, FIXED SHOE, WITHOUT SLOPE COMPENSATION	1	84435035	1123301
10	FAN VARI-DRIVE FOR SELF-LEVELLING ONLY	1	84817627	0303144
10	FAN VARI-DRIVE FOR FIXED SHOE ONLY	1	919739	0303147
11	DRIVE, ROTARY SCREEN AND FAN (BSN C599)	1	84057085	0100272
11	DRIVE, ROTARY SCREEN AND FAN (ASN D600)	1	87664428	0300267

CX 8090 (CONTINUED)

			OE	
12	ALTERNATOR, WATERPUMP AND AIR	1	84057710	0385354
13	MAIN DRIVE (BSN C723)	1	84057914	1425268
13	MAIN DRIVE (ASN D724)	1	84175582	1425268
14	ROTARY SCREEN AND FAN	2	84061465	1472251
15	ROTARY SCREEN AND FAN	2	84459056	0372257
18	HEADER DRIVE	1	84061279	0724325 EE-TECH
19	STRAW ELEVATOR	1	84334995	0325607
20	STRAW WALKER DRIVE (2HB)	1	84434295	1123301
21	STRAW WALKER DRIVE (2HB)	1	84434260	1423476
22	DRUM VARIATOR	1	87635650	0393650
23	BEATER DRIVE	1	84045256	1902204
24	ROTARY SEPARATOR DRIVE AND SHAFT	1	84457079	0223204
25	DRUM DRIVE WITHOUT REDUCTOR	1	84061615	1624328
28	UNLOADING AUGER	1	84061293	0323282
29	GRAIN ELEVATOR , DRIVE	1	84073457	0301147

FR 500

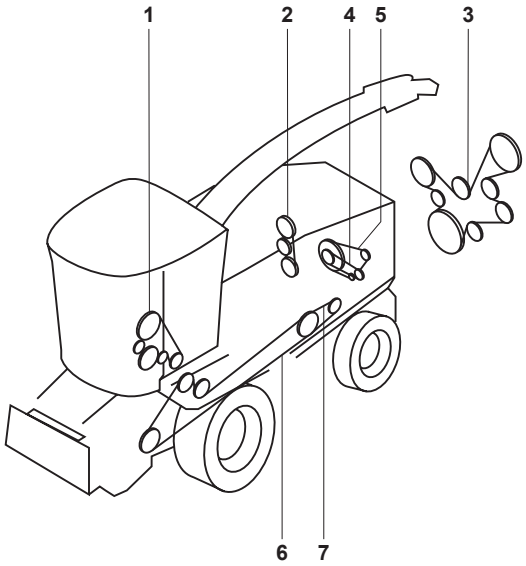

			OE	
1	CROP PROCESSOR DRIVE	1	84296393	☎
1	CROP PROCESSOR DRIVE - FOR CP200 ONLY	1	84459680	0370333
1	CROP PROCESSOR DRIVE	1	84449861	1499396
2	FAN DRIVE (FR500E3, FR500E4, FR500A3, FR500A4)	1	87346514	0387290
4	CRANKSHAFT, AC COMPRESSOR DRIVE (FR500E3, FR500E4, FR500A3, FR500A4 - "FOR ENGINE MODELS F3B E0684J*E919 - F3B FE613E*A011 - F3C E0684E*E920")	1	84223612	0187250
4	CRANKSHAFT, AC COMPRESSOR DRIVE	1	87604563	☎
5	CRANKSHAFT, ALTERNATOR (FR500E3, FR500E4, FR500A3, FR500A4)	1	84223612	0187250
5	CRANKSHAFT, ALTERNATOR DRIVE	1	87346859	0372272
6	CHOPPER DRIVE (FR500E3, FR500A3, FR500E4, FR500A4)	1	84458482	0374755
7	REVERSE DRIVE MECHANISM	1	84452723	1401194

FR 700

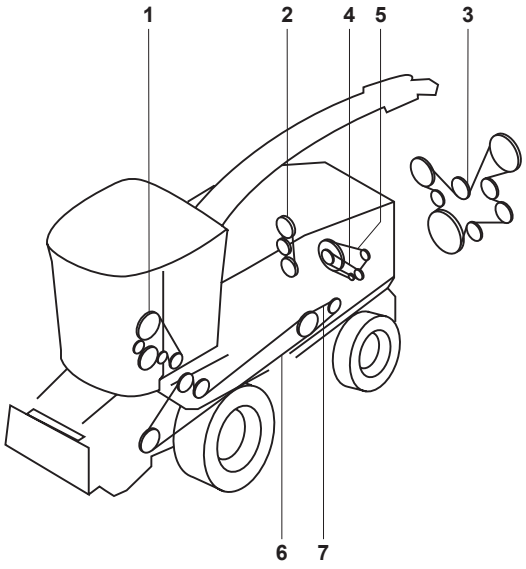

			OE	
1	CROP PROCESSOR DRIVE	1	84296393	☎
1	CROP PROCESSOR DRIVE - FOR CP200 ONLY	1	84459680	0370333
1	CROP PROCESSOR DRIVE	1	84449861	1499396
2	FAN DRIVE (FR700E3, FR700A3)	1	87346514	0387290
4	CRANKSHAFT, AC COMPRESSOR DRIVE (FR700E3, FR700A3)	1	9501863	0372232
4	CRANKSHAFT, AC COMPRESSOR DRIVE	1	87604563	☎
5	CRANKSHAFT, ALTERNATOR DRIVE	1	87346859	0372272
6	CHOPPER DRIVE (FR700E3, FR700A3)	1	84457069	0399809
7	REVERSE DRIVE MECHANISM	1	84452723	1401194

FR 850

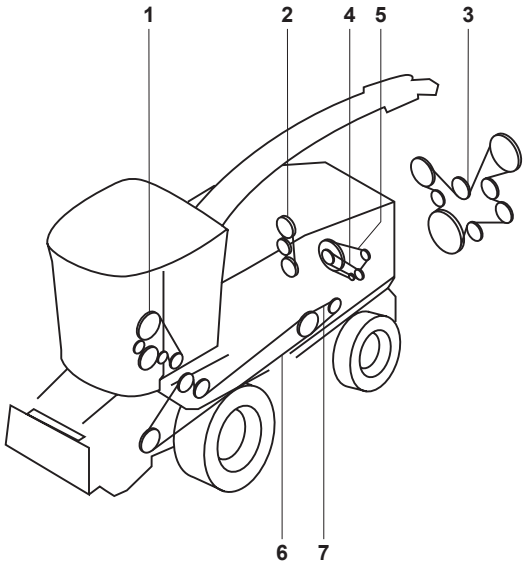

			OE	
1	CROP PROCESSOR DRIVE	1	84296393	☎
1	CROP PROCESSOR DRIVE - FOR CP200 ONLY	1	84459680	0370333
1	CROP PROCESSOR DRIVE	1	84449861	1499396
2	FAN DRIVE (FR850E2, FR850A2)	1	87346514	0387290
4	CRANKSHAFT, AC COMPRESSOR DRIVE	1	87604563	☎
5	CRANKSHAFT, ALTERNATOR DRIVE	1	87346859	0372272
5	CRANKSHAFT, ALTERNATOR DRIVE (FR850E2, FR850A2)	1	87618427	0384253
6	CHOPPER DRIVE (FR850E2, FR850A2)	1	84457069	0399809
7	REVERSE DRIVE MECHANISM	1	84452723	1401194

FR 950

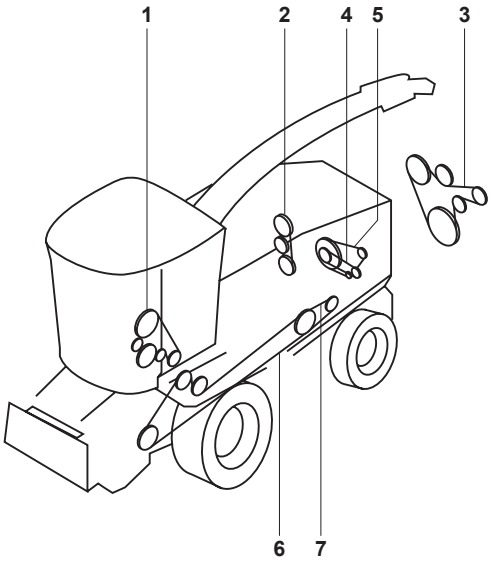

			OE	
1	CROP PROCESSOR DRIVE (SERIAL RANGE: ...-C731)	1	84449861	1499396
1	CROP PROCESSOR DRIVE (START SERIAL: D732)	1	84296393	☎
1	CROP PROCESSOR DRIVE - FOR CP200 ONLY	1	84459680	0370333
1	CROP PROCESSOR DRIVE - FOR CP250 ONLY	1	84449861	1499396
4	COMPRESSOR DRIVE (SERIAL RANGE: ...-C719)	1	84818008	0342161
4	CRANKSHAFT, ALTERNATOR	1	84818008	0342161
4	AIR CONDITIONER COMPRESSOR DRIVE	1	9501863	0372232
4	AIR CONDITIONER COMPRESSOR DRIVE	1	87604563	☎
7	REVERSE DRIVE MECHANISM	1	84452723	1401194

FR SERIES

			OE	
1	MAIN DRIVE (FR450E3, FR450A3, FR450E4, FR450A4, FR500E3, FR500A3)	1	84458482	0374755
1	MAIN DRIVE (FR500E4, FR500A4, FR600E3, FR600A3)	1	84458482	0374755
1	MAIN DRIVE (FR9040, FR9050, FR9060)	1	84458482	0374755
1	MAIN DRIVE (FR700E3, FR700A3, FR850E2, FR850A2)	1	84457069	0399809
1	MAIN DRIVE (FR9080, FR9090)	1	84457069	0399809
2	REVERSER (FR450A3, FR450A4, FR500A3, FR500A4)	2	84452723	1401194
2	REVERSER (FR600A3, FR700A3, FR850A2)	2	84452723	1401194
2	REVERSER (FR9040, FR9050, FR9060, FR9080, FR9090)	2	84452723	1401194
3	CROP PROCESSOR (CP200 ONLY) (FR450A3, FR450A4, FR500A3, FR500A4)	1	84459680	0370333
3	CROP PROCESSOR (CP200 ONLY) (FR600A3, FR700A3, FR850A2)	1	84459680	0370333
3	CROP PROCESSOR (CP250 22% & 30% ONLY) (FR450A3, FR450A4, FR500A3, FR500A4)	1	84296393	☎
3	CROP PROCESSOR (CP250 22% & 30% ONLY) (FR600A3, FR700A3, FR850A2)	1	84296393	☎
3	CROP PROCESSOR (CP250 50% ONLY) (FR450A3, FR450A4, FR500A3, FR500A4)	1	84449861	1499396
3	CROP PROCESSOR (CP250 50% ONLY) (FR600A3, FR700A3, FR850A2)	1	84449861	1499396
3	CROP PROCESSOR (CP200 ONLY) (FR9040, FR9050, FR9060, FR9080, FR9090)	1	84459680	0370333
3	CROP PROCESSOR (CP250 22% ONLY) (FR9040, FR9050, FR9060, FR9080, FR9090 (S/N -C732))	1	84449861	1499396
3	CROP PROCESSOR (CP250 22% ONLY) (FR9040, FR9050, FR9060, FR9080, FR9090 (S/N D732-))	1	84296393	☎
4	FAN DRIVE (FR450E3, FR450E4, FR450A3, FR450A4)	1	84513766	0387298
4	FAN DRIVE (FR500E3, FR500E4, FR500A3, FR500A4, FR600E3, FR600A3)	1	87346514	0387290
4	FAN DRIVE (FR700E3, FR700A3, FR850E2, FR850A2)	1	87346514	0387290
4	FAN DRIVE (FR9040 (S/N -C720))	1	87393905	0323175
4	FAN DRIVE (FR9040 (S/N D720-))	1	87346514	0387290
4	FAN DRIVE (FR9050, FR9060, FR9080, FR9090)	1	87346514	0387290
5	ENGINE (FOR ENG MODELS F2C E9684U E026 & F2C FE613A A023) (FR450E3, FR450E4, FR450A3, FR450A4)	1	84292639	0285346
5	ENGINE (FOR ENG MODEL F3A E0684N E907) (FR9040)	1	500380059	0342200
5	ENGINE (FOR ENG MODEL F2C E9684U E151) (FR9040)	1	500371653	0386283
5	ENGINE (FOR ENG MODEL F3B E0684J E902) (FR9050, FR9060)	1	504049425	0385295
5	ENGINE (FOR ENG MODEL F3C E0684A E001) (FR9050, FR9060)	1	504049425	0385295
5	ENGINE (FOR ENG MODEL F3C E0684F E001) (FR9050, FR9060)	1	504049425	0385295
6	ALTERNATOR (FOR ENG MODELS F3B E0684J E919) (FR500E3, FR500E4, FR500A3, FR500A4, FR600E3, FR600A3)	1	84223612	0187250
6	ALTERNATOR (FOR ENG MODELS F3B FE613E A011) (FR500E3, FR500E4, FR500A3, FR500A4, FR600E3, FR600A3)	1	84223612	0187250
6	ALTERNATOR (FOR ENG MODELS F3C E0684E E920) (FR500E3, FR500E4, FR500A3, FR500A4, FR600E3, FR600A3)	1	84223612	0187250
6	ALTERNATOR (FR700E3, FR700A3)	1	87346859	0372272
6	ALTERNATOR (FOR ENG MODEL FVA E2884X B200) (FR850E2, FR850A2)	1	87618427	0384253
6	ALTERNATOR (FR9080)	1	87346859	0372272
6	ALTERNATOR (FR9090)	1	87618427	0384253
7	COMPRESSOR DRIVE (FOR ENG MODELS F3B E0684J E919) (FR500E3, FR500E4, FR500A3, FR500A4, FR600E3, FR600A3)	1	84223612	0187250
7	COMPRESSOR DRIVE (FOR ENG MODELS F3B FE613E A011) (FR500E3, FR500E4, FR500A3, FR500A4, FR600E3, FR600A3)	1	84223612	0187250
7	COMPRESSOR DRIVE (FOR ENG MODELS F3C E0684E E920) (FR500E3, FR500E4, FR500A3, FR500A4, FR600E3, FR600A3	1	84223612	0187250
7	COMPRESSOR DRIVE (FR700E3, FR700A3)	1	9501863	0372232
7	COMPRESSOR DRIVE (FOR ENG MODEL FVA E2884X B200) (FR850E2, FR850A2)	1	87604563	☎
7	COMPRESSOR DRIVE (FR9040 (S/N -C720), FR9050, FR9060)	1	84818008	0342161
7	COMPRESSOR DRIVE (FOR ENG MODEL F2C E9684U E151) (FR9040 (S/N D720-), FR9050, FR9060)	1	504145203	0342160
7	COMPRESSOR DRIVE (FR9080)	1	9501863	0372232
7	COMPRESSOR DRIVE (FR9090)	1	87604563	☎

FX 28

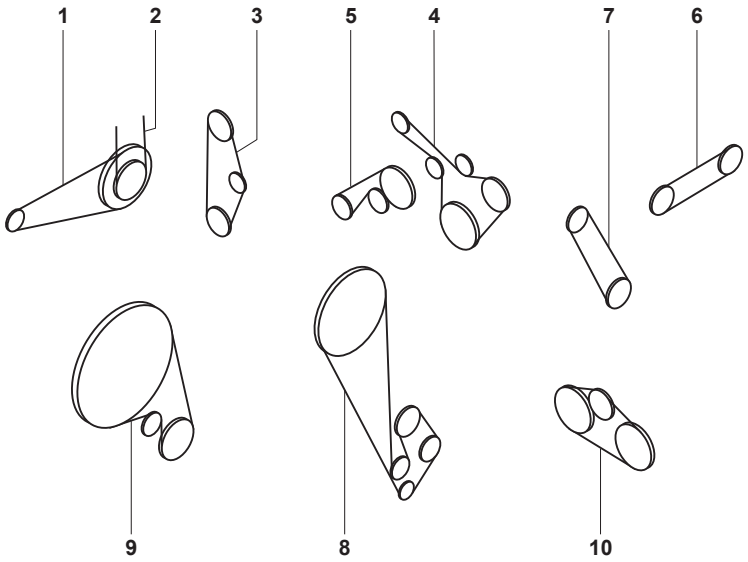

			OE	
1	ALTERNATOR DRIVE (SERIAL RANGE ...-C217 - FX28, FX28 NA)	1	84022807	0372275
2	FAN DRIVE, (SERIAL RANGE ...-C217 - FX28, FX28 NA)	1	84043106	1401175
3	FAN DRIVE, START (SERIAL RANGE D218 - FX28, FX28 NA)	1	84073615	0101184
4	ENGINE, CRANKCASE - WATERPUMP - ALTERNATOR DRIVE (START SERIAL: D218 - FX28, FX28 NA - ENGINE MODEL F3A E0684E*B002)	1	500380059	0342200
5	ENGINE, AIRCO COMPRESSOR DRIVE (START SERIAL: D218 - FX28, FX28 NA)	1	504020489	0342160
6	AIRCO COMPRESSOR DRIVE (FX28, FX28 NA)	1	89835815	0372242
8	CROP PROCESSOR	1	84026761	0300223
8	CROP PROCESSOR (SERIAL RANGE: -C201)	1	84074137	0370357
8	CROP PROCESSOR (START SERIAL: D202)	1	84435248	0170353
9	START SERIAL: D186	1	84054417	0369268
10	CHOPPER BODY - MAIN DRIVE (SERIAL RANGE: -C127)	1	84074273	1437231
10	CHOPPER BODY - MAIN DRIVE (START SERIAL: D128 - FX28 NA)	1	84074273	1437231
10	CHOPPER BODY - MAIN DRIVE	1	84036579	0357261

FX 38

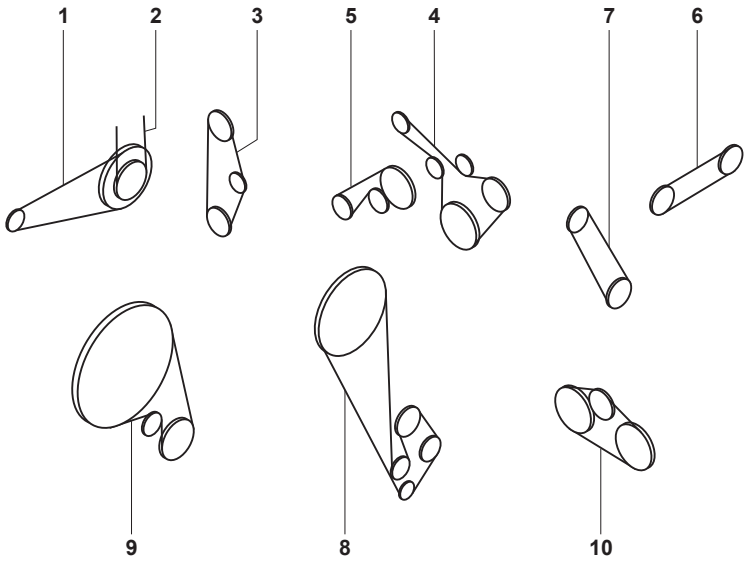

			OE	
1	ALTERNATOR DRIVE (SERIAL RANGE: -C217 - FX38, FX38 NA)	1	84022807	0372275
2	FAN DRIVE (SERIAL RANGE: -C217 - FX38, FX38 NA)	1	84043106	1401175
3	FAN DRIVE (START SERIAL: D218 - FX38, FX38 NA)	1	84073615	0101184
4	ENGINE, CRANKCASE - WATERPUMP - ALTERNATOR DRIVE (START SERIAL: D218 - FX38, FX38 NA - ENGINE MODELS F3B E0684A*B001 - F3B E0684E*B001)	1	504029021	0289299
5	ENGINE, AIRCO COMPRESSOR DRIVE (START SERIAL: D218 - FX38, FX38 NA)	1	504020489	0342160
6	AIRCO COMPRESSOR DRIVE - FX38, FX38 NA	1	89835815	0372242
8	CROP PROCESSOR	1	84026761	0300223
8	CROP PROCESSOR (SERIAL RANGE: -C201)	1	84074137	0370357
8	CROP PROCESSOR (START SERIAL: D202)	1	84435248	0170353
9	START SERIAL: D186	1	84054417	0369268
10	CHOPPER BODY - MAIN DRIVE (SERIAL RANGE: -C127)	1	84074273	1437231
10	CHOPPER BODY - MAIN DRIVE	1	84036579	0357261

FX 48

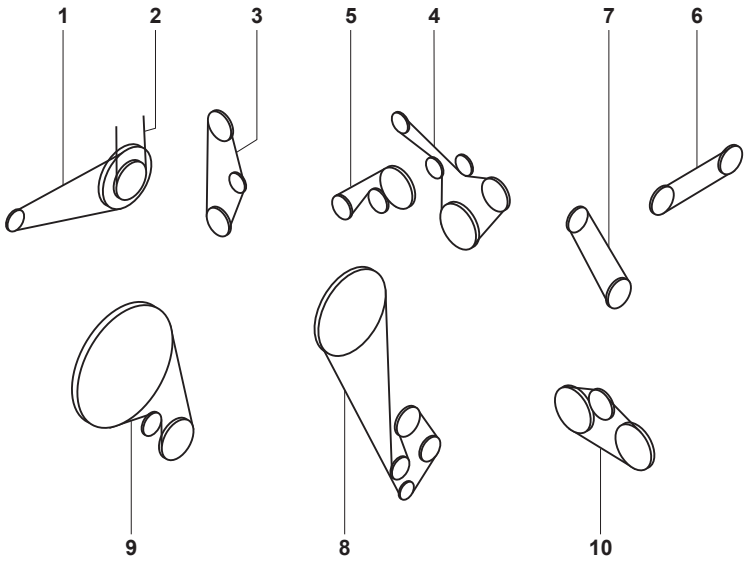

			OE	
1	ALTERNATOR DRIVE (SERIAL RANGE: -C217)	1	84022807	0372275
2	FAN DRIVE (SERIAL RANGE: -C217)	1	84043106	1401175
2	FAN DRIVE (SERIAL RANGE: -C217)	1	84057609	2001178
3	FAN DRIVE (START SERIAL: D218)	1	84073615	0101184
4	ENGINE, CRANKCASE - WATERPUMP - ALTERNATOR DRIVE (START SERIAL: D218 - ENGINE MODELS F3B E0684A*B001 - F3B E0684E*B001)	1	504029021	0289299
5	ENGINE, AIRCO COMPRESSOR DRIVE (START SERIAL: D218)	1	504020489	0342160
6	AIRCO COMPRESSOR DRIVE	1	89835815	0372242
8	CROP PROCESSOR	1	84026761	0300223
8	CROP PROCESSOR (SERIAL RANGE: -C201)	1	84074137	0370357
8	CROP PROCESSOR (START SERIAL: D202)	1	84435248	0170353
9	START SERIAL: D186	1	84054417	0369268
10	CHOPPER BODY - MAIN DRIVE (SERIAL RANGE: -C127)	1	84074273	1437231
10	CHOPPER BODY - MAIN DRIVE	1	84036579	0357261

FX 58

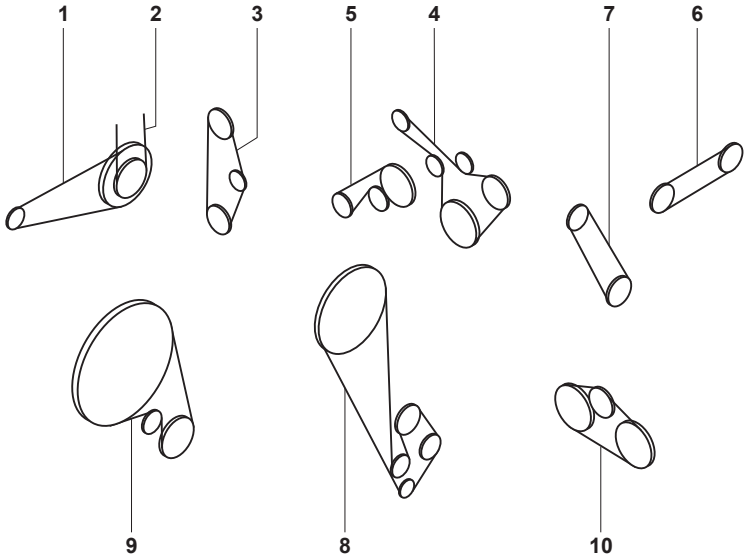

			OE	
1	ALTERNATOR DRIVE (FX58, FX58 NA)	1	432642	0372258
3	FAN DRIVE (FX58, FX58 NA)	1	84057609	2001178
7	AIRCO COMPRESSOR DRIVE (FX58, FX58 NA)	1	452023	0372262
8	CROP PROCESSOR	1	84026761	0300223
8	CROP PROCESSOR (SERIAL RANGE: -C201)	1	84074137	0370357
8	CROP PROCESSOR (START SERIAL: D202)	1	84435248	0170353
9	START SERIAL: D186	1	84054417	0369268
10	CHOPPER BODY - MAIN DRIVE (SERIAL RANGE: -C127)	1	84074273	1437231
10	CHOPPER BODY - MAIN DRIVE	1	84036579	0357261

NEW HOLLAND

FX SERIES

			OE	Gates
1	CROP PROCESSOR (RIGTH HAND) 1 FX30, FX40, FX50, FX60	1	84449048	0170261
2	CROP PRO PLUS (RIGTH HAND) (FX30-FX40-FX50-FX60) (FOR U.K. ONLY)	1	84449232	0399319
2	CROP PRO PLUS (RIGTH HAND) (FX30-FX40-FX50-FX60) (PRIOR TO S/N C426, FOR NA ONLY)	1	84449233	0399312
2	CROP PRO PLUS (RIGTH HAND) (FX30-FX40-FX50-FX60) (S/N D426 & ABOVE, FOR NA ONLY)	6	87531466	0317149
3	CROP PRO PLUS (LEFT HAND) (FX28-FX38-FX48-FX58) (S/N D186 & ABOVE)	1	84054417	0369268
3	CROP PRO PLUS HYDRO DRIVE (LEFT HAND) (FX30-FX40-FX50-FX60) (PRIOR TO S/N C323)	1	84054417	0369268
3	CROP PRO PLUS HYDRO DRIVE (LEFT HAND) (FX30-FX40-FX50-FX60) (S/N D323 & ABOVE)	1	84448759	0399324
4	CROP PROCESSOR (LEFT HAND) (FX28-FX38-FX48-FX58) (PRIOR TO S/N C202)	1	84074137	0370357
4	CROP PROCESSOR (LEFT HAND) (FX28-FX38-FX48-FX58) (S/N D202 & ABOVE)	1	84435248	0170353
4	CROP PROCESSOR (LEFT HAND) (FX30, FX40, FX50, FX60)	1	84435248	0170353
4	CROP PROCESSOR (LEFT HAND) (FX25, FX28, FX30, FX38, FX40)	4	84026761	0300223
4	CROP PROCESSOR (LEFT HAND) (FX45, FX48, FX50, FX58, FX60)	4	84026761	0300223
5	MAIN DRIVE (FX28, FX30, FX38, FX40, FX48, FX50, FX58, FX60)	8	84074273	1437231
5	MAIN DRIVE (FX25, FX45)	2	84017742	0357271
5	MAIN DRIVE (900 RPM KIT) (FX25, FX45)	2	84036579	0357261
5	MAIN DRIVE (FX28, FX38, FX48, FX58, FX60)	2	84036579	0357261
6	ALTERNATOR DRIVE (FX25, FX45)	1	84022807	0372275
6	ALTERNATOR DRIVE (FX25, FX45)	2	84043106	1401175
6	ALTERNATOR DRIVE (FX28, FX38, FX48)	1	84022807	0372275
6	ALTERNATOR DRIVE (FX58, FX60)	1	432642	0372258
7	FAN DRIVE (FX28, FX38, FX48)	2	84043106	1401175
7	FAN DRIVE (FX48) (GERMANY ONLY PRIOR TO S/N C218)	1	84057609	2001178
7	FAN DRIVE (FX60) (PRIOR TO S/N C370)	2	84073615	0101184
7	FAN DRIVE (FX60) (S/N D370 & ABOVE)	1	84057609	2001178
8	ENGINE BELT (FX28, FX38, FX48)	2	84073615	0101184
8	ENGINE BELT (FX58)	1	84057609	2001178
8	ENGINE BELT (FX30, FX40, FX50) (PRIOR TO S/N C370)	2	84073615	0101184
8	ENGINE BELT (FX40, FX50) (S/N D470 & ABOVE)	1	84057609	2001178
9	ALTERNATOR, IVECO (FOR ENG MODEL F3A E0684E B002) (FX28, FX30, FX40, FX50, FX60)	1	500380059	0342200
9	ALTERNATOR DRIVE (IVECO FOR ENG MODEL F3A E0684E B006) (FX30, FX40, FX50, FX60)	1	500380059	0342200
9	ALTERNATOR DRIVE (IVECO FOR ENG MODEL F3A E0684A B001) (FX30, FX40, FX50, FX60)	1	504029021	0289299
9	ALTERNATOR DRIVE (IVECO FOR ENG MODEL F3B E0684A B001) (FX30, FX38, FX40, FX48, FX50, FX60)	1	504029021	0289299
9	ALTERNATOR DRIVE (IVECO FOR ENG MODEL F3B E0684E B001) (FX38, FX48)	1	504029021	0289299
9	ALTERNATOR DRIVE (IVECO FOR ENG MODEL F3B E0684A B002) (FX30, FX40, FX50, FX60)	1	504029021	0289299
9	ALTERNATOR DRIVE (IVECO FOR ENG MODEL F3B E0684A B003) (FX30, FX40, FX50, FX60)	1	504029021	0289299
10	COMPRESSOR (FX28, FX30, FX38, FX40, FX48, FX50, FX60)	1	504020489	0342160
11	COMPRESSOR (FX25, FX28, FX38, FX45, FX48)	1	89835815	0372242
11	COMPRESSOR (FX30, FX40, FX50)	1	84818008	0342161
12	COMPRESSOR (FX58, FX60)	2	452023	0372262

FX 300 - FX 375 - FX 450

			OE	
1	MAIN DRIVE	2	84017742	0357271
2	CROP PROCESSOR	4	84026761	0300223
3	FAN DRIVE	2	84012975	0372307
4	ALTERNATOR DRIVE	1	84022807	0372275
5	COMPRESSOR DRIVE	1	89835815	0372242
5	COMPRESSOR DRIVE	1	80747177	0272247

M 80

			OE	
1	HYDRAULIC PUMP DRIVE	1	80230043	0401111
2	TAILINGS ELEVATOR DRIVE	1	80230046	0301183
3	DISCHARGE AUGER SHAFT	1	80230048	0101222
4	REEL DRIVE INTERMEDIATE	1	80230051	0302098
5	STRAW ELEVATOR DRIVE	1	80230059	0102216
6	REEL DRIVE	1	80230060	0202235
7	STICKLE KNIFE DRIVE	1	80230060	0202235
8	DRIVE GRAIN TANK	1	80230061	0202268
9	STRAW BEATER	1	80230267	1402547
10	GROUND SPEED DRIVE	1	80230074	0330331
11	FAN DRIVE	1	80230074	0330331
12	GROUND SPEED VARIATOR DRIVE	1	80230075	1511156
13	BEATER DRIVE	1	80230079	0381384
14	FORD ENGINE	1	80230037	0172219
14	DEUTZ ENGINE	1	80230127	0372232
14	FORD ENGINE	1	80230131	0172221
15	DEUTZ ENGINE	1	80230038	0172219
16	AUGER DRIVE GRAIN TANK	1	80230042	1401081
17	FAN DRIVE	1	80230044	2101138
18	ELEVATOR DRIVE UNIT	1	80230046	0301183
19	UNLOADING SYSTEM	1	80230053	0302124
20	CYLINDER	1	80230078	0213186

M 89

			OE	
1	HYDRAULIC PUMP DRIVE	1	80230043	0401111
2	REEL DRIVE INTERMEDIATE SHAFT (UPPER)	1	80230051	0302098
3	STRAW ELEVATOR DRIVE	1	80230059	0102216
4	REEL DRIVE	1	80230060	0202235
5	STICKLE KNIFE DRIVE	1	80230060	0202235
6	DRIVE GRAIN TANK	1	80230061	0202268
7	FAN DRIVE	1	80230074	0330331
8	GROUND SPEED DRIVE	1	80230075	1511156
9	BEATER DRIVE	1	80230079	0381384
10	TAILINGS ELEVATOR DRIVE	1	80230046	0301183
11	ALTERNATOR DRIVE	1	80230038	0172219
12	AUGER DRIVE GRAIN TANK	1	80230042	1401081
13	FAN DRIVE	1	80230044	2101138
14	ELEVATOR DRIVE UNIT	1	80230046	0301183
15	UNLOADING SYSTEM	1	80230053	0302124
16	CYLINDER	1	80230078	0213186
17	FAN DRIVE	1	80230127	0372232
17	FAN DRIVE	1	80230131	0172221

M 103

			OE	
1	THRESHING DRUM VARIATOR DRIVE	1	80230078	0213186
3	BEATER DRIVE	1	80230080	0381385
4	STRAW WALKER DRIVE	1	80230064	0202361
5	TAILINGS ELEVATOR DRIVE	1	80230054	0402131
6	STRAW ELEVATOR DRIVE	1	80230073	0330293
7	STICKLE KNIFE DRIVE	1	80230074	0330331
8	REEL DRIVE INTERMEDIATE SHAFT - (LOWER)	1	80230057	0302179
9	REEL DRIVE INTERMEDIATE SHAFT (UPPER)	1	80230052	1902102
10	REEL DRIVE	1	80230060	0202235
11	HYDRAULIC PUMP DRIVE	1	80230043	0401111
12	ENGINE FAN DRIVE (PERKINS ENGINE)	1	80230051	0302098
12	ENGINE FAN DRIVE (FORD ENGINE)	1	80230037	0172219
12	ENGINE COOLING BLOWER DRIVE (DEUTZ ENGINE)	1	80230127	0372232
13	ALTERNATOR DRIVE (DEUTZ ENGINE)	1	80230038	0172219
14	TAILINGS ELEVATOR RETURN	1	80230042	1401081
15	STRAW SPREADER DRIVE	1	80230049	1201291
15	STRAW SPREADER DRIVE / TYPE 9501 M	1	80230050	1401306
16	STRAW PRESS DRIVE	1	80230069	1602631
16	STRAW PRESS DRIVE	1	80230070	0102663
16	STRAW PRESS DRIVE	1	80230071	0302803
17	DISCHARGE AUGER SHAFT	1	80230053	0302124
18	POWER STEERING	1	80230151	1601103
18	POWER STEERING	1	80230043	0401111
19	STRAW CHOPPER DRIVE	1	80230068	1402587
20	CHOFF BLOWER DRIVE	1	80230066	0102489
21	THRESHING DRUM DRIVE (MAIZE)	1	80230056	0402155
22	REEL DRIVE (MAIZE)	1	80230065	0302428
23	REEL DRIVE (MAIZE)	1	80230063	1902351
24	CHOFF BLOWER DRIVE	1	80230048	0101222
24	CHOFF BLOWER DRIVE	1	80230154	0101245
25	AUGER DRIVE GRAIN TANK	1	80230041	2601079
26	AUGER DRIVE GRAIN TANK	2	80230045	0301147
27	DIVIDING ROLLER	1	80230062	0302313
28	FAN WHEEL DRIVE	1	80230040	0301375

NEW HOLLAND

M 122

			OE	
1	HYDRAULIC PUMP DRIVE	1	80230043	0401111
2	TAILINGS ELEVATOR DRIVE	1	80230046	0301183
3	STRAW ELEVATOR DRIVE	1	80230059	0102216
4	DRIVE GRAIN TANK	1	80230061	0202268
5	REEL DRIVE	1	80230061	0202268
6	BEATER DRIVE	1	80230079	0381384
7	REEL DRIVE	1	80230101	0110126
8	SICKLE KNIFE DRIVE	1	80309087	0330351
9	TRACTION DRIVE	1	80326954	0311169
10	TRACTION DRIVE	1	80328424	0330336
11	ELEVATOR DRIVE UNIT	1	80230046	0301183
12	CYLINDER	1	80230078	0213186
13	UNLOADING SYSTEM	1	80326298	0102129
14	FAN DRIVE	1	80330204	1901133
15	DEUTZ ENGINE	1	80327040	0173231
16	DEUTZ ENGINE	1	80327041	0273217
17	FORD ENGINE	1	80327062	0172225

M 133 - M 135 - M 140

			OE	
1	HYDRAULIC PUMP DRIVE	1	80230043	0401111
2	REEL DRIVE ECCENTRIC	1	80230060	0202235
3	REEL DRIVE	1	80230061	0202268
4	STRAW ELEVATOR DRIVE	1	80230073	0330293
6	BEATER DRIVE	1	80230080	0381385
7	SICKLE KNIFE DRIVE	1	80309087	0330351
7	CUTTING TABLE DRIVE	1	80230074	0330331
8	REEL DRIVE VARIABLE SPEED	1	80230101	0110126
9	STRAW FUNNEL	1	80309364	1602150
10	ROTARY SCREEN DRIVE	1	80230041	2601079
11	FAN DRIVE VARIABLE SPEED	1	80230056	0402155
12	TAILINGS ELEVATOR DRIVE	1	80230057	0302179
12	ELEVATOR DRIVE GRAIN	1	80230059	0102216
13	ELEVATOR DRIVE UNIT	1	80230059	0102216
14	CYLINDER	1	80230078	0213186
16	DISCHARGE AUGER SHAFT	1	80230103	0330188
17	STRAW WALKER DRIVE	1	80230108	1601218
18	FAN DRIVE	1	80327024	0173234
18	FAN DRIVE	1	80336386	1573238
19	ALTERNATOR DRIVE	1	80327041	0273217
19	ALTERNATOR DRIVE	1	80336426	0373221

SWATHER 1112 - 1114

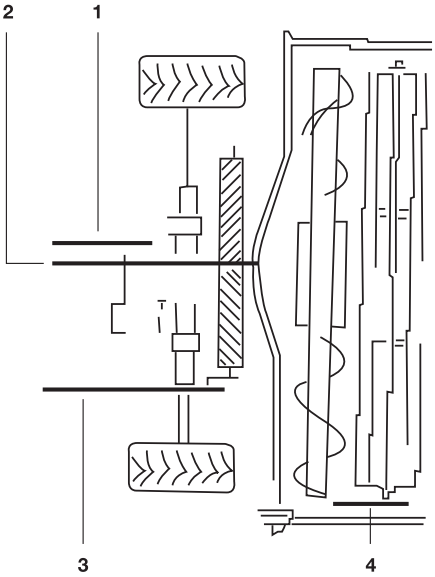

			OE	
1	JACKSHAFT 3 BAND	1	189130	0324184
2	HEADER DRIVE	1	182381	1601185
3	CONDITIONING DRIVE 4 BAND	1	186623	1425303
4	REEL DRIVE	1	137695	0702212
1	HEADER CLUTCH 3 GROOVE	1	189131	0324211
2	HEADER 2 GROOVE	1	643307	0323225 EE-TECH
3	CONDITIONING DRIVE	1	625241	0325301 EE-TECH
4	REEL DRIVE	1	189130	0324184

SWATHER 2450 - 2550

			OE	
1	SICKLE DRIVE AND AUGER	1	703747	0202187
2	CONDITIONING DRIVE	1	131725	0302197

TC 52 - TC 54 - TC 56

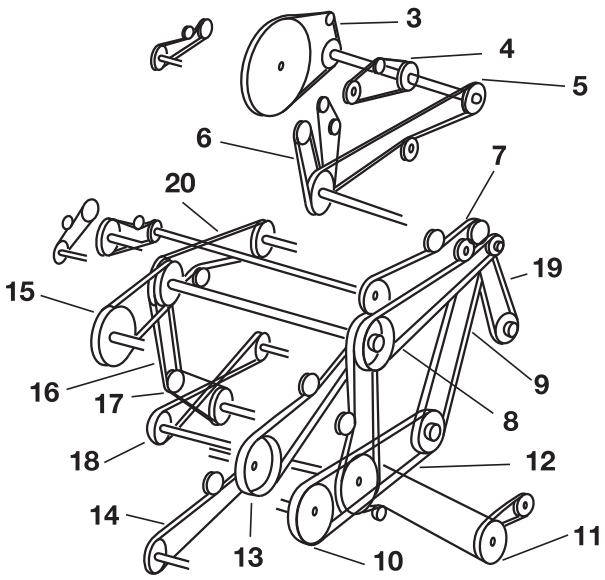

			OE	
0	WATER PUMP - ALTERNATOR - ENG. (WO AIR CO)	1	84005860	0384324
3	ROTARY DUST SCREEN	1	89514310	0300202
4	RADIATOR FAN (FOR TC52 ONLY)	1	89831515	0172253
4	RADIATOR FAN (FOR TC54-56 ONLY)	1	89818704	0372255
5	ENGINE	1	89818705	0372271
7	INTERMEDIATE SHAFT - ENGINE	1	89838606	0102216
8	BEATERSHAFT - MAIN DRIVE	1	89817374	1524314 EE-TECH
11	GRAIN AUGER	1	80422731	0302248
12	BEATER SHAFT - ECCENTRIC SHAFT	1	80387469	0302251
13	STRAW ELEVATOR - BEATER SHAFT	1	80066232	2602244
13	STRAW ELEVATOR - BEATER SHAFT	1	80424563	0327292
14	HEADER DRIVER (CODE 0209) TC56	1	89817487	2002323
14	HEADER DRIVER (CODE 0212) TC52-54	1	89817487	2002323
14	HEADER DRIVER (CODE 0212) TC 52-54	1	89817488	0327376
14	HEADER DRIVER (CODE 0209) TC56	1	89817488	0327376
14	HEADER DRIVER (CODE 1000) F.L. CONV. TC56	1	89835120	0327381
14	HEADER DRIVER (CODE 1300) F.L. CONV. TC52-54	1	89835120	0327381
14	HEADER DRIVER (CODE 1000) F.L. CONV. TC56	1	89839375	0202332
14	HEADER DRIVER (CODE 1300) F.L. CONV. TC52-54	1	89839375	0202332
15	DRUM - BEATER SHAFT	1	80336784	0313181
16	BEATER SHAFT	1	89515075	0310193
17	FAN	1	89515076	0310157
18	STRAW WALKERS - ECCENTRIC SHAFT	1	80431784	0301217
19	HYDROSTATIC PUMP (CODE 0800)	1	89818873	0325248
20	ROTARY SEPARATOR (CODE 2300)	1	89837412	1602150

TC 57

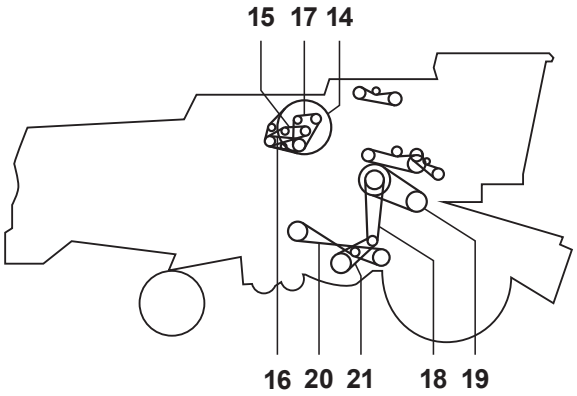

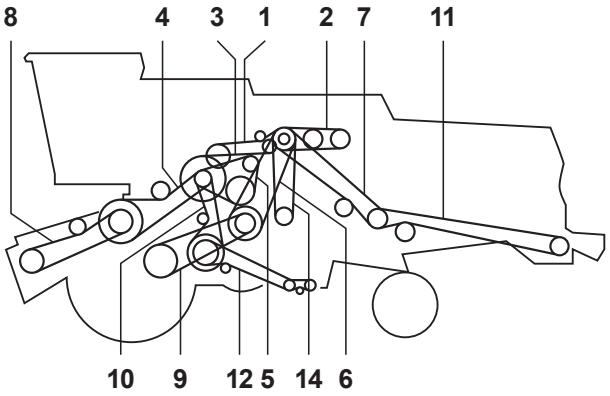

			OE	
1		1	84991836	0502215
1		1	89838606	0102216
2		1	80824182	1472264
3		1	80825117	1225316
4	STRAW ELEVATOR - BEATER SHAFT	1	80424563	0327292
5		1	80825013	0323183
6		1	84981849	0312267
7		1	80330715	0202275
8		2	9575153	0202300
9		1	84993224	2612258
9		1	84981849	0312267
10		1	80387469	0302251
11		1	80825399	1402436
12		1	80753053	0102257
12		1	80422731	0302248
13		1	84999531	0357308
14		1	80824176	0200204
15		1	80824518	0172253
15		1	84999647	0122155
16		1	80824175	0372271
17		1	89575059	0372242
17		1	89575059	0372242
18	BEATER SHAFT	1	89515075	0310193
19		1	87621086	0715188
20	STRAW WALKER - ECCENTRIC SHAFT	1	80431784	0301217
21	FAN DRIVE	1	89515076	0310157

TC 5040

			OE	
2	AIRCONDITIONING COMPRESSOR	1	99466947	0372232
3	DRIVE, ROTARY SCREEN AND FAN	1	84989965	1400235
4	AIR CONDITIONING FAN DRIVE	1	9818704	0372255
4	INTERMEDIATE SHAFT DRIVE	1	87535206	1472238
4	INTERMEDIATE SHAFT DRIVE (TC5040, TC5050, TC5060)	1	87535206	1472238
5	FEED TABLE CLUTCH	1	424563	0327292
6	CHOPPER DRIVE	1	87628477	1423320
6	CHOPPER DRIVE (TC5040, TC5050, TC5060, TC5070, TC5080)	1	87628478	1323464
6	CHOPPER DRIVE, FOR LOW RPM ONLY (TC5040, TC5050, TC5060, TC5070, TC5080)	1	84041094	0323472
6	CHOPPER DRIVE (TC 5080 HILLSIDE) (BSN C449)	1	87628478	1323464
7	UNLOADING AUGER DRIVE (BSN C493)	1	84448591	1402217
7	UNLOADING AUGER DRIVE (ASN D494)	1	84462590	0502215
8	HEADER DRIVE ENGAGING IDLER 3HB ONLY	1	89817374	1524314 EE-TECH
9	TRANSMISSION MECHANICAL TRACTION UPPER (BSN C513)	1	80356024	0312262
9	TRANSMISSION MECHANICAL TRACTION UPPER (ASN D514)	1	9850782	0312265
10	TRANSMISSION MECHANICAL TRACTION LOWER (BSN C513)	1	9850782	0312265
10	TRANSMISSION MECHANICAL TRACTION LOWER (ASN D514)	1	84993224	2612258
11	DRIVE GROUP FOR GRAIN AND TAILINGS ELEVATOR	1	80422731	0302248
12	ECCENTRIC SHAFT DRIVE	1	80387469	0302251
13-14	2HC DRIVE BESIDE STRAW ELEVATOR	1	84971217	0327386
15	DRUM VARIATOR DRIVE	1	336784	0313181
16	FAN VARIATOR DRIVE	1	9515075	0310193
17	FAN VARIATOR DRIVE	1	9515076	0310157
18	STRAW WALKER SHAFT	1	80431784	0301217
19	STRAW SPREADER	1	913524	1501398

TC 5050

			OE	
2	AIRCONDITIONING COMPRESSOR	1	99466947	0372232
3	DRIVE, ROTARY SCREEN AND FAN	1	84989965	1400235
4	AIR CONDITIONING FAN DRIVE	1	9818704	0372255
4	INTERMEDIATE SHAFT DRIVE	1	87535206	1472238
4	INTERMEDIATE SHAFT DRIVE (TC5040, TC5050, TC5060)	1	87535206	1472238
5	FEED TABLE CLUTCH	1	424563	0327292
6	CHOPPER DRIVE	1	87628477	1423320
6	CHOPPER DRIVE (TC5040, TC5050, TC5060, TC5070, TC5080)	1	87628478	1323464
6	CHOPPER DRIVE, FOR LOW RPM ONLY (TC5040, TC5050, TC5060, TC5070, TC5080)	1	84041094	0323472
7	UNLOADING AUGER DRIVE (BSN C493)	1	84448591	1402217
7	UNLOADING AUGER DRIVE (ASN D494)	1	84462590	0502215
8	HEADER DRIVE ENGAGING IDLER 3HB ONLY	1	89817374	1524314 EE-TECH
9	TRANSMISSION MECHANICAL TRACTION UPPER (BSN C513)	1	80356024	0312262
9	TRANSMISSION MECHANICAL TRACTION UPPER (ASN D514)	1	9850782	0312265
10	TRANSMISSION MECHANICAL TRACTION LOWER (BSN C513)	1	9850782	0312265
10	TRANSMISSION MECHANICAL TRACTION LOWER (ASN D514)	1	84993224	2612258
11	DRIVE GROUP FOR GRAIN AND TAILINGS ELEVATOR	1	80422731	0302248
12	ECCENTRIC SHAFT DRIVE	1	80387469	0302251
13-14	2HC DRIVE BESIDE STRAW ELEVATOR	1	84971217	0327386
15	DRUM VARIATOR DRIVE	1	336784	0313181
16	FAN VARIATOR DRIVE	1	9515075	0310193
17	FAN VARIATOR DRIVE	1	9515076	0310157
18	STRAW WALKER SHAFT	1	80431784	0301217
19	STRAW SPREADER	1	913524	1501398

TC 5060

			OE	
2	AIRCONDITIONING COMPRESSOR	1	99466947	0372232
3	DRIVE, ROTARY SCREEN AND FAN	1	84989965	1400235
4	AIR CONDITIONING FAN DRIVE	1	9818704	0372255
4	INTERMEDIATE SHAFT DRIVE	1	87535206	1472238
4	INTERMEDIATE SHAFT DRIVE (TC5040, TC5050, TC5060)	1	87535206	1472238
5	FEED TABLE CLUTCH	1	424563	0327292
6	CHOPPER DRIVE	1	87628477	1423320
6	CHOPPER DRIVE (TC5040, TC5050, TC5060, TC5070, TC5080)	1	87628478	1323464
6	CHOPPER DRIVE, FOR LOW RPM ONLY (TC5040, TC5050, TC5060, TC5070, TC5080)	1	84041094	0323472
7	UNLOADING AUGER DRIVE (BSN C493)	1	84448591	1402217
7	UNLOADING AUGER DRIVE (ASN D494)	1	84462590	0502215
8	HEADER DRIVE ENGAGING IDLER 3HB ONLY	1	89817374	1524314 EE-TECH
9	TRANSMISSION MECHANICAL TRACTION UPPER (BSN C513)	1	80356024	0312262
9	TRANSMISSION MECHANICAL TRACTION UPPER (ASN D514)	1	9850782	0312265
10	TRANSMISSION MECHANICAL TRACTION LOWER (BSN C513)	1	9850782	0312265
10	TRANSMISSION MECHANICAL TRACTION LOWER (ASN D514)	1	84993224	2612258
11	DRIVE GROUP FOR GRAIN AND TAILINGS ELEVATOR	1	80422731	0302248
11	DRIVE GROUP FOR GRAIN AND TAILINGS ELEVATOR, HIGH SPEED ONLY (TC5060, TC5070, TC5080)	1	753053	0102257
12	ECCENTRIC SHAFT DRIVE	1	80387469	0302251
13-14	2HC DRIVE BESIDE STRAW ELEVATOR	1	84971217	0327386
15	DRUM VARIATOR DRIVE	1	336784	0313181
16	FAN VARIATOR DRIVE	1	9515075	0310193
17	FAN VARIATOR DRIVE	1	9515076	0310157
18	STRAW WALKER SHAFT	1	80431784	0301217
19	STRAW SPREADER	1	913524	1501398

TC 5070

			OE	
2	AIRCONDITIONING COMPRESSOR	1	99466947	0372232
3	DRIVE, ROTARY SCREEN AND FAN	1	84989965	1400235
4	AIR CONDITIONING FAN DRIVE	1	9818704	0372255
4	INTERMEDIATE SHAFT DRIVE	1	87535206	1472238
4	INTERMEDIATE SHAFT DRIVE (TC5070, TC5080, TC5080 HILLSIDE)	1	381237	0372240
5	FEED TABLE CLUTCH	1	424563	0327292
6	CHOPPER DRIVE	1	87628477	1423320
6	CHOPPER DRIVE (TC5040, TC5050, TC5060, TC5070, TC5080)	1	87628478	1323464
6	CHOPPER DRIVE, FOR LOW RPM ONLY (TC5040, TC5050, TC5060, TC5070, TC5080)	1	84041094	0323472
7	UNLOADING AUGER DRIVE (BSN C493)	1	84448591	1402217
7	UNLOADING AUGER DRIVE (ASN D494)	1	84462590	0502215
8	HEADER DRIVE ENGAGING IDLER 3HB ONLY	1	89817374	1524314 EE-TECH
9	TRANSMISSION MECHANICAL TRACTION UPPER (BSN C513)	1	80356024	0312262
9	TRANSMISSION MECHANICAL TRACTION UPPER (ASN D514)	1	9850782	0312265
10	TRANSMISSION MECHANICAL TRACTION LOWER (BSN C513)	1	9850782	0312265
10	TRANSMISSION MECHANICAL TRACTION LOWER (ASN D514)	1	84993224	2612258
11	DRIVE GROUP FOR GRAIN AND TAILINGS ELEVATOR	1	80422731	0302248
11	DRIVE GROUP FOR GRAIN AND TAILINGS ELEVATOR, HIGH SPEED ONLY (TC5060, TC5070, TC5080)	1	753053	0102257
12	ECCENTRIC SHAFT DRIVE	1	80387469	0302251
13-14	2HC DRIVE BESIDE STRAW ELEVATOR	1	84971217	0327386
15	DRUM VARIATOR DRIVE	1	336784	0313181
16	FAN VARIATOR DRIVE	1	9515075	0310193
17	FAN VARIATOR DRIVE	1	9515076	0310157
18	STRAW WALKER SHAFT	1	80431784	0301217
19	STRAW SPREADER	1	913524	1501398

TC 5080

			OE	
2	AIRCONDITIONING COMPRESSOR	1	99466947	0372232
3	DRIVE, ROTARY SCREEN AND FAN	1	84989965	1400235
4	AIR CONDITIONING FAN DRIVE	1	9818704	0372255
4	INTERMEDIATE SHAFT DRIVE	1	87535206	1472238
4	INTERMEDIATE SHAFT DRIVE (TC5070, TC5080, TC5080 HILLSIDE)	1	381237	0372240
5	FEED TABLE CLUTCH	1	424563	0327292
6	CHOPPER DRIVE	1	87628477	1423320
6	CHOPPER DRIVE (TC5040, TC5050, TC5060, TC5070, TC5080)	1	87628478	1323464
6	CHOPPER DRIVE, FOR LOW RPM ONLY (TC5040, TC5050, TC5060, TC5070, TC5080)	1	84041094	0323472
7	UNLOADING AUGER DRIVE (BSN C493)	1	84448591	1402217
7	UNLOADING AUGER DRIVE (ASN D494)	1	84462590	0502215
8	HEADER DRIVE ENGAGING IDLER 3HB ONLY	1	89817374	1524314 EE-TECH
9	TRANSMISSION MECHANICAL TRACTION UPPER (BSN C513)	1	80356024	0312262
9	TRANSMISSION MECHANICAL TRACTION UPPER (ASN D514)	1	9850782	0312265
10	TRANSMISSION MECHANICAL TRACTION LOWER (BSN C513)	1	9850782	0312265
10	TRANSMISSION MECHANICAL TRACTION LOWER (ASN D514)	1	84993224	2612258
11	DRIVE GROUP FOR GRAIN AND TAILINGS ELEVATOR	1	80422731	0302248
11	DRIVE GROUP FOR GRAIN AND TAILINGS ELEVATOR, HIGH SPEED ONLY (TC5060, TC5070, TC5080)	1	753053	0102257
12	ECCENTRIC SHAFT DRIVE	1	80387469	0302251
13-14	2HC DRIVE BESIDE STRAW ELEVATOR	1	84971217	0327386
15	DRUM VARIATOR DRIVE	1	336784	0313181
16	FAN VARIATOR DRIVE	1	9515075	0310193
17	FAN VARIATOR DRIVE	1	9515076	0310157
18	STRAW WALKER SHAFT	1	80431784	0301217
19	STRAW SPREADER	1	913524	1501398

TC 5080 HILLSIDE

			OE	
2	AIRCONDITIONING COMPRESSOR	1	99466947	0372232
3	DRIVE, ROTARY SCREEN AND FAN	1	84989965	1400235
4	AIR CONDITIONING FAN DRIVE	1	9818704	0372255
4	INTERMEDIATE SHAFT DRIVE	1	87535206	1472238
4	INTERMEDIATE SHAFT DRIVE (TC5070, TC5080, TC5080 HILLSIDE)	1	381237	0372240
5	FEED TABLE CLUTCH	1	424563	0327292
6	CHOPPER DRIVE	1	87628477	1423320
6	CHOPPER DRIVE (TC5080 HILLSIDE) (BSN C449)	1	87628478	1323464
6	CHOPPER DRIVE (TC5080 HILLSIDE) (ASN D450)	1	84041095	0323462
6	CHOPPER DRIVE, FOR LOW RPM ONLY (TC 5080 HILLSIDE)	1	84041069	1423470
7	UNLOADING AUGER DRIVE (BSN C493)	1	84448591	1402217
7	UNLOADING AUGER DRIVE (ASN D494)	1	84462590	0502215
8	HEADER DRIVE ENGAGING IDLER 3HB ONLY	1	89817374	1524314 EE-TECH
9	TRANSMISSION MECHANICAL TRACTION UPPER (BSN C513)	1	80356024	0312262
9	TRANSMISSION MECHANICAL TRACTION UPPER (ASN D514)	1	9850782	0312265
10	TRANSMISSION MECHANICAL TRACTION LOWER (BSN C513)	1	9850782	0312265
10	TRANSMISSION MECHANICAL TRACTION LOWER (ASN D514)	1	84993224	2612258
11	DRIVE GROUP FOR GRAIN AND TAILINGS ELEVATOR	1	80422731	0302248
12	ECCENTRIC SHAFT DRIVE	1	80387469	0302251
13-14	2HC DRIVE BESIDE STRAW ELEVATOR	1	84971217	0327386
15	DRUM VARIATOR DRIVE	1	336784	0313181
16	FAN VARIATOR DRIVE	1	9515075	0310193
17	FAN VARIATOR DRIVE	1	9515076	0310157
18	STRAW WALKER SHAFT	1	80431784	0301217
19	STRAW SPREADER	1	913524	1501398

TF 42 - TF 44

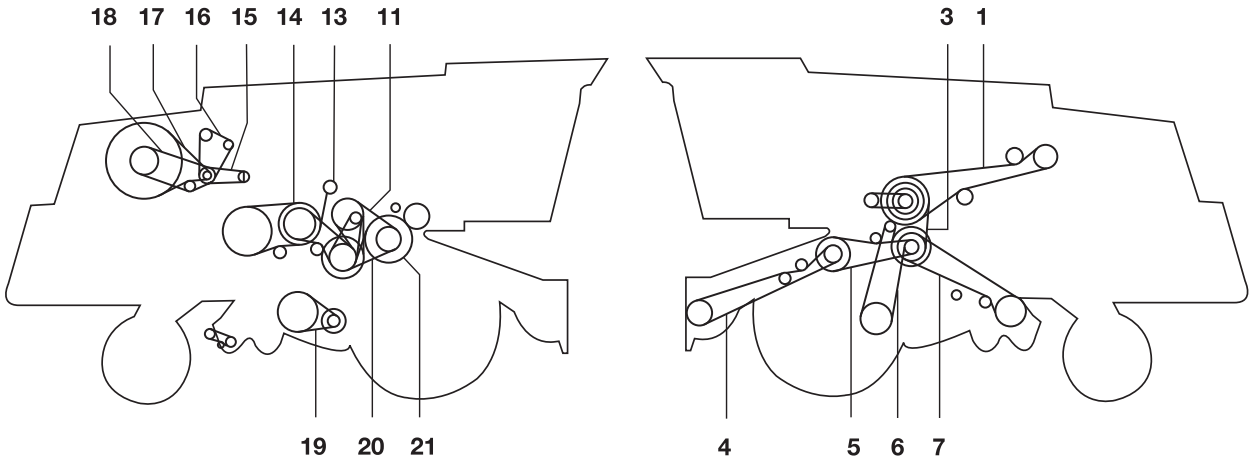

			OE	
1	ENGINE TO BEATER SHAFT	1	80434044	0325367 EE-TECH
2	BEATER TO GRAIN TANK INTERMEDIATE SHAFT	1	80445640	0302134
3	BEATER TO INTERMEDIATE SHAFT (FIAT ENGINE)	1	80434045	1425218
3	BEATER TO INTERMEDIATE SHAFT (MERCEDES ENGINE)	1	80455865	1425218
4	STRAW ELEVATOR DRIVE	2	80433746	0301351
5	BEATER TO STRAW ELEVATOR	1	80434222	0323284
5	BEATER TO STRAW ELEVATOR	1	80350236	0324284
5	BEATER TO STRAW ELEVATOR	1	80743877	0225286 EE-TECH
6	GROUND SPEED VARIATOR	1	80440780	0313321
7	SHAKER SHOE DRIVE	1	80448794	1402307
11	REAR BEATER TO DRUM SHAFT	1	80186347	0302200
13	INTERMEDIATE SHAFT TO ROTARY SEPARATOR	1	80434047	0323229
14	ROTARY SEPARATOR TO ROTOR	1	80434046	1402217
15	AIR CONDITIONING	1	80381237	0372240
16	AIFO ENGINE	1	80449380	0373262
16	MERCEDES ENGINE	1	80432642	0372258
17	DUST CAP	1	80439495	1400264
18	FAN DRIVE	1	80439496	0372325
19	FAN DRIVE	1	80439832	0310153
20	DRUM SHAFT TO INTERMEDIATE SHAFT	1	80434160	0315205
21	INTERMEDIATE SHAFT TO GRAIN ELEVATOR	1	80433639	1601120

TF 46

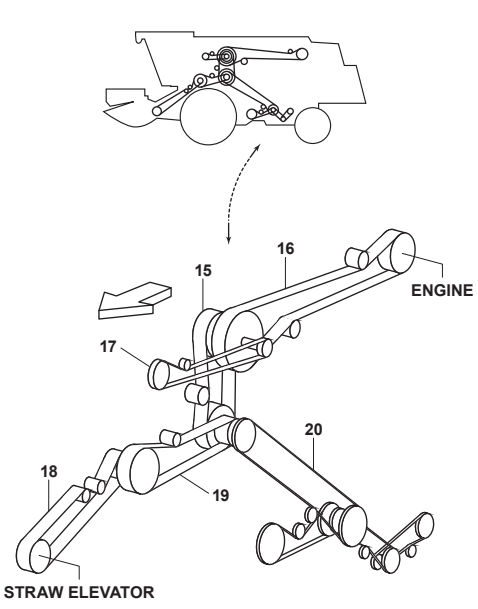

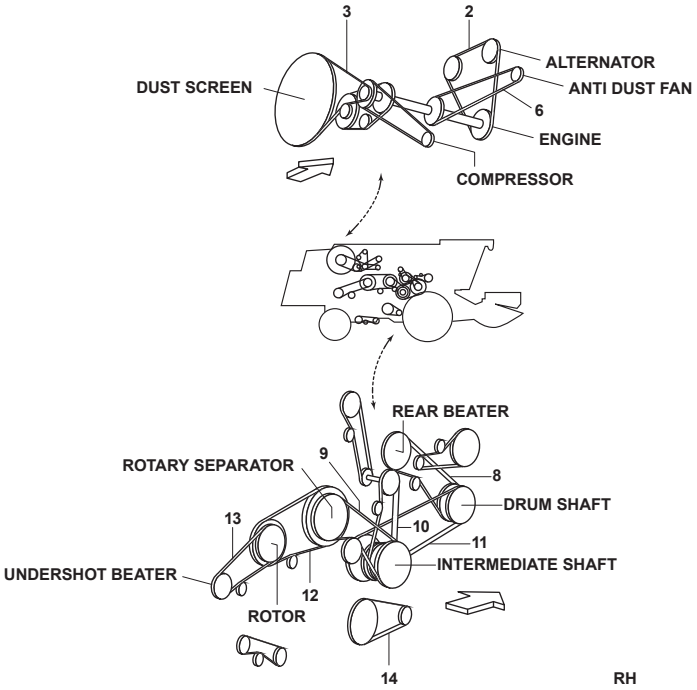

			OE	
1	COOLING FAN DRIVE - INTERMEDIATE SHAFT	1	80439496	0372325
1	COOLING FAN DRIVE - INTERMEDIATE SHAFT	1	89818570	0372325
2	WATERPUMP AND ALTERNATOR DRIVE	1	80748003	0372255
2	WATERPUMP AND ALTERNATOR DRIVE	2	452023	0372262
2	WATERPUMP AND ALTERNATOR DRIVE	2	89832311	0399322
3	ROTARY DUST SCREEN DRIVE	1	80439495	1400264
3	ROTARY DUST SCREEN DRIVE	1	89513136	0300256
5	COMPRESSOR DRIVE	1	381237	0372240
6	DUST SCREEN DRIVE	1	80436304	1573238
7	BEATER DRIVE BELT	1	80186347	0302200
8	BEATER DRIVE BELT	1	9513984	0302200
9	ROTARY SEPARATOR BELT	1	80434047	0323229
10	GRAIN STORAGE DRIVE	1	80433639	1601120
11	DRUM TO INTERMEDIATE SHAFT	1	434160	0315205
12	ROTARY SEPARATOR TO ROTOR	1	80434046	1402217
13	ROTOR TO UNDERSHOT BEATER	1	80427456	0101168
14	CLEANING FAN VARI - DRIVE	1	750318	0310153
15	BEATER TO INTERMEDIATE DRIVE	1	80750166	0326220
16	ENGINE TO BEATER SHAFT	1	750290	0325367 EE-TECH
17	UNLOADING AUGER ENGAGING	1	80445640	0302134
17	UNLOADING AUGER ENGAGING	1	9512971	0302134
18	STRAW ELEVATOR DRIVE - WITHOUT LATERAL FLOTATION	2	80453268	1401208
18	STRAW ELEVATOR DRIVE - WITH LATERAL FLOTATION	1	9504547	1401336
18	STRAW ELEVATOR DRIVE - WITH LATERAL FLOTATION	1	9514990	0323374 EE-TECH
19	BEATER TO STRAW ELEVATOR	1	350236	0324284
20	CLEANING SHOE DRIVE	1	448794	1402307

TF 76

			OE	
1	MAIN DRIVE BELT	1	84817623	1425218
2	HYDROSTATIC DRIVE	1	84817631	0325365 EE-TECH
3	FAN DRIVE	1	84817629	0323173
4	GRAIN ELEVATOR DRIVE	1	89593418	0302393
4	DRIVE BESIDES STRAW ELEVATOR 4HB	1	9593400	0325436
5	BEATER TO STRAW ELEVATOR 2HB	1	80434222	0323284
5	BEATER TO STRAW ELEVATOR 2HB	1	84817632	0324284
6	SHAKER SHOE DRIVE	1	448794	1402307
9	CHOPPER, DRIVE FOR TF76 ONLY	1	84056995	0323440 EE-TECH
10	CHOPPER, DRIVE FOR TF76 ONLY	2	84000189	0302220
11	CHAFF SPREADER, DRIVE	1	84041465	☎
12	DRUM DRIVE	1	84817628	0302200
13	EXTENSION COUNTERSHAFT	1	80919681	0323229
14	AUGER DRIVE	1	84817636	1601120
15	BEATER TO INTERMEDIATE DRIVE	1	89832601	0315205
16	ROTARY SEPARATOR	1	84448591	1402217
17	THROW-OUT BEATER DRIVE	1	80427456	0101168
18	CLEANING FAN DRIVE	1	84817627	0303144
19	CHAFF SPREADER, DRIVE	1	84056019	0172208
20	CHOPPER, DRIVE FOR TF76 ONLY	1	84056995	0323440 EE-TECH
21	CHOPPER, DRIVE FOR TF76 ONLY	1	84000189	0302220
22	CENTRIFUGAL SEPARATOR	1	84817639	0372309
23	ALTERNATOR, WATERPUMP AND FAN	1	84817638	0385359
24	HYDRAULIC PUMP	2	84817670	0372245
25	CLEANING FAN DRIVE	1	84817630	0372288
26	COMPRESSOR DRIVE	1	84817626	0372245
27	ROTARY SIEVE	1	84022715	0399437

TF 78

			OE	
1	THRESHING, DRIVE, BELT AND GUARD	1	80750166	0326220
2	HYDROSTATIC DRIVE	1	84817631	0325365 EE-TECH
3	FAN DRIVE 2 HB	1	84817629	0323173
4	GRAIN ELEVATOR DRIVE	1	89593418	0302393
4	DRIVE BESIDES STRAW ELEVATOR 4HB	1	9593400	0325436
5	BEATER TO STRAW ELEVATOR 2HB	1	80434222	0323284
5	BEATER TO STRAW ELEVATOR 2HB	1	84817632	0324284
6	SHAKER SHOE DRIVE	1	448794	1402307
9	CHOPPER, DRIVE FOR TF78 ONLY	1	84056995	0323440 EE-TECH
10	CHOPPER, DRIVE FOR TF78 ONLY	2	84000189	0302220
11	CHAFF SPREADER, DRIVE	1	84041465	☎
12	DRUM DRIVE	1	84817628	0302200
13	EXTENSION COUNTERSHAFT	1	80919681	0323229
14	AUGER DRIVE	1	84817636	1601120
15	BEATER TO INTERMEDIATE DRIVE	1	89832601	0315205
16	ROTARY SEPARATOR	1	84448591	1402217
17	THROW-OUT BEATER DRIVE	1	80427456	0101168
18	CLEANING FAN DRIVE	1	84817627	0303144
19	CHAFF SPREADER, DRIVE	1	84056019	0172208
20	CHOPPER, DRIVE FOR TF78 ONLY	1	84056995	0323440 EE-TECH
21	CHOPPER, DRIVE FOR TF78 ONLY	1	89819676	2002228
22	ROTARY SCREEN DRIVE	1	84021588	0300201
23	AIR CONDITIONER, ENGINE PARTS	2	84007307	0372280
24	HYDRAULIC PUMP	1	89835816	0172253
25	ROTARY SCREEN DRIVE	2	84021590	0372318
26	ROTARY SCREEN DRIVE	1	84021863	0399462

TR 70

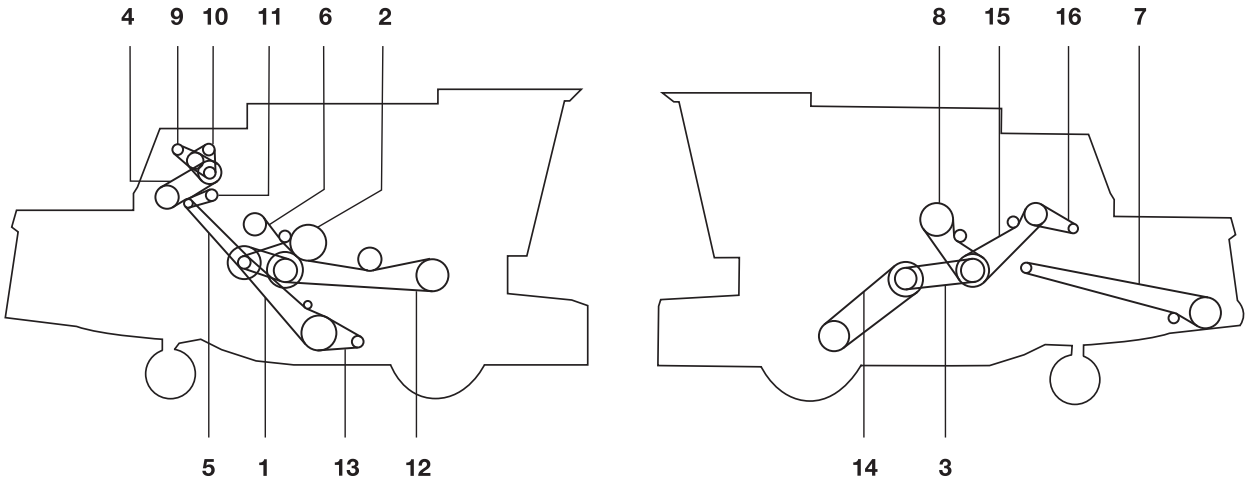

			OE	
1	BEATER DRIVE	1	621104	0102148
2	ELEVATOR DRIVE GRAIN	1	703747	0202187
3	GROUND SPEED VARIATOR DRIVE	1	261000	1413195
4	HYDRAULIC PUMP DRIVE (GAS AND CATERPILLAR ENGINE DIESEL)	1	248332	2001129
4	HYDRAULIC PUMP DRIVE (FORD DIESEL ENGINE)	1	576772	1901133
5	ROTARY SCREEN - JACKSHAFT DRIVE	1	246771	0200134
6	ROTOR DRIVE	1	254093	1913200
6	ROTOR DRIVE (OPT FOR HIGH SPEED)	1	715785	1413193
7	STRAW CHOPPER DRIVE	1	578206	0101321
7	STRAW SPREADER DRIVE	1	246727	0301360
7	STRAW SPREADER DRIVE	1	230143	0301375
8	UNLOADING AUGER DRIVE	1	247782	0102216
9	GOVERNOR (GAS ENGINE)	1	266209	☎
10	ALTERNATOR AND FAN DRIVE (CATERPILLAR ENGINE DIESEL)	1	254084	0173234
10	ALTERNATOR AND FAN DRIVE (GAS ENGINE)	1	261472	☎
10	ALTERNATOR AND FAN DRIVE (FORD ENGINE DIESEL)	1	576774	0172225
10	ALTERNATOR AND FAN DRIVE (CATERPILLAR ENGINE DIESEL)	1	626654	0372240
11	ROTARY SCREEN DRIVE	1	126805	1400066
12	HEADER DRIVE	1	246980	0303317
13	CLEANING FAN DRIVE	1	284521	☎
14	HYDROSTATIC DRIVE - GROUND SPEED	1	268612	0352336
14	GROUND SPEED VARIATOR DRIVE	1	261001	0313269
15	MAIN DRIVE - POWER BAND (GAS AND CATERPILLAR ENGINE DIESEL)	1	246978	0325290 EE-TECH
15	MAIN DRIVE - POWER BAND (FORD ENGINE DIESEL)	1	576771	0325294
16	AIR CONDITIONING COMPRESSOR DRIVE (GAS AND CATERPILLAR ENGINE DIESEL)	1	264557	0172235
16	AIR CONDITIONING COMPRESSOR DRIVE (FORD ENGINE DIESEL)	1	80576776	0172237

TR 75

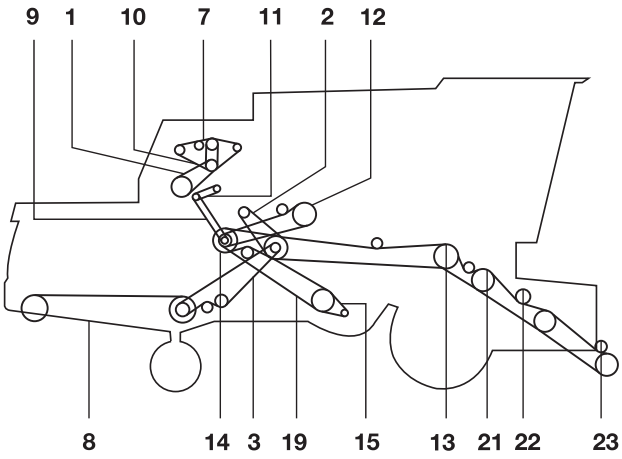

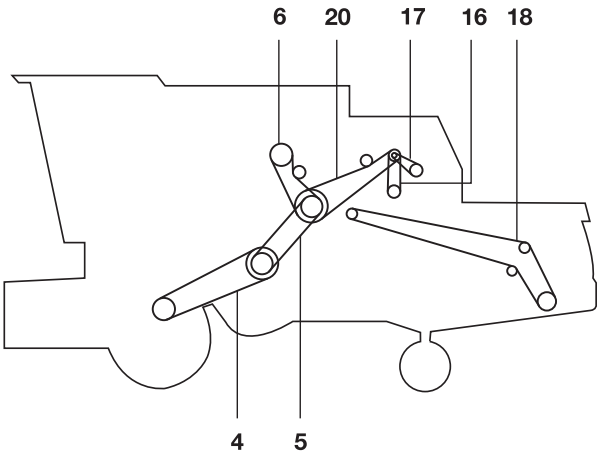

			OE	
1	HYDRAULIC PUMP DRIVE (WITHOUT CATERPILLAR ENGINE)	1	248332	2001129
1	HYDRAULIC PUMP DRIVE (FORD ENGINE DIESEL)	1	576772	1901133
2	ROTARY VARIATOR DRIVE	1	717700	1413195
2	ROTOR VARIATOR DRIVE - HIGH SPEED ROTOR	1	637783	1513207
2	ROTOR VARIATOR DRIVE - STANDARD SPEED ROTOR	1	640143	0213197
3	STRAW CHOPPER (FRONT)	1	619748	0302224
4	HYDROSTATIC TRACTION DRIVE (LOWER)	1	716414	0102231
4	HYDROSTATIC TRACTION DRIVE (LOWER)	1	634042	2002237
4	HYDROSTATIC TRACTION DRIVE (LOWER)	1	636645	0313269
5	HYDROSTATIC TRACTION DRIVE (UPPER)	1	716416	0302717
5	STANDARD TRACTION VARIATOR DRIVE (UPPER)	1	717700	1413195
5	STANDARD TRACTION VARIATOR DRIVE (UPPER)	1	254093	1913200
6	UNLOADING AUGER DRIVE	1	247782	0102216
7	ENGINE FAN (WITHOUT CATERPILLAR ENGINE)	1	647901	0372232
7	ENGINE FAN (FORD ENGINE)	1	772654	0172228
8	STRAW CHOPPER (REAR)	1	614040	0202305
9	ROTARY SCREEN - (LOWER) 65.75	1	610767	0372260
9	ROTARY SCREEN - (LOWER) 68.3	1	612305	1472264
10	ALTERNATOR AND WATERPUMP DRIVE	1	772656	0272247
11	ROTARY SCREEN (UPPER)	1	716254	0101098
12	CLEAN GRAIN ELEVATOR DRIVE	1	703747	0202187
13	HEADER DRIVE 167-9/32	1	246980	0303317
13	HEADER DRIVE 193	1	682008	0303370
14	DISCHARGE BEATER DRIVE	1	621104	0102148
15	CLEANING FAN - VARIATOR DRIVE 46 SLOW DOWN	1	624398	0809104
15	CLEANING FAN - VARIATOR DRIVE 58 STANDARD	1	642569	☎
16	HYDROSTATIC CHARGE PUMP DRIVE	1	259477	1401129
17	AIR COMPRESSOR - 48	1	259346	1472227
17	AIR COMPRESSOR - 52.75	1	264557	0172235
17	AIR COMPRESSOR - 54.5	1	80576776	0172237
18	STRAW CHOPPER DRIVE	1	246727	0301360
18	STRAW CHOPPER DRIVE	1	230143	0301375

TR 75 (CONTINUED)

			OE	
19	SHAKER SHOE DRIVE	1	785415	0323282
20	MAIN SHAFT DRIVE - STANDARD TRACTION	1	795009	0357350
20	MAIN SHAFT DRIVE	1	576771	0325294
21	FEEDER DRIVE	1	620944	1937206
22	FEEDER HOUSE FIXED SPEED	2	621367	0702225
22	FEEDER DRIVE VARIABLE SPEED	1	630010	0312262
23	FEEDER DRIVE VARIABLE SPEED	1	699368	0357250
23	FEEDER DRIVE VARIABLE SPEED	1	632890	0137218

TR 85

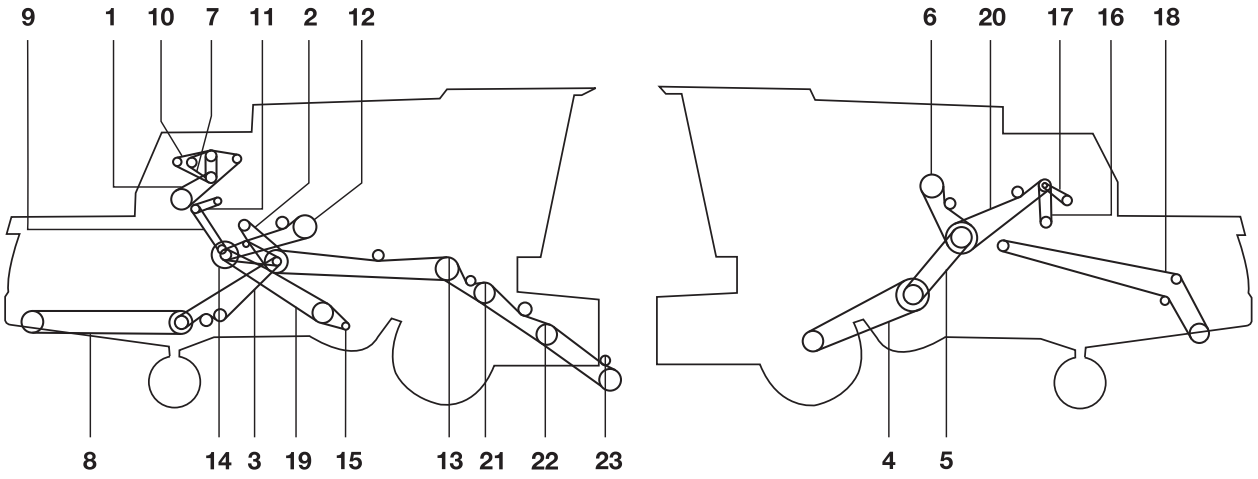

			OE	
2	ROTOR VARIATOR DRIVE - HIGH SPEED ROTOR	1	637783	1513207
2	ROTARY VARIATOR DRIVE	1	717700	1413195
2	ROTOR VARIATOR DRIVE - STANDARD SPEED ROTOR	1	640143	0213197
3	STRAW CHOPPER (FRONT)	1	619748	0302224
4	HYDROSTATIC TRACTION DRIVE (LOWER)	1	716414	0102231
4	HYDROSTATIC TRACTION DRIVE (LOWER)	1	634042	2002237
4	HYDROSTATIC TRACTION DRIVE (LOWER)	1	636645	0313269
5	HYDROSTATIC TRACTION DRIVE (UPPER)	1	716416	0302717
5	STANDARD TRACTION VARIATOR DRIVE (UPPER)	1	717700	1413195
5	STANDARD TRACTION VARIATOR DRIVE (UPPER)	1	254093	1913200
6	UNLOADING AUGER DRIVE	1	247782	0102216
7	ENGINE FAN (WITHOUT CATERPILLAR ENGINE)	1	647901	0372232
7	ENGINE FAN (FORD ENGINE)	1	772654	0172228
8	STRAW CHOPPER (REAR)	1	614040	0202305
9	ROTARY SCREEN - (LOWER) 65.75	1	610767	0372260
9	ROTARY SCREEN - (LOWER) 68.3	1	612305	1472264
11	ROTARY SCREEN (UPPER)	1	716254	0101098
12	CLEAN GRAIN ELEVATOR DRIVE	1	703747	0202187
13	HEADER DRIVE 167-9/32	1	246980	0303317
13	HEADER DRIVE 193	1	682008	0303370
14	DISCHARGE BEATER DRIVE	1	621104	0102148
15	CLEANING FAN - VARIATOR DRIVE 46 SLOW DOWN	1	624398	0809104
15	CLEANING FAN - VARIATOR DRIVE 58 STANDARD	1	642569	☎
16	HYDROSTATIC CHARGE PUMP DRIVE	1	259477	1401129
17	AIR COMPRESSOR - 48	1	259346	1472227
17	AIR COMPRESSOR - 52.75	1	264557	0172235
17	AIR COMPRESSOR - 54.5	1	80576776	0172237
18	STRAW CHOPPER DRIVE	1	246727	0301360
18	STRAW SPREADER DRIVE	1	230143	0301375
19	SHAKER SHOE DRIVE	1	785415	0323282
20	MAIN SHAFT DRIVE - STANDARD TRACTION	1	795009	0357350

TR 85 (CONTINUED)

			OE	
20	MAIN SHAFT DRIVE	1	246978	0325290 EE-TECH
21	FEEDER DRIVE	1	620944	1937206
22	FEEDER HOUSE FIXED SPEED	2	621367	0702225
22	FEEDER DRIVE VARIABLE SPEED	1	630010	0312262
23	FEEDER DRIVE VARIABLE SPEED	1	699368	0357250
23	FEEDER DRIVE VARIABLE SPEED	1	632890	0137218

TR 86

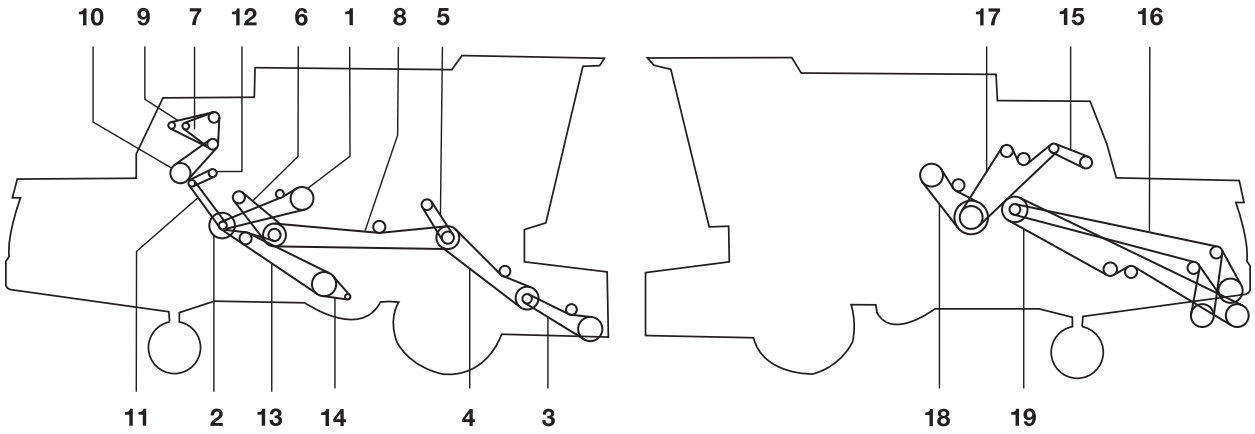

			OE	
1	CLEAN GRAIN ELEVATOR DRIVE	1	703747	0202187
2	DISCHARGE BEATER DRIVE	1	617362	1423188
3	FEEDER DRIVE	1	699268	0357262
4	SMALL GRAIN SPECIAL	1	9613963	0324344
4	FEEDER HOUSE FIXED SPEED	2	621367	0702225
4	FEEDER DRIVE VARIABLE SPEED	1	849514	0312262
5	HYDRAULIC REEL PUMP DRIVE	1	244025	0201123
6	ROTOR VARIATOR DRIVE - HIGH SPEED ROTOR	1	637783	1513207
6	ROTOR VARIATOR DRIVE - STANDARD SPEED ROTOR	1	640143	0213197
7	ENGINE FAN HYDRAULIC PUMP	2	855676	0372260
7	ENGINE FAN DRIVE	2	647901	0372232
8	HEADER DRIVE	1	682008	0303370
9	ALTERNATOR DRIVE	2	572981	0172217
9	ALTERNATOR DRIVE	2	626654	0372240
10	HYDRAULIC PUMP DRIVE	2	855676	0372260
10	HYDRAULIC PUMP DRIVE	2	248332	2001129
11	ROTARY SCREEN DRIVE (PRIMARY)	1	610767	0372260
11	ROTARY SCREEN DRIVE (PRIMARY)	1	612305	1472264
12	ROTARY SCREEN DRIVE (SECONDARY)	1	716254	0101098
13	SHAKER SHOE DRIVE	1	785415	0323282
14	CLEANING FAN - VARIATOR DRIVE 52	1	624398	0809104
14	CLEANING FAN - VARIATOR DRIVE 58 STANDARD	1	792809	0310128
15	AIR CONDITIONING COMPRESSOR DRIVE	1	259346	1472227
15	AIR CONDITIONING COMPRESSOR DRIVE	1	577240	1472238
16	STRAW SPREADER DRIVE	1	230143	0301375
17	HYDROSTATIC - MAIN SHAFT DRIVE	1	797978	0357428
17	HYDROSTATIC - MAIN SHAFT DRIVE	1	788803	0357416
18	UNLOADING AUGER DRIVE	1	694982	1902206
19	STRAW CHOPPER DRIVE	1	618853	0323472

TR 87

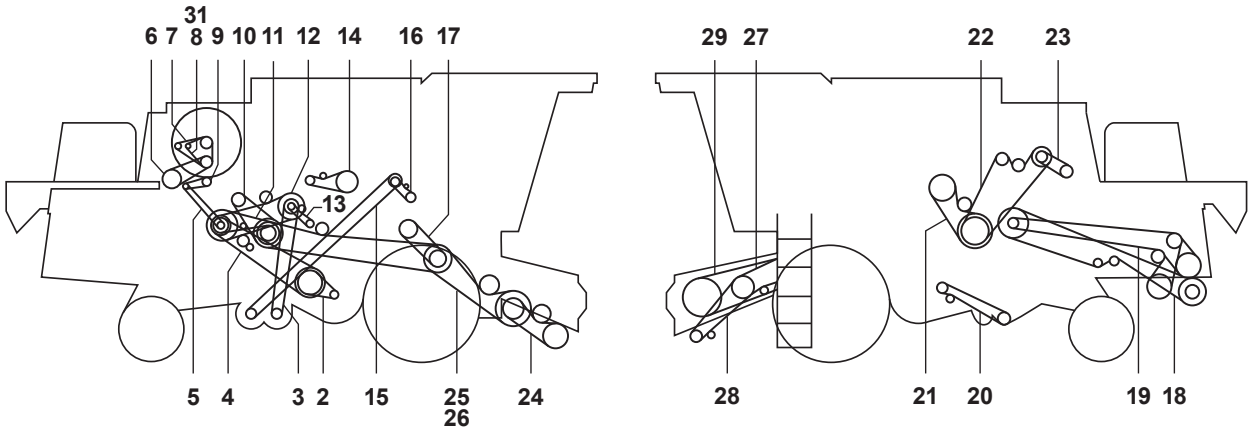

			OE	
2	CLEANING FAN VARI - DRIVE, 58" STANDARD	1	792809	0310128
2	CLEANING FAN VARI - DRIVE, 52", SLOW DOWN KIT	1	624398	0809104
4	SHAKER SHOE DRIVE	1	785415	0323282
5	ROTARY SCREEN DRIVE, PRIMARY	1	612305	1472264
6	HYDRAULIC PUMP DRIVE	2	855676	0372260
7	ALTERNATOR DRIVE, 54,6" LONG	2	577240	1472238
7	ALTERNATOR DRIVE, 55,53 LONG	2	626657	0372240
8	ENGINE FAN DRIVE, HYDRAULIC PUMP	2	855676	0372260
9	ROTARY SCREEN DRIVE, SECONDARY	1	716254	0101098
10	ROTOR VARI - DRIVE, STANDARD SPEED	1	86518570	0213197
10	ROTOR VARI - DRIVE, HIGH SPEED	1	86518571	1513207
11	DISCHARGE BEATER	1	86520043	1423188
12	CLEAN GRAIN ELEVATOR DRIVE	1	703747	0202187
15	HEADER DRIVE	1	682008	0303370
17	HYDRAULIC REEL DRIVE PUMP	1	9609607	0301117
18	STRAW CHOPPER DRIVE	1	86547070	0323472
19	STRAW SPREADER DRIVE	1	230143	0301375
21	UNLOADING AUGER DRIVE	1	694982	1902206
22	MAIN SHAFT DRIVE, HYDROSTATIC	1	797978	0357428
22	MAIN DRIVE, ASN 556481	1	9842665	0357434
23	CONDITIONER COMPRESSOR	1	C9NN10C318B	1472238
24	FEEDER DRIVE	1	699268	0357262
25	FEEDER DRIVE, FIXED SPEED	2	621367	0702225
26	FEEDER DRIVE, VARIABLE SPEED	1	849514	0312262
31	WATER PUMP DRIVE (FORD)	1	592711	0372234

TR 88

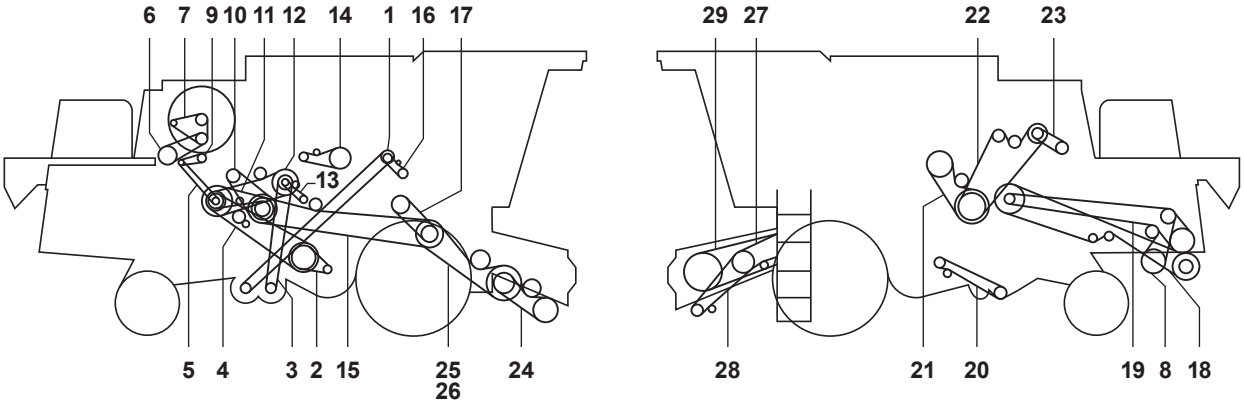

			OE	
2	CLEANING FAN VARI - DRIVE, 58" STANDARD	1	792809	0310128
2	CLEANING FAN VARI - DRIVE, 52", SLOW DOWN KIT	1	624398	0809104
4	SHAKER SHOE DRIVE	1	785415	0323282
5	ROTARY SCREEN DRIVE, PRIMARY	1	612305	1472264
6	HYDRAULIC PUMP DRIVE	2	773255	0272247
7	ALTERNATOR DRIVE	2	86513664	0285301
8	STRAW CHOPPER, INFEED DRIVE	1	331019	1401384
9	ROTARY SCREEN DRIVE, SECONDARY	1	716254	0101098
10	ROTOR VARI - DRIVE, STANDARD SPEED	1	86518570	0213197
10	ROTOR VARI - DRIVE, HIGH SPEED	1	86518571	1513207
11	DISCHARGE BEATER	1	86520043	1423188
12	CLEAN GRAIN ELEVATOR DRIVE	1	703747	0202187
15	HEADER DRIVE	1	682008	0303370
17	HYDRAULIC REEL DRIVE PUMP	1	244025	0201123
18	STRAW CHOPPER DRIVE	1	86547070	0323472
19	STRAW SPREADER DRIVE	1	230143	0301375
21	UNLOADING AUGER DRIVE	1	694982	1902206
22	MAIN SHAFT DRIVE, HYDROSTATIC	1	797978	0357428
23	AIR CONDITIONER COMPRESSOR	1	9842660	0372244
24	FEEDER DRIVE	1	699268	0357262
25	FEEDER DRIVE, FIXED SPEED	2	9613963	0324344
26	FEEDER DRIVE, VARIABLE SPEED	1	849514	0312262

TR 89

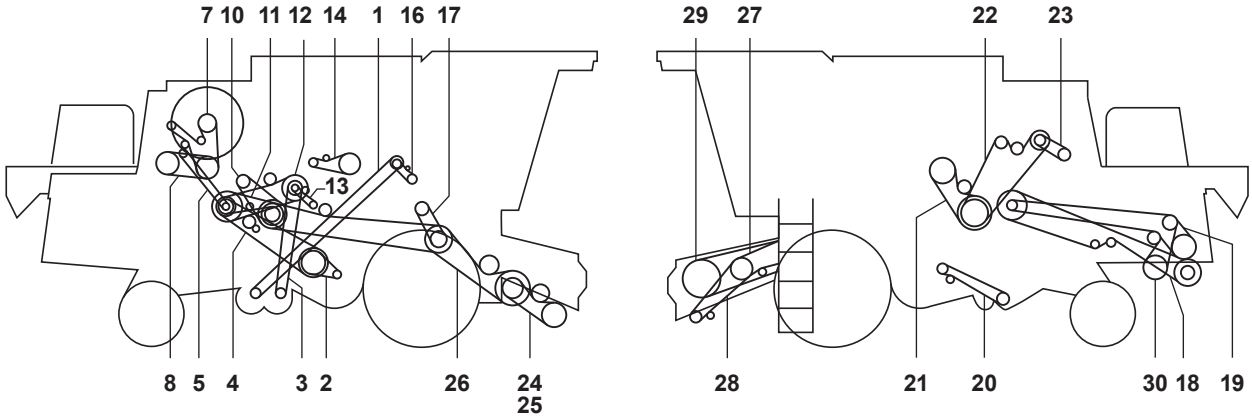

			OE	
2	CLEANING FAN VARI - DRIVE, 61,6" INTERMEDIATE SPEED KIT	1	773300	2610134
2	CLEANING FAN VARI - DRIVE, 69,5", HIGH SPEED KIT	1	792811	0111152
2	CLEANING FAN VARI - DRIVE, 52", SLOW DOWN KIT	1	710752	0710117
4	SHAKER SHOE DRIVE	1	774747	0323281
5	ROTARY SCREEN DRIVE, PRIMARY	1	859063	1401175
7	ALTERNATOR DRIVE	2	86570558	0285316
8	HYDRAULIC PUMP DRIVE	2	773255	0272247
10	ROTOR VARI - DRIVE, STANDARD SPEED	1	86518568	0351568
10	ROTOR VARI - DRIVE, HIGH SPEED	1	86518569	0351272
11	DISCHARGE BEATER	1	86615142	1423198
12	CLEAN GRAIN ELEVATOR DRIVE	1	9604713	0323231
15	HEADER DRIVE	1	86503087	0303370
17	HYDRAULIC REEL DRIVE PUMP	1	9609607	0301117
18	STRAW CHOPPER DRIVE	1	86547070	0323472
19	STRAW SPREADER DRIVE	1	618040	0301426
21	UNLOADING AUGER DRIVE	1	86514256	0302224
22	MAIN SHAFT DRIVE, HYDROSTATIC	1	86514163	0357433
23	AIR CONDITIONER COMPRESSOR	1	9842660	0372244
24	FEEDER DRIVE	1	699268	0357262
25	FEEDER DRIVE, FIXED SPEED	2	9613963	0324344
25	FEEDER DRIVE, FIXED SPEED WITH 12 CORNHEAD	2	86537319	1925345 EE-TECH
26	FEEDER DRIVE, VARIABLE SPEED	1	86610860	1613266
30	STRAW CHOPPER INFEED DRUM DRIVE	1	331019	1401384

TR 95

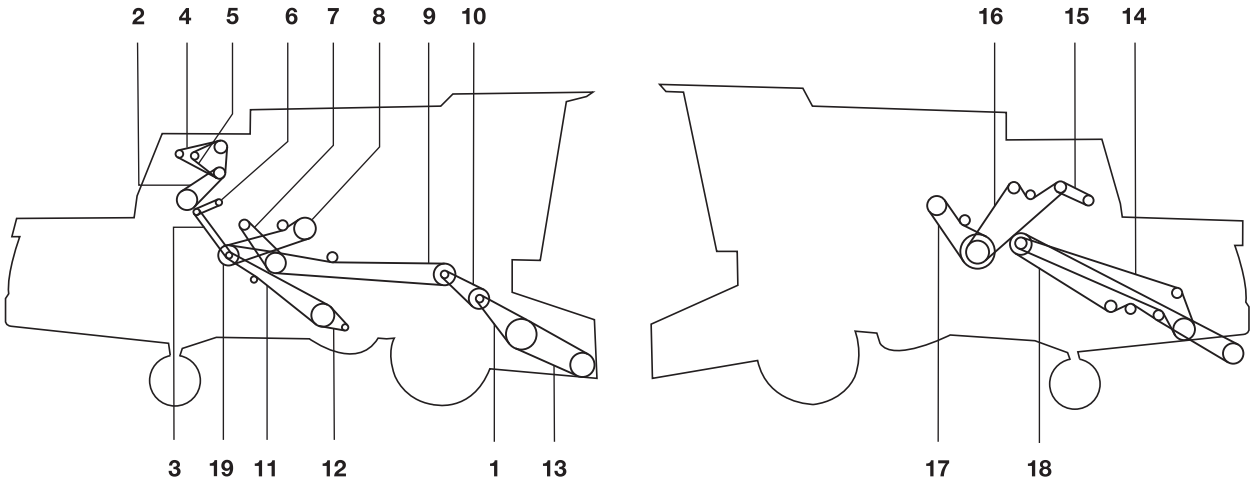

			OE	
1	FEEDER HOUSE FIXED SPEED	2	621367	0702225
1	FEEDER DRIVE VARIABLE SPEED	1	630010	0312262
2	HYDRAULIC PUMP DRIVE	1	624650	1101149
3	ROTARY SCREEN DRIVE	1	615790	0300137
4	ALTERNATOR AND WATERPUMP DRIVE	1	626654	0372240
5	ENGINE FAN DRIVE	1	758340	☎
6	ALTERNATOR DRIVE	2	626657	0372240
6	ROTARY SCREEN DRIVE (SECONDARY)	1	716254	0101098
7	ROTOR DRIVE	1	692974	☎
7	ROTOR DRIVE	1	692975	0351272
7	ROTOR DRIVE	1	787583	☎
8	CLEAN GRAIN ELEVATOR DRIVE	1	230164	2002190
9	HEADER DRIVE	1	246980	0303317
9	ROTOR VARIATOR DRIVE - HIGH SPEED ROTOR	1	692975	0351272
10	FEEDER DRIVE	3	620944	1937206
11	SHAKER SHOE DRIVE	1	774747	0323281
12	CLEANING FAN - VARIATOR DRIVE	1	710751	☎
12	CLEANING FAN - VARIATOR DRIVE (WITHOUT SLOW DOWN)	1	710752	0710117
12	CLEANING FAN - VARIATOR DRIVE (WITHOUT INT.SPEED KIT)	1	773300	2610134
13	STONEROLL DRIVE	5	632890	0137218
14	STRAW CHOPPER BEATER DRIVE	1	230143	0301375
15	AIR CONDITIONING COMPRESSOR DRIVE 48	1	259346	1472227
15	AIR CONDITIONING COMPRESSOR DRIVE 52.75	1	264557	0172235
16	HYDROSTATIC PUMP DRIVE AND MAIN SHAFT	1	649035	0357416
16	HYDROSTATIC PUMP DRIVE AND MAIN SHAFT	1	638337	1513207
17	UNLOADING AUGER DRIVE	1	618805	0302220
18	STRAW SPREADER DRIVE	1	618040	0301426

TR 96

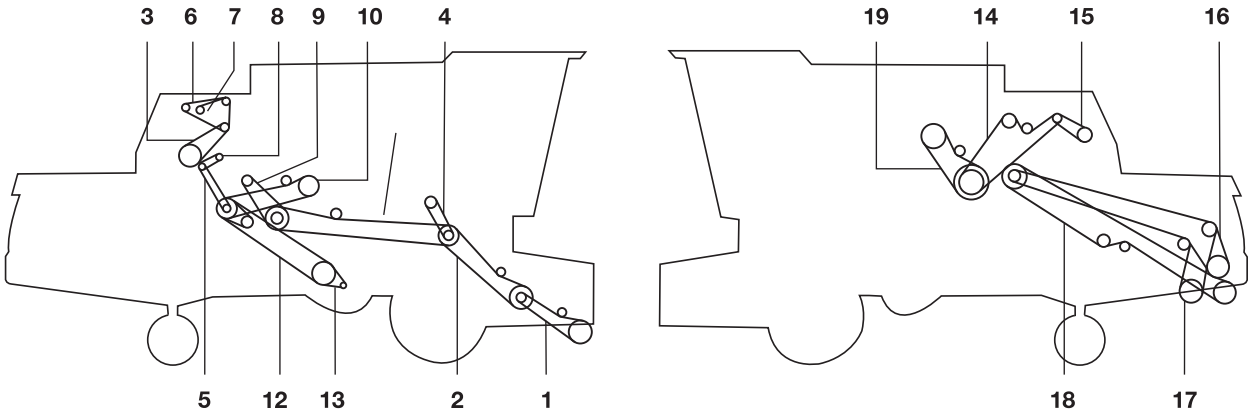

			OE	
1	FEEDER DRIVE	1	699268	0357262
2	SMALL GRAIN SPECIAL - 3HB	1	9613963	0324344
2	FEEDER HOUSE FIXED SPEED	2	621367	0702225
2	FEEDER DRIVE VARIABLE SPEED	1	849514	0312262
2	FEEDER DRIVE VARIABLE SPEED	1	9601511	1613266
3	ENGINE FAN AND HYDRAULIC PUMP	2	855676	0372260
3	HYDRAULIC PUMP DRIVE	1	624650	1101149
3	ENGINE FAN DRIVE	1	768340	2043185
4	HYDRAULIC PUMP DRIVE	1	244025	0201123
5	ROTARY SCREEN DRIVE (PRIMARY)	1	615790	0300137
5	ROTARY SCREEN DRIVE (PRIMARY)	1	859063	1401175
6	ALTERNATOR DRIVE	2	572981	0172217
6	ALTERNATOR DRIVE	2	626654	0372240
6	ALTERNATOR DRIVE	2	626657	0372240
7	WATERPUMP DRIVE	1	592711	0372234
8	ROTARY SCREEN DRIVE (SECONDARY)	1	716254	0101098
9	ROTOR VARIATOR DRIVE - STANDARD SPEED ROTOR	1	692974	☎
9	ROTOR VARIATOR DRIVE - HIGH SPEED ROTOR	1	692975	0351272
10	CLEAN GRAIN ELEVATOR DRIVE IMPROVED	1	9604713	0323231
10	CLEAN GRAIN ELEVATOR DRIVE	1	230164	2002190
11	HEADER DRIVE	1	682008	0303370
12	SHAKER SHOE DRIVE	1	774747	0323281
13	CLEANING FAN - VARIATOR DRIVE 61.6 INT SPEED	1	773300	2610134
13	CLEANING FAN - VARIATOR DRIVE 69.5 HIGH SPEED	1	792811	0111152
14	HYDROSTATIC - MAIN SHAFT DRIVE	1	649035	0357416
14	HYDROSTATIC - MAIN SHAFT DRIVE	1	797979	0357429
15	AIR CONDITIONING COMPRESSOR DRIVE	1	259346	1472227
15	AIR CONDITIONING COMPRESSOR DRIVE	1	626657	0372240
16	STRAW SPREADER DRIVE	1	618040	0301426
17	STRAW CHOPPER - INFEED DRUM DRIVE	1	230143	0301375
18	STRAW CHOPPER DRIVE	1	618853	0323472
19	UNLOADING AUGER DRIVE	1	618805	0302220

TR 97

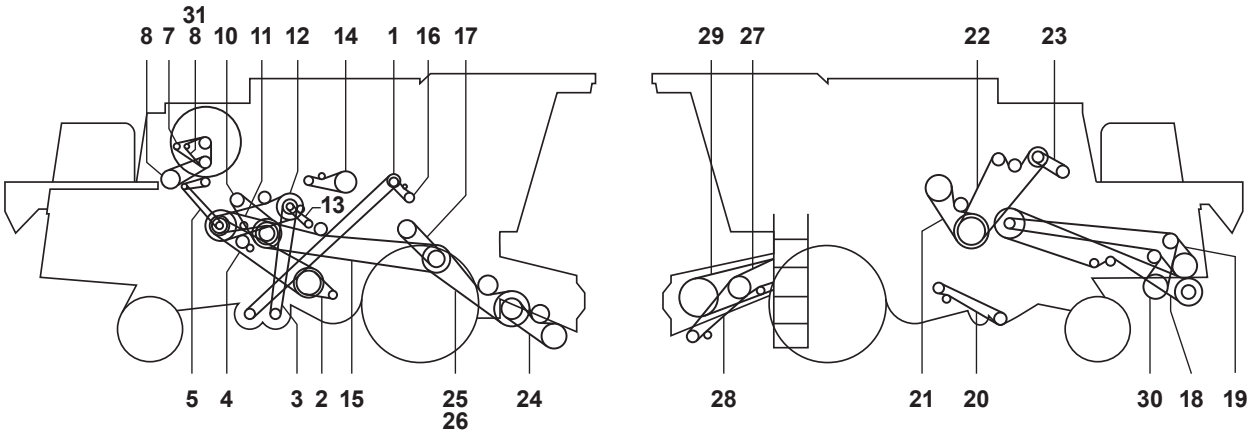

			OE	
2	CLEANING FAN VARI - DRIVE, 61,6", INTERMEDIATE SPEED KIT	1	773300	2610134
2	CLEANING FAN VARI - DRIVE, 69,5", HIGH SPEED KIT	1	792811	0111152
2	CLEANING FAN VARI - DRIVE, 52", SLOW DOWN KIT	1	710752	0710117
2	CLEANING FAN VARI - DRIVE, 69,5", HIGH SPEED KIT	1	792811	0111152
4	SHAKER SHOE DRIVE	1	774747	0323281
5	ROTARY SCREEN DRIVE, PRIMARY	1	859063	1401175
7	ALTERNATOR DRIVE, 54,6" LONG	1	577240	1472238
7	ALTERNATOR DRIVE, 55,5" LONG	1	626657	0372240
7	ALTERNATOR DRIVE, 97.75" LONG	1	9829162	1585345
8	HYDRAULIC PUMP DRIVE, 59"	2	773255	0272247
8	HYDRAULIC PUMP DRIVE, 63"	2	9835816	0172253
10	ROTOR VARI - DRIVE, STANDARD	1	86518568	0351568
10	ROTOR VARI - DRIVE, HIGH SPEED	1	692975	0351272
11	DISCHARGE BEATER	1	86520042	1423198
12	CLEAN GRAIN ELEVATOR DRIVE	1	230164	2002190
12	CLEAN GRAIN ELEVATOR DRIVE, PART OF CLEAN GRAIN ELEVATOR IMPROVEMENT KIT	1	9604713	0323231
15	HEADER DRIVE	1	86503087	0303370
17	HYDRAULIC REEL DRIVE AUGER	1	9609607	0301117
18	STRAW CHOPPER DRIVE	1	86547070	0323472
19	STRAW SPREADER DRIVE	1	618040	0301426
21	UNLOADING AUGER DRIVE	1	86514256	0302224
22	MAIN SHAFT DRIVE, HYDROSTATIC	1	797979	0357429
23	AIR CONDITIONER COMPRESSOR, REPLACES 577240	1	626657	0372240
24	FEEDER DRIVE	1	699268	0357262
25	FIXED SPEED FEEDER	2	621367	0702225
26	VARI - SPEED FEEDER	1	86610860	1613266
30	STRAW CHOPPER INFEED DRUM DRIVE	1	230143	0301375
31	WATER PUMP DRIVE (FORD)	1	592711	0372234

TR 98

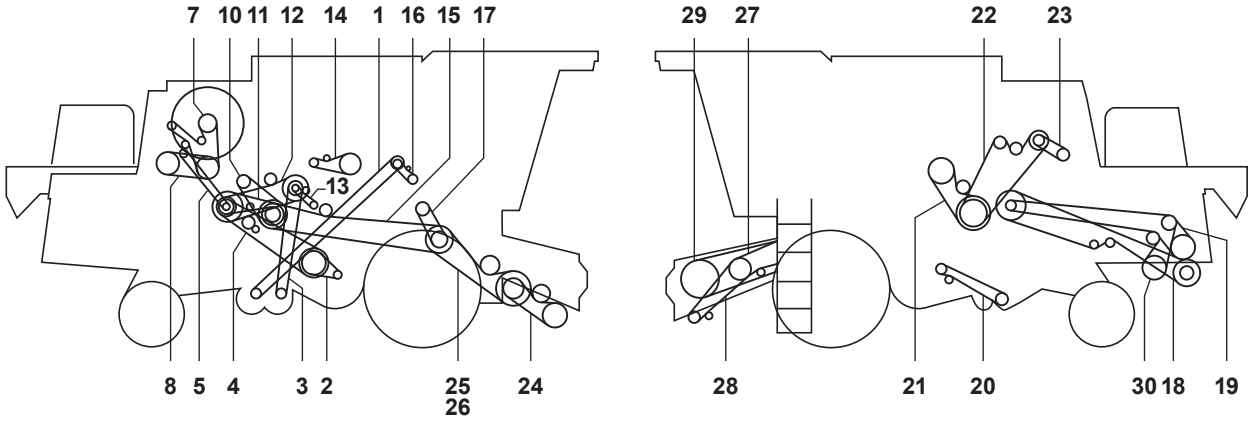

			OE	
2	CLEANING FAN VARI - DRIVE, 61,6", INTERMEDIATE SPEED KIT	1	773300	2610134
2	CLEANING FAN VARI - DRIVE, 52", SLOW DOWN KIT	1	710752	0710117
2	CLEANING FAN VARI - DRIVE, 69,5", HIGH SPEED KIT	1	792811	0111152
4	SHAKER SHOE DRIVE	1	774747	0323281
5	ROTARY SCREEN DRIVE, PRIMARY	1	859063	1401175
7	ALTERNATOR DRIVE	1	86513664	0285301
8	HYDRAULIC PUMP DRIVE, 59"	2	773255	0272247
8	HYDRAULIC PUMP DRIVE, 63"	2	9835816	0172253
10	ROTOR VARI - DRIVE, STANDARD	1	86518568	0351568
10	ROTOR VARI - DRIVE, HIGH SPEED	1	86518569	0351272
11	DISCHARGE BEATER	1	86520042	1423198
12	CLEAN GRAIN ELEVATOR DRIVE	1	230164	2002190
12	CLEAN GRAIN ELEVATOR DRIVE, IMPROVED	1	9604713	0323231
15	HEADER DRIVE	1	86503087	0303370
17	HYDRAULIC REEL DRIVE AUGER	1	9609607	0301117
18	STRAW CHOPPER DRIVE	1	86547070	0323472
19	STRAW SPREADER DRIVE	1	618040	0301426
21	UNLOADING AUGER DRIVE	1	86514256	0302224
22	MAIN SHAFT DRIVE - HYDROSTATIC	1	86514163	0357433
23	AIR CONDITIONER COMPRESSOR	1	9842660	0372244
24	FEEDER DRIVE	1	699268	0357262
25	FIXED SPEED FEEDER	1	9613963	0324344
26	VARI - SPEED FEEDER	1	86610860	1613266
30	STRAW CHOPPER, INFEED DRUM DRIVE	1	331019	1401384

TR 99

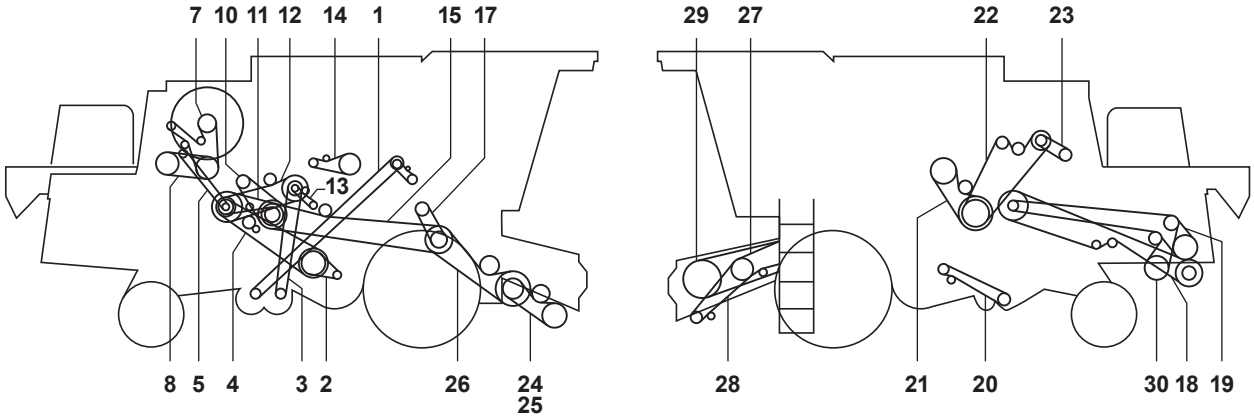

			OE	
2	CLEANING FAN VARI - DRIVE, 61,6", INTERMEDIATE SPEED KIT	1	773300	2610134
2	CLEANING FAN VARI - DRIVE, 52", SLOW DOWN KIT	1	710752	0710117
2	CLEANING FAN VARI - DRIVE, 69,5", HIGH SPEED KIT	1	792811	0111152
4	SHAKER SHOE DRIVE	1	774747	0323281
5	ROTARY SCREEN DRIVE, PRIMARY	1	859063	1401175
7	ALTERNATOR DRIVE	1	86570558	0285316
8	HYDRAULIC PUMP DRIVE	2	773255	0272247
10	ROTOR VARI - DRIVE, STANDARD	1	86610858	0351568
10	ROTOR VARI - DRIVE, HIGH SPEED	1	86610859	0351272
11	DISCHARGE BEATER	1	86615142	1423198
12	CLEAN GRAIN ELEVATOR DRIVE	1	9604713	0323231
15	HEADER DRIVE	1	86571938	0327416
15	HEADER DRIVE, 12 ROW CORNHEAD DRIVE	1	86537318	0327416
17	HYDRAULIC REEL DRIVE AUGER	1	9609607	0301117
18	STRAW CHOPPER DRIVE	1	86547809	1424475
19	STRAW SPREADER DRIVE	1	618040	0301426
21	UNLOADING AUGER DRIVE	1	86514256	0302224
22	MAIN SHAFT DRIVE - HYDROSTATIC	1	86514163	0357433
23	AIR CONDITIONER COMPRESSOR	1	9842660	0372244
24	FEEDER DRIVE	1	699268	0357262
25	FIXED SPEED FEEDER	1	9613963	0324344
25	FIXED SPEED FEEDER - CORNHEAD DRIVE	1	86537319	1925345 EE-TECH
26	VARI - SPEED FEEDER	1	86610860	1613266
30	STRAW CHOPPER, INFEED DRUM DRIVE	1	331019	1401384

TX 30

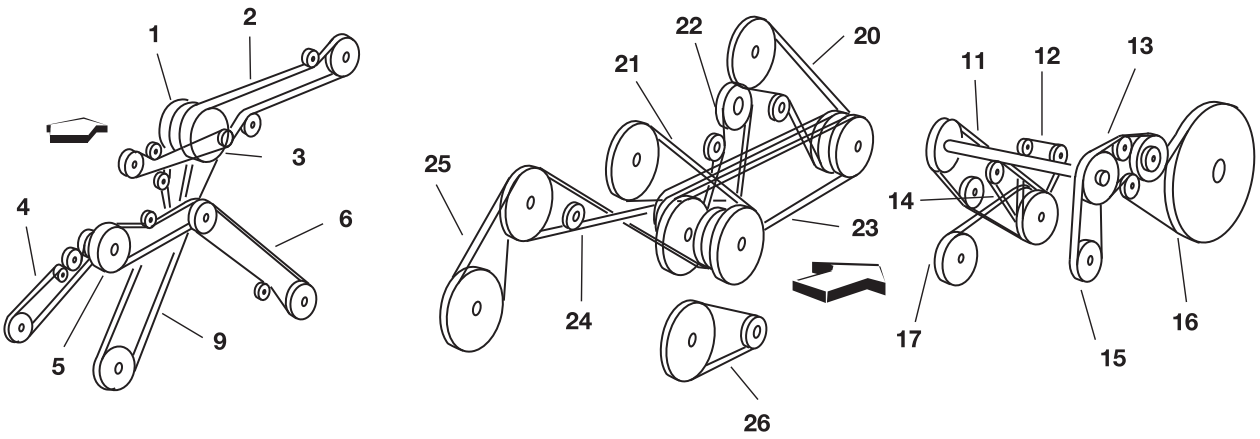

			OE	
1	BEATER TO INTERMEDIATE DRIVE	1	80455865	1425218
2	HYDROSTATIC DRIVE - ENGINE TO BEATER SHAFT	1	80922872	0325361
2	ENGINE TO BEATER SHAFT - MECHANICAL DRIVE	1	80922911	0325362
3	UNLOADING AUGER ENGAGING - CODE 100	1	80445640	0302134
3	UNLOADING AUGER ENGAGING	1	89512971	0302134
4	STRAW ELEVATOR DRIVE	2	80433746	0301351
5	BEATER TO STRAW ELEVATOR	1	80350236	0324284
6	CLEANING SHOE DRIVE	1	80448794	1402307
9	GROUND SPEED VARIATOR DRIVE	1	80440780	0313321
11	COOLING FAN DRIVE - INTERMEDIATE SHAFT	1	80913151	1201153
12	WATERPUMP DRIVE	1	80443634	0372223
13	ROTARY DUST SCREEN DRIVE	1	80913153	0372286
14	ALTERNATOR DRIVE	1	89501182	0372245
15	COMPRESSOR DRIVE	1	89506748	0372199
16	DUST SCREEN DRIVE	1	80923019	0300230
17	HYDRAULIC PUMP DRIVE TO ENGINE	1	89508558	0372231
20	BEATER DRIVE	1	89513984	0302200
21	ROTARY SEPARATOR DRIVE	1	80754285	0202168
22	STORAGE DRIVE GRAIN	1	80433639	1601120
23	DRUM SHAFT TO INTERMEDIATE SHAFT	1	80434160	0315205
24	STRAW WALKER - INTERMEDIATE SHAFT DRIVE	1	80754389	1401208
25	STRAW WALKER DRIVE	1	80754388	0201112
26	CLEANING FAN - VARIATOR DRIVE	1	89502654	0303144

TX 32

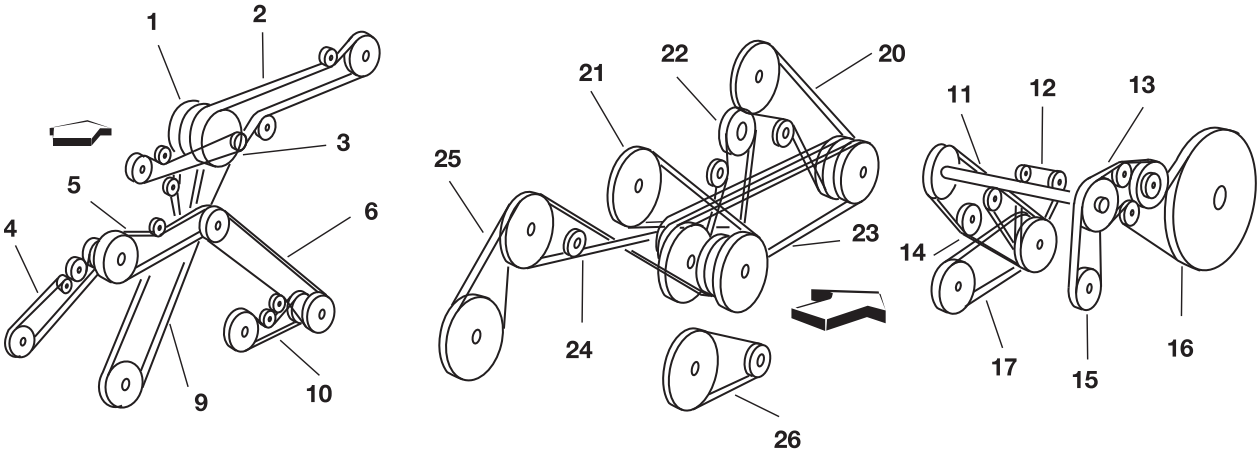

			OE	
1	BEATER TO INTERMEDIATE DRIVE	1	80455865	1425218
2	HYDROSTATIC DRIVE - ENGINE TO BEATER SHAFT	1	80922872	0325361
2	ENGINE TO BEATER SHAFT - MECHANICAL DRIVE	1	80922911	0325362
3	UNLOADING AUGER ENGAGING - CODE 129	1	80445640	0302134
3	UNLOADING AUGER ENGAGING	1	89512971	0302134
4	STRAW ELEVATOR SIDE	2	80433746	0301351
4	STRAW ELEVATOR SIDE	1	80454990	0324392
5	BEATER TO STRAW ELEVATOR	1	80434222	0323284
5	BEATER TO STRAW ELEVATOR	1	80350236	0324284
6	CLEANING SHOE DRIVE - FIXED SHOE	1	80446780	2602304
6	CLEANING SHOE DRIVE - SELF-LEVELLING	1	80448794	1402307
9	GROUND SPEED VARIATOR DRIVE	1	80440780	0313321
10	ECCENTRIC SHAFT DRIVE / FIXED SHOE ONLY	1	80230164	2002190
11	COOLING FAN DRIVE - INTERMEDIATE SHAFT	1	80913151	1201153
12	WATERPUMP DRIVE	1	80443634	0372223
13	ROTARY DUST SCREEN DRIVE	1	80913153	0372286
14	ALTERNATOR DRIVE	1	89501182	0372245
15	COMPRESSOR DRIVE	1	89506748	0372199
16	DUST SCREEN DRIVE	1	80923019	0300230
17	HYDRAULIC PUMP DRIVE TO ENGINE	1	89508558	0372231
20	BEATER DRIVE - CODE 124	1	80186347	0302200
20	BEATER DRIVE - CODE 123	1	89513984	0302200
21	ROTARY SEPARATOR DRIVE	1	80754285	0202168
22	STORAGE DRIVE GRAIN	1	80433639	1601120
23	DRUM SHAFT TO INTERMEDIATE SHAFT	1	80434160	0315205
24	STRAW WALKER - INTERMEDIATE SHAFT DRIVE	1	80754389	1401208
25	STRAW WALKER DRIVE	1	80754388	0201112
26	CLEANING FAN - CODE 111 / SELF-LEVELLING	1	89502654	0303144
26	CLEANING FAN - CODE 111 / FIXED SHOE	1	80919739	0303147
26	CLEANING FAN - CODE 110 / SELF-LEVELLING	1	80439832	0310153

TX 34

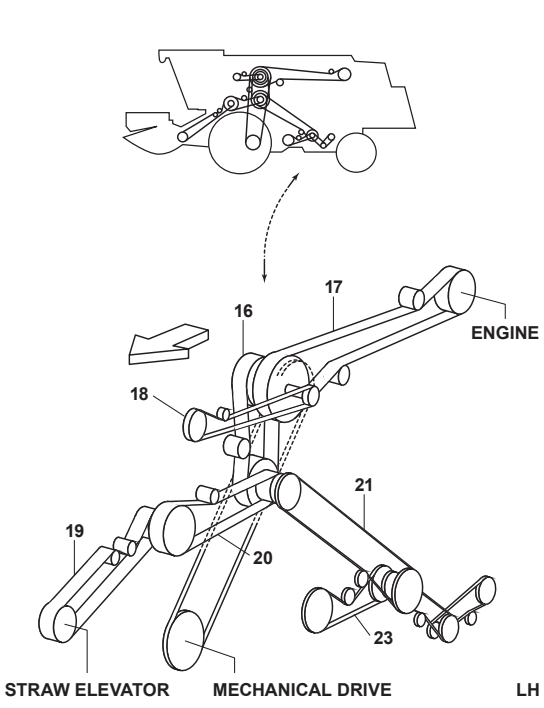

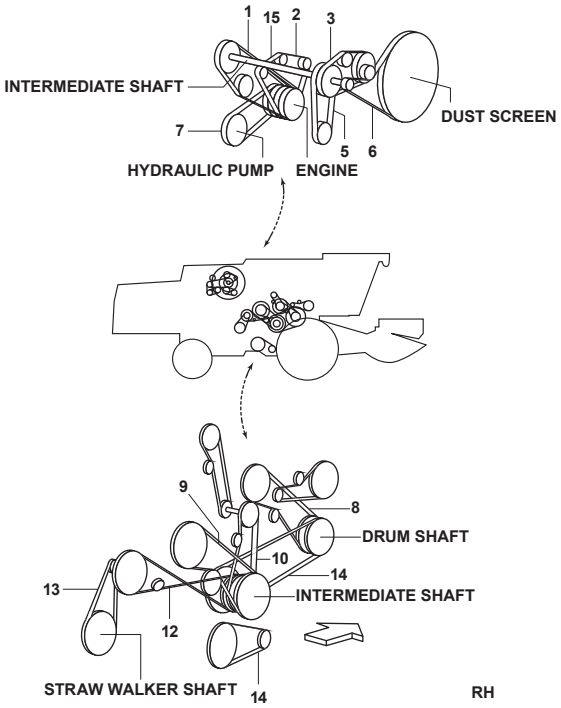

			OE	
1	COOLING FAN DRIVE	1	913151	1201153
2	WATERPUMP DRIVE - FORD ENGINE	1	443634	0372223
3	ROTARY DUST SCREEN DRIVE	1	913153	0372286
3	ROTARY DUST SCREEN DRIVE	1	9815396	0372288
3	ROTARY DUST SCREEN DRIVE	1	9817454	0372286
4	ALTERNATOR DRIVE - FORD ENGINE	1	9501182	0372245
4	ALTERNATOR DRIVE - FORD ENGINE	1	747177	0272247
4	ALTERNATOR DRIVE - FORD ENGINE	1	9815437	0122155
5	COMPRESSOR DRIVE	1	80754165	0372204
5	COMPRESSOR DRIVE	1	9506748	0372199
6	DUST SCREEN DRIVE	1	923019	0300230
6	DUST SCREEN DRIVE	1	9817814	0300230
7	HYDRAULIC PUMP TO ENGINE	1	921698	0272247
7	HYDRAULIC PUMP TO ENGINE - 200 HP	1	84000133	0372242
7	HYDRAULIC PUMP TO ENGINE - 200 HP	2	9839030	0372245
8	BEATER DRIVE	1	80186347	0302200
8	BEATER DRIVE	1	9513984	0302200
9	ROTARY SEPARATOR DRIVE	1	80754285	0202168
9	ROTARY SEPARATOR DRIVE	1	9817439	0202168
10	GRAIN STORAGE DRIVE	1	80433639	1601120
10	GRAIN STORAGE DRIVE	1	84015852	1601120
11	DRUM TO INTERMEDIATE SHAFT	1	434160	0315205
12	STRAW WALKER INTERMEDIATE SHAFT DRIVE	1	754389	1401208

TX 34 (CONTINUED)

			OE	
13	STRAW WALKER DRIVE	1	754388	0201112
14	CLEANING FAN VARI - DRIVE FOR SELF LEVELLING ONLY	1	80439832	0310153
14	CLEANING FAN VARI - DRIVE FOR SELF LEVELLING ONLY	1	9502654	0303144
14	CLEANING FAN VARI - DRIVE FOR FIXED SHOE ONLY	1	919739	0303147
15	WATERPUMP AND ALTERNATOR DRIVE (MERCEDES)	1	9501863	0372232
16	BEATER TO INTERMEDIATE DRIVE	1	84817623	1425218
17	ENGINE TO BEATER SHAFT - 2500 RPM	1	922911	0325362
17	ENGINE TO BEATER SHAFT - 2100 RPM	1	9831571	0325365 EE-TECH
17	ENGINE TO BEATER SHAFT - HYDROSTATIC	1	80922872	0325361
18	UNLOADING AUGER ENGAGING	1	80445640	0302134
18	UNLOADING AUGER ENGAGING	1	9512971	0302134
19	STRAW ELEVATOR DRIVE, WITHOUT LATERAL FLOTATION	1	433746	0301351
19	STRAW ELEVATOR DRIVE, WITHOUT LATERAL FLOTATION	1	9514989	1423389 EE-TECH
19	STRAW ELEVATOR DRIVE, WITH LATERAL FLOTATION	1	9504547	1401336
19	STRAW ELEVATOR DRIVE, WITH LATERAL FLOTATION	1	9514990	0323374 EE-TECH
19	STRAW ELEVATOR DRIVE, ONLY FOR AUSTRALIA	1	9513386	0324385
20	BEATER TO STRAW ELEVATOR	1	434222	0323284
20	BEATER TO STRAW ELEVATOR + CORNHEAD	1	350236	0324284
21	CLEANING SHOE DRIVE	1	448794	1402307
21	CLEANING SHOE DRIVE	1	446780	2602304
22	GROUND SPEED VARIATOR	1	80440780	0313321
23		1	230164	2002190

TX 36

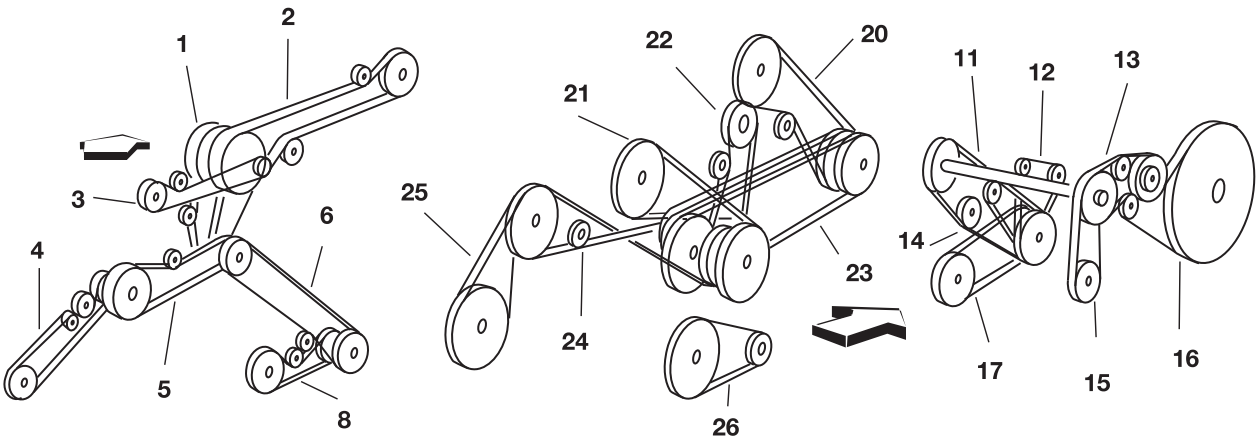

			OE	
1	BEATER TO INTERMEDIATE DRIVE	1	80455865	1425218
2	ENGINE TO BEATER SHAFT	1	80922872	0325361
3	UNLOADING AUGER ENGAGING - CODE 130	1	80445640	0302134
3	UNLOADING AUGER ENGAGING - CODE 129	1	89512971	0302134
4	STRAW ELEVATOR SIDE	1	89504547	1401336
4	STRAW ELEVATOR SIDE	1	89504005	0324377
5	BEATER TO STRAW ELEVATOR	1	80434222	0323284
5	BEATER TO STRAW ELEVATOR	1	80350236	0324284
6	ECCENTRIC SHAFT - CODE 108 / BLOCKED FRAME	1	80230164	2002190
6	CLEANING SHOE DRIVE	1	80448794	1402307
8	ECCENTRIC SHAFT - CODE 109 / BLOCKED FRAME	1	89513620	0202187
11	COOLING FAN DRIVE - INTERMEDIATE SHAFT	1	80913151	1201153
12	WATERPUMP DRIVE	1	80443634	0372223
13	ROTARY DUST SCREEN DRIVE	1	80913153	0372286
14	ALTERNATOR DRIVE	1	89501182	0372245
15	COMPRESSOR DRIVE	1	89506748	0372199
16	DUST SCREEN DRIVE	1	80923019	0300230
17	HYDRAULIC PUMP DRIVE TO ENGINE	1	89508557	0372244
20	BEATER DRIVE - CODE 118	1	80186347	0302200
20	BEATER DRIVE - CODE 117	1	89513984	0302200
21	ROTARY SEPARATOR DRIVE	1	80754285	0202168
22	STORAGE DRIVE GRAIN	1	80433639	1601120
23	DRUM SHAFT TO INTERMEDIATE SHAFT	1	80434160	0315205
24	STRAW WALKER - INTERMEDIATE SHAFT DRIVE	1	80754389	1401208
25	STRAW WALKER DRIVE	1	80754388	0201112
26	CLEANING FAN - VARIATOR DRIVE	1	89502654	0303144

TX62-TX63-TX64-TX65-TX66-TX67-TX68

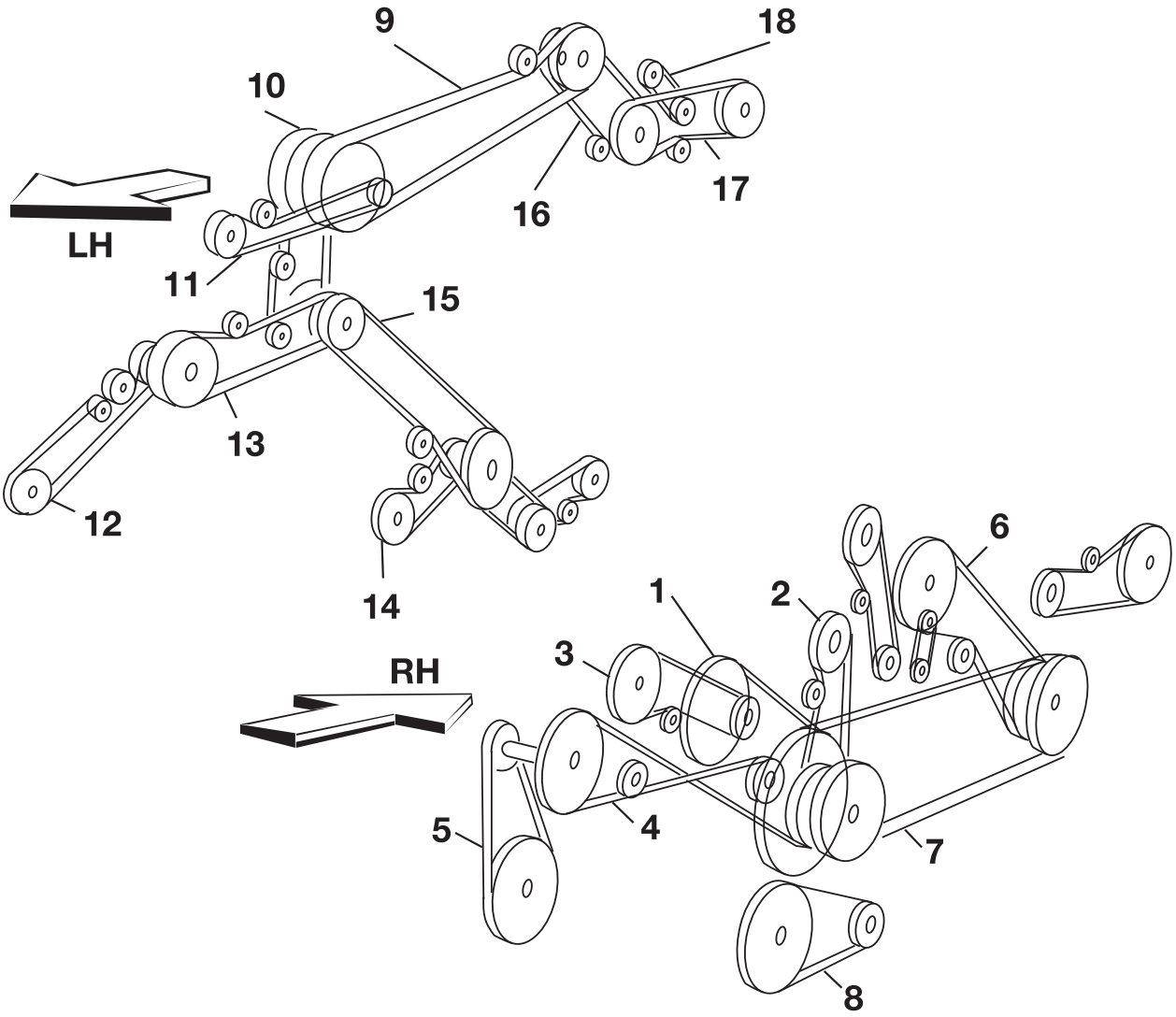

TX 62-64-65-66 (RH)

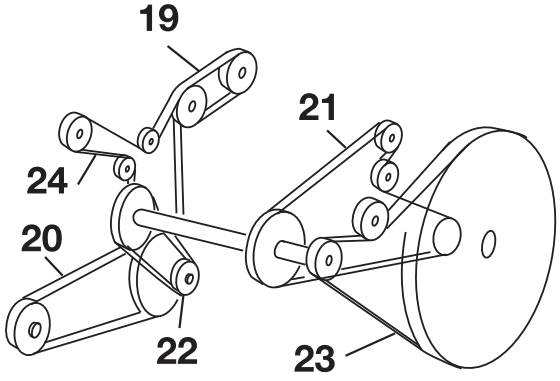

TX 66 (RH)

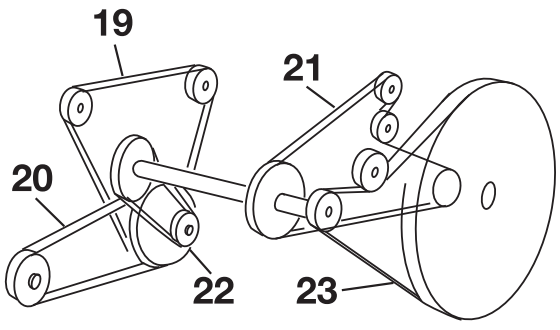

TX62-TX63-TX64-TX65-TX66-TX67-TX68 (CONTINUED)

			OE	
1	ROTARY SEPARATOR DRIVE AND SHAFT (SERIAL NR. 5109001-...)	1	84015531	0102176
1	ROTARY SEPARATOR DRIVE AND SHAFT (SERIAL NR. 5101001-5108999)	1	89850770	1102171
2	STRAW FLOW BEATER DRIVE	1	84817636	1601120
3	STRAW FLOW BEATER DRIVE	1	84015852	1601120
4		1	80754389	1401208
5		1	80230043	0401111
6		1	89513984	0302200
7	DRUM VARI DRIVE	1	80434160	0315205
7	DRUM VARI DRIVE	1	84817640	0367305
8	VENTILATOR DRIVE	1	84023277	0303117
8	VENTILATOR DRIVE	1	89502654	0303144
8	VENTILATOR DRIVE	1	919739	0303147
8	VENTILATOR DRIVE	1	84023278	0360230
9	FOR TX62-TX63-TX64-TX65-TX66 ONLY	1	80922911	0325362
9	FOR TX67-TX68 ONLY	1	89831571	0325365 EE-TECH
10	MAIN DRIVE	1	80455865	1425218
11	UNLOADING AUGER DRIVE	1	89814069	0323173
12	FOR LATERAL FLOTATION	1	89593400	0325436
12	FOR LATERAL FLOTATION	1	89593418	0302393
12	DRIVE BESIDES STRAW ELEVATOR	1	89593440	0302400
12	THANK YOU GATES	1	89593464	0325442
13	HEADER DRIVE 2HB	1	80434222	0323284
13	HEADER DRIVE 3HB	1	89832309	0324284
14	SHAKER SHOE DRIVE FOR BLOCKED FRAME ONLY	1	89513620	0202187
14	SHAKER SHOE DRIVE FOR FIXED SHOE ONLY	1	80230164	2002190
15	BLOCKED FRAME	1	80446780	2602304
15	FIXED SHOE	1	80448794	1402307
16	SELF LEVELLING - FOR TX62-TX64-TX65-TX66 ONLY (SERIAL NR. ...-C1032)	1	84005417	0323313
16	FOR TX62-TX63-TX64-TX65-TX66 ONLY (SERIAL NR. D1033-...)	1	84817633	0423318 EE-TECH
16	FOR TX67-TX68 ONLY	1	84817633	0423318 EE-TECH
17	STRAW CHOPPER DRIVE (SERIAL NR. ...-C4620)	1	84004443	0323437 EE-TECH
17	STRAW CHOPPER DRIVE (SERIAL NR. D4620-...)	1	84817637	0323448
18	CHAFF SPREADER DRIVE	1	84018864	0101168
19	AIR CONDITIONER DRIVE - ONLY TX63-TX64-TX65-TX66-TX67 (FORD ENGINE)	1	89835876	0372203
19	AIR CONDITIONER DRIVE - ONLY TX62 (FORD ENGINE)	1	80754165	0372204
19	ROTARY SCREEN DRIVE (FORD ENGINE)	1	84007307	0372280
19	ONLY TX68 (IVECO ENGINE)	2	84007307	0372280
20	ONLY TX62-TX63-TX64-TX65-TX66-TX67 (SERIAL NR. D1033-...) (FORD ENGINE)	2	89839030	0372245
20	ONLY TX62 (SERIAL NR. ...-C1032) (FORD ENGINE)	2	89835816	0172253
20	ONLY TX68 (IVECO ENGINE)	2	89835816	0172253
21	ROTARY SCREEN DRIVE - ONLY TX62 (FORD ENGINE)	1	89833619	0372280
21	ROTARY SCREEN DRIVE - ONLY TX64-TX65 (FORD ENGINE)	1	89514311	0372284
21	ROTARY SCREEN DRIVE- ONLY TX63 (FORD ENGINE)	1	89817454	0372286
21	ROTARY SCREEN DRIVE - ONLY TX 66-TX67-TX68 (FORD ENGINE)	1	89850261	2099358
21	ROTARY SCREEN DRIVE- ONLY TX68 (IVECO ENGINE)	1	89850261	2099358
22	ROTARY SCREEN DRIVE - ONLY TX62 (FORD ENGINE)	1	89833619	0372280
22	ROTARY SCREEN DRIVE - ONLY TX66 (FORD ENGINE)	1	84007307	0372280
22	ONLY TX64-TX65 (FORD ENGINE)	1	89514311	0372284
22	ONLY TX63-TX67 (FORD ENGINE)	1	84041518	0372309
22	ONLY TX68 (IVECO ENGINE)	2	84000838	0372284
23	ROTARY SCREEN DRIVE - ONLY TX66-TX67-TX68 (FORD ENGINE)	1	89818830	0300241
23	ROTARY SCREEN DRIVE - ONLY TX62-TX64-TX65 (FORD ENGINE)	1	89835743	0399280
23	ROTARY SCREEN DRIVE - ONLY TX63 (FORD ENGINE)	1	84022715	0399437
23	ROTARY SCREEN DRIVE - ONLY TX68 (IVECO ENGINE)	1	89818830	0300241
24	ONLY TX62-TX64-TX65-TX66 (FORD ENGINE)	1	89835683	0285330
24	ONLY TX63-TX67 (FORD ENGINE)	1	84036070	0385359

ACROS 530

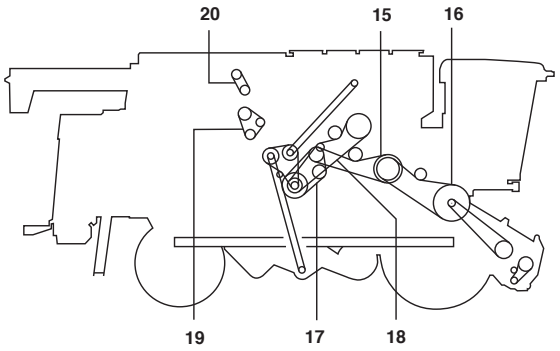

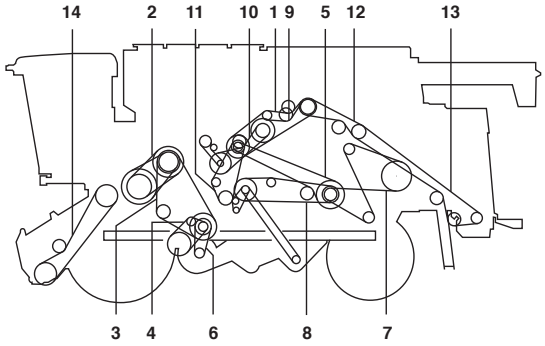

PICKUP PLATFORM

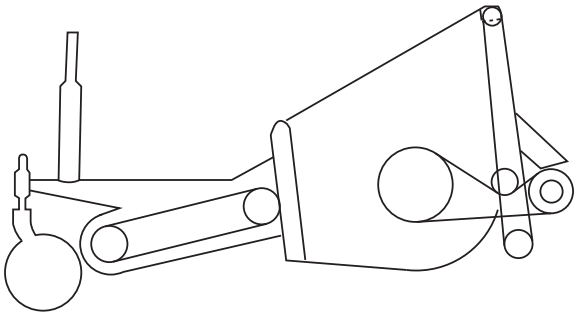

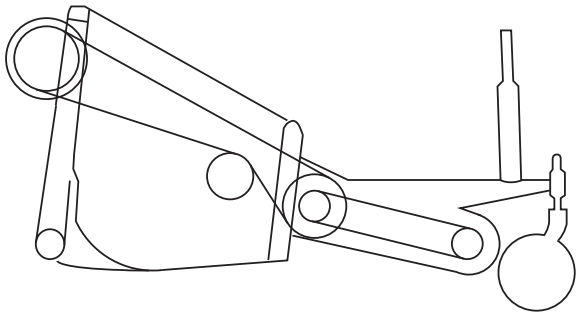

			OE	
1	MAIN COUNTERSHAFT DRIVE	1	6201249	2649360
2	DRUM DRIVE VARIABLE SPEED	1	6201246	2899383
3	CLEANING FAN - COUNTERSHAFT	1	6201297	1419300
4	CLEANING SHAFT DRIVE	2	6201269	1437204
5	COUNTER DRIVE (REAR)	1	6201378	1423364
6	CLEANING FAN DRIVE	1	6201273	2811136
7	SHAKER SHAFT DRIVE	1	6201326	1902376
8	ELEVATOR DRIVE UNIT	1	6201275	0337348
9	AUGER FOR UNLOADING	1	6201316	2823241 EE-TECH
10	UNLOADING BOTTOM SPEED REDUCER	1	6201316	2823241 EE-TECH
11	FINAL THRESHING UNIT	1	6201376	1837245
12	CUTTING DRUM COUNTERDRIVE	1	6201316	2823241 EE-TECH
13	CUTTING DRUM	1	6201375	0723443
14	TRANSMISSION SHAFT	1	6201094	2825366 EE-TECH
15	BEATER DRIVE	1	6201377	2849346
16	TILTED PLATFORM CHAMBER SHAFT	1	6201251	2625326 EE-TECH
17	COUNTER DRIVE GRAIN	1	6201263	1819202
18	AUGER DRIVE	1	6201275	0337348
19	DUST REMOVING FAN	2	6201028	0101105
20	AIR CONDITIONING COMPRESSOR DRIVE	1	6201371	0172214
21	PICK UP FEEDER DRIVE	1	/	0302240
22	TILTED CHAMBER COUNTERDRIVE	1	6201094	2825366 EE-TECH
23	CUTTING UNIT DRIVE	1	6201271	2319270

DON 680

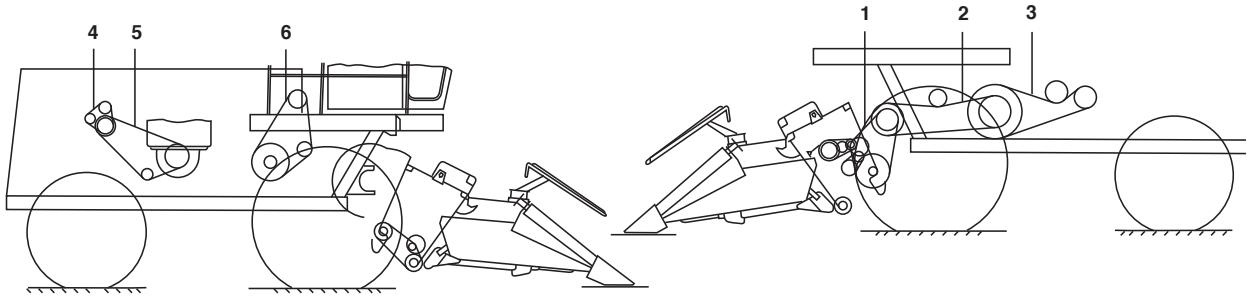

PLATFORM

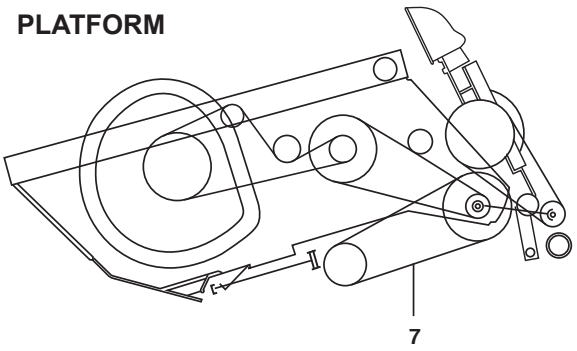

PICK UP

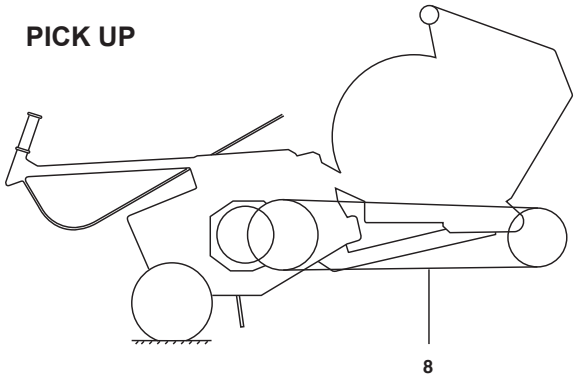

			OE	
1		1	6201249	2649360
2		2	6201269	1437204
3		4	6201166	1819202
4		1	6201264	0225245 EE-TECH
5		1	6201264	0225245 EE-TECH
6		1	6201247	2884427
7		2	6201269	1437204
8		1	6201316	2823241 EE-TECH

DON 1500 A

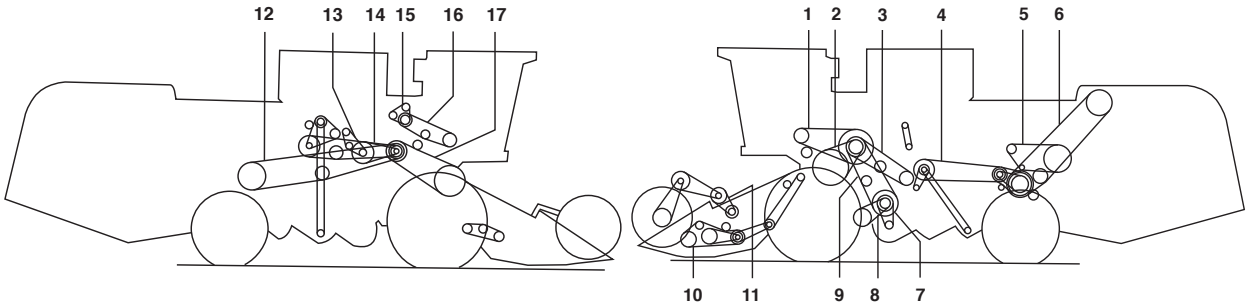

CUTTER PKN1500

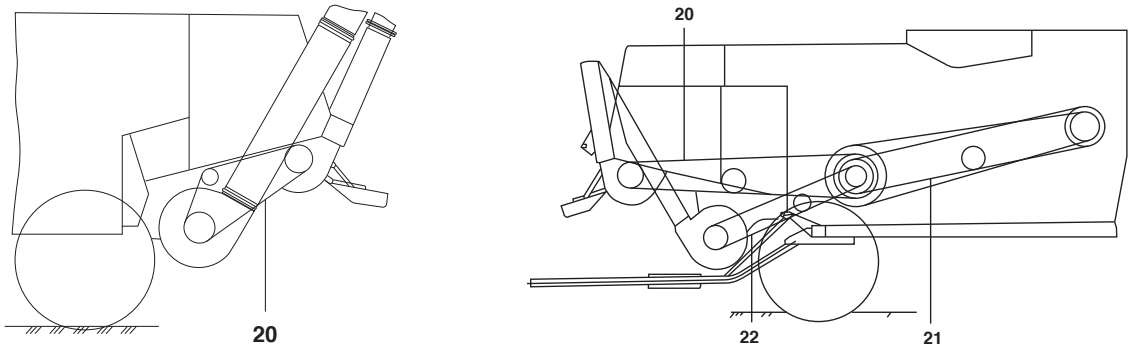

			OE	
1	THRESHING DRUM VARIATOR DRIVE	1	6201249	2649360
2	DRUM DRIVE VARIABLE SPEED	1	6201246	2899383
3	FINAL THRESHING UNIT	1	6201272	0337304
4	ELEVATOR DRIVE UNIT	1	6201275	0337348
5	SHAKER SHAFT DRIVE	1	6201326	1902376
6	STRAW STACKER DRIVE	2	6201270	1519452
7	CLEANING FAN DRIVE	1	6201273	2811136
8	CLEANING SHAFT DRIVE	2	6201269	1437204
9	CLEANING FAN - COUNTERSHAFT	1	6201297	1419300
10	CUTTING UNIT KNIFE	1	6201253	1519244
11	REEL DRIVE VARIABLE SPEED	1	6201273	2811136
12	COUNTER DRIVE (REAR)	2	6201260	2819534
13	COUNTER DRIVE GRAIN	2	6201197	2619352
14	UNLOADING COUNTERDRIVE	2	6201254	1819202
15	AIR CONDITIONING COMPRESSOR DRIVE	2	6201327	0172220
16	HYDRAULIC PUMP - OIL RADIATOR FAN DRIVE	1	6201264	0225245 EE-TECH
17	TILTED PLATFORM CHAMBER SHAFT	1	6201251	2625326 EE-TECH
18	FAN DRIVE	1	6201275	0337348
19	FAN DRIVE COUNTERSHAFT	1	6201266	1837267
20	CUTTING DRUM	2	6201328	2819482
21	CUTTING DRUM COUNTERDRIVE	2	6201260	2819534
22	AUGER DRIVE	1	6201325	2602304

DON 1500 B

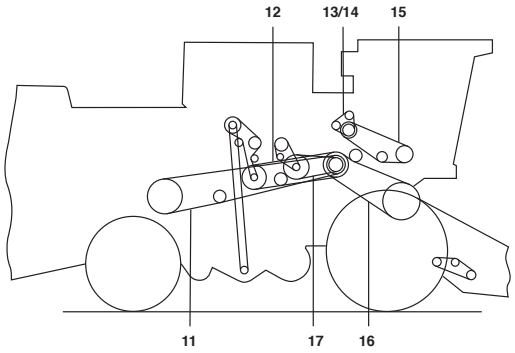

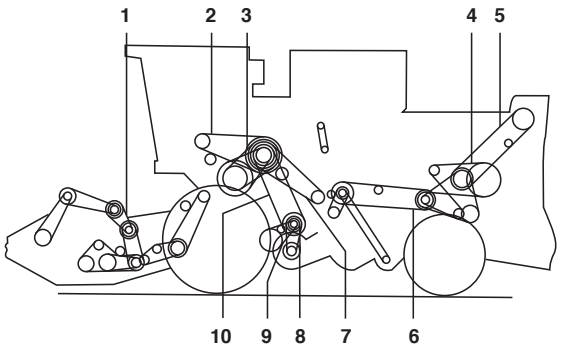

PICK UP PLATFORM

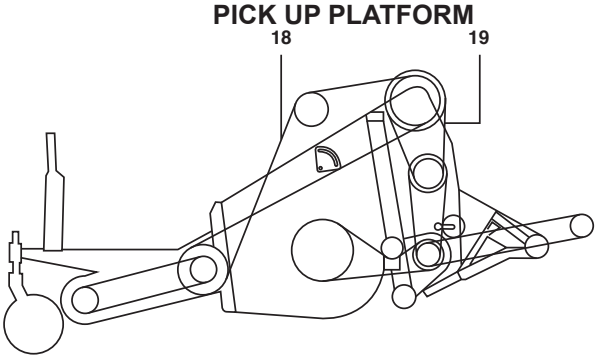

CUTTER PKN1500B

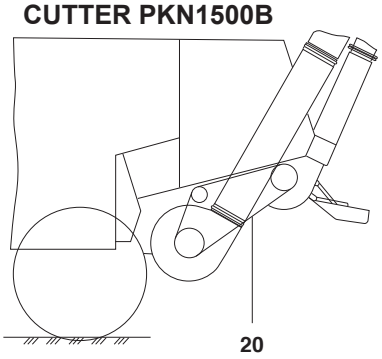

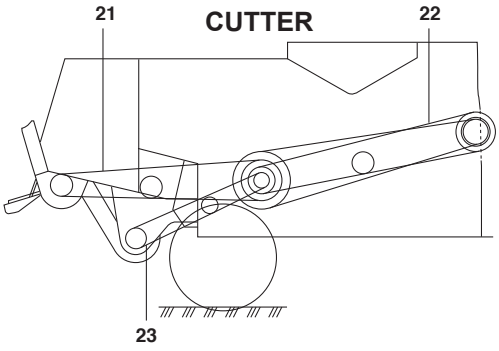

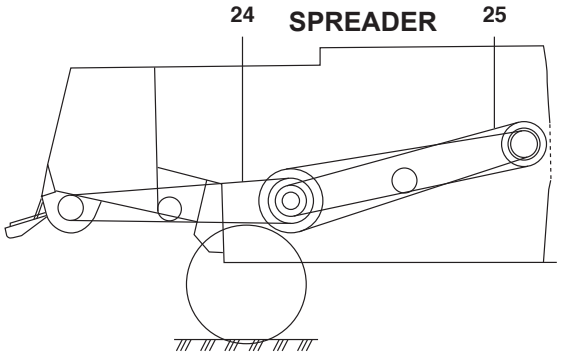

			OE	
1	REEL DRIVE VARIABLE SPEED	1	6201273	2811136
2	THRESHING DRUM VARIATOR DRIVE	1	6201249	2649360
3	DRUM DRIVE VARIABLE SPEED	1	6201246	2899383
4	SHAKER SHAFT DRIVE	1	6201326	1902376
5	STRAW STACKER DRIVE	2	6201197	2619352
6	ELEVATOR DRIVE UNIT	1	6201275	0337348
7	FINAL THRESHING UNIT	1	6201272	0337304
8	CLEANING FAN DRIVE	1	6201273	2811136
9	CLEANING SHAFT DRIVE	2	6201269	1437204
10	CLEANING FAN - COUNTERSHAFT	1	6201297	1419300

DON 1500 B (CONTINUED)

			OE	
11	COUNTER DRIVE (REAR)	2	6201260	2819534
12	COUNTER DRIVE GRAIN	1	6201297	1419300
13	AIR CONDITIONING COMPRESSOR DRIVE	2	6201327	0172220
14	AIR CONDITIONING COMPRESSOR DRIVE	2	6201327	0172220
15	HYDRAULIC PUMP - OIL RADIATOR FAN DRIVE	1	6201264	0225245 EE-TECH
16	TILTED PLATFORM CHAMBER SHAFT	1	6201251	2625326 EE-TECH
17	UNLOADING COUNTERDRIVE	2	6201254	1819202
18	PICK UP DRIVE	1	6201347	0702272
19	PICK UP VARIATOR	1	6201273	2811136
20	FAN ROTOR DRIVE	1	6201272	0337304
21	CUTTING DRUM	2	6201328	2819482
22	CUTTING DRUM COUNTERDRIVE	2	6201260	2819534
23	AUGER DRIVE	1	6201325	2602304
24	CUTTING DRUM	2	6201328	2819482
25	CUTTING DRUM COUNTERDRIVE	2	6201260	2819534

DON 1500 M

			OE	
1		1	6201246	2899383
2		1	6201251	2625326 EE-TECH
3		2	6201269	1437204
4		1	6201273	2811136
5		1	6201275	0337348
6		1	6201297	1419300
7		1	6201326	1902376
8		1	6201371	0172214
9		1	6201094	2825366 EE-TECH
10		1	6201375	0723443
11		1	6201376	1837245
12		1	6201275	0337348
13		1	6201263	1819202
14		1	6201316	2823241 EE-TECH
15		1	6201316	2823241 EE-TECH
16		1	6201316	2823241 EE-TECH
17		1	6201377	2849346
18		1	6201249	2649360
19		1	6201378	1423364

NIVA CK-5M-1-75(79)/77(81)

WITH REAPER AND SHREDDER

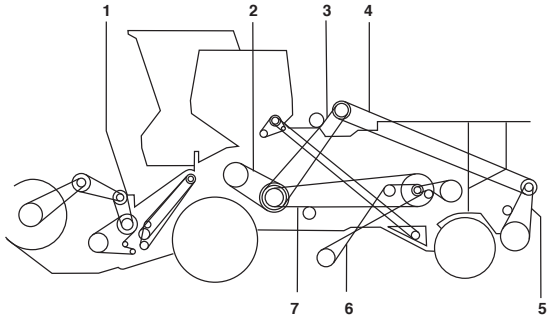

WITH PICK UP AND HOOD

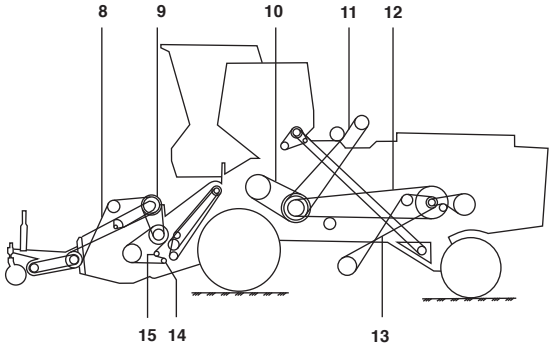

WITH STACKER

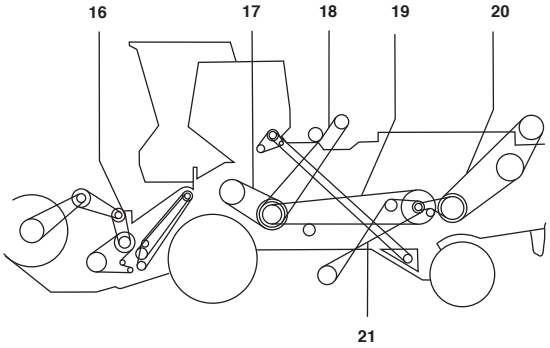

WITH HYDROSTATIC UNDERCARRIAGE AND SHREDDER

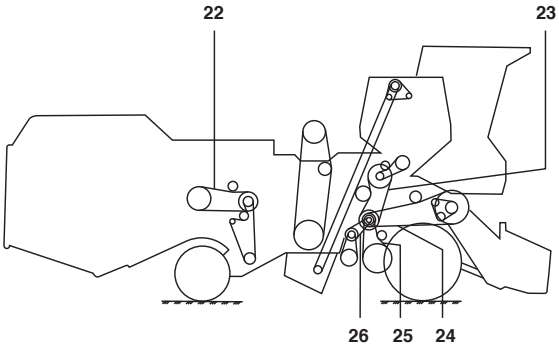

WITH MECHANICAL DRIVE UNDERCARRIAGE AND STACKER

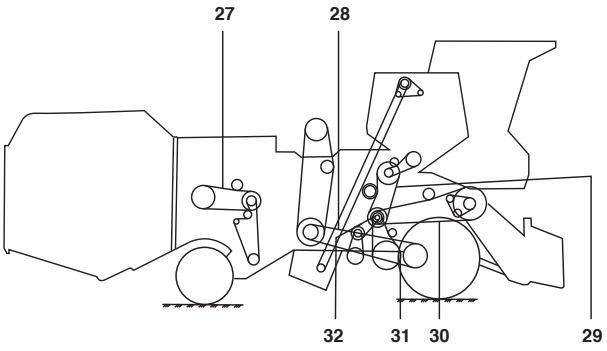

WITH MECHANICAL DRIVE UNDERCARRIAGE AND SHREDDER

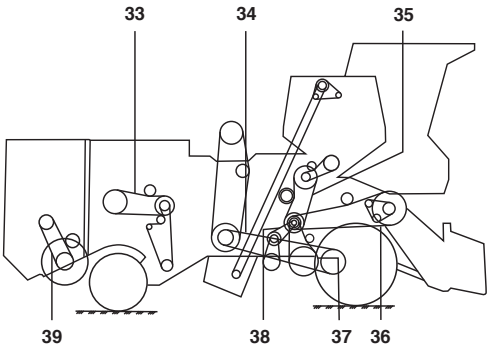

NIVA CK-5M-1-75(79)/77(81) (CONTINUED)

			OE	
1	REEL DRIVE VARIABLE SPEED	1	6201351	0110126
2	THRESHING DRUM VARIATOR DRIVE	1	6201258	2013220
3	MAIN COUNTERSHAFT DRIVE	4	6201256	0202332
4	CUTTING DRUM	2	6201348	1402532
5	AUGER DRIVE	2	6201355	2001190
6	AUGER (GRAIN)	1	6201347	0702272
7	COUNTER DRIVE MAIN (REAR)	1	6201354	2803403
8	PICK UP DRIVE	1	/	0302240
9	REEL DRIVE VARIABLE SPEED	1	6201351	0110126
10	THRESHING DRUM VARIATOR DRIVE	1	6201258	2013220
11	MAIN COUNTERSHAFT DRIVE	4	6201256	0202332
12	COUNTER DRIVE MAIN (REAR)	1	6201354	2803403
13	AUGER (GRAIN)	1	6201347	0702272
14	AUGER (GRAIN)	1	6201347	0702272
15	COUNTER DRIVE MAIN (REAR)	1	6201354	2803403
16	REEL DRIVE VARIABLE SPEED	1	6201351	0110126
17	THRESHING DRUM VARIATOR DRIVE	1	6201258	2013220
18	MAIN COUNTERSHAFT DRIVE	4	6201256	0202332
19	STACKER DRIVE	1	6201353	1903346
20	AUGER (GRAIN)	1	6201347	0702272
21	SHAKER SHAFT DRIVE	1	6201346	0302200
22	BEATER DRIVE	2	6201345	0202182
23	TILTED PLATFORM CHAMBER SHAFT (UPPER)	1	6201290	2603267
24	CLEANING SHAFT DRIVE	1	6201343	0402155
25	CLEANING FAN DRIVE	2	6201352	2502099
26	SHAKER SHAFT DRIVE	1	6201346	0302200
27	MECHANICAL DRIVE VARIATOR	1	6201255	1813327
28	BEATER DRIVE	2	6201345	0202182
29	TILTED PLATFORM CHAMBER SHAFT (UPPER)	1	6201290	2603267
30	CLEANING SHAFT DRIVE	1	6201343	0402155
31	CLEANING FAN DRIVE	2	6201352	2502099
32	SHAKER SHAFT DRIVE	1	6201346	0302200
33	MECHANICAL DRIVE VARIATOR	1	6201255	1813327
34	BEATER DRIVE	2	6201345	0202182
35	TILTED PLATFORM CHAMBER SHAFT (UPPER)	1	6201290	2603267
36	CLEANING SHAFT DRIVE	1	6201343	0402155
37	CLEANING FAN DRIVE	2	6201352	2502099
38	SHREDDER FAN DRIVE	2	6201344	0402170

RSM 161

			OE	
1		1	102030919	☎
2		1	101616643	0787324
3		1	101767796	2823241 EE-TECH
4		1	101767798	1423210
5		1	100237862	2319270
6		1	100758565	0137218
7		1	101616645	1118081
8		1	101747865	2826364
9		1	101743194	2023246
10		1	101616640	0724325 EE-TECH
11		1	101767792	1423396 EE-TECH
12		1	101475387	2853277
13		1	101762196	0300266
14		1	101616646	0337341
15		1	101859554	1623297 EE-TECH
16		1	101881035	2887324
17		1	101909697	0323191
18		1	101872236	1424560
19		1	101762228	1900095
20		1	100831575	☎
21		1	102200433	0225324 EE-TECH

VECTOR

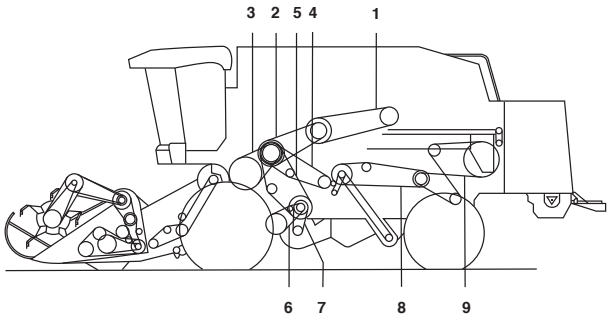

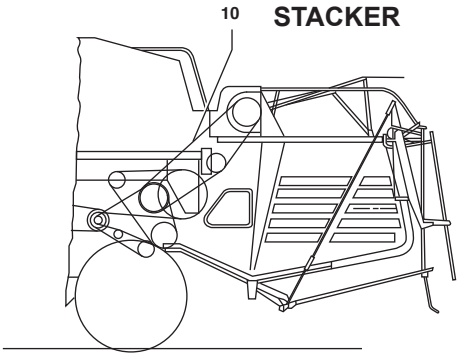

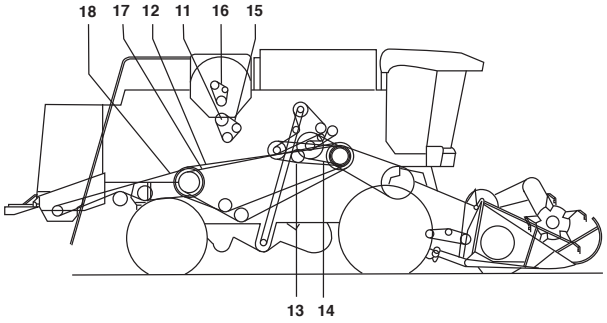

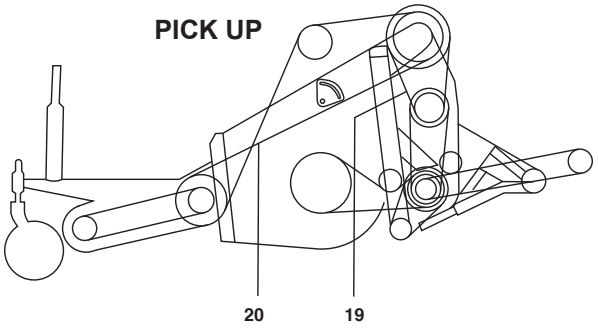

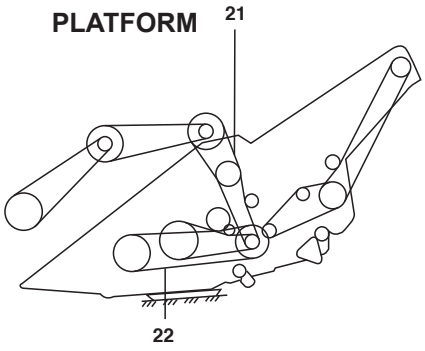

			OE	
1	MAIN COUNTERSHAFT DRIVE	1	6201016	0325301 EE-TECH
2	BEATER DRIVE	1	6201015	2826318 EE-TECH
3	DRUM DRIVE VARIABLE SPEED	1	6201246	2899383
4	FINAL THRESHING UNIT	1	6201272	0337304
5	CLEANING FAN - COUNTERSHAFT	1	6201297	1419300
6	CLEANING SHAFT DRIVE	2	6201269	1437204
7	CLEANING FAN DRIVE	1	6201273	2811136
8	ELEVATOR DRIVE UNIT	1	6201275	0337348
9	SHAKER SHAFT DRIVE	1	6201326	1902376
10	STRAW STACKER DRIVE	2	6201197	2619352

VECTOR (CONTINUED)

			OE	
11	TILTED PLATFORM CHAMBER SHAFT	1	6201251	2625326 EE-TECH
12	COUNTER DRIVE (REAR)	2	6201260	2819534
13	COUNTER DRIVE GRAIN	2	6201271	2319270
14	UNLOADING COUNTERDRIVE	2	6201254	1819202
15	DUST REMOVING FAN	2	6201028	0101105
16	AIR CONDITIONING COMPRESSOR DRIVE	2	6201327	0172220
17	CUTTING DRUM COUNTERDRIVE	2	6201260	2819534
18	CUTTING DRUM	2	6201017	2802439
19	SHAFT VARIATOR (UPPER)	1	6201273	2811136
20	PICK UP MAIN SHAFT	1	6201347	0702272
21	REEL DRIVE VARIABLE SPEED	1	6201273	2811136
22	CUTTING UNIT KNIFE	1	6201253	1519244

SAMPO ROSENLEW

3065

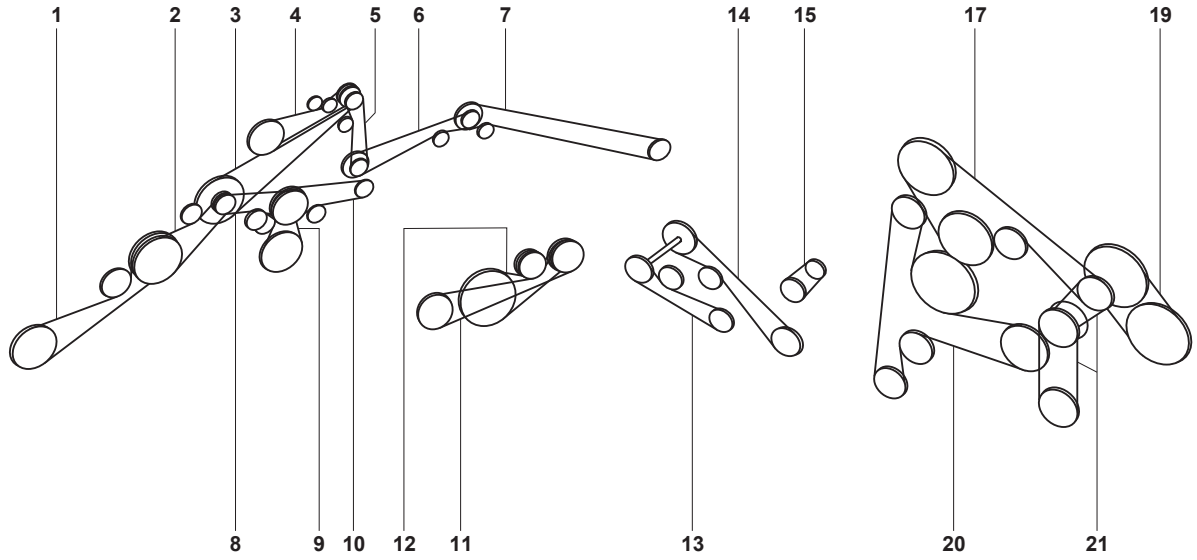

			OE	
1		2	615165	2002342
2		2	615164	0202222
3		1	619090	2024368
4		1	619082	2023246
5		1	619091	2023199
6		1	619092	2023280 EE-TECH
7		1	619096	1423476
8		1	615161	2002179
9		1	615162	2002167
10		1	615163	1202193
11		1	615167	0102231
12		1	615169	0102189
13		1	614217	2001129
14		1	614242	1601185
15		1	684120900	0372203
17		1	615139	2002279
19		1	619190	2013171
19		1	619191	2013164
20		1	619071	2005364
21		1	619181	2009158

3065 TS

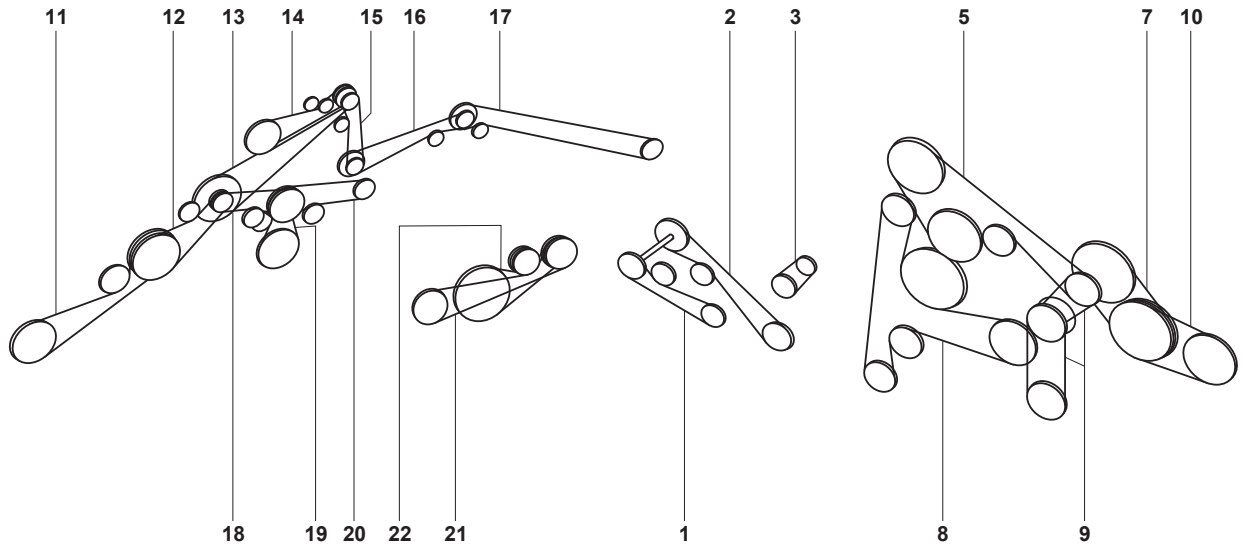

			OE	
1		1	614217	2001129
2		1	614242	1601185
3		1	684120900	0372203
5		1	615139	2002279
7		1	619190	2013171
7		1	619191	2013164
8		1	619071	2005364
9		1	619181	2009158
10		1	619077	2023197
11		2	615165	2002342
12		2	615142	2002279
13		1	619095	2025370
14		1	619082	2023246
15		1	619091	2023199
16		1	619092	2023280 EE-TECH
17		1	619096	1423476
18		1	615161	2002179
19		1	615162	2002167
20		1	615163	1202193
21		1	615167	0102231
22		1	615169	0102189

SAMPO ROSENLEW

3085

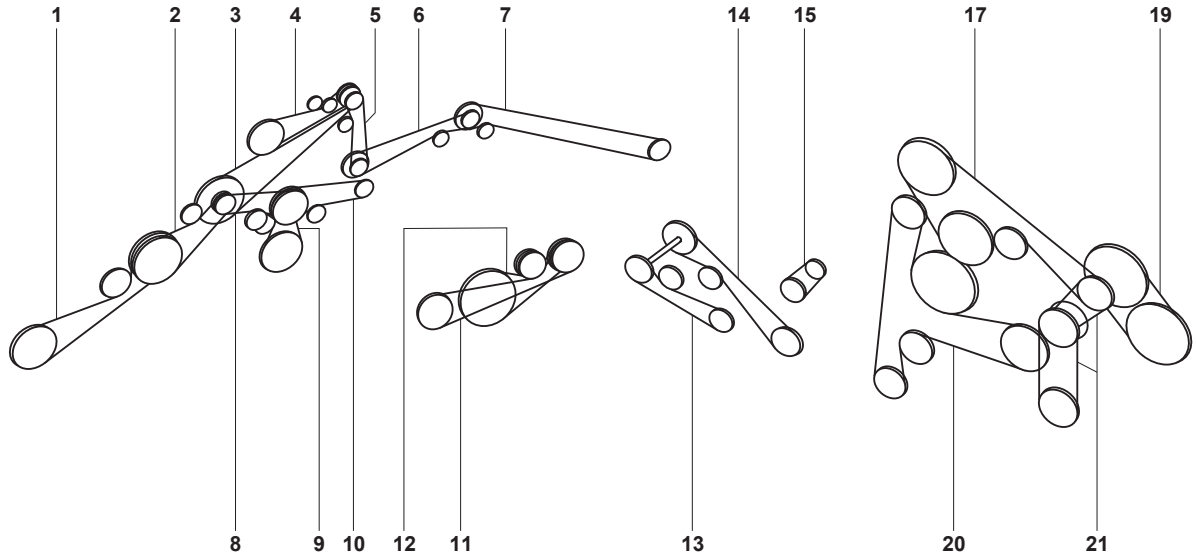

			OE	
1		2	615165	2002342
2		2	615164	0202222
3		1	619090	2024368
4		1	619082	2023246
5		1	619091	2023199
6		1	619092	2023280 EE-TECH
7		1	619096	1423476
8		1	615161	2002179
9		1	615162	2002167
10		1	615163	1202193
11		1	615167	0102231
12		1	615169	0102189
13		1	614217	2001129
14		1	614242	1601185
15		1	684120900	0372203
17		1	615139	2002279
19		1	619190	2013171
19		1	619191	2013164
20		1	619071	2005364
21		1	619181	2009158

3085 TS

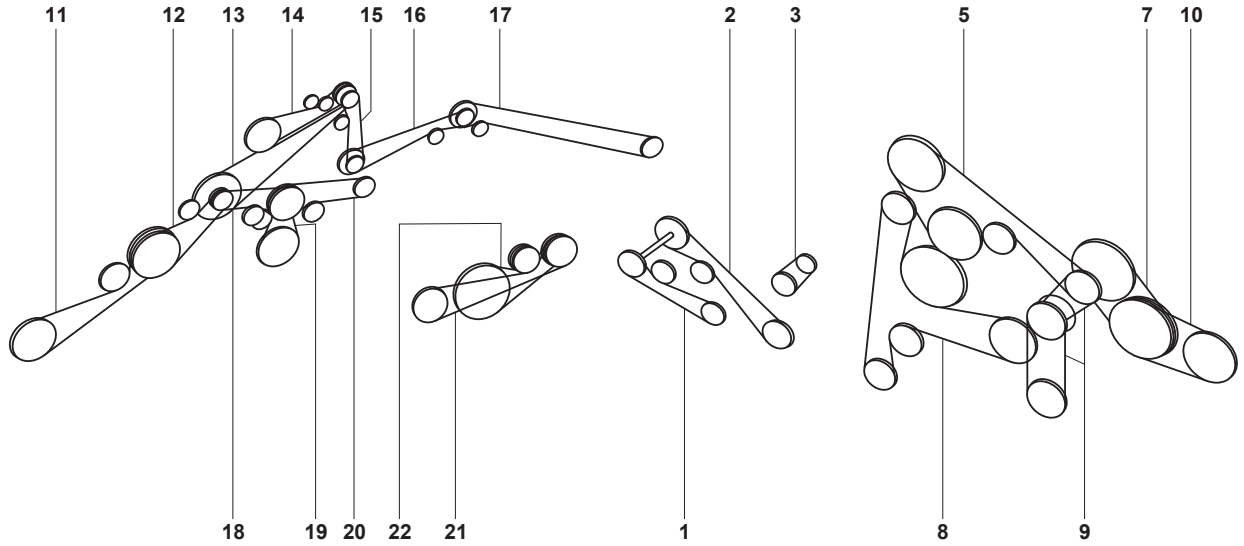

			OE	
1		1	614217	2001129
2		1	614242	1601185
3		1	684120900	0372203
5		1	615139	2002279
7		1	619190	2013171
7		1	619191	2013164
8		1	619071	2005364
9		1	619181	2009158
10		1	619077	2023197
11		2	615165	2002342
12		2	615142	2002279
13		1	619095	2025370
14		1	619082	2023246
15		1	619091	2023199
16		1	619092	2023280 EE-TECH
17		1	619096	1423476
18		1	615161	2002179
19		1	615162	2002167
20		1	615163	1202193
21		1	615167	0102231
22		1	615169	0102189

SAMPO ROSENLEW

COMIA

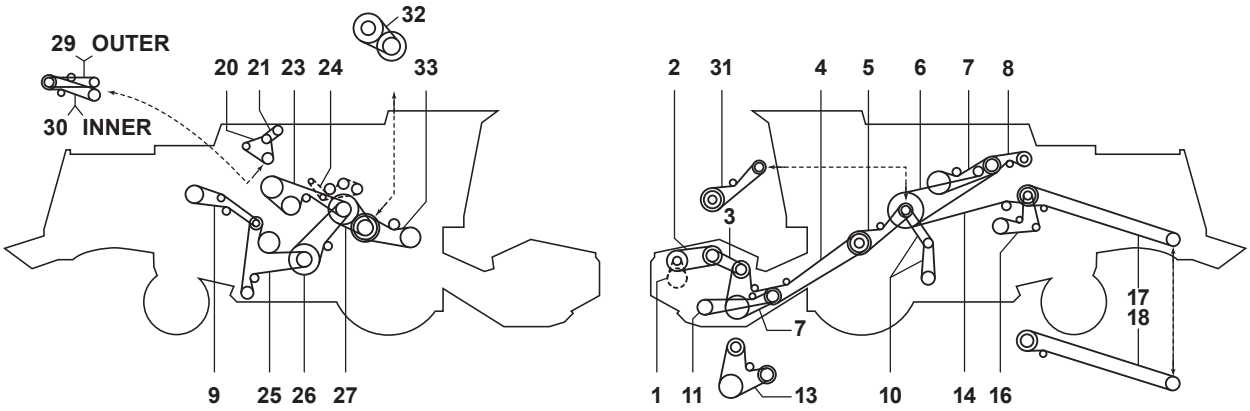

			OE	
1	REEL-DRIVE PICK UP	1	657101	Chain
2	REEL-DRIVE PICK UP, FRONT	1	614225	0101151
3	REEL-DRIVE PICK UP, REAR	1	615109	0202139
4	TABLE DRIVE	1	615184	2002298
5	TABLE DRIVE, ENGAGE MD	1	615124	0302197
5	TABLE DRIVE, ENGAGE TS	1	615182	2002253
6	THRESHING MECHANICAL ENGAGE	1	619090	2024368
7	FEEDER AUGER (DIA 450 MM.)	1	615135	0502215
7	GRAIN TANK UNLOADER	1	615135	0502215
8	HYDRAULIC PUMP	1	619087	2724161
9	CSP	1	657122	Chain
10	CLEANING FAN VARIATOR	1	614215	2001127
11	KNIFE DRIVE	1	615168	1902204
13	FEEDER AUGER (DIA 385 MM.)	1	615128	0202209
14	STRAW CHOPPER DRIVE, FRONT	1	615147	1902376
16	RETURN AUGER BEVEL GEAR	1	614242	1601185
17	STRAW CHOPPER DRIVE, REAR, STANDARD	1	615151	0402437
18	STRAW CHOPPER DRIVE, HIGH SPEED	1	619085	2023474
21	AIR CONDITIONING (CTA 3A)	1	613113	2017103
23	GRAIN ELEVATOR BEVEL GEAR	1	615139	2002279
24	GRAIN TANK UNLOADER	1	657110	Chain
25	STRAW WALKER DRIVE	1	619062	2004345
26	SHAKER SHOE DRIVE	1	614150	1401234
27	THRESHING CYLINDER (600 - 1300 RPM)	1	619192	0312169
29	ENGINE FAN DRIVE (OUTER)	1	614227	0301155
30	ENGINE FAN DRIVE (INNER)	1	614242	1601185
31	TABLE ENGAGE HD	1	619044	2010251
31	TABLE ENGAGE TS	1	619041	2010306
32	THRESHING CYLINDER (400 - 1150 RPM)	1	619191	2013164
33	PRE CYLINDER DRIVE	1	619077	2023197

KINCAID

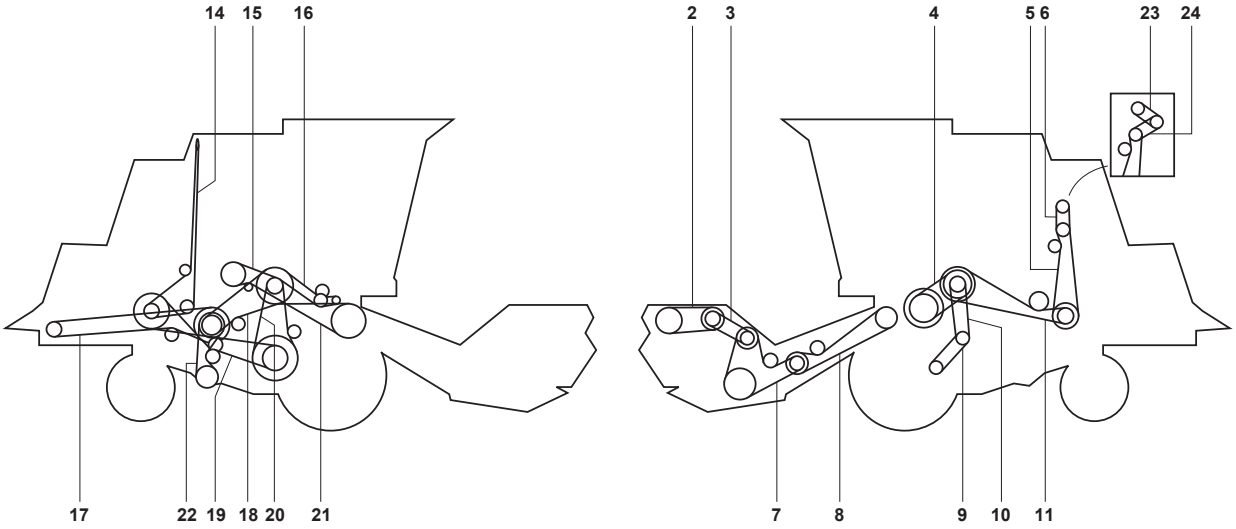

			OE	
2		1	614225	0101151
3		1	615109	0202139
4		1	619169	2013164
4		1	619173	2012156
5		1	619082	2023246
6		1	613116	0100083
7		1	615128	0202209
7		1	615135	0502215
8		1	615129	0302220
9		1	614115	1601103
10		1	614215	2001127
11		1	619065	2023280 EE-TECH
14		1	614166	1401378
14		1	619062	2004345
15		1	615108	0102125
16		1	614227	0301155
17		1	615159	0202310
18		1	615170	2002190
19		1	614260	0101287
20		1	614246	0101200
21		1	615124	0302197
22		1	614216	1901133
23		1	613101	☎
24		1	613107	☎

SR 310

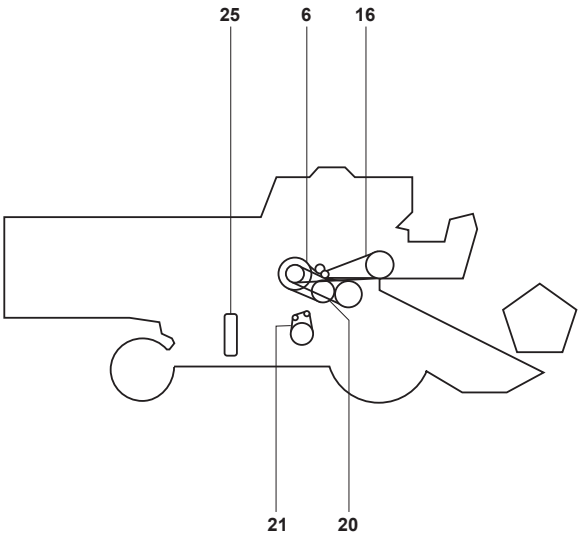

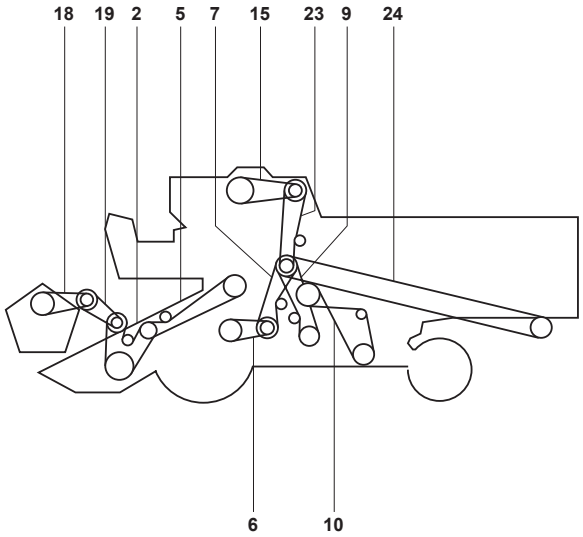

			OE	
2		1	614146	1601205
5		1	615131	1602240
6		2	619146	2013144
7		1	600843	☎
9		1	615123	0202182
10		1	614150	1401234
15		1	614134	0101158
16		1	615127	0202209
18		1	614127	1901136
19		1	614122	1601120
20		1	614141	0101184
21		2	493602	☎
23		1	614144	0101200
24		1	615160	☎

SR 360

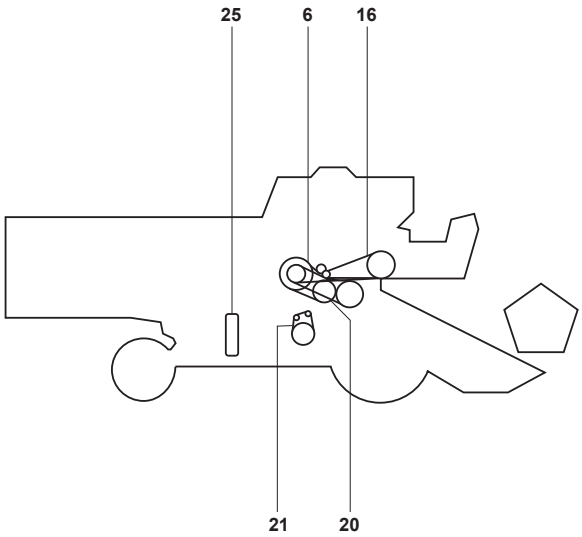

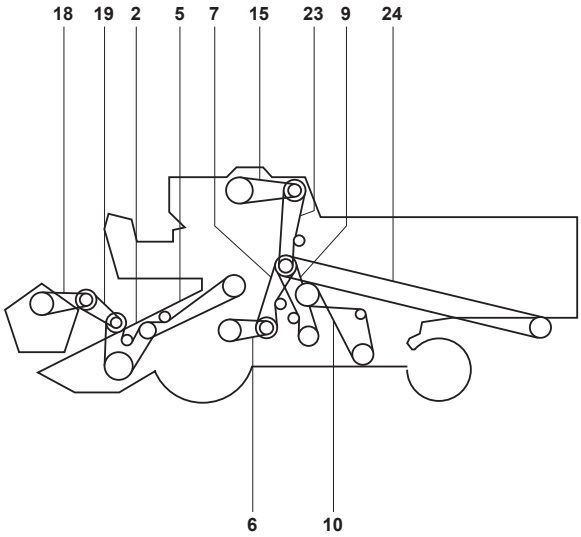

			OE	
2		1	614146	1601205
5		1	615131	1602240
6		2	619146	2013144
7		1	600843	☎
9		1	615123	0202182
10		1	614150	1401234
15		1	614134	0101158
16		1	615127	0202209
18		1	614127	1901136
19		1	614122	1601120
20		1	614141	0101184
21		2	493602	☎
23		1	614144	0101200
24		1	615160	☎

SAMPO ROSENLEW

SR 410

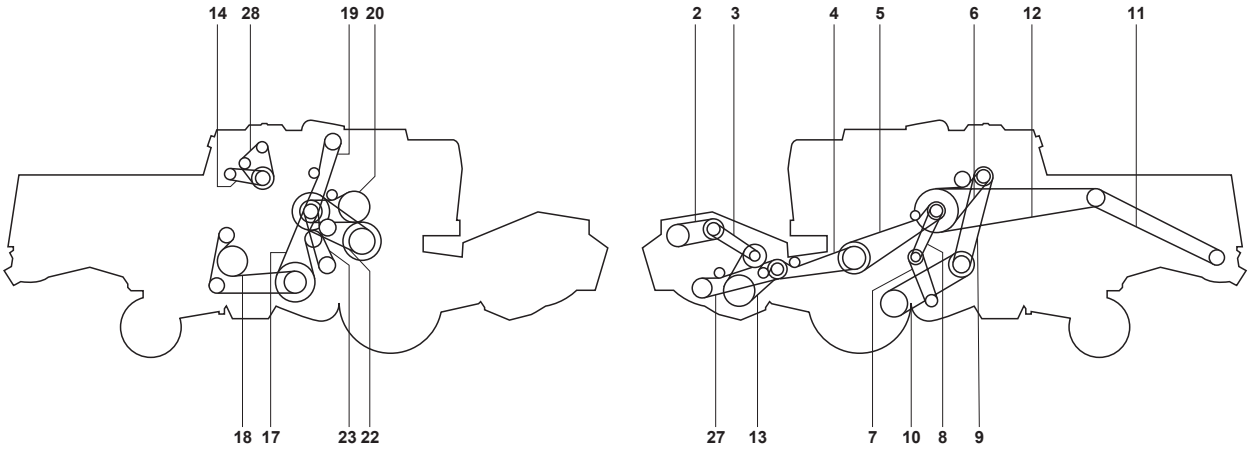

			OE	
2	SERIES 45-95	1	614127	1901136
2	SERIES 97	1	614132	2001146
3	SERIES 45-95	1	614122	1601120
3	SERIES 97	1	615108	0102125
4	SERIES 45-	1	615130	2002211
5	SERIES 45-	1	615133	0302251
6	SERIES 45-	1	619080	2024241 EE-TECH
7	SERIES 45-	1	614125	1401129
8	SERIES 45-	1	614125	1401129
9	SERIES 45-	1	619185	0111232
10	SERIES 45-	1	619185	0111232
11	SERIES 45-	1	615140	2002283
12	SERIES 45-	1	615150	0102406
13	SERIES 45-	1	614146	1601205
14	SERIES 45-	1	613124	1472236
17	SERIES 45-	1	614147	1601218
18	SERIES 45-	1	619059	2004311
19	SERIES 45-	1	614143	2001190
20	SERIES 45-	1	615121	0202172
22	SERIES 45-	1	619180	2013220
23	SERIES 45-96	1	614134	0101158
23	SERIES 97	1	614133	☎
27	SERIES 45-	1	615122	0302179

SR 460

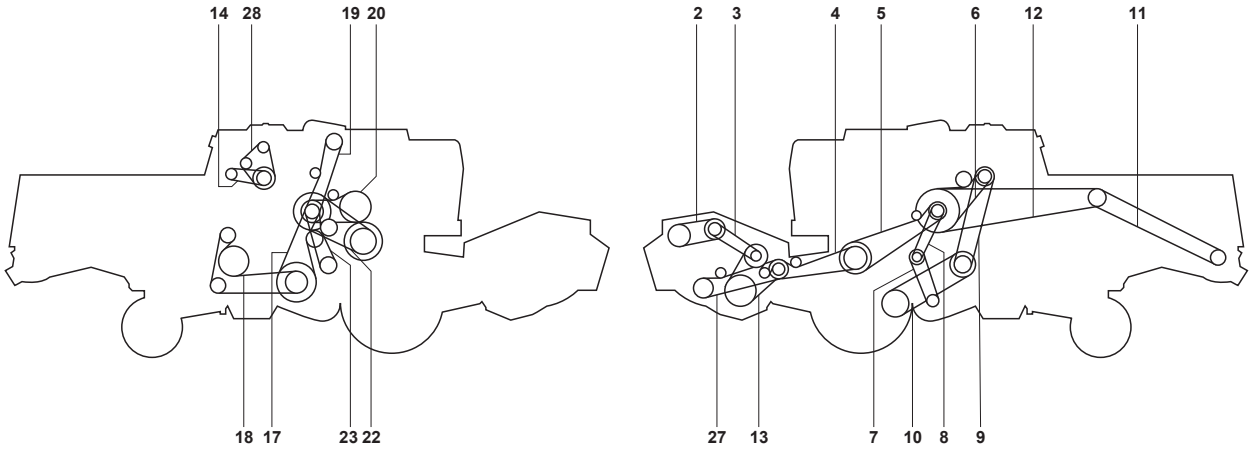

			OE	
2	SERIES 45-95	1	614127	1901136
2	SERIES 97	1	614132	2001146
3	SERIES 45-95	1	614122	1601120
3	SERIES 97	1	615108	0102125
4	SERIES 45-	1	615130	2002211
5	SERIES 45-	1	615133	0302251
6	SERIES 45-	1	619080	2024241 EE-TECH
7	SERIES 45-	1	614125	1401129
8	SERIES 45-	1	614125	1401129
9	SERIES 45-	1	619185	0111232
10	SERIES 45-	1	619185	0111232
11	SERIES 45-	1	615140	2002283
12	SERIES 45-	1	615150	0102406
13	SERIES 45-	1	614146	1601205
14	SERIES 45-	1	613124	1472236
17	SERIES 45-	1	614147	1601218
18	SERIES 45-	1	619059	2004311
19	SERIES 45-	1	614143	2001190
20	SERIES 45-	1	615121	0202172
22	SERIES 45-	1	619180	2013220
23	SERIES 45-96	1	614134	0101158
23	SERIES 97	1	614133	☎
27	SERIES 45-	1	615122	0302179

SAMPO ROSENLEW

SR 500

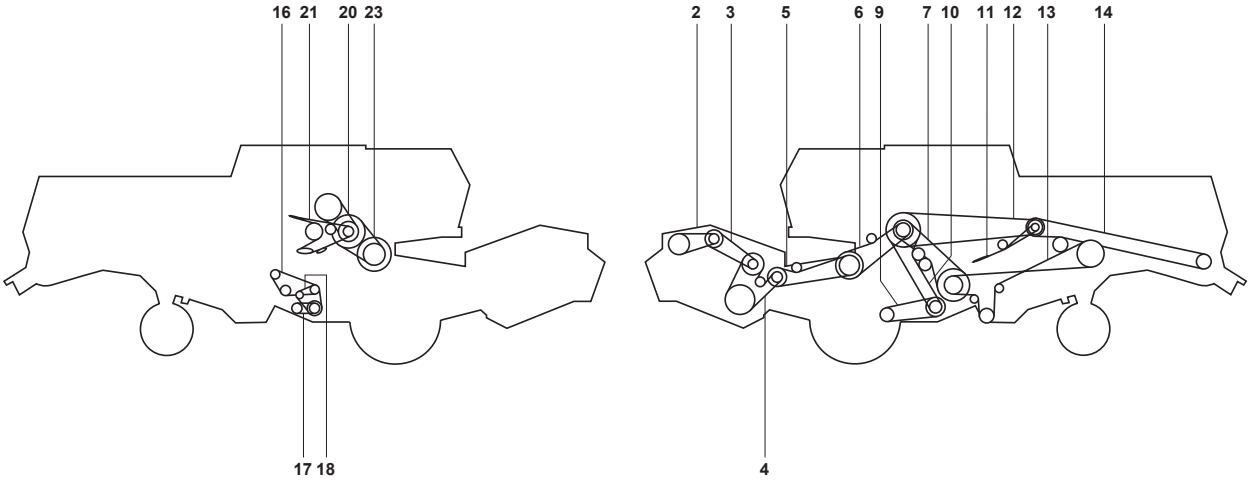

			OE	
2	110007-	1	614127	1901136
3	110007-110267	1	614122	1601120
3	113278-119269	1	614124	1401129
3	119279-	1	615110	2002135
4	110007-113268	1	614149	1401209
4	113278-	1	614147	1601218
5	110007-	1	615130	2002211
6	110007-	1	615124	0302197
7	110007-	1	614150	1401234
9	110007-	1	619170	0110162
10	110007-	1	619065	2023280 EE-TECH
11	110007-	1	614136	2001162
12	110007-	1	615146	1402336
13	110007-	1	614172	1401405
14	110007-	1	615147	1902376
16	110007-	1	613147	1400153
17	110007-	1	613116	0100083
20	110007-	1	615116	1602150
21	110007-	1	614152	0101242
23	110007-	1	619175	2012166

SR 580

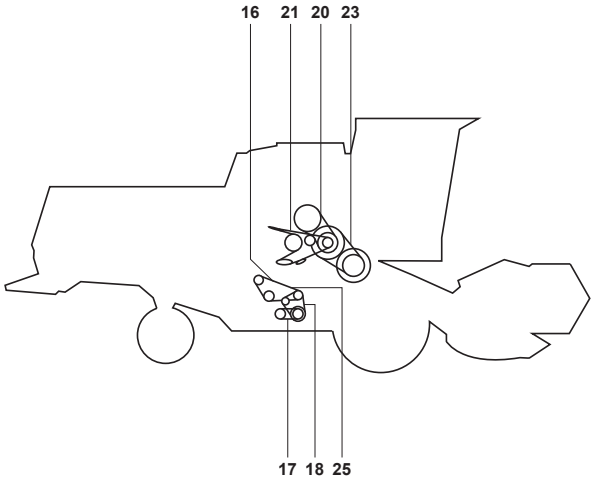

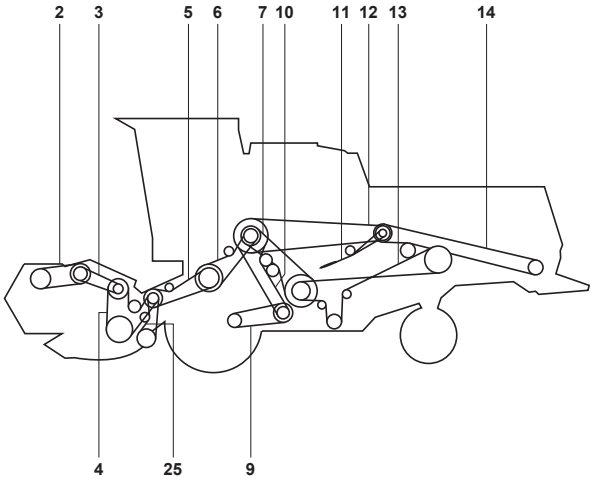

			OE	
2	-E11170	1	614126	1901133
2	E11171-	1	614225	0101151
3	-E11170	1	615110	2002135
3	E11171-	1	615109	0202139
4	-E11170	1	614147	1601218
4	E11171-	1	615180	2002228
5		1	615130	2002211
6		1	615124	0302197
7		1	614150	1401234
9		1	619170	0110162
10		1	619065	2023280 EE-TECH
11		1	614136	2001162
12		1	615146	1402336
13		1	614172	1401405
14		1	615147	1902376
16		1	613148	0100159
17		1	613116	0100083
20		1	615116	1602150
21		1	614152	0101242
23		1	619175	2012166
25	E11171-	1	615105	0902122

SAMPO ROSENLEW

SR 600

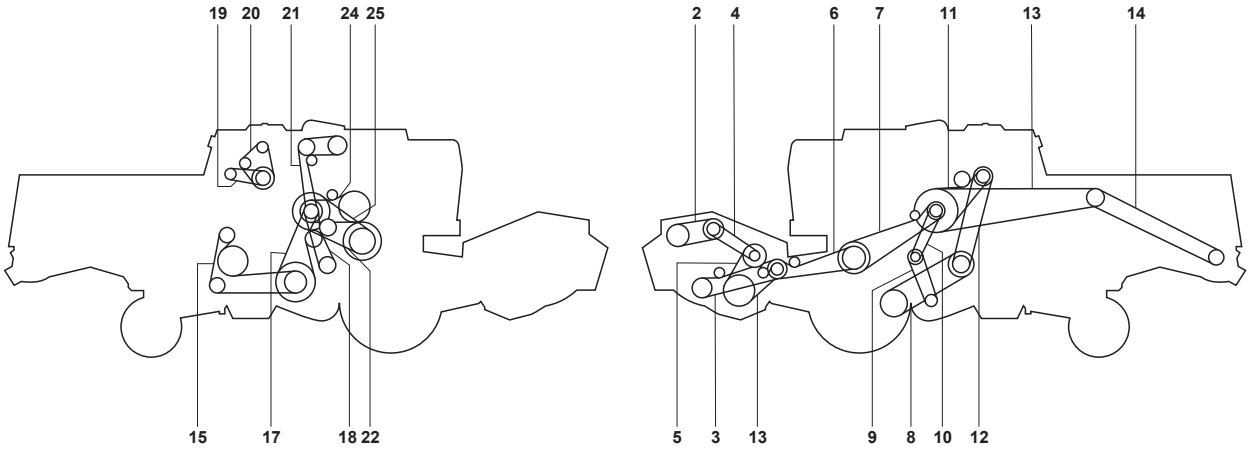

			OE	
2	510011-532544	1	614132	2001146
2	532554	1	614125	1401129
3		1	615122	0302179
4		1	615110	2002135
5	510011-518001	1	614148	0201215
5	518011-	1	615135	0502215
6		1	615130	2002211
7		1	615133	0302251
8		1	619185	0111232
9		1	614125	1401129
10		1	614125	1401129
11		1	619080	2024241 EE-TECH
12		1	619185	0111232
13		1	615150	0102406
14		1	615140	2002283
15		1	619059	2004311
17		1	614147	1601218
18		1	614131	1201153
19		1	613124	1472236
21		1	614152	0101242
24		1	615121	0202172
25		1	619180	2013220

SR 650

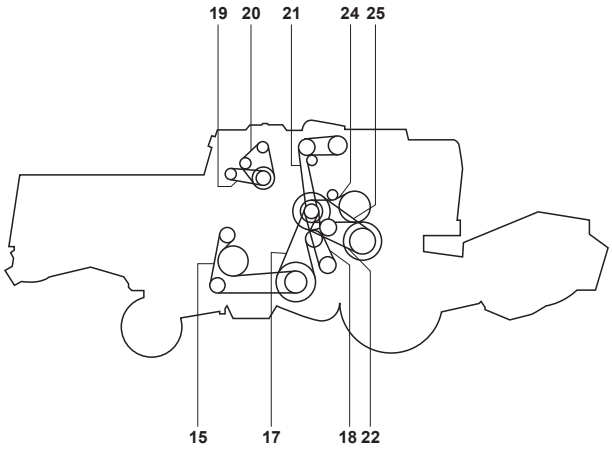

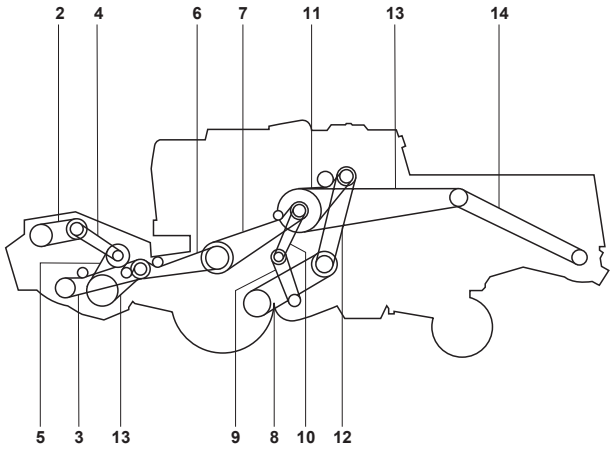

			OE	
2	510011-532544	1	614132	2001146
2	532554	1	614125	1401129
3		1	615122	0302179
4		1	615110	2002135
5	510011-518001	1	614148	0201215
5	518011-	1	615135	0502215
6		1	615130	2002211
7		1	615133	0302251
8		1	619185	0111232
9		1	614125	1401129
10		1	614125	1401129
11		1	619080	2024241 EE-TECH
12		1	619185	0111232
13		1	615150	0102406
14		1	615140	2002283
15		1	619059	2004311
17		1	614147	1601218
18		1	614131	1201153
19		1	613124	1472236
21		1	614152	0101242
24		1	615121	0202172
25		1	619180	2013220

SAMPO ROSENLEW

SR 680

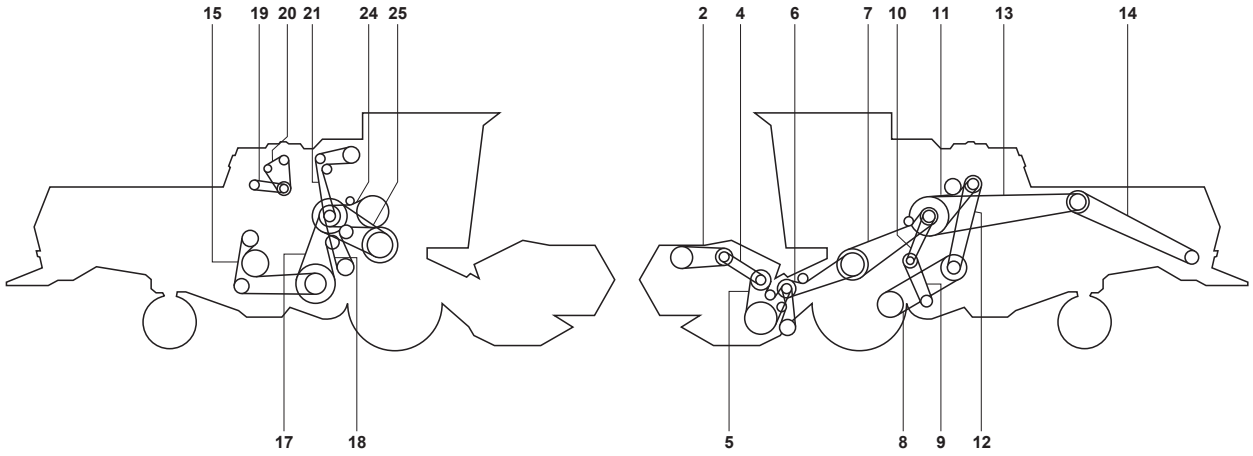

			OE	
2	-535648	1	614129	1401145
2	535649-	1	614225	0101151
3	-535648	1	615122	0302179
3	535649-	1	615105	0902122
4	-535648	1	615110	2002135
4	535649-536170	1	615109	0202139
4	536171-	1	615128	0202209
4	536171-	1	615109	0202139
5	-535648	1	615135	0502215
5	535649-536170	1	615180	2002228
5	535649-	1	615115	☎
6	-536170	1	615130	2002211
6	536171-	1	615179	0702225
7		1	615133	0302251
8		1	619185	0111232
9		1	614125	1401129
10		1	614125	1401129
11		1	619080	2024241 EE-TECH
12		1	619185	0111232
13		1	615150	0102406
14	-534770	1	615140	2002283
14	534771-535648	1	615141	2602287
14	535649-	1	615141	2602287
15		1	619059	2004311
17		1	614147	1601218
18	-535648	1	614131	1201153
18	535649-536020	1	614225	0101151
18	536021-	1	614224	0301147
19		1	613124	1472236
21		1	614152	0101242
24		1	615121	0202172
25		1	619180	2013220

SR 690

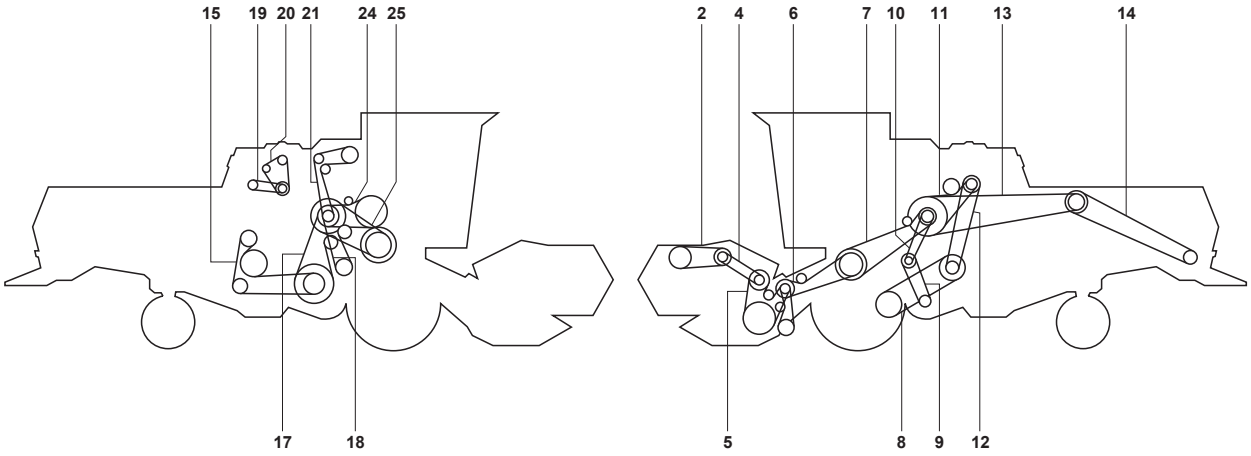

			OE	
2	-535648	1	614129	1401145
2	535649-	1	614225	0101151
3	-535648	1	615122	0302179
3	535649-	1	615105	0902122
4	-535648	1	615110	2002135
4	535649-536170	1	615109	0202139
4	536171-	1	615128	0202209
4	536171-	1	615109	0202139
5	-535648	1	615135	0502215
5	535649-536170	1	615180	2002228
5	535649-	1	615115	☎
6	-536170	1	615130	2002211
6	536171-	1	615179	0702225
7		1	615133	0302251
8		1	619185	0111232
9		1	614125	1401129
10		1	614125	1401129
11		1	619080	2024241 EE-TECH
12		1	619185	0111232
13		1	615150	0102406
14	-534770	1	615140	2002283
14	534771-535648	1	615141	2602287
14	535649-	1	615141	2602287
15		1	619059	2004311
17		1	614147	1601218
18	-535648	1	614131	1201153
18	535649-536020	1	614225	0101151
18	536021-	1	614224	0301147
19		1	613124	1472236
21		1	614152	0101242
24		1	615121	0202172
25		1	619180	2013220

SAMPO ROSENLEW

SR 2010

			OE	
2	REEL DRIVE (FRONT)	1	614225	0101151
3	REEL DRIVE (REAR)	1	615109	0202139
4	CYLINDER DRIVE	1	619169	2013164
5	HYDROSTATIC PUMP DRIVE	1	619081	0123239
6	HYDRAULIC PUMP DRIVE (A 42)	1	613116	0100083
7	FEEDER AUGER	1	615128	0202209
7	FEEDER AUGER	1	615135	0502215
8	TABLE DRIVE LEFT	1	615129	0302220
9	FAN DRIVE (LOWER)	1	614115	1601103
10	FAN DRIVE (UPPER)	1	614215	2001127
11	THRESHING DRIVE	1	619065	2023280 EE-TECH
12	AIR CONDITIONING COMPRESSOR DRIVE	1	613126	0200105
14	ELEVATOR DRIVE GRAIN	1	614166	1401378
14	ELEVATOR DRIVE GRAIN	1	619062	2004345
15	TANK UNLOADING (C61)	1	615108	0102125
16	TABLE CLEANING FAN (B79)	2	614227	0301155
17	STRAW CHOPPER (REAR)	1	615159	0202310
18	STRAW CHOPPER (FRONT)	1	615170	2002190
19	STRAW WALKER DRIVE	1	614260	0101287
20	SHAKER SHOE DRIVE	1	614246	0101200
21	TABLE DRIVE RIGHT	1	615124	0302197
21	TABLE DRIVE RIGHT	1	615173	0302200

SR 2020

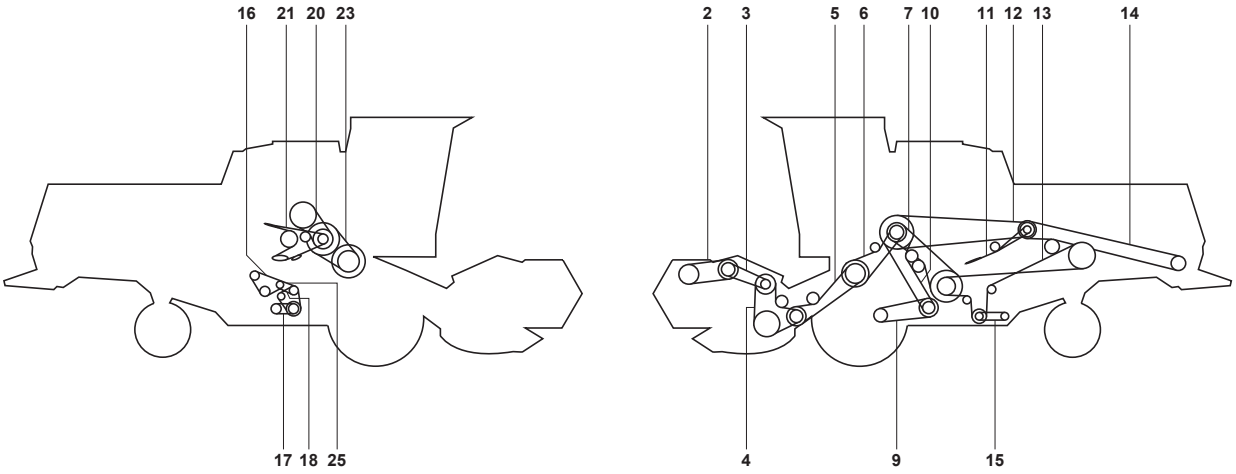

			OE	
2		1	614225	0101151
3		1	615109	0202139
4		1	615128	0202209
5		1	615179	0702225
6		1	615124	0302197
7		1	614150	1401234
9		1	619170	0110162
9		1	619054	2023212
10		1	619065	2023280 EE-TECH
11		1	614136	2001162
12		1	615146	1402336
13		1	614169	1501398
14		1	615147	1902376
16		1	613131	1200149
17		1	613116	0100083
20		1	615116	1602150
21		1	614152	0101242
23		1	619175	2012166

SAMPO ROSENLEW

SR 2025

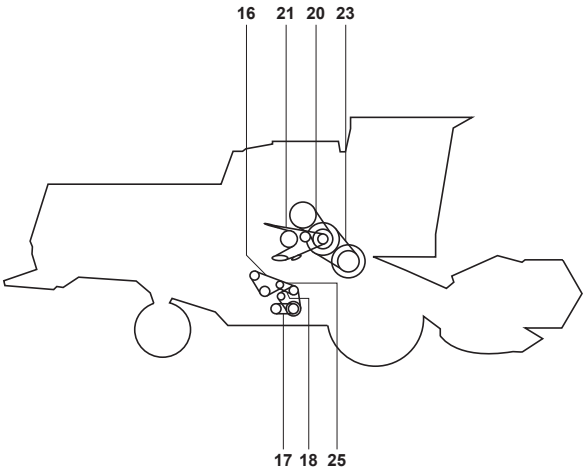

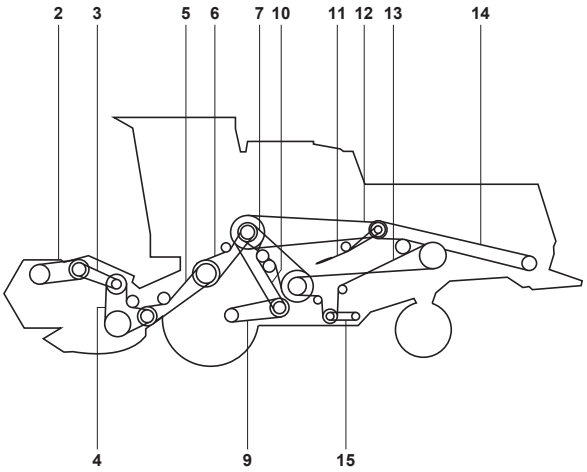

			OE	
2		1	614225	0101151
3		1	615109	0202139
4		1	615128	0202209
5		1	615179	0702225
6		1	615124	0302197
7		1	614150	1401234
9		1	619170	0110162
9		1	619054	2023212
10		1	619065	2023280 EE-TECH
11		1	614136	2001162
12		1	615146	1402336
13		1	614169	1501398
14		1	615147	1902376
16		1	613131	1200149
17		1	613116	0100083
20		1	615116	1602150
21		1	614152	0101242
23		1	619175	2012166

SR 2035 TS

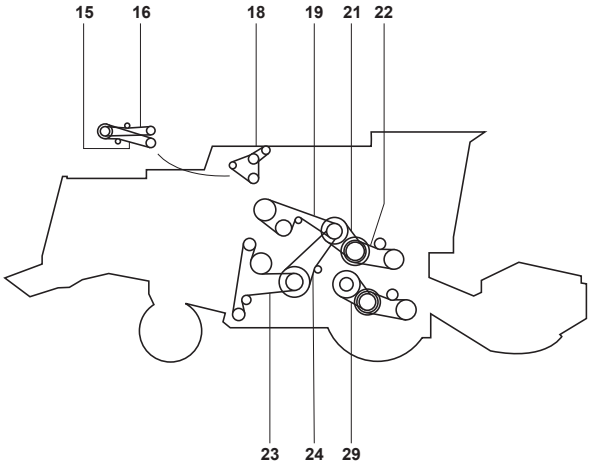

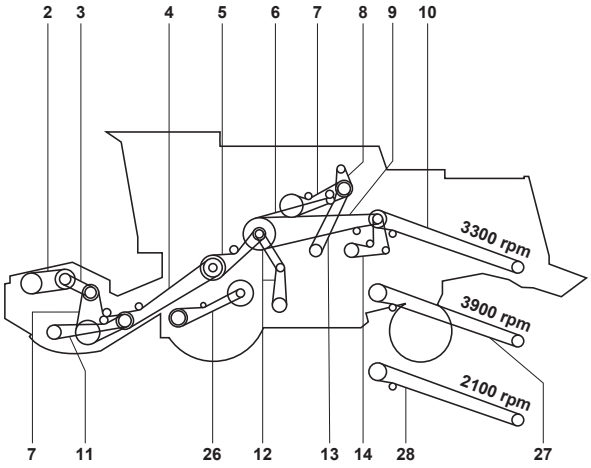

			OE	
2	PICK-UP REEL FRONT	1	614225	0101151
3	PICK-UP REEL REAR	1	615109	0202139
4	TABLE DRIVE	1	615184	2002298
5	TABLE ENGAGE	1	615182	2002253
6	THRESHING MECHANISM - ENGAGE	1	619090	2024368
7	GRAIN TANK UNLOAD DRIVE	1	615135	0502215
7	FEEDER AUGER 450	1	615135	0502215
8	WORKING HYDRAULIC PUMP	1	613122	1472227
9	STRAW CHOPPER FRONT	1	615147	1902376
10	STRAW CHOPPER REAR	1	615151	0402437
11	WB KNIFE DRIVE	1	615168	1902204
12	CLEANING FAN VARIATOR	2	614215	2001127
13	TRACTION HYDRAULIC PUMP	1	619080	2024241 EE-TECH
14	RETURN AUGER BEVEL GEAR	1	614242	1601185
15	ENGINE FAN DRIVE INNER	1	614222	2001143
15	ENGINE FAN DRIVE INNER	1	614224	0301147
15	ENGINE FAN DRIVE INNER	1	614226	0101151
16	ENGINE FAN DRIVE OUTER	1	614212	0201124
18	6-CYLINDER AIR CONDITION	1	684120900	0372203
19	GRAIN ELEVATOR BEVEL GEAR	1	615139	2002279
21	THRESHING CYLINDER	1	619192	0312169
22		1	619077	2023197
23	STRAW WALKER DRIVE	1	619062	2004345
24	SHAKER SHOE DRIVE	1	614150	1401234
26	TABLE ENGAGE	1	619041	2010306
27	STRAW CHOPPER REAR	1	619085	2023474
28	STRAW CHOPPER REAR	1	615190	0302419
29	THRESHING CYLINDER	1	619191	2013164

SAMPO ROSENLEW

SR 2035 XLS

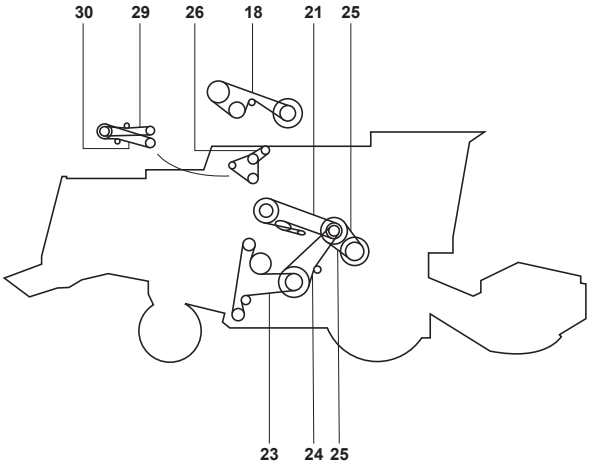

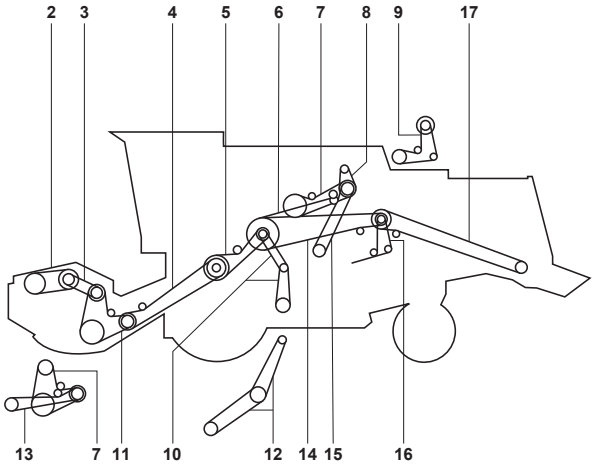

			OE	
2	PICK-UP REEL FRONT	1	614225	0101151
3	PICK-UP REEL REAR	1	615109	0202139
4	TABLE DRIVE	1	615184	2002298
5	TABLE ENGAGE	1	615124	0302197
6	THRESHING MECHANISM - ENGAGE	1	619090	2024368
7	FEEDER AUGER 450	1	615135	0502215
7	GRAIN TANK UNLOAD DRIVE	1	615135	0502215
8	WORKING HYDRAULIC PUMP	1	613122	1472227
9	RETURN AUGER BEVEL GEAR	1	614242	1601185
10	CLEANING FAN VARIATOR	2	614215	2001127
11	FEEDER AUGER 385	1	615128	0202209
12	TRACTION VARIATOR	2	619168	2012273
13	WB KNIFE DRIVE	1	615168	1902204
14	STRAW CHOPPER FRONT	1	615147	1902376
15	TRACTION HYDRAULIC PUMP	1	619080	2024241 EE-TECH
16	RETURN AUGER DIRECT DRIVE	1	614148	0201215
17	STRAW CHOPPER REAR	1	615155	1602396
18	GRAIN ELEVATOR BEVEL GEAR	1	615139	2002279
21	GRAIN ELEVATOR DIRECT DRIVE	1	615189	2619389
23	STRAW WALKER DRIVE	1	619062	2004345
24	SHAKER SHOE DRIVE	1	614150	1401234
25	THRESH CYLINDER (... - 555241)	1	619183	2012167
25	THRESH CYLINDER (555422)	1	619192	0312169
26	AIR CONDITION	1	613113	2017103
29	EGINE FAN DRIVE OUTER	1	614212	0201124
30	ENGINE FAN DRIVE INNER	1	614222	2001143
30	ENGINE FAN DRIVE INNER	1	614224	0301147

SR 2035 XL (... - 555421)

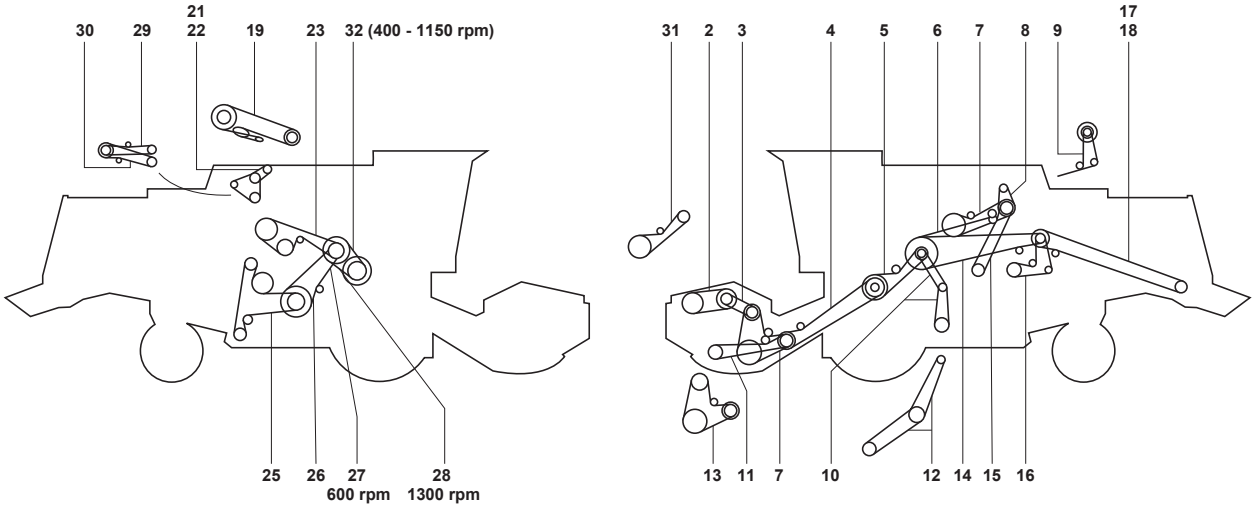

			OE	
2	PICK-UP REEL FRONT	1	614225	0101151
3	PICK-UP REEL REAR	1	615109	0202139
4	TABLE DRIVE	1	615184	2002298
5	TABLE ENGAGE	1	615124	0302197
6	THRESHING MECHANISM - ENGAGE	1	619090	2024368
7	FEEDER AUGER 450	1	615135	0502215
7	GRAIN TANK UNLOAD DRIVE	1	615135	0502215
8	WORKING HYDRAULIC PUMP	1	613122	1472227
9	RETURN AUGER DIRECT DRIVE	1	614148	0201215
10	CLEANING FAN VARIATOR	2	614215	2001127
11	WB KNIFE DRIVE	1	615168	1902204
12	TRACTION VARIATOR	2	619168	2012273
13	FEEDER AUGER 385	1	615128	0202209
14	STRAW CHOPPER FRONT	1	615147	1902376
15	TRACTION HYDRAULIC PUMP	1	619080	2024241 EE-TECH
16	RETURN AUGER BEVEL GEAR	1	614242	1601185
17	STRAW CHOPPER STANDARD SPEED	1	615151	0402437
18	STRAW CHOPPER HIGH SPEED	1	619085	2023474
19	GRAIN ELEVATOR DIRECT DRIVE	1	615189	2619389
21	4-CYLINDER AIR CONDITION	1	613113	2017103
22	6-CYLINDER AIR CONDITION	1	684120900	0372203
23	GRAIN ELEVATOR BEVEL GEAR	1	615139	2002279
25	STRAW WALKER DRIVE	1	619062	2004345
26	SHAKER SHOE DRIVE	1	614150	1401234
27	THRESHING CYLINDER	1	619183	2012167
28	THRESHING CYLINDER	1	619174	0112166
29	ENGINE FAN DRIVE OUTER	1	614212	0201124
30	ENGINE FAN DRIVE INNER	1	614222	2001143
31	TABLE ENGAGE	1	619044	2010251
32	THRESHING CYLINDER	1	619169	2013164

SAMPO ROSENLEW

SR 2035 XL (555422 - ...)

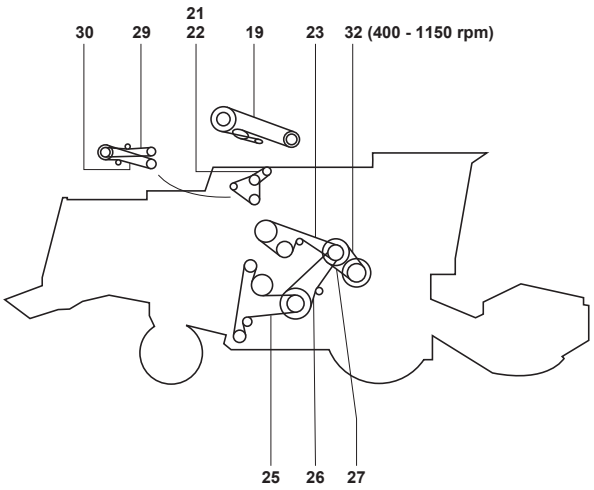

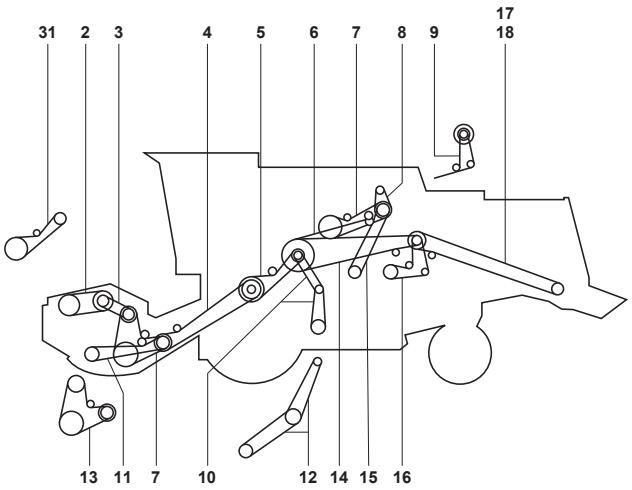

			OE	
2	PICK-UP REEL FRONT	1	614225	0101151
3	PICK-UP REEL REAR	1	615109	0202139
4	TABLE DRIVE	1	615184	2002298
5	TABLE ENGAGE	1	615124	0302197
6	THRESHING MECHANISM - ENGAGE	1	619090	2024368
7	FEEDER AUGER 450	1	615135	0502215
7	GRAIN TANK UNLOAD DRIVE	1	615135	0502215
8	WORKING HYDRAULIC PUMP	1	613122	1472227
9	RETURN AUGER DIRECT DRIVE	1	614148	0201215
10	CLEANING FAN VARIATOR	1	614215	2001127
11	WB KNIFE DRIVE	1	615168	1902204
12	TRACTION VARIATOR	1	619168	2012273
13	FEEDER AUGER 385	1	615128	0202209
14	STRAW CHOPPER FRONT	1	615147	1902376
15	TRACTION HYDRAULIC PUMP	1	619080	2024241 EE-TECH
16	RETURN AUGER BEVEL GEAR	1	614242	1601185
17	STRAW CHOPPER STANDARD SPEED	1	615151	0402437
18	STRAW CHOPPER HIGH SPEED	1	619085	2023474
19	GRAIN ELEVATOR DIRECT DRIVE	1	615189	2619389
21	4-CYLINDER AIR CONDITION	1	613113	2017103
22	6-CYLINDER AIR CONDITION	1	613104	0172201
23	GRAIN ELEVATOR BEVEL GEAR	1	615139	2002279
25	STRAW WALKER DRIVE	1	619062	2004345
26	SHAKER SHOE DRIVE	1	614150	1401234
27	THRESHING CYLINDER	1	619192	0312169
29	ENGINE FAN DRIVE OUTER	1	614212	0201124
30	ENGINE FAN DRIVE INNER	1	614222	2001143
30	ENGINE FAN DRIVE INNER	1	614224	0301147
30	ENGINE FAN DRIVE INNER	1	614226	0101151
31	TABLE ENGAGE	1	619044	2010251
32	THRESHING CYLINDER	1	619191	2013164

SR 2045 TS

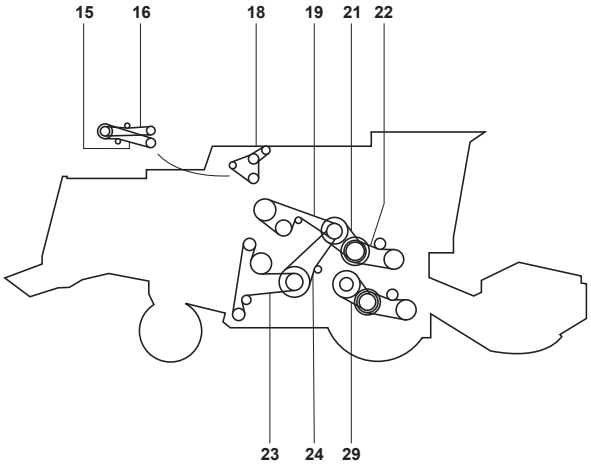

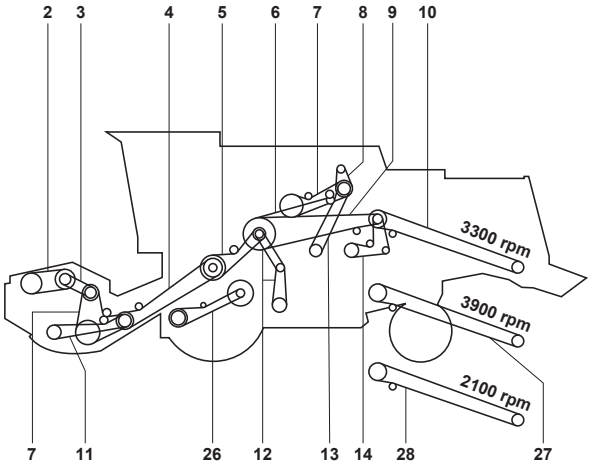

			OE	
2	PICK-UP REEL FRONT	1	614225	0101151
3	PICK-UP REEL REAR	1	615109	0202139
4	TABLE DRIVE	1	615184	2002298
5	TABLE ENGAGE	1	615182	2002253
6	THRESHING MECHANISM - ENGAGE	1	619090	2024368
7	GRAIN TANK UNLOAD DRIVE	1	615135	0502215
7	FEEDER AUGER 450	1	615135	0502215
8	WORKING HYDRAULIC PUMP	1	613122	1472227
9	STRAW CHOPPER FRONT	1	615147	1902376
10	STRAW CHOPPER REAR	1	615151	0402437
11	WB KNIFE DRIVE	1	615168	1902204
12	CLEANING FAN VARIATOR	2	614215	2001127
13	TRACTION HYDRAULIC PUMP	1	619080	2024241 EE-TECH
14	RETURN AUGER BEVEL GEAR	1	614242	1601185
15	ENGINE FAN DRIVE INNER	1	614222	2001143
15	ENGINE FAN DRIVE INNER	1	614224	0301147
15	ENGINE FAN DRIVE INNER	1	614226	0101151
16	ENGINE FAN DRIVE OUTER	1	614212	0201124
18	6-CYLINDER AIR CONDITION	1	684120900	0372203
19	GRAIN ELEVATOR BEVEL GEAR	1	615139	2002279
21	THRESHING CYLINDER	1	619192	0312169
22		1	619077	2023197
23	STRAW WALKER DRIVE	1	619062	2004345
24	SHAKER SHOE DRIVE	1	614150	1401234
26	TABLE ENGAGE	1	619041	2010306
27	STRAW CHOPPER REAR	1	619085	2023474
28	STRAW CHOPPER REAR	1	615190	0302419
29	THRESHING CYLINDER	1	619191	2013164

SAMPO ROSENLEW

SR 2045 XLS

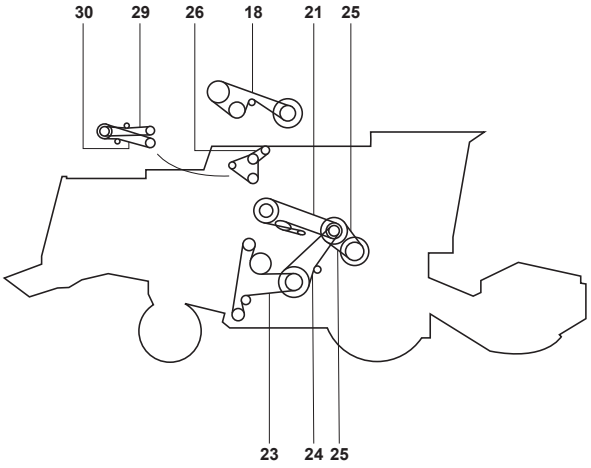

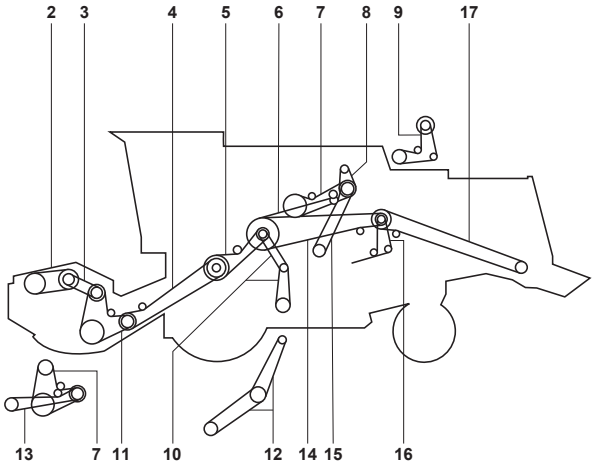

			OE	
2	PICK-UP REEL FRONT	1	614225	0101151
3	PICK-UP REEL REAR	1	615109	0202139
4	TABLE DRIVE	1	615184	2002298
5	TABLE ENGAGE	1	615124	0302197
6	THRESHING MECHANISM - ENGAGE	1	619090	2024368
7	FEEDER AUGER 450	1	615135	0502215
7	GRAIN TANK UNLOAD DRIVE	1	615135	0502215
8	WORKING HYDRAULIC PUMP	1	613122	1472227
9	RETURN AUGER BEVEL GEAR	1	614242	1601185
10	CLEANING FAN VARIATOR	2	614215	2001127
11	FEEDER AUGER 385	1	615128	0202209
12	TRACTION VARIATOR	2	619168	2012273
13	WB KNIFE DRIVE	1	615168	1902204
14	STRAW CHOPPER FRONT	1	615147	1902376
15	TRACTION HYDRAULIC PUMP	1	619080	2024241 EE-TECH
16	RETURN AUGER DIRECT DRIVE	1	614148	0201215
17	STRAW CHOPPER REAR	1	615155	1602396
18	GRAIN ELEVATOR BEVEL GEAR	1	615139	2002279
21	GRAIN ELEVATOR DIRECT DRIVE	1	615189	2619389
23	STRAW WALKER DRIVE	1	619062	2004345
24	SHAKER SHOE DRIVE	1	614150	1401234
25	THRESH CYLINDER (... - 555241)	1	619183	2012167
25	THRESH CYLINDER (555422)	1	619192	0312169
26	AIR CONDITION	1	613113	2017103
29	EGINE FAN DRIVE OUTER	1	614212	0201124
30	ENGINE FAN DRIVE INNER	1	614222	2001143
30	ENGINE FAN DRIVE INNER	1	614224	0301147

SR 2045 XL (... - 555421)

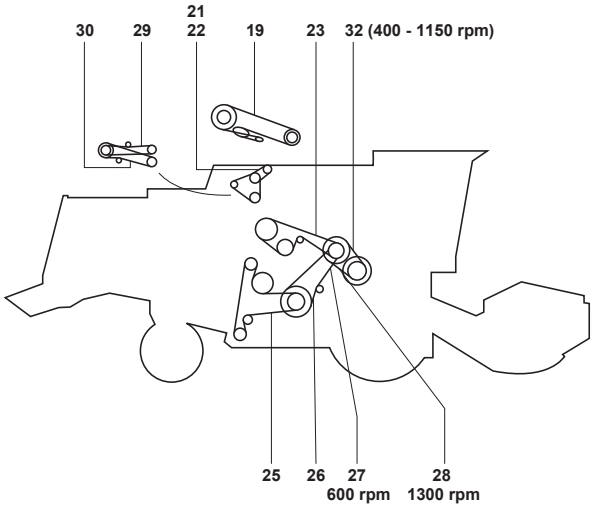

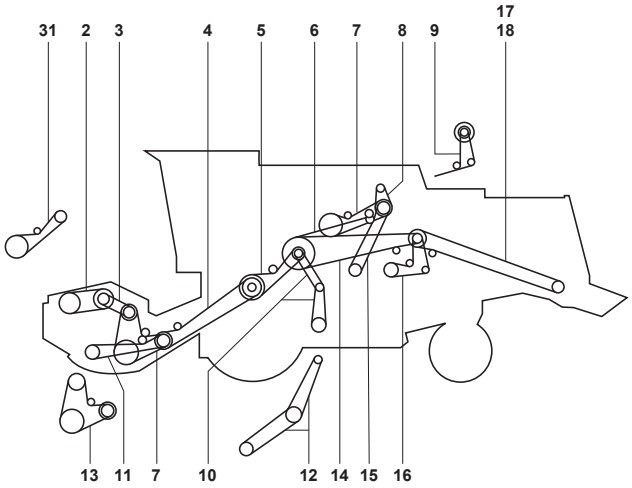

			OE	
2	PICK-UP REEL FRONT	1	614225	0101151
3	PICK-UP REEL REAR	1	615109	0202139
4	TABLE DRIVE	1	615184	2002298
5	TABLE ENGAGE	1	615124	0302197
6	THRESHING MECHANISM - ENGAGE	1	619090	2024368
7	FEEDER AUGER 450	1	615135	0502215
7	GRAIN TANK UNLOAD DRIVE	1	615135	0502215
8	WORKING HYDRAULIC PUMP	1	613122	1472227
9	RETURN AUGER DIRECT DRIVE	1	614148	0201215
10	CLEANING FAN VARIATOR	2	614215	2001127
11	WB KNIFE DRIVE	1	615168	1902204
12	TRACTION VARIATOR	2	619168	2012273
13	FEEDER AUGER 385	1	615128	0202209
14	STRAW CHOPPER FRONT	1	615147	1902376
15	TRACTION HYDRAULIC PUMP	1	619080	2024241 EE-TECH
16	RETURN AUGER BEVEL GEAR	1	614242	1601185
17	STRAW CHOPPER STANDARD SPEED	1	615151	0402437
18	STRAW CHOPPER HIGH SPEED	1	619085	2023474
19	GRAIN ELEVATOR DIRECT DRIVE	1	615189	2619389
21	4-CYLINDER AIR CONDITION	1	613113	2017103
22	6-CYLINDER AIR CONDITION	1	684120900	0372203
23	GRAIN ELEVATOR BEVEL GEAR	1	615139	2002279
25	STRAW WALKER DRIVE	1	619062	2004345
26	SHAKER SHOE DRIVE	1	614150	1401234
27	THRESHING CYLINDER	1	619183	2012167
28	THRESHING CYLINDER	1	619174	0112166
29	ENGINE FAN DRIVE OUTER	1	614212	0201124
30	ENGINE FAN DRIVE INNER	1	614222	2001143
31	TABLE ENGAGE	1	619044	2010251
32	THRESHING CYLINDER	1	619169	2013164

SAMPO ROSENLEW

SR 2045 XL (555422 - ...)

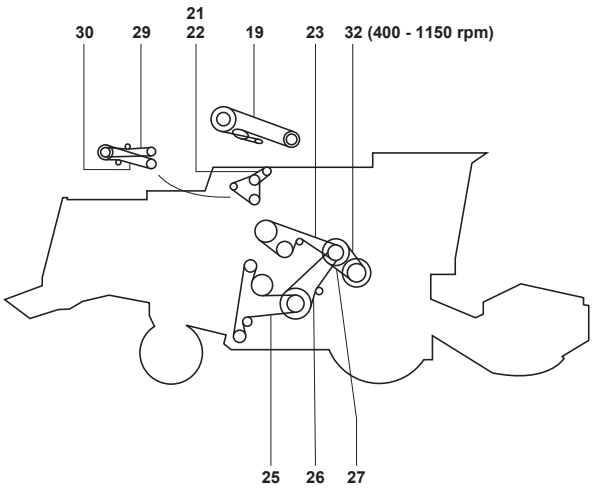

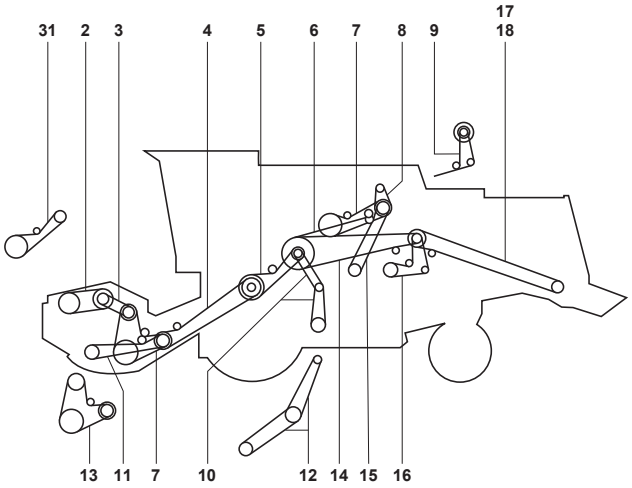

			OE	
2	PICK-UP REEL FRONT	1	614225	0101151
3	PICK-UP REEL REAR	1	615109	0202139
4	TABLE DRIVE	1	615184	2002298
5	TABLE ENGAGE	1	615124	0302197
6	THRESHING MECHANISM - ENGAGE	1	619090	2024368
7	FEEDER AUGER 450	1	615135	0502215
7	GRAIN TANK UNLOAD DRIVE	1	615135	0502215
8	WORKING HYDRAULIC PUMP	1	613122	1472227
9	RETURN AUGER DIRECT DRIVE	1	614148	0201215
10	CLEANING FAN VARIATOR	1	614215	2001127
11	WB KNIFE DRIVE	1	615168	1902204
12	TRACTION VARIATOR	1	619168	2012273
13	FEEDER AUGER 385	1	615128	0202209
14	STRAW CHOPPER FRONT	1	615147	1902376
15	TRACTION HYDRAULIC PUMP	1	619080	2024241 EE-TECH
16	RETURN AUGER BEVEL GEAR	1	614242	1601185
17	STRAW CHOPPER STANDARD SPEED	1	615151	0402437
18	STRAW CHOPPER HIGH SPEED	1	619085	2023474
19	GRAIN ELEVATOR DIRECT DRIVE	1	615189	2619389
21	4-CYLINDER AIR CONDITION	1	613113	2017103
22	6-CYLINDER AIR CONDITION	1	613104	0172201
23	GRAIN ELEVATOR BEVEL GEAR	1	615139	2002279
25	STRAW WALKER DRIVE	1	619062	2004345
26	SHAKER SHOE DRIVE	1	614150	1401234
27	THRESHING CYLINDER	1	619192	0312169
29	ENGINE FAN DRIVE OUTER	1	614212	0201124
30	ENGINE FAN DRIVE INNER	1	614222	2001143
30	ENGINE FAN DRIVE INNER	1	614224	0301147
30	ENGINE FAN DRIVE INNER	1	614226	0101151
31	TABLE ENGAGE	1	619044	2010251
32	THRESHING CYLINDER	1	619191	2013164

SR 2050 (... - 1995) HYDR

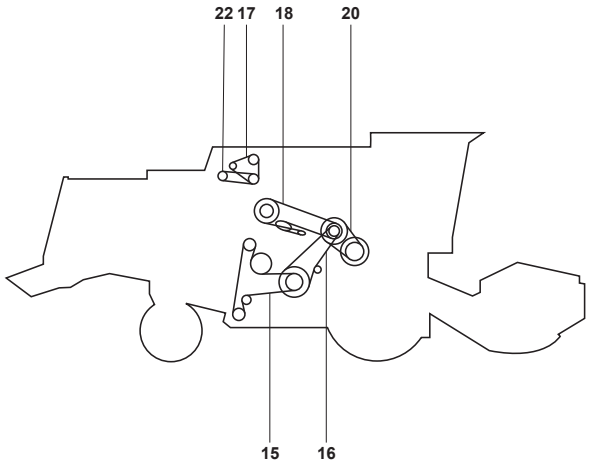

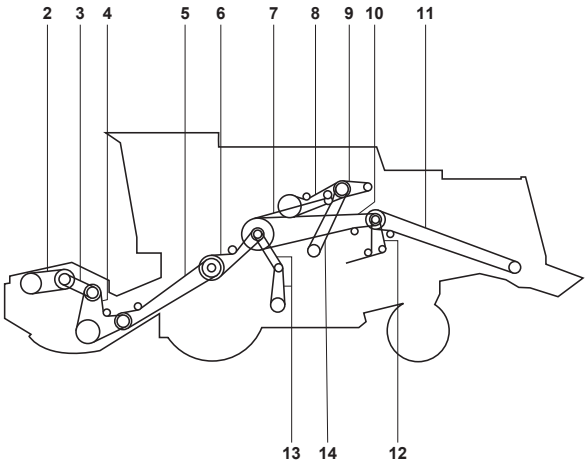

			OE	
2		1	614225	0101151
3		1	615109	0202139
4		1	615128	0202209
5		1	615184	2002298
6		1	615124	0302197
7		1	619090	2024368
8		1	615135	0502215
9		1	613128	0372244
10		1	615147	1902376
11		1	615151	0402437
12		1	614148	0201215
13		2	614215	2001127
14	HYDRAULIC DRIVE	1	619080	2024241 EE-TECH
14	MECHANICAL DRIVE	1	619168	2012273
15		1	619062	2004345
16		1	614150	1401234
18	-550651	1	615187	1902351
18	550652-	1	619070	2005364
20		1	619175	2012166
21		1	619169	2013164
22	-550320 / OPTIONAL EQUIPMENT	1	613124	1472236
22	550321 / OPTIONAL EQUIPMENT	1	613126	0200105

SR 2050 (1996 - 2002) HYDR

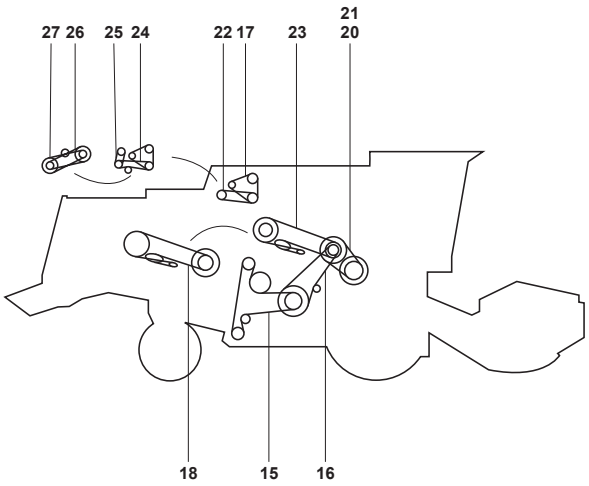

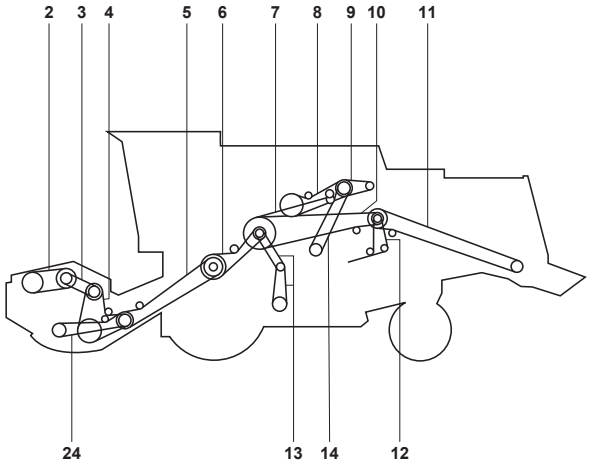

			OE	
2		1	614225	0101151
3		1	615109	0202139
4		1	615128	0202209
5		1	615184	2002298
6	22MM	1	615124	0302197
6	32MM	1	619044	2010251
7		1	619090	2024368
8		1	615135	0502215
9	-552068	1	613122	1472227
9	552067-	1	613128	0372244
10		1	615147	1902376
11	177CM - 3300RPM	1	615151	0402437
11	147CM - 3300RPM	1	615155	1602396
11	177CM - 2100RPM	1	615190	0302419
11	HIGH SPEED (3900RPM)	1	619085	2023474
12		1	614148	0201215
13		1	614215	2001127
14	HYDRAULIC DRIVE	1	619080	2024241 EE-TECH
14	MECHANICAL DRIVE	1	619168	2012273
15		1	619062	2004345
16		1	614150	1401234
18	-550651	1	615187	1902351
18	551912	1	615189	2619389
18	-551911	1	619070	2005364
20		1	619174	0112166
20		1	619183	2012167
21		1	619169	2013164
22	-550320 / OPTIONAL EQUIPMENT	1	613124	1472236
22	550321 / OPTIONAL EQUIPMENT	1	613126	0200105
23	551946 / GRAIN TANK	1	615139	2002279
24	P5010	1	615168	1902204

SR 2055 (... - 1995) HYDR

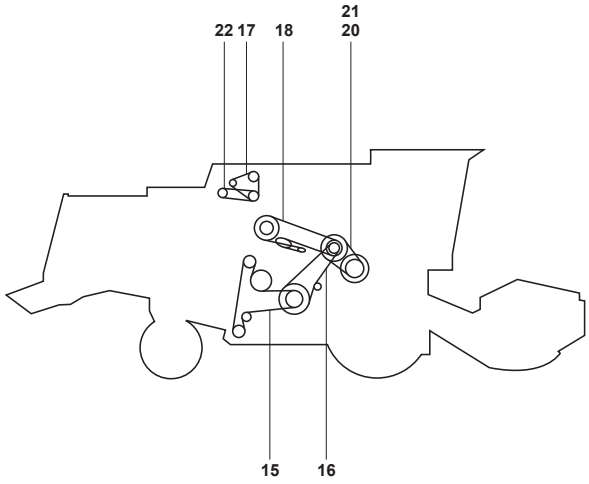

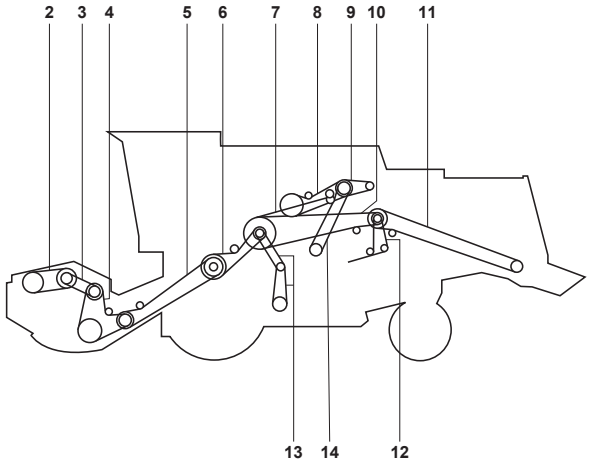

			OE	
2		1	614225	0101151
3		1	615109	0202139
4		1	615128	0202209
5		1	615184	2002298
6		1	615124	0302197
7		1	619090	2024368
8		1	615135	0502215
9		1	613128	0372244
10		1	615147	1902376
11		1	615151	0402437
12		1	614148	0201215
13		2	614215	2001127
14	HYDRAULIC DRIVE	1	619080	2024241 EE-TECH
14	MECHANICAL DRIVE	1	619168	2012273
15		1	619062	2004345
16		1	614150	1401234
18	-550651	1	615187	1902351
18	550652-	1	619070	2005364
20		1	619175	2012166
21		1	619169	2013164
22	-550320 / OPTIONAL EQUIPMENT	1	613124	1472236
22	550321 / OPTIONAL EQUIPMENT	1	613126	0200105

SR 2055 (1996 - 2002) HYDR

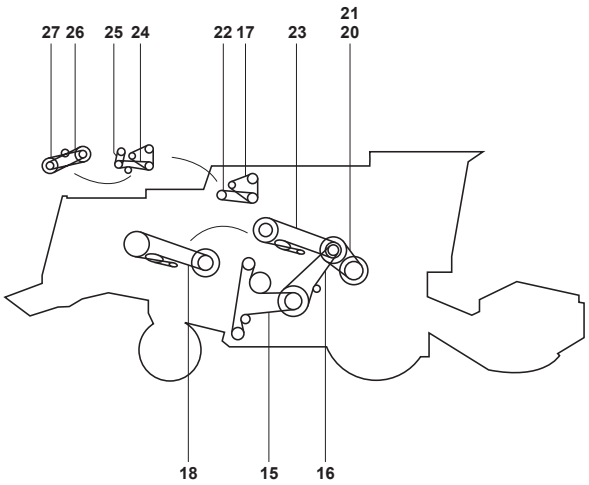

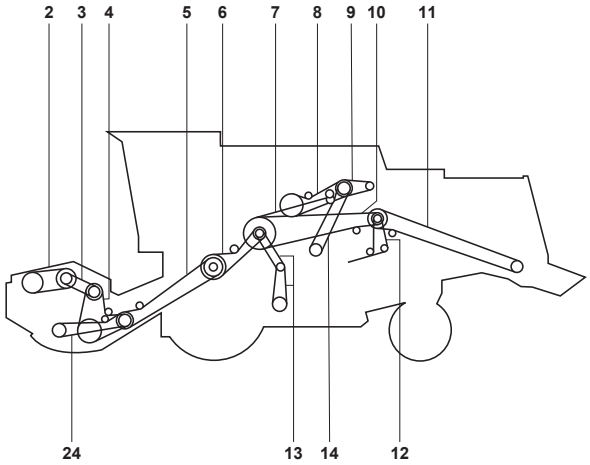

			OE	
2		1	614225	0101151
3		1	615109	0202139
4		1	615128	0202209
5		1	615184	2002298
6	22MM	1	615124	0302197
6	32MM	1	619044	2010251
7		1	619090	2024368
8		1	615135	0502215
9	-552068	1	613122	1472227
9	552067-	1	613128	0372244
10		1	615147	1902376
11	177CM - 3300RPM	1	615151	0402437
11	147CM - 3300RPM	1	615155	1602396
11	177CM - 2100RPM	1	615190	0302419
11	HIGH SPEED (3900RPM)	1	619085	2023474
12		1	614148	0201215
13		1	614215	2001127
14	HYDRAULIC DRIVE	1	619080	2024241 EE-TECH
14	MECHANICAL DRIVE	1	619168	2012273
15		1	619062	2004345
16		1	614150	1401234
18	-550651	1	615187	1902351
18	551912	1	615189	2619389
18	-551911	1	619070	2005364
20		1	619174	0112166
20		1	619183	2012167
21		1	619169	2013164
22	-550320 / OPTIONAL EQUIPMENT	1	613124	1472236
22	550321 / OPTIONAL EQUIPMENT	1	613126	0200105
23	551946 / GRAIN TANK	1	615139	2002279
24	P5010	1	615168	1902204

SR 2065 (... - 1995) HYDR

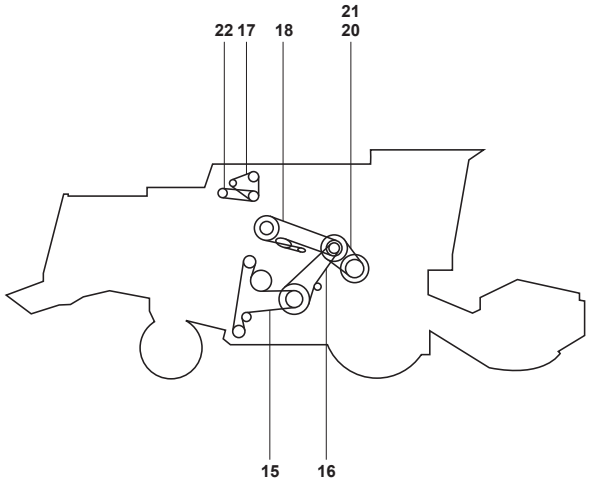

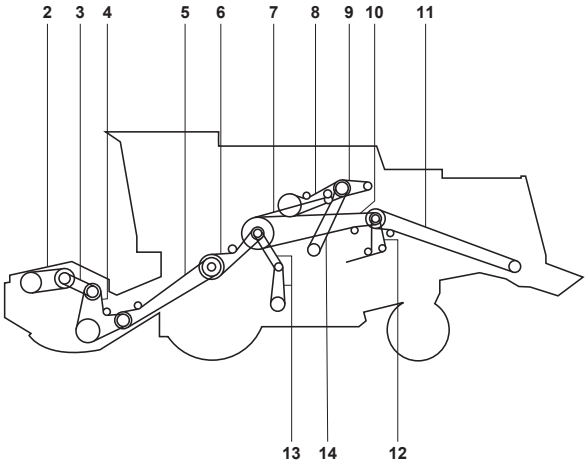

			OE	
2		1	614225	0101151
3		1	615109	0202139
4		1	615128	0202209
5		1	615184	2002298
6		1	615124	0302197
7		1	619090	2024368
8		1	615135	0502215
9		1	613128	0372244
10		1	615147	1902376
11		1	615151	0402437
12		1	614148	0201215
13		2	614215	2001127
14	HYDRAULIC DRIVE	1	619080	2024241 EE-TECH
14	MECHANICAL DRIVE	1	619168	2012273
15		1	619062	2004345
16		1	614150	1401234
18	-550651	1	615187	1902351
18	550652-	1	619070	2005364
20		1	619175	2012166
21		1	619169	2013164
22	-550320 / OPTIONAL EQUIPMENT	1	613124	1472236
22	550321 / OPTIONAL EQUIPMENT	1	613126	0200105

SR 2065 (1996 - 2002) HYDR

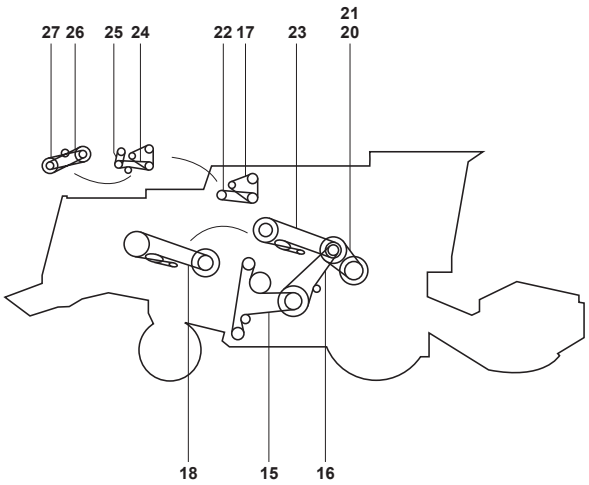

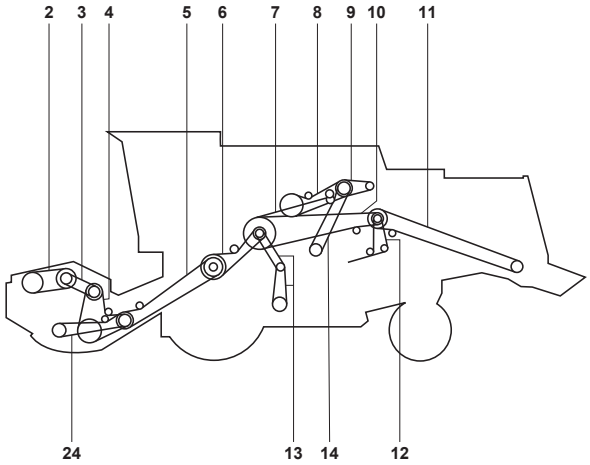

			OE	
2		1	614225	0101151
3		1	615109	0202139
4		1	615128	0202209
5		1	615184	2002298
6	22MM	1	615124	0302197
6	32MM	1	619044	2010251
7		1	619090	2024368
8		1	615135	0502215
9	-552068	1	613122	1472227
9	552067-	1	613128	0372244
10		1	615147	1902376
11	177CM - 3300RPM	1	615151	0402437
11	147CM - 3300RPM	1	615155	1602396
11	177CM - 2100RPM	1	615190	0302419
11	HIGH SPEED (3900RPM)	1	619085	2023474
12		1	614148	0201215
13		1	614215	2001127
14	HYDRAULIC DRIVE	1	619080	2024241 EE-TECH
14	MECHANICAL DRIVE	1	619168	2012273
15		1	619062	2004345
16		1	614150	1401234
18	-550651	1	615187	1902351
18	551912	1	615189	2619389
18	-551911	1	619070	2005364
20		1	619174	0112166
20		1	619183	2012167
21		1	619169	2013164
22	-550320 / OPTIONAL EQUIPMENT	1	613124	1472236
22	550321 / OPTIONAL EQUIPMENT	1	613126	0200105
23	551946 / GRAIN TANK	1	615139	2002279
24	P5010	1	615168	1902204

SR 2065 TS

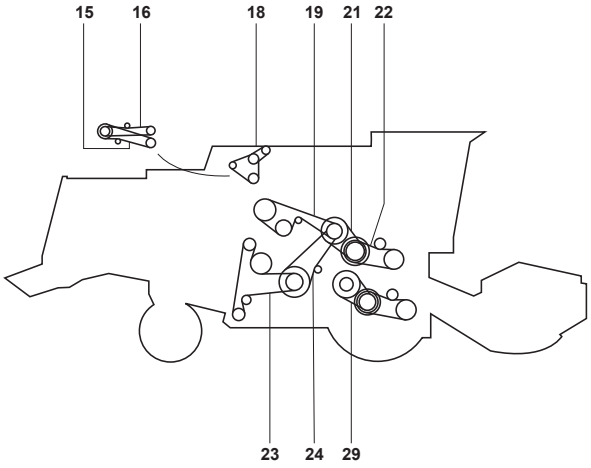

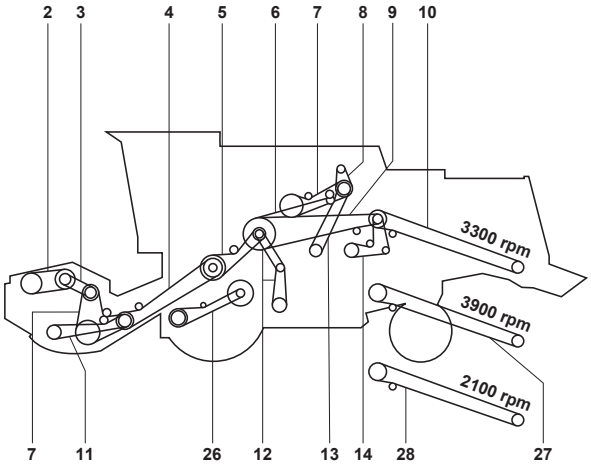

			OE	
2	PICK-UP REEL FRONT	1	614225	0101151
3	PICK-UP REEL REAR	1	615109	0202139
4	TABLE DRIVE	1	615184	2002298
5	TABLE ENGAGE	1	615182	2002253
6	THRESHING MECHANISM - ENGAGE	1	619090	2024368
7	GRAIN TANK UNLOAD DRIVE	1	615135	0502215
7	FEEDER AUGER 450	1	615135	0502215
8	WORKING HYDRAULIC PUMP	1	613122	1472227
9	STRAW CHOPPER FRONT	1	615147	1902376
10	STRAW CHOPPER REAR	1	615151	0402437
11	WB KNIFE DRIVE	1	615168	1902204
12	CLEANING FAN VARIATOR	2	614215	2001127
13	TRACTION HYDRAULIC PUMP	1	619080	2024241 EE-TECH
14	RETURN AUGER BEVEL GEAR	1	614242	1601185
15	ENGINE FAN DRIVE INNER	1	614222	2001143
15	ENGINE FAN DRIVE INNER	1	614224	0301147
15	ENGINE FAN DRIVE INNER	1	614226	0101151
16	ENGINE FAN DRIVE OUTER	1	614212	0201124
18	6-CYLINDER AIR CONDITION	1	684120900	0372203
19	GRAIN ELEVATOR BEVEL GEAR	1	615139	2002279
21	THRESHING CYLINDER	1	619192	0312169
22		1	619077	2023197
23	STRAW WALKER DRIVE	1	619062	2004345
24	SHAKER SHOE DRIVE	1	614150	1401234
26	TABLE ENGAGE	1	619041	2010306
27	STRAW CHOPPER REAR	1	619085	2023474
28	STRAW CHOPPER REAR	1	615190	0302419
29	THRESHING CYLINDER	1	619191	2013164

SAMPO ROSENLEW

SR 2065 XLS

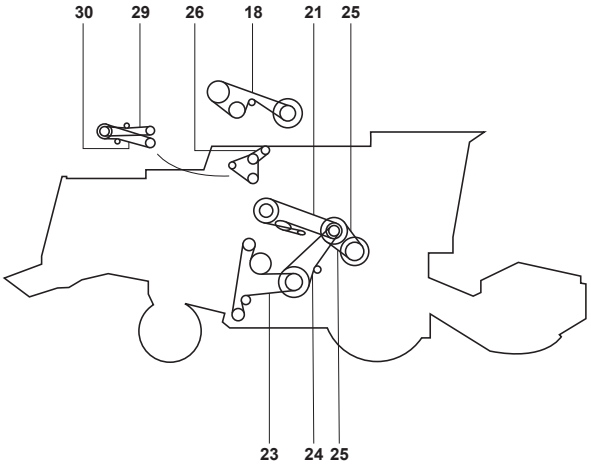

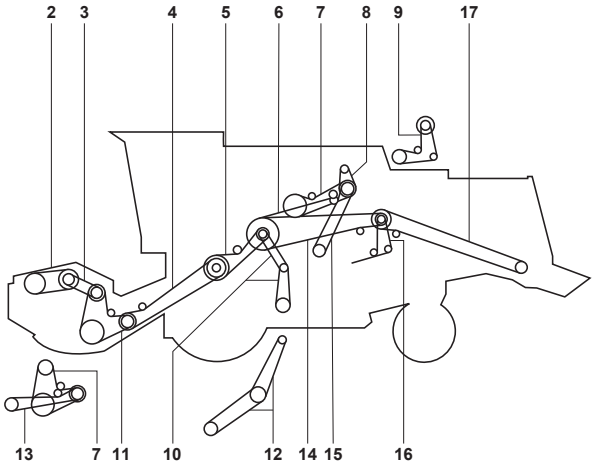

			OE	
2	PICK-UP REEL FRONT	1	614225	0101151
3	PICK-UP REEL REAR	1	615109	0202139
4	TABLE DRIVE	1	615184	2002298
5	TABLE ENGAGE	1	615124	0302197
6	THRESHING MECHANISM - ENGAGE	1	619090	2024368
7	FEEDER AUGER 450	1	615135	0502215
7	GRAIN TANK UNLOAD DRIVE	1	615135	0502215
8	WORKING HYDRAULIC PUMP	1	613122	1472227
9	RETURN AUGER BEVEL GEAR	1	614242	1601185
10	CLEANING FAN VARIATOR	2	614215	2001127
11	FEEDER AUGER 385	1	615128	0202209
12	TRACTION VARIATOR	2	619168	2012273
13	WB KNIFE DRIVE	1	615168	1902204
14	STRAW CHOPPER FRONT	1	615147	1902376
15	TRACTION HYDRAULIC PUMP	1	619080	2024241 EE-TECH
16	RETURN AUGER DIRECT DRIVE	1	614148	0201215
17	STRAW CHOPPER REAR	1	615155	1602396
18	GRAIN ELEVATOR BEVEL GEAR	1	615139	2002279
21	GRAIN ELEVATOR DIRECT DRIVE	1	615189	2619389
23	STRAW WALKER DRIVE	1	619062	2004345
24	SHAKER SHOE DRIVE	1	614150	1401234
25	THRESH CYLINDER (... - 555241)	1	619183	2012167
25	THRESH CYLINDER (555422)	1	619192	0312169
26	AIR CONDITION	1	613113	2017103
29	EGINE FAN DRIVE OUTER	1	614212	0201124
30	ENGINE FAN DRIVE INNER	1	614222	2001143
30	ENGINE FAN DRIVE INNER	1	614224	0301147

SR 2065 XL (... - 555421)

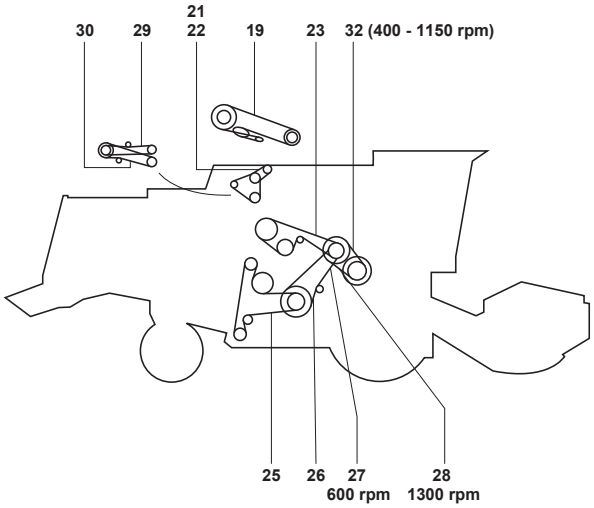

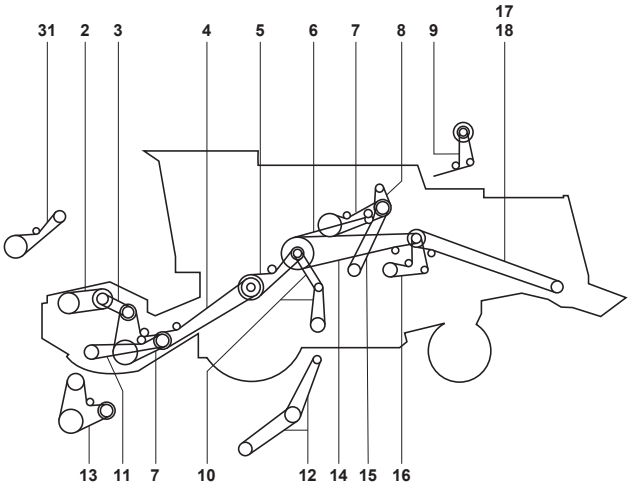

			OE	
2	PICK-UP REEL FRONT	1	614225	0101151
3	PICK-UP REEL REAR	1	615109	0202139
4	TABLE DRIVE	1	615184	2002298
5	TABLE ENGAGE	1	615124	0302197
6	THRESHING MECHANISM - ENGAGE	1	619090	2024368
7	FEEDER AUGER 450	1	615135	0502215
7	GRAIN TANK UNLOAD DRIVE	1	615135	0502215
8	WORKING HYDRAULIC PUMP	1	613122	1472227
9	RETURN AUGER DIRECT DRIVE	1	614148	0201215
10	CLEANING FAN VARIATOR	2	614215	2001127
11	WB KNIFE DRIVE	1	615168	1902204
12	TRACTION VARIATOR	2	619168	2012273
13	FEEDER AUGER 385	1	615128	0202209
14	STRAW CHOPPER FRONT	1	615147	1902376
15	TRACTION HYDRAULIC PUMP	1	619080	2024241 EE-TECH
16	RETURN AUGER BEVEL GEAR	1	614242	1601185
17	STRAW CHOPPER STANDARD SPEED	1	615151	0402437
18	STRAW CHOPPER HIGH SPEED	1	619085	2023474
19	GRAIN ELEVATOR DIRECT DRIVE	1	615189	2619389
21	4-CYLINDER AIR CONDITION	1	613113	2017103
22	6-CYLINDER AIR CONDITION	1	684120900	0372203
23	GRAIN ELEVATOR BEVEL GEAR	1	615139	2002279
25	STRAW WALKER DRIVE	1	619062	2004345
26	SHAKER SHOE DRIVE	1	614150	1401234
27	THRESHING CYLINDER	1	619183	2012167
28	THRESHING CYLINDER	1	619174	0112166
29	ENGINE FAN DRIVE OUTER	1	614212	0201124
30	ENGINE FAN DRIVE INNER	1	614222	2001143
31	TABLE ENGAGE	1	619044	2010251
32	THRESHING CYLINDER	1	619169	2013164

SAMPO ROSENLEW

SR 2065 XL (555422 - ...)

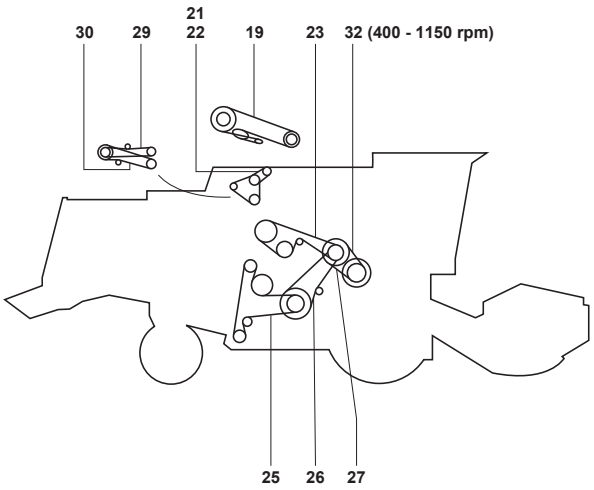

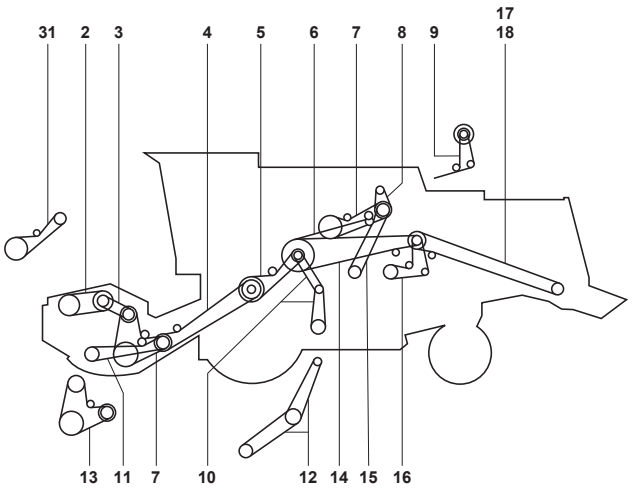

			OE	
2	PICK-UP REEL FRONT	1	614225	0101151
3	PICK-UP REEL REAR	1	615109	0202139
4	TABLE DRIVE	1	615184	2002298
5	TABLE ENGAGE	1	615124	0302197
6	THRESHING MECHANISM - ENGAGE	1	619090	2024368
7	FEEDER AUGER 450	1	615135	0502215
7	GRAIN TANK UNLOAD DRIVE	1	615135	0502215
8	WORKING HYDRAULIC PUMP	1	613122	1472227
9	RETURN AUGER DIRECT DRIVE	1	614148	0201215
10	CLEANING FAN VARIATOR	1	614215	2001127
11	WB KNIFE DRIVE	1	615168	1902204
12	TRACTION VARIATOR	1	619168	2012273
13	FEEDER AUGER 385	1	615128	0202209
14	STRAW CHOPPER FRONT	1	615147	1902376
15	TRACTION HYDRAULIC PUMP	1	619080	2024241 EE-TECH
16	RETURN AUGER BEVEL GEAR	1	614242	1601185
17	STRAW CHOPPER STANDARD SPEED	1	615151	0402437
18	STRAW CHOPPER HIGH SPEED	1	619085	2023474
19	GRAIN ELEVATOR DIRECT DRIVE	1	615189	2619389
21	4-CYLINDER AIR CONDITION	1	613113	2017103
22	6-CYLINDER AIR CONDITION	1	613104	0172201
23	GRAIN ELEVATOR BEVEL GEAR	1	615139	2002279
25	STRAW WALKER DRIVE	1	619062	2004345
26	SHAKER SHOE DRIVE	1	614150	1401234
27	THRESHING CYLINDER	1	619192	0312169
29	ENGINE FAN DRIVE OUTER	1	614212	0201124
30	ENGINE FAN DRIVE INNER	1	614222	2001143
30	ENGINE FAN DRIVE INNER	1	614224	0301147
30	ENGINE FAN DRIVE INNER	1	614226	0101151
31	TABLE ENGAGE	1	619044	2010251
32	THRESHING CYLINDER	1	619191	2013164

SR 2085 TS

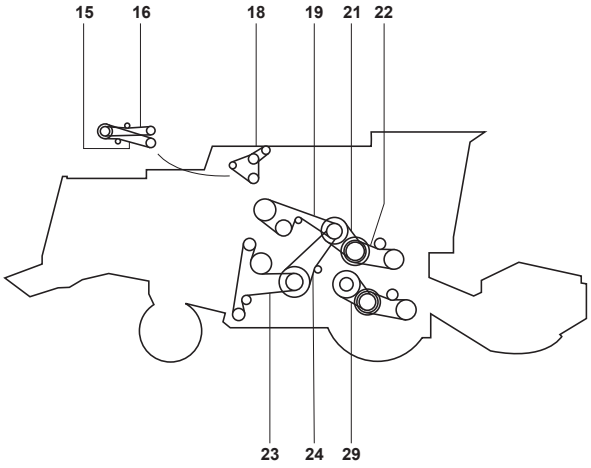

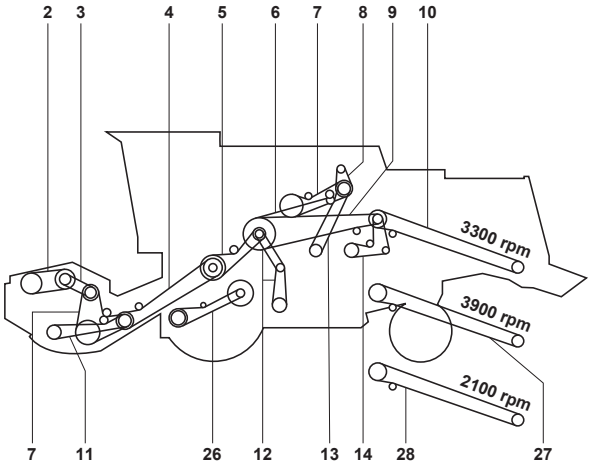

			OE	
2	PICK-UP REEL FRONT	1	614225	0101151
3	PICK-UP REEL REAR	1	615109	0202139
4	TABLE DRIVE	1	615184	2002298
5	TABLE ENGAGE	1	615182	2002253
6	THRESHING MECHANISM - ENGAGE	1	619090	2024368
7	GRAIN TANK UNLOAD DRIVE	1	615135	0502215
7	FEEDER AUGER 450	1	615135	0502215
8	WORKING HYDRAULIC PUMP	1	613122	1472227
9	STRAW CHOPPER FRONT	1	615147	1902376
10	STRAW CHOPPER REAR	1	615151	0402437
11	WB KNIFE DRIVE	1	615168	1902204
12	CLEANING FAN VARIATOR	2	614215	2001127
13	TRACTION HYDRAULIC PUMP	1	619080	2024241 EE-TECH
14	RETURN AUGER BEVEL GEAR	1	614242	1601185
15	ENGINE FAN DRIVE INNER	1	614222	2001143
15	ENGINE FAN DRIVE INNER	1	614224	0301147
15	ENGINE FAN DRIVE INNER	1	614226	0101151
16	ENGINE FAN DRIVE OUTER	1	614212	0201124
18	6-CYLINDER AIR CONDITION	1	684120900	0372203
19	GRAIN ELEVATOR BEVEL GEAR	1	615139	2002279
21	THRESHING CYLINDER	1	619192	0312169
22		1	619077	2023197
23	STRAW WALKER DRIVE	1	619062	2004345
24	SHAKER SHOE DRIVE	1	614150	1401234
26	TABLE ENGAGE	1	619041	2010306
27	STRAW CHOPPER REAR	1	619085	2023474
28	STRAW CHOPPER REAR	1	615190	0302419
29	THRESHING CYLINDER	1	619191	2013164

SAMPO ROSENLEW

SR 2085 XLS

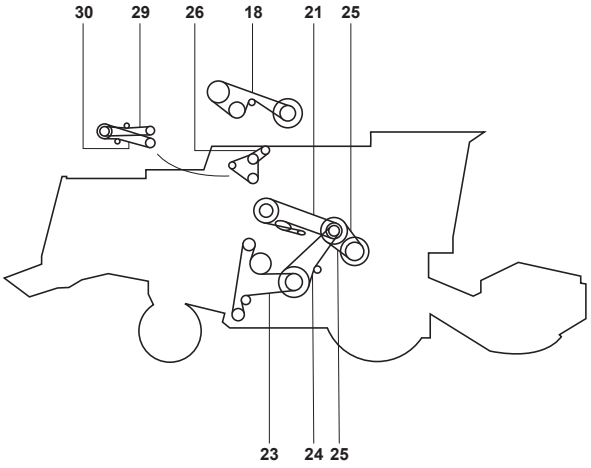

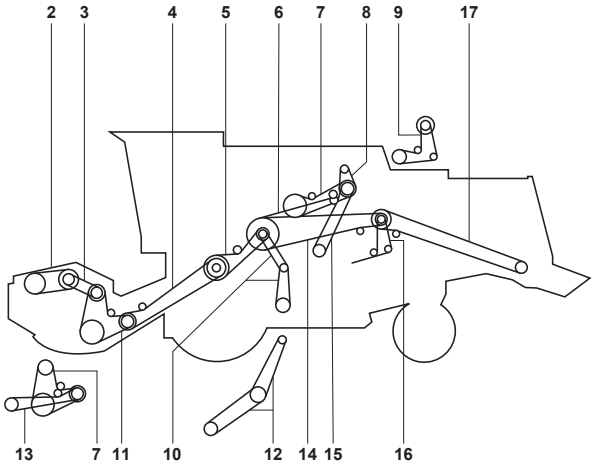

			OE	
2	PICK-UP REEL FRONT	1	614225	0101151
3	PICK-UP REEL REAR	1	615109	0202139
4	TABLE DRIVE	1	615184	2002298
5	TABLE ENGAGE	1	615124	0302197
6	THRESHING MECHANISM - ENGAGE	1	619090	2024368
7	FEEDER AUGER 450	1	615135	0502215
7	GRAIN TANK UNLOAD DRIVE	1	615135	0502215
8	WORKING HYDRAULIC PUMP	1	613122	1472227
9	RETURN AUGER BEVEL GEAR	1	614242	1601185
10	CLEANING FAN VARIATOR	2	614215	2001127
11	FEEDER AUGER 385	1	615128	0202209
12	TRACTION VARIATOR	2	619168	2012273
13	WB KNIFE DRIVE	1	615168	1902204
14	STRAW CHOPPER FRONT	1	615147	1902376
15	TRACTION HYDRAULIC PUMP	1	619080	2024241 EE-TECH
16	RETURN AUGER DIRECT DRIVE	1	614148	0201215
17	STRAW CHOPPER REAR	1	615155	1602396
18	GRAIN ELEVATOR BEVEL GEAR	1	615139	2002279
21	GRAIN ELEVATOR DIRECT DRIVE	1	615189	2619389
23	STRAW WALKER DRIVE	1	619062	2004345
24	SHAKER SHOE DRIVE	1	614150	1401234
25	THRESH CYLINDER (... - 555241)	1	619183	2012167
25	THRESH CYLINDER (555422)	1	619192	0312169
26	AIR CONDITION	1	613113	2017103
29	EGINE FAN DRIVE OUTER	1	614212	0201124
30	ENGINE FAN DRIVE INNER	1	614222	2001143
30	ENGINE FAN DRIVE INNER	1	614224	0301147

SR 2085 XL (... - 555421)

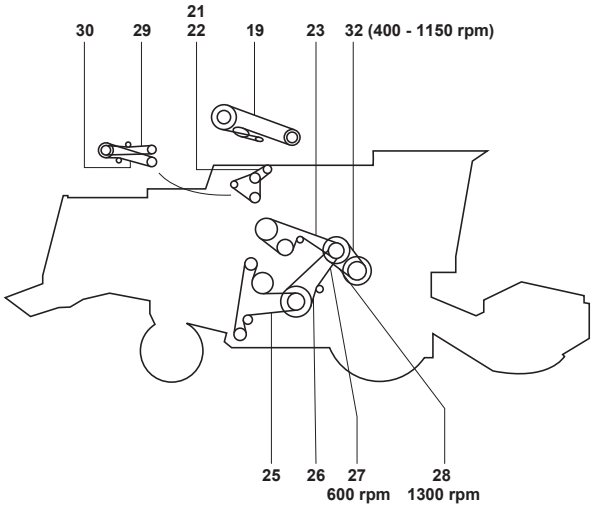

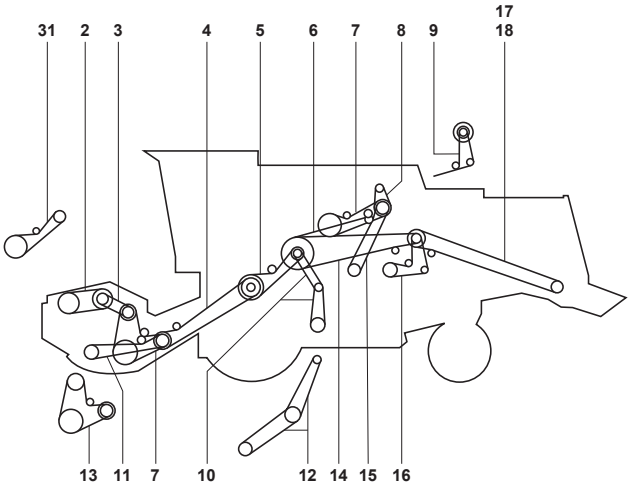

			OE	
2	PICK-UP REEL FRONT	1	614225	0101151
3	PICK-UP REEL REAR	1	615109	0202139
4	TABLE DRIVE	1	615184	2002298
5	TABLE ENGAGE	1	615124	0302197
6	THRESHING MECHANISM - ENGAGE	1	619090	2024368
7	FEEDER AUGER 450	1	615135	0502215
7	GRAIN TANK UNLOAD DRIVE	1	615135	0502215
8	WORKING HYDRAULIC PUMP	1	613122	1472227
9	RETURN AUGER DIRECT DRIVE	1	614148	0201215
10	CLEANING FAN VARIATOR	2	614215	2001127
11	WB KNIFE DRIVE	1	615168	1902204
12	TRACTION VARIATOR	2	619168	2012273
13	FEEDER AUGER 385	1	615128	0202209
14	STRAW CHOPPER FRONT	1	615147	1902376
15	TRACTION HYDRAULIC PUMP	1	619080	2024241 EE-TECH
16	RETURN AUGER BEVEL GEAR	1	614242	1601185
17	STRAW CHOPPER STANDARD SPEED	1	615151	0402437
18	STRAW CHOPPER HIGH SPEED	1	619085	2023474
19	GRAIN ELEVATOR DIRECT DRIVE	1	615189	2619389
21	4-CYLINDER AIR CONDITION	1	613113	2017103
22	6-CYLINDER AIR CONDITION	1	684120900	0372203
23	GRAIN ELEVATOR BEVEL GEAR	1	615139	2002279
25	STRAW WALKER DRIVE	1	619062	2004345
26	SHAKER SHOE DRIVE	1	614150	1401234
27	THRESHING CYLINDER	1	619183	2012167
28	THRESHING CYLINDER	1	619174	0112166
29	ENGINE FAN DRIVE OUTER	1	614212	0201124
30	ENGINE FAN DRIVE INNER	1	614222	2001143
31	TABLE ENGAGE	1	619044	2010251
32	THRESHING CYLINDER	1	619169	2013164

SAMPO ROSENLEW

SR 2085 XL (555422 - ...)

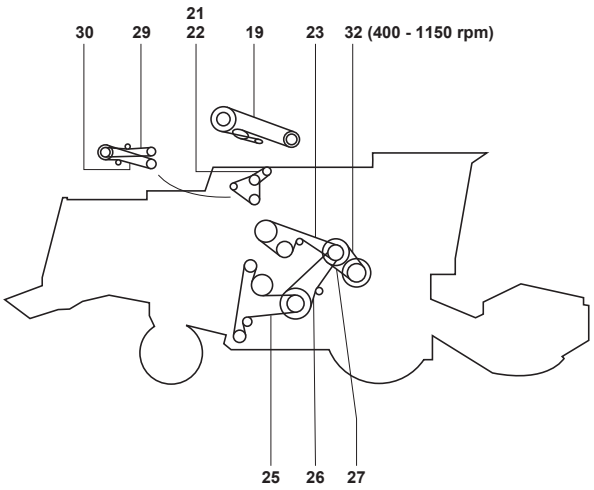

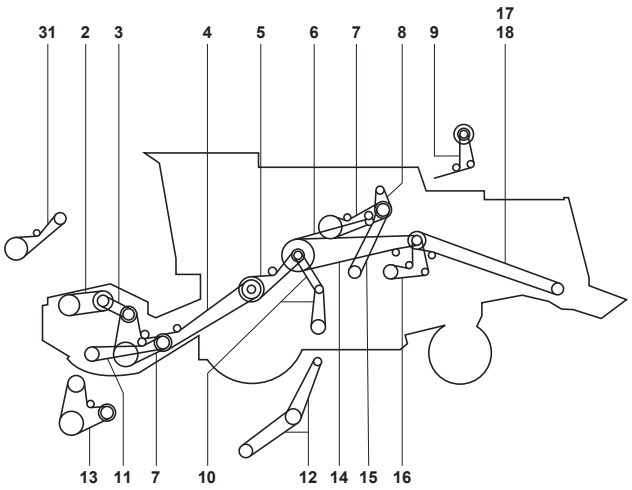

			OE	
2	PICK-UP REEL FRONT	1	614225	0101151
3	PICK-UP REEL REAR	1	615109	0202139
4	TABLE DRIVE	1	615184	2002298
5	TABLE ENGAGE	1	615124	0302197
6	THRESHING MECHANISM - ENGAGE	1	619090	2024368
7	FEEDER AUGER 450	1	615135	0502215
7	GRAIN TANK UNLOAD DRIVE	1	615135	0502215
8	WORKING HYDRAULIC PUMP	1	613122	1472227
9	RETURN AUGER DIRECT DRIVE	1	614148	0201215
10	CLEANING FAN VARIATOR	1	614215	2001127
11	WB KNIFE DRIVE	1	615168	1902204
12	TRACTION VARIATOR	1	619168	2012273
13	FEEDER AUGER 385	1	615128	0202209
14	STRAW CHOPPER FRONT	1	615147	1902376
15	TRACTION HYDRAULIC PUMP	1	619080	2024241 EE-TECH
16	RETURN AUGER BEVEL GEAR	1	614242	1601185
17	STRAW CHOPPER STANDARD SPEED	1	615151	0402437
18	STRAW CHOPPER HIGH SPEED	1	619085	2023474
19	GRAIN ELEVATOR DIRECT DRIVE	1	615189	2619389
21	4-CYLINDER AIR CONDITION	1	613113	2017103
22	6-CYLINDER AIR CONDITION	1	613104	0172201
23	GRAIN ELEVATOR BEVEL GEAR	1	615139	2002279
25	STRAW WALKER DRIVE	1	619062	2004345
26	SHAKER SHOE DRIVE	1	614150	1401234
27	THRESHING CYLINDER	1	619192	0312169
29	ENGINE FAN DRIVE OUTER	1	614212	0201124
30	ENGINE FAN DRIVE INNER	1	614222	2001143
30	ENGINE FAN DRIVE INNER	1	614224	0301147
30	ENGINE FAN DRIVE INNER	1	614226	0101151
31	TABLE ENGAGE	1	619044	2010251
32	THRESHING CYLINDER	1	619191	2013164

SR 2095 TS

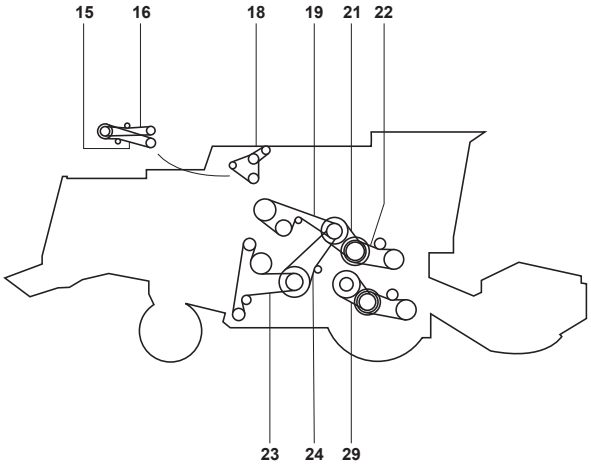

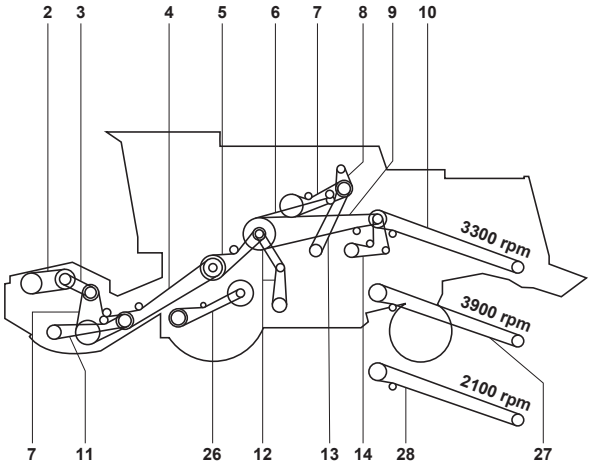

			OE	
2	PICK-UP REEL FRONT	1	614225	0101151
3	PICK-UP REEL REAR	1	615109	0202139
4	TABLE DRIVE	1	615184	2002298
5	TABLE ENGAGE	1	615182	2002253
6	THRESHING MECHANISM - ENGAGE	1	619090	2024368
7	GRAIN TANK UNLOAD DRIVE	1	615135	0502215
7	FEEDER AUGER 450	1	615135	0502215
8	WORKING HYDRAULIC PUMP	1	613122	1472227
9	STRAW CHOPPER FRONT	1	615147	1902376
10	STRAW CHOPPER REAR	1	615151	0402437
11	WB KNIFE DRIVE	1	615168	1902204
12	CLEANING FAN VARIATOR	2	614215	2001127
13	TRACTION HYDRAULIC PUMP	1	619080	2024241 EE-TECH
14	RETURN AUGER BEVEL GEAR	1	614242	1601185
15	ENGINE FAN DRIVE INNER	1	614222	2001143
15	ENGINE FAN DRIVE INNER	1	614224	0301147
15	ENGINE FAN DRIVE INNER	1	614226	0101151
16	ENGINE FAN DRIVE OUTER	1	614212	0201124
18	6-CYLINDER AIR CONDITION	1	684120900	0372203
19	GRAIN ELEVATOR BEVEL GEAR	1	615139	2002279
21	THRESHING CYLINDER	1	619192	0312169
22		1	619077	2023197
23	STRAW WALKER DRIVE	1	619062	2004345
24	SHAKER SHOE DRIVE	1	614150	1401234
26	TABLE ENGAGE	1	619041	2010306
27	STRAW CHOPPER REAR	1	619085	2023474
28	STRAW CHOPPER REAR	1	615190	0302419
29	THRESHING CYLINDER	1	619191	2013164

SAMPO ROSENLEW

SR 2095 XLS

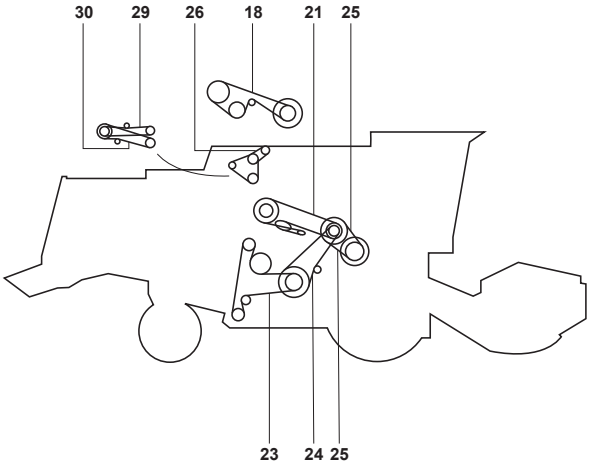

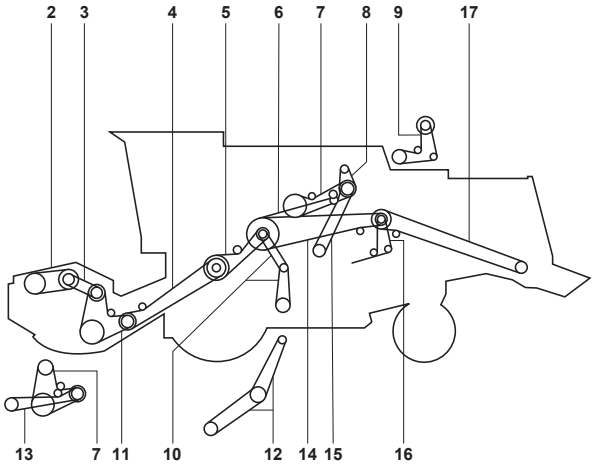

			OE	
2	PICK-UP REEL FRONT	1	614225	0101151
3	PICK-UP REEL REAR	1	615109	0202139
4	TABLE DRIVE	1	615184	2002298
5	TABLE ENGAGE	1	615124	0302197
6	THRESHING MECHANISM - ENGAGE	1	619090	2024368
7	FEEDER AUGER 450	1	615135	0502215
7	GRAIN TANK UNLOAD DRIVE	1	615135	0502215
8	WORKING HYDRAULIC PUMP	1	613122	1472227
9	RETURN AUGER BEVEL GEAR	1	614242	1601185
10	CLEANING FAN VARIATOR	2	614215	2001127
11	FEEDER AUGER 385	1	615128	0202209
12	TRACTION VARIATOR	2	619168	2012273
13	WB KNIFE DRIVE	1	615168	1902204
14	STRAW CHOPPER FRONT	1	615147	1902376
15	TRACTION HYDRAULIC PUMP	1	619080	2024241 EE-TECH
16	RETURN AUGER DIRECT DRIVE	1	614148	0201215
17	STRAW CHOPPER REAR	1	615155	1602396
18	GRAIN ELEVATOR BEVEL GEAR	1	615139	2002279
21	GRAIN ELEVATOR DIRECT DRIVE	1	615189	2619389
23	STRAW WALKER DRIVE	1	619062	2004345
24	SHAKER SHOE DRIVE	1	614150	1401234
25	THRESH CYLINDER (... - 555241)	1	619183	2012167
25	THRESH CYLINDER (555422)	1	619192	0312169
26	AIR CONDITION	1	613113	2017103
29	EGINE FAN DRIVE OUTER	1	614212	0201124
30	ENGINE FAN DRIVE INNER	1	614222	2001143
30	ENGINE FAN DRIVE INNER	1	614224	0301147

SR 2095 XL (... - 555421)

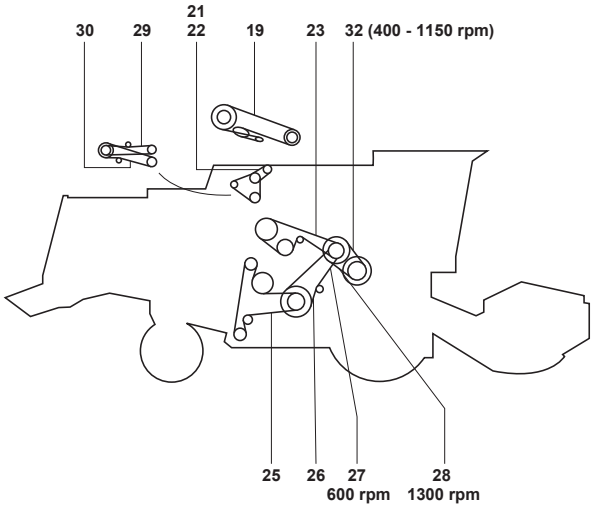

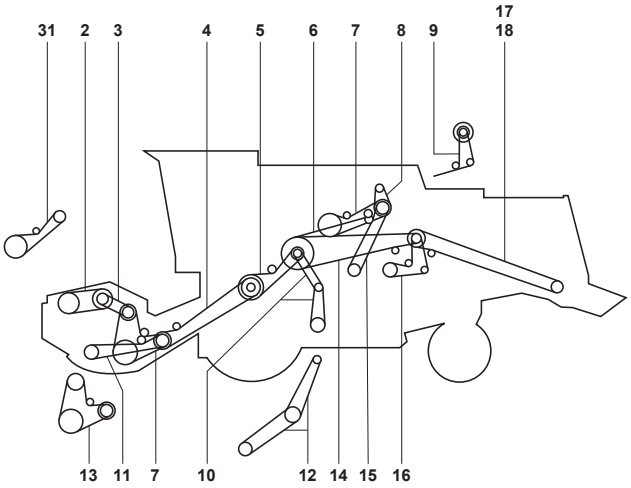

			OE	
2	PICK-UP REEL FRONT	1	614225	0101151
3	PICK-UP REEL REAR	1	615109	0202139
4	TABLE DRIVE	1	615184	2002298
5	TABLE ENGAGE	1	615124	0302197
6	THRESHING MECHANISM ENGAGE	1	619090	2024368
7	FEEDER AUGER 450	1	615135	0502215
7	GRAIN TANK UNLOADING ENG	1	615135	0502215
8	WORKING HYDRAULIC PUMP	1	613122	1472227
9	RETURN AUGER DIRECT DRIVE	1	614148	0201215
10	CLEANING FAN VARIATOR	2	614215	2001127
11	WB KNIFE DRIVE	1	615168	1902204
12	TRACTION VARIATOR	2	619168	2012273
13	FEEDER AUGER 385	1	615128	0202209
14	STRAW CHOPPER FRONT	1	615147	1902376
15	TRACTION HYDRAULIC PUMP	1	619080	2024241 EE-TECH
16	RETURN AUGER BEVEL GEAR	1	614242	1601185
17	STRAW CHOPPER STANDARD	1	615151	0402437
18	STRAW CHOPPER HIGH SPEED	1	619085	2023474
19	GRAIN ELEVATOR DIRECT DRIVE	1	615189	2619389
21	4-CYLINDER AIR CONDITION	1	613113	2017103
22	6-CYLINDER AIR CONDITION	1	684120900	0372203
23	GRAIN ELEVATOR BEVEL GEAR	1	615139	2002279
25	STRAW WALKER DRIVE	1	619062	2004345
26	SHAKER SHOE DRIVE	1	614150	1401234
27	THRESHING CYLINDER	1	619183	2012167
28	THRESHING CYLINDER	1	619174	0112166
29	ENGINE FAN DRIVE OUTER	1	614212	0201124
30	ENGINE FAN DRIVE INNER	1	614222	2001143
31	TABLE ENGAGE	1	619044	2010251
32	THRESHING CYLINDER	1	619169	2013164

SAMPO ROSENLEW

SR 2095 XL (555422 - ...)

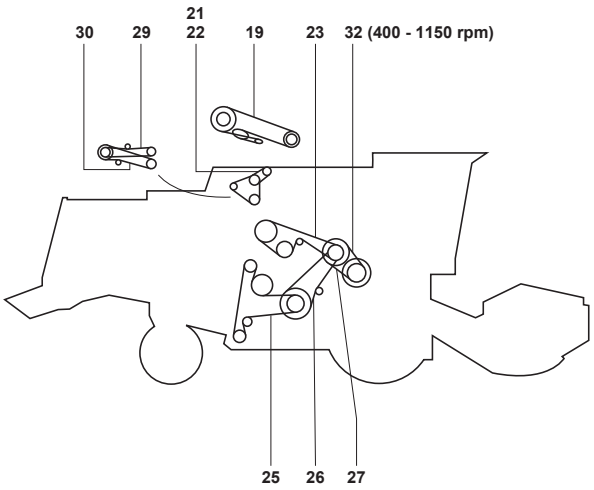

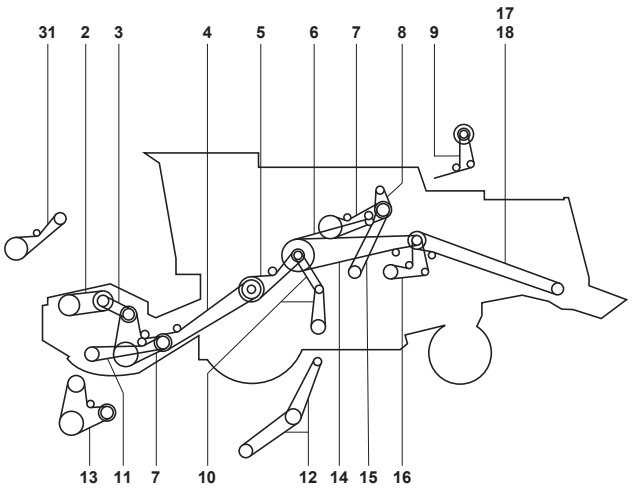

			OE	
2	PICK-UP REEL FRONT	1	614225	0101151
3	PICK-UP REEL REAR	1	615109	0202139
4	TABLE DRIVE	1	615184	2002298
5	TABLE ENGAGE	1	615124	0302197
6	THRESHING MECHANISM ENGAGE	1	619090	2024368
7	FEEDER AUGER 450	1	615135	0502215
7	GRAIN TANK UNLOADING ENG	1	615135	0502215
8	WORKING HYDRAULIC PUMP	1	613122	1472227
9	RETURN AUGER DIRECT DRIVE	1	614148	0201215
10	CLEANING FAN VARIATOR	1	614215	2001127
11	WB KNIFE DRIVE	1	615168	1902204
12	TRACTION VARIATOR	1	619168	2012273
13	FEEDER AUGER 385	1	615128	0202209
14	STRAW CHOPPER FRONT	1	615147	1902376
15	TRACTION HYDRAULIC PUMP	1	619080	2024241 EE-TECH
16	RETURN AUGER BEVEL GEAR	1	614242	1601185
17	STRAW CHOPPER STANDARD SPEED	1	615151	0402437
18	STRAW CHOPPER HIGH SPEED	1	619085	2023474
19	GRAIN ELEVATOR DIRECT DRIVE	1	615189	2619389
21	4-CYLINDER AIR CONDITION	1	613113	2017103
22	6-CYLINDER AIR CONDITION	1	613104	0172201
23	GRAIN ELEVATOR BEVEL GEAR	1	615139	2002279
25	STRAW WALKER DRIVE	1	619062	2004345
26	SHAKER SHOE DRIVE	1	614150	1401234
27	THRESHING CYLINDER	1	619192	0312169
29	ENGINE FAN DRIVE OUTER	1	614212	0201124
30	ENGINE FAN DRIVE INNER	1	614222	2001143
30	ENGINE FAN DRIVE INNER	1	614224	0301147
30	ENGINE FAN DRIVE INNER	1	614226	0101151
31	TABLE ENGAGE	1	619044	2010251
32	THRESHING CYLINDER	1	619191	2013164

COMBINA 140

			OE	
2	KNIFE DRIVE	1	22X14X2120LP	0102161
3	THRESHING DRUM VARIATOR DRIVE	1	35X12X1340LP	1961209
4	THRESHING DRUM VARIATOR DRIVE	1	2C/HC3185LE	0227286
5	THRESHING DRUM DRIVE (REAR)	1	4B/HB3700LE	0724321 EE-TECH
6	VARI SPEED DRIVE	1	45X20X3070LI	0812260
7	HYDRAULIC PUMP DRIVE	1	17X11X1180LP	0201092
8	CYLINDER DRIVE	1	32X19X4350LP	2103333
11	MAIN FAN	1	22X14X2000LP	0302154
12	UNLOADING DRIVE	1	2B/HB4250LE	2124361
13	SHACKER SHAFT DRIVE	1	22X14X4100LP	0202310
15		1	2B/HB2650LE	1423240
16	DRUM DRIVE VARIABLE SPEED	1	51X20X1983LI	0713182

COMBINA C 110

			OE	
2	KNIFE DRIVE	1	22X14X2120LP	0102161
3	THRESHING DRUM VARIATOR DRIVE	1	35X12X1340LP	1961209
4	THRESHING DRUM VARIATOR DRIVE	1	2C/HC3185LE	0227286
5	THRESHING DRUM DRIVE (REAR)	1	4B/HB3700LE	0724321 EE-TECH
6	VARI SPEED DRIVE	1	45X20X3070LI	0812260
7	HYDRAULIC PUMP DRIVE	1	17X11X1180LP	0201092
8	CYLINDER DRIVE	1	32X19X4350LP	2103333
11	MAIN FAN	1	22X14X1800LP	0102137
12	UNLOADING DRIVE	1	2B/HB3300LE	1524289
13	SHACKER SHAFT DRIVE	1	22X14X4100LP	0202310
14	ENGINE FAN AND WATERPUMP	1	12.5X10X1175LE	0372223
15		1	2B/HB2650LE	1423240
16	DRUM DRIVE VARIABLE SPEED	1	50X20X1983LI	0713182

COMBINA C 12 M

			OE	
1		1	22X14X3300LP	0302248
3	THRESHING DRUM VARIATOR DRIVE	1	35X12X1340LP	1961209
4	THRESHING DRUM VARIATOR DRIVE	1	32X19X3115LP	0203240
5	THRESHING DRUM DRIVE (REAR)	1	4B/HB3250LE	2124287
6	VARI SPEED DRIVE	1	45X20X2750LI	1912236
7	HYDRAULIC PUMP DRIVE	1	17X11X1180LP	0201092
8	CYLINDER DRIVE	1	32X19X3700LP	1903286
9		1	22X14X3450LP	0202261
11	MAIN FAN	1	17X11X1554LP	1601120
12	UNLOADING DRIVE	1	22X14X3100LP	0202235
13	SHACKER SHAFT DRIVE	1	22X14X3600LP	0202275
14	ENGINE FAN AND WATERPUMP	1	12.5X10X1175LE	0372223
15		1	17X13X1443LP	2137177
16	DRUM DRIVE VARIABLE SPEED	1	40X20X1750LI	1411159

COMBINA C 14 M

			OE	
1	THRESHING DRUM VARIATOR DRIVE	1	22X14X3000LP	0702225
2	KNIFE DRIVE	1	22X14X2120LP	0102161
3	THRESHING DRUM VARIATOR DRIVE	1	35X12X1340LP	1961209
4	THRESHING DRUM VARIATOR DRIVE	1	32X19X3115LP	0203240
5	THRESHING DRUM DRIVE (REAR)	1	4B/HB3950LE	0124338
6	VARI SPEED DRIVE	1	45X20X2950LI	1512251
7	HYDRAULIC PUMP DRIVE	1	17X11X1180LP	0201092
8	CYLINDER DRIVE	1	32X19X3700LP	1903286
11	MAIN FAN	1	22X18X2800LP	1519244
12	UNLOADING DRIVE	1	22X18X3000LP	2119259
13	SHACKER SHAFT DRIVE	1	22X14X3600LP	0202275
15		1	17X13X1443LP	2137177
16	DRUM DRIVE VARIABLE SPEED	1	45X20X1800LI	☎

COMBINA C 14 U

			OE	
1	THRESHING DRUM VARIATOR DRIVE	1	22X14X3300LP	0302248
3	THRESHING DRUM VARIATOR DRIVE	1	35X12X1340LP	1961209
4	THRESHING DRUM VARIATOR DRIVE	1	32X19X3115LP	0203240
5	THRESHING DRUM DRIVE (REAR)	1	4B/HB3250LE	2124287
6	VARI SPEED SYSTEM	1	45X20X2750LI	1912236
7	HYDRAULIC PUMP DRIVE	1	17X13X1250LP	2137163
8	CYLINDER DRIVE	1	32X19X3700LP	1903286
9		1	22X18X2120LP	1519193
10		1	17X13X1250LP	2137163
11	MAIN FAN	1	22X14X1630LP	0202126
12	UNLOADING DRIVE	1	22X14X3100LP	0202235
13	SHACKER SHAFT DRIVE	1	22X14X3600LP	0202275
15		1	17X13X1443LP	2137177
17		1	13X8X1400LP	1900106
18		1	22X18X2000LP	2119184
19		1	22X14X3150LP	1602240

COMBINA C 80

			OE	
1	THRESHING DRUM VARIATOR DRIVE	1	22X14X3300LP	0302248
3	THRESHING DRUM VARIATOR DRIVE	1	35X12X1340LP	1961209
4	THRESHING DRUM VARIATOR DRIVE	1	32X19X3115LP	0203240
5	THRESHING DRUM DRIVE (REAR)	1	4B/HB3250LE	2124287
6	VARI SPEED DRIVE	1	45X20X2750LI	1912236
7	HYDRAULIC PUMP DRIVE	1	17X11X1180LP	0201092
8	CYLINDER DRIVE	1	32X19X3700LP	1903286
9		1	22X14X3450LP	0202261
11	MAIN FAN	1	17X14X1800LP	2101138
12	UNLOADING DRIVE	1	22X14X3100LP	0202235
13	SHACKER SHAFT DRIVE	1	22X14X3600LP	0202275
15		1	22X14X1460LP	0302313
16	DRUM DRIVE VARIABLE SPEED	1	55X20X1850LI	2013171

COMBINA CP 12

			OE	
1	THRESHING DRUM VARIATOR DRIVE	1	22X14X3300LP	0302248
3	THRESHING DRUM VARIATOR DRIVE	1	35X12X1340LP	1961209
4	THRESHING DRUM VARIATOR DRIVE	1	32X19X3115LP	0203240
5	THRESHING DRUM DRIVE (REAR)	1	140X6X3460LE	1981410
6	VARI SPEED DRIVE	1	45X20X2750LI	1912236
7	HYDRAULIC PUMP DRIVE	1	17X11X1180LP	0201092
8	CYLINDER DRIVE	1	32X19X3700LP	1903286
9		1	22X14X3450LP	0202261
11	MAIN FAN	1	17X11X1554LP	1601120
12	UNLOADING DRIVE	1	22X14X3100LP	0202235
13	SHACKER SHAFT DRIVE	1	22X14X3600LP	0202275
15		1	22X14X1460LP	0302313
16	DRUM DRIVE VARIABLE SPEED	1	40X20X1750LI	1411159

BC 4500

			OE	
1		1	26733588	0301217
2		1	6219167M1	0202285
3		1	26732883	1524289
4		1	1141500	Chain
5		1	26733248	1401241
6		1	26732815	0324377
7		1	26732833	1402363
8		1	26733312	0714187
9		1	26733578	0101187
10		1	26733247	2001129
11		1	26732797	1537326
12		1	6273869M1	☎
13		1	6154998	2623506
14		1	6210914M2	☎
15		1	6159053	0227290
16		1	6213305	Chain
18		1	26732820	1527171
19		1	6213198	Chain

TRACTORS

DRIVEN BY POSSIBILITY™

ALPHABETICAL LISTING BY TRACTOR

AGCO 804
ALLIS-CHALMERS 804
ANTONIO CARRARO 809
BELARUS 809
BIG BUD 810
CASE 810
CASE INTL. HARVESTER 814
CATERPILLAR 820
CBT 822
CHALLENGER 822
COCKSHUTT 822
DAVID BROWN 823
DEUTZ-ALLIS 823
DEUTZ-FAHR 824
FERGUSON 824
FERRARI 824
FIAT 825
FORD 825
FORD-NEW HOLLAND 833
FORDSON 836
HESSTON 836
HESSTON-FIAT 837
IMT 837
INT. HARVESTER 837
JCB 850
JOHN DEERE 850
KIOTI 864
LANDINI 864
LEYLAND 864
LONG 864
MAHINDRA 865
MASSEY FERGUSON 865
MASSEY HARRIS 871
MITSUBISHI-SATOH 871
MONTANA TRACTORS 872
MUIR-HILL 872
MULLER 872
NEW HOLLAND 872
OLIVER 875
SAME 878
SHEPPARD 878
STEIGER 879
VALTRA-VALMET 880
VERSATILE 880
WHITE 881
YANMAR 884
ZETOR 884

AGCO						
RT95	CUMMINS 6-CYL. 5.9 L	(02-04)	SERPENTINE	-	3911575	0285271
ALLIS-CHALMERS						
160	PERKINS 3-CYL. 153	(72-74)	POWER STEERING	-	2073746	0172192
		(72-74)	FAN TO GENERATOR	-	2074320	0372231
170	PERKINS 4-CYL. 236	(67-73)	FAN TO ALTERNATOR	-	227470	1472227
	WEST ALLIS 4-CYL. 226	(67-73)	FAN TO ALTERNATOR	-	248316	0172225
175	PERKINS 4-CYL. 236	(70-80)	FAN TO ALTERNATOR	-	227470	1472227
	WEST ALLIS 4-CYL. 226	(73-76)	FAN TO ALTERNATOR	-	248316	0172225
185	WEST ALLIS 6-CYL. 301	(70-81)	FAN TO ALTERNATOR	-	243021	1472236
H223385	ALLIS-CHALMERS 6-CYL. 301	(72-75)		-	256417	0372272
HXE10556				-	256655	1472236
440	CUMMINS 555C	(72-76)	AIR CONDITIONING	-	-	1423296
			ALTERNATOR	-	178398	1473203
			FAN TO WATER PUMP	-	204481	0372255
650	ALLIS-CHALMERS 2000	(70-75)	ALTERNATOR	-	245120	0372262
			WATER PUMP	-	237048	0372223
652	ALLIS-CHALMERS 2000	(70-75)	ALTERNATOR	-	245120	0372262
			WATER PUMP	-	237048	0372223
653	ALLIS-CHALMERS 2000	(70-75)	ALTERNATOR	-	245120	0372262
			WATER PUMP	-	237048	0372223
655	ALLIS-CHALMERS 2000	(70-75)	ALTERNATOR	-	245120	0372262
			WATER PUMP	-	237048	0372223
5015	TOYOSHA 3-CYL. 61	(81-85)	FAN TO ALTERNATOR	-	2100737	0173210
5020	TOYOSHA 2-CYL. 77	(77-85)	FAN TO ALTERNATOR	-	2097654	1272212
5030	TOYOSHA 2-CYL. 90	(78-85)	FAN TO ALTERNATOR	-	2097654	1272212
5040	UZINA 3-CYL. 143	(76-80)	FAN TO ALTERNATOR	-	2091561	0173223
5045	FIAT 3-CYL. 159	(81-83)	FAN TO ALTERNATOR	I→ SERIAL No. 700,001	2091561	0173223
5050	FIAT 3-CYL. 168	(77-83)	FAN TO ALTERNATOR	I→ SERIAL No. 700,001	2091561	0173223
				→I SERIAL No. 700,000	2091544	0173223
6040	PERKINS 3-CYL. 152	(74)	FAN, ALTERNATOR TO WATER PUMP	-	229211	0372223
	PERKINS 3-CYL. 153	(75)	FAN, ALTERNATOR TO WATER PUMP	-	229211	0372223
6060	ALLIS-CHALMERS 4-CYL. 200	(80-84)	AIR CONDITIONING	I→ SERIAL No. 3770	562203	0172219
				→I SERIAL No. 4373	272411	0172220
		(80-84)	FAN TO ALTERNATOR	-	263408	1472238
6070	ALLIS-CHALMERS 4-CYL. 200	(84-85)	AIR CONDITIONING	-	562203	0172219
		(84-85)	FAN TO ALTERNATOR	-	263408	1472238
6080	ALLIS-CHALMERS 4-CYL. 200	(80-85)	AIR CONDITIONING	→I SERIAL No. 3769	272411	0172220
				I→ SERIAL No. 4374	562203	0172219
		(80-85)	FAN TO ALTERNATOR	-	263408	1472238
6140	TOYOSHA 3-CYL. 142	(82-85)	FAN TO ALTERNATOR	-	-	0172219
7000	ALLIS-CHALMERS 6-CYL. 301	(75-79)	AIR CONDITIONING	→I SERIAL No. 8000	260149	0372280
				I→ SERIAL No. 8001	268485	1472236
		(75-79)	FAN TO ALTERNATOR	-	260328	0372240
7010	ALLIS-CHALMERS 6-CYL. 301	(79-81)	AIR CONDITIONING	-	260149	0372280
		(79-81)	FAN TO ALTERNATOR	-	-	0372244
7020	ALLIS-CHALMERS 6-CYL. 301	(77-81)	AIR CONDITIONING	-	260149	0372280
		(77-81)	FAN TO ALTERNATOR	-	-	0372244
7030	ALLIS-CHALMERS 6-CYL. 426	(73-74)	AIR CONDITIONING	-	268485	1472236
7040	ALLIS-CHALMERS 6-CYL. 426	(75-77)	AIR CONDITIONING	-	268485	1472236
7045	ALLIS-CHALMERS 6-CYL. 426	(78-81)	AIR CONDITIONING	-	268485	1472236
7050	ALLIS-CHALMERS 6-CYL. 426	(73-74)	AIR CONDITIONING	-	268485	1472236

					OE	
7060	ALLIS-CHALMERS 6-CYL. 426	(75-81)	AIR CONDITIONING	-	268485	1472236
7080	ALLIS-CHALMERS 6-CYL. 426	(74-81)	AIR CONDITIONING	→I SERIAL No. 3828	268485	1472236
				I→ SERIAL No. 3829	261802	0372240
		(74-81)	FAN TO ALTERNATOR	-	269183	0301118
7580	ALLIS-CHALMERS 6-CYL. 426	(76-81)	AIR CONDITIONING	→I SERIAL No. 2611	268485	1472236
				I→ SERIAL No. 2612	261802	0372240
		(76-81)	FAN TO ALTERNATOR	-	269183	0301118
8010	ALLIS-CHALMERS 6-CYL. 301	(81-85)	AIR CONDITIONING	-	260149	0372280
		(81-85)	FAN TO ALTERNATOR	-	254350	0372242
8030	ALLIS-CHALMERS 6-CYL. 426	(81-85)	AIR CONDITIONING	→I SERIAL No. 1906	268485	1472236
				I→ SERIAL No. 1907	273705	0372232
		(81-85)	FAN TO ALTERNATOR	-	273193	1401129
8050	ALLIS-CHALMERS 6-CYL. 426	(81-85)	AIR CONDITIONING	→I SERIAL No. 1836	268485	1472236
				I→ SERIAL No. 1837	273705	0372232
		(81-85)	FAN TO ALTERNATOR	-	273193	1401129
8070	ALLIS-CHALMERS 6-CYL. 426	(81-85)	AIR CONDITIONING	→I SERIAL No. 1350	268485	1472236
				I→ SERIAL No. 1351	273705	0372232
		(81-85)	FAN TO ALTERNATOR	-	273193	1401129
8550	ALLIS-CHALMERS 6-CYL. 731	(77-81)	AIR CONDITIONING	→I SERIAL No. 1635	259363	0172221
				I→ SERIAL No. 1636	256935	1472227
		(77-81)	ALTERNATOR	-	259401	1401101
		(77-81)	FAN	-	259566	0902122
		(77-81)	WATER PUMP	-	4395701	0173227
4W 220	ALLIS-CHALMERS 6-CYL. 426	(81-84)	AIR CONDITIONING	-	273705	0372232
		(81-84)	FAN TO ALTERNATOR	-	273193	1401129
4W 305	ALLIS-CHALMERS 6-CYL. 731	(81-85)	AIR CONDITIONING	-	226935	1472227
		(81-85)	ALTERNATOR	-	259401	1401101
		(81-85)	FAN	-	273419	0102123
		(81-85)	WATER PUMP	-	4396941	0173225
B	ALLIS-CHALMERS 4-CYL. 116	(37-57)	FAN	-	207003	1601066
		(37-57)	FAN TO GENERATOR	-	209656	2501072
				-	215885	2601066
	ALLIS-CHALMERS 4-CYL. 125	(37-57)	FAN	-	207003	1601066
		(37-57)	FAN TO GENERATOR	-	209656	2501072
				-	215885	2601066
	WAUKESHA 4-CYL. 113	(37-57)	FAN	-	207003	1601066
		(37-57)	FAN TO GENERATOR	-	209656	2501072
				-	215885	2601066
C	ALLIS-CHALMERS 4-CYL. 125	(40-50)	FAN	-	207003	1601066
		(40-50)	FAN TO GENERATOR	-	209656	2501072
				-	215885	2601066
	ALLIS-CHALMERS 4-CYL. 125 DISTILLATE	(40-50)	FAN	-	207003	1601066
		(40-50)	FAN TO GENERATOR	-	209656	2501072
				-	215885	2601066
CA	ALLIS-CHALMERS 4-CYL. 125	(50-58)	FAN TO GENERATOR	-	209656	2501072
D10	ALLIS-CHALMERS 4-CYL. 138	(59-67)	FAN TO GENERATOR	→I SERIAL No. D10-3501	209656	2501072
				I→ SERIAL No. D10-3502	233432	0173210
	ALLIS-CHALMERS 4-CYL. 149	(59-67)	FAN TO GENERATOR	→I SERIAL No. D10-3501	209656	2501072
				I→ SERIAL No. D10-3502	233432	0173210

D12	ALLIS-CHALMERS 4-CYL. 138	(59-69)	FAN TO GENERATOR	→I SERIAL No. D12-3001	209656	2501072
				I→ SERIAL No. D12-3002	233432	0173210
	ALLIS-CHALMERS 4-CYL. 149	(59-63)	FAN TO GENERATOR	→I SERIAL No. D12-3001	209656	2501072
				I→ SERIAL No. D12-3002	233432	0173210
D14	POWER-CRATER 4-CYL. 149	(57-60)	FAN TO GENERATOR	+ ELECTRIC START	209656	2501072
				− ELECTRIC START	207003	1601066
	POWER-CRATER 4-CYL. 149 LPG	(57-60)	FAN TO GENERATOR	+ ELECTRIC START	209656	2501072
				− ELECTRIC START	207003	1601066
D15	ALLIS-CHALMERS 4-CYL. 175	(60-62)	FAN TO GENERATOR	-	233489	0172216
	POWER-CRATER 4-CYL. 149	(60-62)	FAN TO GENERATOR	-	233432	0173210
	POWER-CRATER 4-CYL. 149 LPG	(60-62)	FAN TO GENERATOR	-	233432	0173210
D15 SERIES II	ALLIS-CHALMERS 4-CYL. 149	(63-67)	FAN TO GENERATOR	-	233432	0173210
	ALLIS-CHALMERS 4-CYL. 175	(63-67)	FAN TO GENERATOR	-	233489	0172216
D17	ALLIS-CHALMERS 4-CYL. 226	(57-62)	POWER STEERING	I→ SERIAL No. 42001	237386	0172217
		(57-62)	FAN TO GENERATOR	-	229211	0372223
	ALLIS-CHALMERS 6-CYL. 262	(57-62)	POWER STEERING	-	235394	0172208
		(57-62)	FAN TO GENERATOR	→I SERIAL No. 119938	229559	0372223
				I→ SERIAL No. 119939	237048	0372223
D17 SERIES II	ALLIS-CHALMERS 4-CYL. 226	(62-64)	POWER STEERING	I→ SERIAL No. 42001	237386	0172217
		(62-64)	FAN TO GENERATOR	-	229211	0372223
	ALLIS-CHALMERS 6-CYL. 262	(62-64)	POWER STEERING	-	235394	0172208
		(62-64)	FAN TO GENERATOR	→I SERIAL No. 119938	229559	0372223
				I→ SERIAL No. 119939	237048	0372223
D17 SERIES IV	ALLIS-CHALMERS 4-CYL. 226		POWER STEERING	I→ SERIAL No. 42001	237386	0172217
		(64-67)	FAN TO GENERATOR	-	229211	0372223
	ALLIS-CHALMERS 6-CYL. 262	(64-67)	POWER STEERING	-	235394	0172208
		(64-67)	FAN TO GENERATOR	→I SERIAL No. 119938	229559	0372223
				I→ SERIAL No. 119939	237048	0372223
D19	ALLIS-CHALMERS 6-CYL. 262	(61-64)	POWER STEERING	-	235394	0172208
		(61-64)	FAN TO GENERATOR	-	227470	1472227
				-	235353	0372223
D21	ALLIS-CHALMERS 6-CYL. 426	(63-65)	FAN TO ALTERNATOR	→I SERIAL No. 4445	240595	0372245
				I→ SERIAL No. 4446	254350	0372242
D21 SERIES II	ALLIS-CHALMERS 6-CYL. 426	(65-69)	FAN TO ALTERNATOR	→I SERIAL No. 4445	240595	0372245
				I→ SERIAL No. 4446	254350	0372242
G	CONTINENTAL 4-CYL. 62	(48-55)	FAN TO GENERATOR	-	800116	1401081
H3	ALLIS-CHALMERS 4-CYL. 149	(63-68)	FAN TO GENERATOR	-	233432	0173210
H4	ALLIS-CHALMERS 4-CYL. 200	(65-69)	FAN TO ALTERNATOR	-	237048	0372223
				-	245120	0372262
HD10	GM 4-CYL. 284	(40-50)	FAN	-	602944	0201112
HD10W	GM 4-CYL. 284	(40-50)	FAN	-	602944	0201112
HD11	ALLIS-CHALMERS 6-CYL. 516	(55-70)	FAN	→I SERIAL No. 11-4854	4335452	1402127
				I→ SERIAL No. 11-4855	4349778	2602103
				I→ SERIAL No. 13322	4337757	0102108
		(55-70)	WATER PUMP TO GENERATOR	I→ SERIAL No. 13322	4338212	1601103
HD11B	ALLIS-CHALMERS 6-CYL. 516	(71-74)	FAN	→I SERIAL No. 11-4854	4335452	1402127
				I→ SERIAL No. 11-4855	4349778	2602103
				I→ SERIAL No. 13322	4337757	0102108
		(71-74)	WATER PUMP TO GENERATOR	I→ SERIAL No. 13322	4338212	1601103

HD11E	ALLIS-CHALMERS 6-CYL. 516	(63-71)	FAN	→I SERIAL No. 11-4854	4335452	1402127
				I→ SERIAL No. 11-4855	4349778	2602103
				I→ SERIAL No. 13322	4337757	0102108
		(63-71)	WATER PUMP TO GENERATOR	I→ SERIAL No. 13322	4338212	1601103
HD11EP	ALLIS-CHALMERS 6-CYL. 516	(61-71)	FAN	→I SERIAL No. 11-4854	4335452	1402127
				I→ SERIAL No. 11-4855	4349778	2602103
				I→ SERIAL No. 13322	4337757	0102108
		(61-71)	WATER PUMP TO GENERATOR	I→ SERIAL No. 13322	4338212	1601103
HD11ES	ALLIS-CHALMERS 6-CYL. 516	(67-73)	FAN	→I SERIAL No. 11-4854	4335452	1402127
				I→ SERIAL No. 11-4855	4349778	2602103
				I→ SERIAL No. 13322	4337757	0102108
		(67-73)	WATER PUMP TO GENERATOR	I→ SERIAL No. 13322	4338212	1601103
HD11F	ALLIS-CHALMERS 6-CYL. 516	(71-73)	FAN	→I SERIAL No. 11-4854	4335452	1402127
				I→ SERIAL No. 11-4855	4349778	2602103
				I→ SERIAL No. 13322	4337757	0102108
		(71-73)	WATER PUMP TO GENERATOR	I→ SERIAL No. 13322	4338212	1601103
HD11S	ALLIS-CHALMERS 6-CYL. 516	(67-73)	FAN	→I SERIAL No. 11-4854	4335452	1402127
				I→ SERIAL No. 11-4855	4349778	2602103
				I→ SERIAL No. 13322	4337757	0102108
		(67-73)	WATER PUMP TO GENERATOR	I→ SERIAL No. 13322	4338212	1601103
HD14	GM 6-CYL. 426	(39-47)	FAN	-	602944	0201112
HD14C	GM 6-CYL. 426	(39-47)	GENERATOR	-	602944	0201112
HD15	GM 6-CYL. 426	(50-55)	GENERATOR	— TORQUE CONVERTER	602944	0201112
HD15AC	GM 6-CYL. 426	(50-55)	GENERATOR	— TORQUE CONVERTER	602944	0201112
HD16	ALLIS-CHALMERS 6-CYL. 844	(55-70)	WATER PUMP	-	4386813	0201097
		(55-70)	FAN TO GENERATOR	-	86979	2902164
HD16A	ALLIS-CHALMERS 6-CYL. 844	(55-70)	WATER PUMP	-	4386813	0201097
		(55-70)	FAN TO GENERATOR	-	86979	2902164
HD16AC	ALLIS-CHALMERS 6-CYL. 844	(55-70)	WATER PUMP	-	4386813	0201097
		(55-70)	FAN TO GENERATOR	-	86979	2902164
HD16B	ALLIS-CHALMERS 6-CYL. 844	(61-73)	WATER PUMP	-	4386813	0201097
		(61-72)	FAN TO GENERATOR	-	86979	2902164
				-	86979	2902164
HD16D	ALLIS-CHALMERS 6-CYL. 844	(55-70)	WATER PUMP	-	4386813	0201097
		(55-70)	FAN TO GENERATOR	-	86979	2902164
HD16DC	ALLIS-CHALMERS 6-CYL. 844	(55-70)	WATER PUMP	-	4386813	0201097
		(55-70)	FAN TO GENERATOR	-	86979	2902164
HD16DP	ALLIS-CHALMERS 6-CYL. 844	(55-70)	WATER PUMP	-	4386813	0201097
		(55-70)	FAN TO GENERATOR	-	86979	2902164
HD19	GM 6-CYL. 426	(47-50)	FAN	I→ SERIAL No. 1802	67529	2902164
		(47-50)	GENERATOR	-	602944	0201112
HD20	GM 6-CYL. 660	(51-54)	FAN TO GENERATOR	-	67529	2902164
HD21	ALLIS-CHALMERS 6-CYL. 844	(54-69)	FAN	→I SERIAL No. 9001	67529	2902164
		(54-69)	GENERATOR	-	82879	1472236
		(54-69)	WATER PUMP	-	4386813	0201097
HD21A	ALLIS-CHALMERS 6-CYL. 844	(54-69)	FAN	→I SERIAL No. 9001	67529	2902164
		(54-69)	GENERATOR	-	82879	1472236
		(54-69)	WATER PUMP	-	4386813	0201097
HD21AC	ALLIS-CHALMERS 6-CYL. 844	(54-69)	FAN	→I SERIAL No. 9001	67529	2902164
		(54-69)	GENERATOR	-	82879	1472236
		(54-69)	WATER PUMP	-	4386813	0201097

HD3	ALLIS-CHALMERS 4-CYL. 149	(60-68)	FAN TO GENERATOR	-	233432	0173210
	ALLIS-CHALMERS 4-CYL. 175	(60-68)	FAN TO GENERATOR	-	233490	0172216
HD4	ALLIS-CHALMERS 4-CYL. 200	(65-69)	FAN TO ALTERNATOR	-	237048	0372223
				-	245120	0372262
HD41	CUMMINS VT121710	(70-74)	ALTERNATOR	-	-	2501076
		(70-74)	FAN	-	673606	2902164
HD5	GM 2-CYL. 142	(46-55)	FAN TO GENERATOR	-	33138	0501121
HD5A	GM 2-CYL. 142	(46-55)	FAN TO GENERATOR	-	33138	0501121
HD5B	GM 2-CYL. 142	(46-55)	FAN TO GENERATOR	-	33138	0501121
HD6	ALLIS-CHALMERS 4-CYL. 344	(55-74)	FAN	→I SERIAL No. 13321	4348910	2602118
				I→ SERIAL No. 13322	4349777	2502096
				→I SERIAL No. 6-10368	4348910	2602118
				I→ SERIAL No. 6-10369	4349777	2502096
		(55-74)	WATER PUMP TO GENERATOR	I→ SERIAL No. 6-10369	4349729	0701095
HD6A	ALLIS-CHALMERS 4-CYL. 344	(55-74)	FAN	→I SERIAL No. 13321	4348910	2602118
				I→ SERIAL No. 13322	4349777	2502096
				→I SERIAL No. 6-10368	4348910	2602118
				I→ SERIAL No. 6-10369	4349777	2502096
		(55-74)	WATER PUMP TO GENERATOR	I→ SERIAL No. 6-10369	4349729	0701095
HD6B	ALLIS-CHALMERS 4-CYL. 344	(55-74)	FAN	→I SERIAL No. 13321	4348910	2602118
				I→ SERIAL No. 13322	4349777	2502096
				→I SERIAL No. 6-10368	4348910	2602118
				I→ SERIAL No. 6-10369	4349777	2502096
		(55-74)	WATER PUMP TO GENERATOR	I→ SERIAL No. 6-10369	4349729	0701095
HD6E	ALLIS-CHALMERS 4-CYL. 344	(61-74)	FAN	→I SERIAL No. 13321	4348910	2602118
				I→ SERIAL No. 13322	4349777	2502096
				→I SERIAL No. 6-10368	4348910	2602118
				I→ SERIAL No. 6-10369	4349777	2502096
		(61-74)	WATER PUMP TO GENERATOR	I→ SERIAL No. 6-10369	4349729	0701095
HD6EP	ALLIS-CHALMERS 4-CYL. 344	(61-74)	WATER PUMP TO GENERATOR	-	4337725	0201102
HD7	GM 3-CYL. 213	(40-50)	FAN	-	602944	0201112
HD7W	GM 3-CYL. 213	(40-50)	FAN	-	602944	0201112
HD9	GM 4-CYL. 284	(50-55)	FAN	-	33138	0501121
		(50-55)	GENERATOR	→I SERIAL No. 3270	79582	0301080
I-40	ALLIS-CHALMERS 4-CYL. 149	(64-66)	FAN TO GENERATOR	-	233432	0173210
I-400	ALLIS-CHALMERS 4-CYL. 149	(67-68)	FAN TO GENERATOR	-	233432	0173210
I-60	ALLIS-CHALMERS 4-CYL. 160	(65-66)	FAN TO GENERATOR	-	233432	0173210
	ALLIS-CHALMERS 4-CYL. 175	(65-66)	FAN TO GENERATOR	-	233489	0172216
I-600	ALLIS-CHALMERS 4-CYL. 160	(66-68)	FAN TO GENERATOR	-	233432	0173210
	ALLIS-CHALMERS 4-CYL. 175	(66-68)	FAN TO GENERATOR	-	233489	0172216
IB	ALLIS-CHALMERS 4-CYL. 116	(39-58)	FAN	-	207003	1601066
		(39-58)	FAN TO GENERATOR	-	209656	2501072
	ALLIS-CHALMERS 4-CYL. 125	(39-58)	FAN	-	207003	1601066
		(39-58)	FAN TO GENERATOR	-	209656	2501072
ONE-EIGHTY	WEST ALLIS 6-CYL. 265	(67-73)	FAN TO ALTERNATOR	-	243021	1472236
	WEST ALLIS 6-CYL. 301	(67-73)	FAN TO ALTERNATOR	-	243021	1472236
ONE-NINETY	ALLIS-CHALMERS 6-CYL. 265	(64-73)	AIR CONDITIONING	-	246618	0372204
		(64-73)	FAN TO ALTERNATOR	→I SERIAL No. 2G05728	243021	1472236
				I→ SERIAL No. 2G05729	252145	0172235
	ALLIS-CHALMERS 6-CYL. 301	(64-73)	AIR CONDITIONING	-	246618	0372204
		(64-73)	FAN TO ALTERNATOR	→I SERIAL No. 2D25950	252145	0172235
				I→ SERIAL No. 2D25951	255200	0372232

ONE-NINETY XT	ALLIS-CHALMERS 6-CYL. 301	(65-72)	AIR CONDITIONING	-	246618	0372204
		(65-72)	FAN TO ALTERNATOR	-	252145	0172235
				→I SERIAL No. 2D25950	252145	0172235
				I→ SERIAL No. 2D25951	255200	0372232
ONE-SEVENTY	PERKINS 4-CYL. 236	(67-73)	FAN TO ALTERNATOR	-	227470	1472227
	WEST ALLIS 4-CYL. 226	(67-73)	FAN TO ALTERNATOR	-	248316	0172225
ONE-SIXTY	PERKINS 3-CYL. 153	(69-71)	POWER STEERING	-	2073746	0172192
		(69-71)	FAN TO GENERATOR	-	2074320	0372231
TWO-TEN	ALLIS-CHALMERS 6-CYL. 426	(70-73)	FAN TO ALTERNATOR	-	254351	0372242
TWO-TWENTY	ALLIS-CHALMERS 6-CYL. 426	(69-73)	FAN TO ALTERNATOR	-	254351	0372242
WC	ALLIS-CHALMERS 4-CYL. 201	(33-48)	FAN	-	203073	1401081
	ALLIS-CHALMERS 4-CYL. 201 DISTILLATE	(33-48)	FAN	-	203073	1401081
WD	ALLIS-CHALMERS 4-CYL. 201	(48-53)	FAN	-	203073	1401081
	ALLIS-CHALMERS 4-CYL. 201 DISTILLATE	(48-53)	FAN	-	203073	1401081
WD45	ALLIS-CHALMERS 4-CYL. 226	(53-57)	POWER STEERING	-	227398	0272247
	ALLIS-CHALMERS 6-CYL. 230	(53-57)	POWER STEERING	-	227398	0272247
		(53-57)	FAN TO GENERATOR	→I SERIAL No. 77855	226935	1472227
				I→ SERIAL No. 77856	227470	1472227
WF	ALLIS-CHALMERS 4-CYL. 201	(37-51)	FAN	-	203073	1401081
WK	ALLIS-CHALMERS 4-CYL. 510	(39)	FAN	-	203073	1401081
ANTONIO CARRARO						
5500	CARRARO 49 H.P.	(01)	FAN TO ALTERNATOR	-	-	0173212
	CARRARO 64 H.P.	(01)	FAN TO ALTERNATOR	-	-	0173212
7500	CARRARO 49 H.P.	(01)	FAN TO ALTERNATOR	-	-	0173212
	CARRARO 64 H.P.	(01)	FAN TO ALTERNATOR	-	-	0173212
7700	CARRARO 49 H.P.	(01)	FAN TO ALTERNATOR	-	-	0173212
	CARRARO 4-CYL.	(01)	FAN TO ALTERNATOR	-	-	0173210
	CARRARO 64 H.P.	(01)	FAN TO ALTERNATOR	-	-	0173212
BITRAC HS	CARRARO 2-CYL.	(01)	FAN TO ALTERNATOR	-	-	0173209
BELARUS						
310	BELARUS 2-CYL. 127	(89-96)	GENERATOR TO BLOWER	-	-	0173232
420	BELARUS 4-CYL. 253	(78-83)	ALTERNATOR TO BLOWER	-	D37E1308021	0173235
560	BELARUS 4-CYL. 290	(81-91)	ALTERNATOR	+ AIR CONDITIONING	-	0172189
		(81-91)	FAN TO AIR CONDITIONING	-	-	0101099
562	BELARUS 4-CYL. 290	(81-91)	ALTERNATOR	+ AIR CONDITIONING	-	0172189
		(81-91)	FAN TO AIR CONDITIONING	-	-	0101099
800	BELARUS 4-CYL. 290	(77-97)	ALTERNATOR	+ AIR CONDITIONING	-	0172188
		(77-97)	FAN TO AIR CONDITIONING	-	-	0372232
		(77-97)	FAN TO ALTERNATOR	-	-	1473236
802	BELARUS 4-CYL. 290	(77-96)	ALTERNATOR	+ AIR CONDITIONING	-	0172188
		(77-96)	FAN TO AIR CONDITIONING	-	-	0372232
		(77-96)	FAN TO ALTERNATOR	-	-	1473236
822	BELARUS 4-CYL. 290	(81-93)	ALTERNATOR	+ AIR CONDITIONING	-	0172188
		(81-93)	FAN TO AIR CONDITIONING	-	-	0372232
		(81-93)	FAN TO ALTERNATOR	-	-	1473236
925	BELARUS 4-CYL. 290	(91-97)	FAN TO ALTERNATOR	-	-	0372232
		(91-97)	AIR CONDITIONING, ALTERNATOR TO IDLER	-	-	0172189
1500	BELARUS V-6 558	(78-86)	FAN TO ALTERNATOR	-	-	0372223
1770	BELARUS V-6 558	(86-95)	FAN TO ALTERNATOR	-	-	0172221
		(86-95)	FAN, ALTERNATOR TO AIR CONDITIONING	-	22490	0701095

250A	VLADIMIR 2-CYL. 127	(79-87)	GENERATOR TO BLOWER	-	-	1473236
250AS	VLADIMIR 2-CYL. 127	(85-96)	GENERATOR TO BLOWER	-	-	0173232
400A	BELARUS 4-CYL. 253	(77-97)	ALTERNATOR TO BLOWER	-	D37E1308021	0173235
400AN	BELARUS 4-CYL. 253	(77-97)	ALTERNATOR TO BLOWER	-	D37E1308021	0173235
420A	BELARUS 4-CYL. 253	(76-97)	ALTERNATOR TO BLOWER	-	-	1573238
420AN	BELARUS 4-CYL. 253	(76-97)	ALTERNATOR TO BLOWER	-	-	1573238
BIG BUD						
450/50	CUMMINS 6-CYL. 1150	(79-80)	AIR CONDITIONING	-	-	0122155
		(79-80)	ALTERNATOR	-	206996	2988238
525/50	CUMMINS 6-CYL. 1150	(79-82)	AIR CONDITIONING	-	-	0122155
		(79-82)	ALTERNATOR	-	206996	2988238
CASE						
310	CASE 4-CYL. 148	(57-63)	POWER STEERING	-	G46083	0173190
		(57-63)	FAN TO GENERATOR	⟼ SERIAL No. 3012301	G46238	1472227
	CASE 4-CYL. 188	(58-63)	POWER STEERING	-	G46083	0173190
		(58-63)	FAN TO GENERATOR	⟼ SERIAL No. 3012301	G46238	1472227
320	CONTINENTAL 4-CYL. 148	(57-58)	FAN, GENERATOR TO S.P.	-	G46083	0173190
350	CASE 4-CYL. 188	(70-79)	FAN TO ALTERNATOR	-	G46238	1472227
351	CASE 4-CYL. 164	(56-58)	POWER STEERING	-	G46083	0173190
430	CASE 4-CYL. 148	(60-69)	FAN TO GENERATOR	-	G46238	1472227
	CASE 4-CYL. 188	(60-69)	FAN TO GENERATOR	-	G46238	1472227
441	CASE 4-CYL. 148	(60)	FAN TO GENERATOR	-	G46238	1472227
450	CASE 4-CYL. 188	(65-79)	FAN TO GENERATOR	-	G46238	1472227
475	CASE 301BD	(72-86)	FAN TO ALTERNATOR	-	L49006	0372244
484	CASE 3-CYL. 179	(78-84)	FAN TO ALTERNATOR	-	3113329R1	0172253
				-	3129140R1	1472251
500	CASE 6-CYL. 377	(53-56)	POWER STEERING	-	010288AB	0173190
		(53-56)	FAN TO GENERATOR	-	09802AB	0302098
530	CASE 4-CYL. 159	(60-69)	FAN TO GENERATOR	-	G46238	1472227
	CASE 4-CYL. 188	(60-69)	FAN TO GENERATOR	-	G46238	1472227
540	CASE 4-CYL. 159	(60-69)	FAN TO GENERATOR	-	G46238	1472227
	CASE 4-CYL. 188	(60-69)	FAN TO GENERATOR	-	G46238	1472227
600	CASE 6-CYL. 377	(57)	POWER STEERING	-	010288AB	0173190
		(57)	FAN TO GENERATOR	-	09802AB	0302098
630	CASE 4-CYL. 188	(60-63)	FAN TO GENERATOR	-	G46238	1472227
640	CASE 4-CYL. 188	(60-63)	FAN TO GENERATOR	-	G46238	1472227
730	CASE 4-CYL. 251	(60-69)	POWER STEERING	⟶I SERIAL No. 8173400	A11441	0173194
				I⟶ SERIAL No. 8173401	A22765	0173199
		(60-69)	FAN TO GENERATOR	-	A21457	0372232
	CASE 4-CYL. 267	(60-69)	POWER STEERING	⟶I SERIAL No. 8173400	A11441	0173194
				I⟶ SERIAL No. 8173401	A22765	0173199
		(60-69)	FAN TO GENERATOR	-	A21457	0372232
741	CASE 4-CYL. 251	(60)	POWER STEERING	⟶I SERIAL No. 8173400	A11441	0173194
				I⟶ SERIAL No. 8173401	A22765	0173199
		(60)	FAN TO GENERATOR	-	A21457	0372232
750	CASE A267D	(61-67)	FAN TO GENERATOR	-	A19920	2601106
770	CASE 4-CYL. 251	(69-72)	AIR CONDITIONING	-	-	0372272
		(69-72)	FAN TO ALTERNATOR	-	A59762	0301118
	CASE 4-CYL. 267	(69-72)	AIR CONDITIONING	-	-	0372272
		(69-72)	FAN TO ALTERNATOR	-	A59762	0301118

830	CASE 4-CYL. 284	(60-69)	POWER STEERING	→I SERIAL No. 8173400	A11441	0173194
				I→ SERIAL No. 8173401	A22765	0173199
		(60-69)	FAN TO GENERATOR	-	A21457	0372232
	CASE 4-CYL. 301	(60-69)	POWER STEERING	→I SERIAL No. 8173400	A11441	0173194
				I→ SERIAL No. 8173401	A22765	0173199
		(60-69)	FAN TO GENERATOR	-	A21457	0372232
841	CASE 4-CYL. 284	(60-63)	POWER STEERING	→I SERIAL No. 8173400	A11441	0173194
				I→ SERIAL No. 8173401	A22765	0173199
		(60-63)	FAN TO GENERATOR	-	A21457	0372232
850	CASE A301BD	(67-81)	FAN TO ALTERNATOR	-	D43913	2601106
870	CASE 4-CYL. 336	(69-74)	AIR CONDITIONING	-	A65717	0372272
		(69-74)	FAN TO ALTERNATOR	-	A59762	0301118
910	CASE 6-CYL. 377 LPG	(57-59)	POWER STEERING	-	010288AB	0173190
		(57-59)	FAN TO GENERATOR	-	011139AB	0422134
930	CASE 6-CYL. 377	(60-69)	POWER STEERING	-	A22766	0173195
		(60-69)	FAN TO GENERATOR	-	A21461	0422134
	CASE 6-CYL. 377 LPG	(60-69)	POWER STEERING	-	A22766	0173195
		(60-69)	FAN TO GENERATOR	-	A21461	0422134
	CASE 6-CYL. 401	(60-69)	POWER STEERING	-	A22766	0173195
		(60-69)	FAN TO GENERATOR	-	A21461	0422134
940	CASE 6-CYL. 377 LPG	(60-69)	POWER STEERING	-	A22766	0173195
		(60-69)	FAN TO GENERATOR	-	A21461	0422134
970	CASE 6-CYL. 401	(69-78)	AIR CONDITIONING	SERIAL No. 8693001 → 8705614	A65717	0372272
1000	CONTINENTAL JD382	(57-65)	FAN TO GENERATOR	I→ SERIAL No. 7101202	R17745	2602118
				→I SERIAL No. 7101201	73430	0102114
1010	CONTINENTAL JD382	(57-65)	FAN TO GENERATOR	I→ SERIAL No. 7101202	R17745	2602118
				→I SERIAL No. 7101201	73430	0102114
1030	CASE 6-CYL. 451	(66-69)	POWER STEERING	I→ SERIAL No. 8310335	-	0301118
				→I SERIAL No. 8310335	A34359	0173244
		(66-69)	FAN TO GENERATOR	→I SERIAL No. 8310335	-	1472236
				I→ SERIAL No. 8310336	A57123	1601103
1070	CASE 6-CYL. 451	(69-78)	FAN TO ALTERNATOR	-	A62962	0372275
1090	CASE 6-CYL. 451	(70-71)	AIR CONDITIONING	→I SERIAL No. 8693000	A65717	0372272
		(70-71)	FAN TO ALTERNATOR	-	A62962	0372275
1150	CASE A401BD	(65-72)	FAN TO GENERATOR	-	D43913	2601106
1170	CASE 6-CYL. 451	(70-71)	AIR CONDITIONING	-	A62962	0372275
1190	CASE 3-CYL. 164	(80-83)	ALTERNATOR	-	-	0173199
		(80-83)	FAN	-	K949311	0173232
		(80-83)	WATER PUMP TO ALTERNATOR	-	K949311	0173232
		(80-83)	FAN TO HYDRAULIC PUMP	-	-	0173219
1194	CASE 3-CYL. 164	(83-85)	FAN TO ALTERNATOR	-	-	0173199
		(83-85)	FAN TO POWER STEERING	-	-	0173220
1270	CASE 6-CYL. 451	(71-78)	AIR CONDITIONING	-	A65716	0372272
1290	CASE 4-CYL. 195	(80-84)	FAN TO ALTERNATOR	-	K68073	0373225
1294	CASE 4-CYL. 219	(83-85)	FAN TO ALTERNATOR	-	-	0273228
1370	CASE 6-CYL. 504	(71-78)	AIR CONDITIONING	-	A65716	0372272
1390	CASE 4-CYL. 219	(80-83)	FAN TO ALTERNATOR	-	K68073	0373225
1394	CASE 4-CYL. 219	(83-90)	FAN TO ALTERNATOR	-	-	0373225
1410	DAVID BROWN 4-CYL. 219	(76-80)	FAN TO ALTERNATOR	-	K68073	0373225
1412	DAVID BROWN 4-CYL. 219	(75-77)	FAN TO ALTERNATOR	-	K68073	0373225
1490	CASE 4-CYL. 219	(80-83)	FAN TO ALTERNATOR	-	K68073	0373225

1494	CASE 4-CYL. 219	(83-90)	AIR CONDITIONING	-	K307429	1272212
		(83-90)	FAN TO ALTERNATOR	+ AIR CONDITIONING	K308448	0422134
				− AIR CONDITIONING	K68073	0373225
1570	CASE 6-CYL. 504	(76-78)	AIR CONDITIONING	-	A65716	0372272
1594	CASE 6-CYL. 329	(83-90)	AIR CONDITIONING	-	-	0172235
		(83-90)	FAN	-	-	0173234
		(83-90)	WATER PUMP TO ALTERNATOR	-	-	0173232
1690	CASE 6-CYL. 329	(80-84)	AIR CONDITIONING	-	A162484	0372262
		(80-84)	FAN	-	K949311	0173232
2090	CASE 6-CYL. 504	(78-83)	AIR CONDITIONING	-	A9628	0172220
		(78-83)	FAN TO ALTERNATOR	-	A145325	0301118
2094	CASE 6-CYL. 504	(83-84)	FAN TO AIR CONDITIONING	-	A9628	0172220
		(83-84)	FAN TO ALTERNATOR	+ AIR CONDITIONING	A145325	0301118
				− AIR CONDITIONING	A57130	0301118
2290	CASE 6-CYL. 504	(78-83)	AIR CONDITIONING	-	A9628	0172220
		(78-83)	FAN TO ALTERNATOR	-	A145325	0301118
2294	CASE 6-CYL. 504	(83-87)	FAN TO AIR CONDITIONING	-	A9628	0172220
		(83-87)	FAN TO ALTERNATOR	+ AIR CONDITIONING	A145325	0301118
				− AIR CONDITIONING	A57130	0301118
2390	CASE 6-CYL. 504	(78-83)	AIR CONDITIONING	-	A9628	0172220
		(78-83)	FAN TO ALTERNATOR	-	A145325	0301118
2394	CASE 6-CYL. 504	(83-87)	FAN TO AIR CONDITIONING	-	A9628	0172220
		(83-87)	FAN TO ALTERNATOR	+ AIR CONDITIONING	A145325	0301118
				− AIR CONDITIONING	A57130	0301118
2470	CASE 6-CYL. 504	(71-79)	AIR CONDITIONING	-	A135265	1472227
				-	A75577	0172219
				-	A76758	0372223
		(71-79)	FAN TO ALTERNATOR	-	A61048	0201112
2590	CASE 6-CYL. 504	(78-83)	AIR CONDITIONING	-	A9628	0172220
		(78-83)	FAN TO ALTERNATOR	-	A145325	0301118
2594	CASE 6-CYL. 504	(83-87)	AIR CONDITIONING	-	A9628	0172220
		(83-87)	FAN TO ALTERNATOR	-	A145325	0301118
2670	CASE 6-CYL. 504	(74-79)	AIR CONDITIONING	-	A135265	1472227
		(74-79)	FAN TO ALTERNATOR	-	A77082	0501121
2870	SCANIA 6-CYL. 673	(76-79)	AIR CONDITIONING	-	A138760	0372231
		(76-79)	FAN TO ALTERNATOR	-	A138001	0172253
3294	CASE 6-CYL. 504	(83-86)	FAN TO AIR CONDITIONING	-	A9628	0172220
		(83-86)	FAN TO ALTERNATOR	+ AIR CONDITIONING	A145325	0301118
				− AIR CONDITIONING	A57130	0301118
4490	CASE 6-CYL. 504	(79-83)	AIR CONDITIONING	-	A135265	1472227
		(79-83)	FAN TO ALTERNATOR	-	A61048	0201112
4494	CASE 6-CYL. 504	(84-87)	AIR CONDITIONING	-	A135265	1472227
		(84-87)	FAN TO ALTERNATOR	-	A61048	0201112
4690	CASE 6-CYL. 504	(79-83)	AIR CONDITIONING	-	A139265	0422134
		(79-83)	FAN TO ALTERNATOR	-	A76745	0301118
4694	CASE 6-CYL. 504	(84-87)	FAN TO ALTERNATOR	-	A76745	0301118
4890	SCANIA 6-CYL. 673	(79-83)	AIR CONDITIONING	-	A138760	0372231
		(79-83)	FAN TO ALTERNATOR	-	A138001	0172253
4894	SCANIA 6-CYL. 673	(84-87)	AIR CONDITIONING	-	A34820	0422134
		(84-87)	FAN TO ALTERNATOR	-	A138001	0172253
4994	SCANIA V-8 866	(84-88)	AIR CONDITIONING	-	-	0172219
		(84-88)	FAN TO ALTERNATOR	-	L50593	0422134

1150G	CASE 6T590	(97-00)	AIR CONDITIONING	-	S82985	0372204
		(97-00)	FAN TO ALTERNATOR	-	J911559	2385277
1200 TRACTION KING	CASE 6-CYL. 451	(64-69)	VACUUM PUMP	-	L10746	0173222
		(64-69)	FAN TO GENERATOR	-	-	1472236
1470 TRACTION KING	CASE 6-CYL. 504	(68-72)	AIR CONDITIONING	EARLY	T39995	1272212
				+ IDLER	A65716	0372272
		(68-72)	FAN TO ALTERNATOR	-	T38546	1401127
300 SERIES	CASE 4-CYL. 148	(56-59)	POWER STEERING	-	G46083	0173190
	CONTINENTAL 4-CYL. 157	(56-59)	FAN TO GENERATOR	-	G11233	0172220
350 UTILITY	CASE 4-CYL. 164	(57-58)	POWER STEERING	-	G46083	0173190
380CK INDUSTRIAL	DAVID BROWN 3-CYL. 164	(74-80)	FAN TO ALTERNATOR	-	-	0173198
		(74-80)	FAN TO POWER STEERING	-	-	0173220
400 SERIES	CASE 4-CYL. 148	(58-59)	FAN TO GENERATOR	-	011139AB	0422134
	CASE 4-CYL. 251	(55-58)	FAN TO GENERATOR	-	011139AB	0422134
410B INDUSTRIAL	CASE 4-CYL. 148	(58-59)	POWER STEERING	-	G46083	0173190
411B INDUSTRIAL	CASE 4-CYL. 148	(58-59)	POWER STEERING	-	G46083	0173190
420B INDUSTRIAL	CASE 4-CYL. 148	(55-59)	FAN, GENERATOR TO S.P.	-	G46083	0173190
		(55-59)	FAN TO GENERATOR - RIGHT SIDE	-	G46238	1472227
420C INDUSTRIAL	CASE 4-CYL. 148	(60-62)	FAN TO GENERATOR	-	G46238	1472227
	CASE 4-CYL. 188	(60-62)	FAN TO GENERATOR	-	G46238	1472227
480B INDUSTRIAL	CASE 4-CYL. 188	(66-75)	FAN TO ALTERNATOR	-	A38824	0422134
500B	CONTINENTAL ED208	(58-59)	POWER STEERING	-	G46083	0173190
	CONTINENTAL F209	(57-59)	POWER STEERING	-	G46083	0173190
550G	CASE 4-CYL. 390	(97-00)	FAN TO ALTERNATOR	-	J911563	0785286
600 CRAWLER	CONTINENTAL ED208	(57-62)	FAN TO GENERATOR	→I SERIAL No. 7060734	10148	0272218
				I→ SERIAL No. 7060735	R12232	0172219
	CONTINENTAL F209	(57-62)	FAN TO GENERATOR	-	31170	2502096
600B	CONTINENTAL ED208	(57-62)	POWER STEERING	-	G46083	0173190
	CONTINENTAL F209	(57-62)	POWER STEERING	-	G46083	0173190
610 CRAWLER	CONTINENTAL ED208	(57-62)	FAN TO GENERATOR	→I SERIAL No. 7060734	10148	0272218
				I→ SERIAL No. 7060735	R12232	0172219
640C	CASE 4-CYL. 188	(60)	FAN TO GENERATOR	-	G46238	1472227
650G	CASE 4-CYL. 390	(95-00)	AIR CONDITIONING	-	S82985	0372204
		(95-00)	FAN TO ALTERNATOR	-	J911559	2385277
700 SERIES	CASE 4-CYL. 267	(58-60)	POWER STEERING	-	A11441	0173194
		(58-60)	FAN TO GENERATOR	-	A11444	0372232
741C	CASE 4-CYL. 251	(60)	POWER STEERING	→I SERIAL No. 8173400	A11441	0173194
				I→ SERIAL No. 8173401	A22765	0173199
		(60)	FAN TO GENERATOR	-	A21457	0372232
780 INDUSTRIAL	CASE A336BD	(71-81)	AIR BRAKE COMPRESSOR	-	L47236	0172219
		(71-81)	FAN TO ALTERNATOR	-	L19082	0372240
800 SERIES	CASE 4-CYL. 267	(58-59)	POWER STEERING	-	A11441	0173194
		(58-59)	FAN TO GENERATOR	-	A11444	0372232
841C	CASE 4-CYL. 284	(60-63)	POWER STEERING	→I SERIAL No. 8173400	A11441	0173194
				I→ SERIAL No. 8173401	A22765	0173199
		(60-63)	FAN TO GENERATOR	-	A21457	0372232
841CK	CASE 4-CYL. 284	(60-63)	POWER STEERING	→I SERIAL No. 8173400	A11441	0173194
				I→ SERIAL No. 8173401	A22765	0173199
		(60-63)	FAN TO GENERATOR	-	A21457	0372232

850G	CASE 6-CYL. 590	(95-00)	AIR CONDITIONING	-	S82985	0372204
		(95-00)	FAN TO ALTERNATOR	-	J911559	2385277
900 SERIES	CASE 6-CYL. 377	(57-59)	POWER STEERING	-	010288AB	0173190
		(57-59)	FAN TO GENERATOR	-	011139AB	0422134
	CASE 6-CYL. 377 LPG	(57-59)	POWER STEERING	-	010288AB	0173190
		(57-59)	FAN TO GENERATOR	-	011139AB	0422134
CASE INTL. HARVESTER						
234	MITSUBISHI 3-CYL. 52	(85-86)	FAN TO ALTERNATOR	-	MD007528	0173208
235	MITSUBISHI 3-CYL. 52	(87-90)	FAN TO ALTERNATOR	-	MD007528	0173208
244	MITSUBISHI 3-CYL. 60	(85-86)	FAN TO ALTERNATOR	-	MD007528	0173208
245	MITSUBISHI 3-CYL. 60	(87-90)	FAN TO ALTERNATOR	-	MD007528	0173208
254	MITSUBISHI 3-CYL. 65	(85-86)	FAN TO ALTERNATOR	-	MD007528	0173208
255	MITSUBISHI 3-CYL. 65	(87-90)	FAN TO ALTERNATOR	-	MD007528	0173208
265	MITSUBISHI 3-CYL. 79	(87-91)	FAN TO ALTERNATOR	-	MB041704	0173212
274	NISSAN 3-CYL. 99	(79-88)	FAN TO ALTERNATOR	-	197810984	0272210
275	MITSUBISHI 3-CYL. 91	(86-91)	FAN TO ALTERNATOR	-	1962770C1	0173212
385	CASE IH 3-CYL. 155	(85-90)	FAN TO ALTERNATOR	-	131303C91	0122155
395	CASE IH 3-CYL. 155	(91-94)	FAN TO ALTERNATOR	-	131303C91	0122155
485	CASE 3-CYL. 179	(85-90)	FAN TO ALTERNATOR	-	131303C91	0122155
495	CASE 3-CYL. 179	(91-94)	FAN TO ALTERNATOR	-	3129140R1	1472251
585	CASE 4-CYL. 206	(85-90)	FAN TO ALTERNATOR	-	131303C91	0122155
595	CASE IH 4-CYL. 206	(91-94)	FAN TO ALTERNATOR	+ AIR CONDITIONING	1607227C1	0372255
				− AIR CONDITIONING	3129140R1	1472251
685	CASE 4-CYL. 239	(86-90)	FAN TO ALTERNATOR	-	131303C91	0122155
695	CASE 4-CYL. 239	(91-94)	FAN TO ALTERNATOR	+ AIR CONDITIONING	1607227C1	0372255
				− AIR CONDITIONING	3129140R1	1472251
885	CASE 4-CYL. 268	(86-90)	FAN TO ALTERNATOR	-	3129140R1	1472251
895	CASE IH 4-CYL. 268	(91-94)	FAN TO ALTERNATOR	-	-	0372255
995	CASE 4-CYL. 268	(91)	FAN	-	3129139R1	0172253
1120	MITSUBISHI 3-CYL. 65	(91)	FAN TO ALTERNATOR	-	-	0173206
1130	MITSUBISHI 3-CYL. 75	(91)	FAN TO ALTERNATOR	-	-	0173206
1140	MITSUBISHI 3-CYL. 91	(91)	FAN TO ALTERNATOR	-	MD027458	0173209
1394	CASE 4-CYL. 219	(83-90)	FAN TO ALTERNATOR	-	-	0373225
1494	CASE 4-CYL. 219	(83-90)	AIR CONDITIONING	-	K307429	1272212
		(83-90)	FAN TO ALTERNATOR	+ AIR CONDITIONING	K308448	0422134
				− AIR CONDITIONING	K68073	0373225
1594	CASE 6-CYL. 329	(83-90)	AIR CONDITIONING	-	-	0172235
		(83-90)	FAN	-	-	0173234
		(83-90)	WATER PUMP TO ALTERNATOR	-	-	0173232
1896	CASE 6-CYL. 359	(85-92)	FAN TO AIR CONDITIONING	-	A169970	0272210
		(85-92)	FAN TO ALTERNATOR	-	3902309	1585280
				-	J903099	0785278
2096	CASE 6-CYL. 359	(85-92)	FAN TO AIR CONDITIONING	-	A169970	0272210
		(85-92)	FAN TO ALTERNATOR	-	3902309	1585280
				-	J903099	0785278
3220	CASE 3-CYL. 179	(94-97)	AIR CONDITIONING	-	84657C1	0372262
3230	CASE 4-CYL. 206	(94-97)	AIR CONDITIONING	-	84657C1	0372262
3394	CASE 6-CYL. 504	(85-87)	FAN TO AIR CONDITIONING	-	A9628	0172220
		(85-87)	FAN TO ALTERNATOR	-	A145325	0301118
3594	CASE 6-CYL. 504	(85-87)	FAN TO AIR CONDITIONING	-	A9628	0172220
		(85-87)	FAN TO ALTERNATOR	+ AIR CONDITIONING	A145325	0301118
				− AIR CONDITIONING	A57130	0301118

4210	CASE 4-CYL. 239	(94-97)	FAN TO AIR CONDITIONING	-	84657C1	0372262
		(94-97)	FAN TO ALTERNATOR	-	3128140R1	1472251
4230	CASE 4-CYL. 268	(94-97)	FAN TO AIR CONDITIONING	-	84657C1	0372262
		(94-97)	FAN TO ALTERNATOR	-	3128140R1	1472251
4240	CASE 4-CYL. 268	(94-97)	FAN TO ALTERNATOR	-	-	0372255
4494	CASE 6-CYL. 504	(84-88)	AIR CONDITIONING	-	A135265	1472227
		(84-88)	FAN TO ALTERNATOR	-	A61048	0201112
5120	CASE 4-CYL. 239	(90-92)	AIR CONDITIONING	-	84766C1	0272210
				-	A184652	0172211
		(90-92)	FAN TO ALTERNATOR	-	J911558	0285271
				-	J911562	0785269
5130	CASE 6-CYL. 359	(90-92)	AIR CONDITIONING	-	84766C1	0272210
				-	A184652	0172211
		(90-92)	FAN TO ALTERNATOR	-	J911558	0285271
				-	J911562	0785269
5140	CASE 6-CYL. 359	(90-92)	AIR CONDITIONING	-	84766C1	0272210
				-	A184652	0172211
		(90-92)	FAN TO ALTERNATOR	-	J911558	0285271
				-	J911562	0785269
9110	CASE 6-CYL. 505	(86-90)	AIR CONDITIONING	-	061451A	0172235
		(86-90)	FAN TO ALTERNATOR	-	3905866	0185275
9130	CASE 6-CYL. 505	(86-90)	AIR CONDITIONING	-	061451A	0172235
		(86-90)	FAN TO ALTERNATOR	-	3905866	0185275
9150	CUMMINS 6-CYL. 611	(86-90)	AIR CONDITIONING	-	16864	0272210
		(86-90)	ALTERNATOR	-	3037425	2388232
		(86-90)	FAN	-	3034942	0285249
9170	CUMMINS 6-CYL. 855	(86-90)	AIR CONDITIONING	-	-	0272210
		(86-90)	ALTERNATOR	-	3030103	0372223
		(86-90)	FAN	+ V-RIBBED BELT DRIVE	-	1285238
		(86-90)	WATER PUMP	-	-	2484242
9180	CUMMINS 6-CYL. 855	(86-90)	AIR CONDITIONING	-	-	0272210
		(86-90)	ALTERNATOR	-	3030103	0372223
		(86-90)	FAN	+ V-RIBBED BELT DRIVE	-	1285238
		(86-90)	WATER PUMP	-	-	2484242
9210	CASE 6-CYL. 505	(90-95)	ALTERNATOR	-	J911557	0785267
9230	CASE 6-CYL. 505	(90-95)	FAN TO ALTERNATOR	-	3905866	0185275
9240	CASE 6-CYL. 505	(90-95)	AIR CONDITIONING	-	061451A	0172235
		(90-95)	FAN TO ALTERNATOR	-	J911572	0785286
9250	CUMMINS 6-CYL. 611	(90-95)	AIR CONDITIONING	-	1250587C1	0272215
				-	907190T1	1272212
		(90-95)	FAN	-	3034943	0285257
		(90-95)	WATER PUMP TO ALTERNATOR	-	3037425	2388232
9260	CUMMINS 6-CYL. 611	(90-95)	AIR CONDITIONING	-	1250587C1	0272215
				-	907190T1	1272212
		(90-95)	FAN	-	3034943	0285257
		(90-95)	WATER PUMP TO ALTERNATOR	-	3037425	2388232
9270	CUMMINS 6-CYL. 855	(90-95)	AIR CONDITIONING	-	83695	0372242
				-	3040291	1272212
				-	-	0272210
				+ V-RIBBED BELT DRIVE	217638	2484242
		(90-95)	ALTERNATOR	-	-	0372223
		(90-95)	WATER PUMP	-	-	2484242

9280	CUMMINS 6-CYL. 855	(90-95)	AIR CONDITIONING	-	83695	0372242
				-	3040291	1272212
				+ V-RIBBED BELT DRIVE	217638	2484242
		(90-95)	ALTERNATOR	-	-	0372223
		(90-95)	WATER PUMP	-	-	2484242
9390	CUMMINS N14	(96-00)	AIR CONDITIONING	-	907190T1	1272212
		(96-00)	ALTERNATOR	-	908383T1	0742158
		(96-00)	WATER PUMP	-	902383T1	2484242
5220 MAXXUM	CASE 4-CYL. 239	(92-97)	AIR CONDITIONING	-	84766C1	0272210
				-	A184652	0172211
		(92-97)	FAN TO ALTERNATOR	-	J911558	0285271
				-	J911562	0785269
5230 MAXXUM	CASE 6-CYL. 359	(92-97)	AIR CONDITIONING	-	84766C1	0272210
				-	A184652	0172211
		(92-97)	FAN TO ALTERNATOR	-	J911558	0285271
				-	J911562	0785269
5240 MAXXUM	CASE 6-CYL. 359	(92-97)	AIR CONDITIONING	-	84766C1	0272210
				-	A184652	0172211
		(92-97)	FAN TO ALTERNATOR	-	J911558	0285271
				-	J911562	0785269
5250 MAXXUM	CASE 6-CYL. 359	(92-97)	AIR CONDITIONING	-	84766C1	0272210
		(92-97)	ALTERNATOR	-	J911562	0785269
7110 MAGNUM	CASE 6T830	(87-93)	AIR CONDITIONING	-	131403C1	0173210
		(87-93)	FAN, WATER PUMP TO ALTERNATOR	-	J911567	0785276
7120 MAGNUM	CASE 6T830	(87-95)	AIR CONDITIONING	-	131403C1	0173210
		(87-95)	FAN, WATER PUMP TO ALTERNATOR	-	J911567	0785276
7130 MAGNUM	CASE 6-CYL. 505	(87-95)	AIR CONDITIONING	-	131403C1	0173210
		(87-95)	FAN TO ALTERNATOR	-	J911567	0785276
7140 MAGNUM	CASE 6-CYL. 505	(87-93)	AIR CONDITIONING	-	131403C1	0173210
		(87-93)	FAN TO ALTERNATOR	-	J911567	0785276
7150 MAGNUM	CASE 6-CYL. 505	(90-93)	AIR CONDITIONING	-	131403C1	0173210
		(90-93)	FAN TO ALTERNATOR	-	J911567	0785276
7210 MAGNUM	CASE 6-CYL. 505	(93-96)	AIR CONDITIONING	-	131403C1	0173210
		(93-96)	FAN, WATER PUMP TO ALTERNATOR	-	J911567	0785276
7220 MAGNUM	CASE 6-CYL. 505	(93-96)	AIR CONDITIONING	-	131403C1	0173210
		(93-96)	FAN, WATER PUMP TO ALTERNATOR	-	J911567	0785276
7230 MAGNUM	CASE 6-CYL. 505	(93-96)	AIR CONDITIONING	-	131403C1	0173210
		(93-96)	FAN TO ALTERNATOR	-	J911567	0785276
7240 MAGNUM	CASE 6-CYL. 505	(93-96)	AIR CONDITIONING	-	131403C1	0173210
		(93-96)	FAN TO ALTERNATOR	-	J911567	0785276
7250 MAGNUM	CASE 6-CYL. 505	(93-96)	AIR CONDITIONING	-	131403C1	0173210
		(93-96)	FAN TO ALTERNATOR	-	J911567	0785276
8910 MAGNUM	CASE 6-CYL. 505	(97-99)	FAN TO AIR CONDITIONING	-	131403C1	0173210
		(97-99)	FAN TO ALTERNATOR	-	J911567	0785276
8920 MAGNUM	CASE 6-CYL. 505	(97-99)	FAN TO AIR CONDITIONING	-	131403C1	0173210
		(97-99)	FAN TO ALTERNATOR	-	J911567	0785276
8930 MAGNUM	CASE 6-CYL. 505	(97-99)	FAN TO AIR CONDITIONING	-	131403C1	0173210
		(97-99)	FAN, WATER PUMP TO ALTERNATOR	-	J911567	0785276
8940 MAGNUM	CASE 6-CYL. 505	(97-99)	FAN TO AIR CONDITIONING	-	131403C1	0173210
		(99)	FAN TO ALTERNATOR	-	J911567	0785276
		(97-98)	FAN, WATER PUMP TO ALTERNATOR	-	J911567	0785276

8950 MAGNUM	CASE 6-CYL. 505	(97-99)	FAN TO AIR CONDITIONING	-	131403C1	0173210
		(97-99)	FAN, WATER PUMP TO ALTERNATOR	-	J911567	0785276
9310 STEIGER	CASE 6-CYL. 505	(96-99)	AIR CONDITIONING	-	907729T1	1472236
		(96-99)	FAN TO ALTERNATOR	-	J911572	0785286
9330 STEIGER	CASE 6-CYL. 505	(96-00)	AIR CONDITIONING	-	1250587C1	0272215
9350 STEIGER	CUMMINS M11	(96-00)	AIR CONDITIONING	-	1250587C1	0272215
		(96-00)	FAN TO ALTERNATOR	-	3034943	0285257
		(96-00)	WATER PUMP TO ALTERNATOR	-	903650T1	2388232
9370 STEIGER	CUMMINS N14	(96-00)	AIR CONDITIONING	-	907190T1	1272212
		(96-00)	ALTERNATOR	-	901375T1	0372223
		(96-00)	WATER PUMP	-	902383T1	2484242
9380 STEIGER	CUMMINS N14	(96-00)	AIR CONDITIONING	-	907190T1	1272212
		(96-00)	ALTERNATOR	-	901375T1	0372223
		(96-00)	WATER PUMP	-	902383T1	2484242
C100	CASE 4-CYL. 244	(97-02)	FAN TO AIR CONDITIONING	-	-	0172208
		(97-02)	FAN TO ALTERNATOR	-	-	0173240
C50	CASE 3-CYL. 165	(98-02)	WATER PUMP	-	218509A1	0372240
C60	CASE 3-CYL. 165	(98-02)	WATER PUMP	-	218509A1	0372240
C70	CASE 4-CYL. 258	(98-02)	AIR CONDITIONING	-	228332A2	0372204
C80	CASE 4-CYL. 244	(98-02)	AIR CONDITIONING	-	228332A2	0372204
C90	CASE 4-CYL. 244	(98-02)	FAN TO AIR CONDITIONING	-	-	0172208
		(98-02)	FAN TO ALTERNATOR	-	-	0173240
CX100	CASE 4-CYL. 244	(98-02)	FAN TO AIR CONDITIONING	-	228332A1	0372204
		(98-02)	FAN TO ALTERNATOR	-	241895A2	0173245
CX50	CASE 3-CYL. 165	(98-02)	AIR CONDITIONING	-	238215A3	0372240
		(98-02)	WATER PUMP	-	218509A1	0372240
CX60	CASE 3-CYL. 165	(98-02)	AIR CONDITIONING	-	238215A3	0372240
		(98-02)	WATER PUMP	-	218509A1	0372240
CX70	CASE 4-CYL. 258	(98-02)	AIR CONDITIONING	-	228332A1	0372204
		(98-02)	WATER PUMP	-	241895A2	0173245
CX80	CASE 4-CYL. 244	(98-02)	AIR CONDITIONING	-	228332A1	0372204
		(98-02)	ALTERNATOR	-	241895A2	0173245
CX90	CASE 4-CYL. 244	(98-02)	FAN TO AIR CONDITIONING	-	228332A1	0372204
		(98-02)	FAN TO ALTERNATOR	-	241895A2	0173245
D25	SHIBAURA 3-CYL. 81	(01-03)	FAN TO ALTERNATOR	-	86517954	1400071
D29	SHIBAURA 3-CYL. 81	(01-03)	FAN TO ALTERNATOR	-	86517954	1400071
D33	SHIBAURA 3-CYL. 91	(01-03)	FAN TO ALTERNATOR	-	86517954	1400071
D35	SHIBAURA 3-CYL. 101	(01-04)	FAN TO ALTERNATOR	-	301525A1	0172206
D40	SHIBAURA 4-CYL. 121	(01-04)	FAN TO ALTERNATOR	-	301525A1	0172206
D45	SHIBAURA 4-CYL. 135	(01-04)	FAN TO ALTERNATOR	-	301525A1	0172206
DX25	SHIBAURA 3-CYL. 81	(02-03)	FAN TO ALTERNATOR	-	86517954	1400071
DX29	SHIBAURA 3-CYL. 81	(02-06)	FAN TO ALTERNATOR	-	86517954	1400071
DX33	SHIBAURA 3-CYL. 91	(02-06)	FAN	-	86517954	1400071
DX35	SHIBAURA 3-CYL. 101	(02-08)	FAN TO ALTERNATOR	-	301525A1	0172206
DX40	SHIBAURA 4-CYL. 121	(02-08)	FAN	-	301525A1	0172206
DX45	SHIBAURA 4-CYL. 135	(02-08)	FAN	-	301525A1	0172206
DX48	SHIBAURA 4-CYL. 135	(04-07)	FAN	-	86517954	1400071
DX55	SHIBAURA 4-CYL. 135	(04-07)	FAN	-	86517954	1400071
FLX4010	CASE 6-CYL. 505	(03-06)	AIR CONDITIONING	-	131403C1	0173210
		(03-06)	FAN TO ALTERNATOR	-	3944840	2885308
JX100U	CASE 4-CYL. 238	(02-04)	ALTERNATOR	-	4796327	0173223
		(02-04)	FAN	-	5140010	0273217

JX1060C	CASE 3-CYL. 179	(04-08)	AIR CONDITIONING	-	5154152	0172201
JX1070C	CASE 3-CYL. 179	(04-08)	AIR CONDITIONING	-	5154152	0172201
JX1075C	CASE 3-CYL. 179	(04)	AIR CONDITIONING	-	5154152	0172201
JX1080U	CASE 4-CYL. 273	(04-08)	AIR CONDITIONING	-	47129821	0172214
		(04-08)	FAN TO ALTERNATOR	-	47131754	0285264
JX1085C	CASE 4-CYL. 274	(06-08)	AIR CONDITIONING	-	47129821	0172214
		(06-08)	FAN TO ALTERNATOR	-	47131754	0285264
JX1090U	CASE 4-CYL. 273	(04-08)	AIR CONDITIONING	-	47129821	0172214
		(04-08)	FAN TO ALTERNATOR	-	47131754	0285264
JX1095C	CASE 4-CYL. 274	(06-08)	AIR CONDITIONING	-	47129821	0172214
		(06-08)	FAN TO ALTERNATOR	-	47131754	0285264
JX1100U	CASE 4-CYL. 273	(04-07)	AIR CONDITIONING	-	47129821	0172214
		(04-07)	FAN TO ALTERNATOR	− VISCOUS FAN	47131754	0285264
				+ VISCOUS FAN	47135840	0385263
JX55	CASE 3-CYL. 165	(02-05)	AIR CONDITIONING	-	5140009	0173214
		(02-05)	ALTERNATOR	-	4796327	0173223
		(02-05)	FAN	-	5094418	0173217
JX65	CASE 3-CYL. 179	(02-06)	AIR CONDITIONING	-	5140009	0173214
		(02-06)	ALTERNATOR	-	4796327	0173223
		(02-06)	FAN	-	5094418	0173217
JX70	CASE 3-CYL. 179	(06-08)	AIR CONDITIONING	-	5140009	0173214
		(06-08)	FAN	-	98473706	0173224
JX75	CASE 4-CYL. 220	(02-05)	AIR CONDITIONING	-	5140009	0173214
				-	10AV1025	0273215
		(02-06)	ALTERNATOR	-	4796327	0173223
		(02-06)	FAN	-	5094418	0173217
JX80U	CASE 4-CYL. 238	(02-04)	AIR CONDITIONING	-	5140009	0173214
		(02-04)	ALTERNATOR	-	4796327	0173223
		(02-04)	FAN	-	5140010	0273217
JX85	CASE 4-CYL. 238	(02-06)	AIR CONDITIONING	-	5140009	0173214
		(02-06)	ALTERNATOR	-	4796327	0173223
		(02-06)	FAN	-	5094418	0173217
JX90U	CASE 4-CYL. 238	(02-04)	ALTERNATOR	-	4796327	0173223
		(02-04)	FAN	-	5140010	0273217
JX95	CASE 4-CYL. 238	(02-08)	AIR CONDITIONING	-	5140009	0173214
		(02-08)	ALTERNATOR	-	4796327	0173223
		(02-08)	FAN	-	5094418	0173217
MAXXUM 120 PRO	CASE 4-CYL. 273	(07-08)	AIR CONDITIONING	-	87802911	0342153
		(07-08)	FAN TO ALTERNATOR	-	4899178	2385277
MX100	CASE 6-CYL. 359	(96-02)	FAN TO AIR CONDITIONING	-	A184652	0172211
		(96-02)	FAN, WATER PUMP TO ALTERNATOR	-	J911558	0285271
MX100C	CASE 4-CYL. 244	(98-01)	FAN TO AIR CONDITIONING	-	-	0172208
		(98-01)	FAN TO ALTERNATOR	-	241895A2	0173245
MX110	CASE 6-CYL. 359	(96-02)	FAN TO AIR CONDITIONING	-	A184652	0172211
		(96-02)	FAN, WATER PUMP TO ALTERNATOR	-	J911558	0285271
				-	J911562	0785269
MX120	CASE 6-CYL. 359	(96-02)	FAN TO AIR CONDITIONING	-	A184652	0172211
		(96-02)	FAN, WATER PUMP TO ALTERNATOR	-	J911558	0285271
				-	J911562	0785269
MX135	CASE 6-CYL. 359	(96-02)	FAN TO AIR CONDITIONING	-	A184652	0172211
		(96-02)	FAN, WATER PUMP TO ALTERNATOR	-	J911558	0285271
				-	J911562	0785269

MX150	CASE 6-CYL. 359	(97-01)	FAN TO AIR CONDITIONING	-	84766C1	0272210
		(97-01)	FAN, WATER PUMP TO ALTERNATOR	-	J911558	0285271
				-	J911562	0785269
MX170	CASE 6-CYL. 359	(97-01)	FAN TO AIR CONDITIONING	-	84766C1	0272210
		(97-01)	FAN, WATER PUMP TO ALTERNATOR	-	J911558	0285271
				-	J911562	0785269
MX180	CASE 6-CYL. 505	(99-02)	AIR BRAKE COMPRESSOR	-	A189040	0372223
		(98)	COMPRESSOR	-	A189040	0372223
MX200	CASE 6-CYL. 505	(99-02)	AIR BRAKE COMPRESSOR	-	A189040	0372223
		(98)	COMPRESSOR	-	A189040	0372223
MX210	CASE 6-CYL. 505	(01-06)	FAN, WATER PUMP TO ALTERNATOR	-	87402830	0285316
MX220	CASE 6-CYL. 505	(00-02)	AIR BRAKE COMPRESSOR	-	A189040	0372223
		(98-99)	COMPRESSOR	-	A189040	0372223
MX230	CASE 6-CYL. 505	(01-06)	FAN, WATER PUMP TO ALTERNATOR	-	87402830	0285316
MX240	CASE 6-CYL. 505	(98-02)	FAN TO AIR CONDITIONING	-	A189040	0372223
		(98-02)	FAN TO ALTERNATOR	-	243373A1	2685289
MX255	CASE 6-CYL. 505	(01-06)	FAN, WATER PUMP TO ALTERNATOR	-	87402831	0385315
MX270	CASE 6-CYL. 505	(98-02)	FAN TO AIR CONDITIONING	-	A189040	0372223
		(98-02)	FAN TO ALTERNATOR	-	243373A1	2685289
MX285	CASE 6-CYL. 505	(01-06)	FAN, WATER PUMP TO ALTERNATOR	-	87402831	0385315
MX80C	CASE 4-CYL. 244	(98-02)	FAN TO AIR CONDITIONING	-	-	0172208
		(98-02)	FAN TO ALTERNATOR	-	241895A2	0173245
MX90C	CASE 4-CYL. 244	(98-02)	FAN TO AIR CONDITIONING	-	-	0172208
		(98-02)	FAN TO ALTERNATOR	-	241895A2	0173245
MXM120	CASE 6-CYL. 456	(02-07)	FAN	-	87802822	0385312
MXM130	CASE 6-CYL. 456	(02-07)	FAN	-	87802822	0385312
MXM140	CASE 6-CYL. 456	(02-07)	FAN	-	87802822	0385312
MXM155	CASE 6-CYL. 456	(02-07)	FAN	-	87802822	0385312
MXM175	CASE 6-CYL. 456	(02-07)	FAN	-	87802822	0385312
MXM190	CASE 6-CYL. 456	(02-07)	FAN	-	87802822	0385312
MXU100	CASE 4-CYL. 273	(04-06)	AIR CONDITIONING	-	87802911	0342153
		(04-06)	FAN	-	-	2385277
		(04-06)	FAN TO ALTERNATOR	-	4899178	2385277
MXU110	CASE 4-CYL. 273	(04-06)	AIR CONDITIONING	-	87802911	0342153
		(04-06)	WATER PUMP	-	4899178	2385277
MXU125	CASE 6-CYL. 410	(04-06)	AIR CONDITIONING	-	87802911	0342153
		(04-06)	FAN TO ALTERNATOR	-	4899178	2385277
MXU135	CASE 6-CYL. 410	(04-06)	AIR CONDITIONING	-	87802911	0342153
		(04-06)	WATER PUMP	-	4899178	2385277
STX275	CASE 6-CYL. 505	(00-06)	WATER PUMP TO ALTERNATOR	→| SERIAL No. JEE0099500	3911567	0785288
		(00-06)	HUB TO AIR CONDITIONING	-	A189040	0372223
STX280	CASE 6-CYL. 505	(06-07)	AIR CONDITIONING	-	A189040	0372223
		(06-07)	ALTERNATOR TO AIR CONDITIONING	-	87437226	0284278
STX325	CASE 6-CYL. 543	(00-06)	AIR CONDITIONING	-	A189040	0372223
		(00-06)	WATER PUMP TO ALTERNATOR	-	3911567	0785288
STX330	CASE 6-CYL. 543	(06-07)	AIR CONDITIONING	-	A189040	0372223
		(06-07)	ALTERNATOR	-	87437226	0284278
STX375	CUMMINS 6-CYL. 912	(00-06)	WATER PUMP	-	325289A1	0342155
		(00-06)	ALTERNATOR TO AIR CONDITIONING	-	87437226	0284278
STX380	CASE 6-CYL. 787	(06-07)	FAN TO ALTERNATOR	-	504078066	0285348
		(06-07)	FAN, ALTERNATOR TO AIR CONDITIONING	-	87437226	0284278

STX425	CUMMINS 6-CYL. 912	(01-06)	WATER PUMP	-	325289A1	0342155
		(01-06)	ALTERNATOR TO AIR CONDITIONING	-	87437226	0284278
STX430	CASE 6-CYL. 787	(06-07)	WATER PUMP	-	504078066	0285348
		(06-07)	ALTERNATOR TO AIR CONDITIONING	-	87437226	0284278
STX440	CUMMINS 6-CYL. 912	(00-02)	ALTERNATOR	-	325290A1	0284278
		(00-02)	WATER PUMP	-	325289A1	0342155
STX450	CUMMINS 6-CYL. 912	(01-06)	WATER PUMP	-	325289A1	0342155
		(01-06)	ALTERNATOR TO AIR CONDITIONING	-	87437226	0284278
STX480	CUMMINS 6-CYL. 915	(06-07)	WATER PUMP	-	325289A1	0342155
		(06-07)	ALTERNATOR TO AIR CONDITIONING	-	87437226	0284278
STX500	CUMMINS 6-CYL. 912	(04-06)	WATER PUMP	-	325289A1	0342155
		(04-06)	ALTERNATOR TO AIR CONDITIONING	-	87437226	0284278
STX530	CUMMINS 6-CYL. 915	(06-07)	WATER PUMP	-	325289A1	0342155
		(06-07)	ALTERNATOR TO AIR CONDITIONING	-	87437226	0284278
CATERPILLAR						
571E PS (64A)	CATERPILLAR D333	(61-72)	ALTERNATOR	-	2S9778	0272247
		(61-72)	FAN	-	5H7371	2902164
		(61-72)	GENERATOR	SERIAL No. 64A152 → 64A221	3S6272	1472236
				→ SERIAL No. 64A222	2S5218	0372245
571G (16W)	CATERPILLAR D3306	(76-85)	FAN TO ALTERNATOR	-	-	2902164
572E (65A)	CATERPILLAR D399T	(61-72)	ALTERNATOR	-	2S9778	0272247
		(61-72)	FAN	-	5H7371	2902164
		(61-72)	GENERATOR	SERIAL No. 65A151 → 65A313	3S6272	1472236
				→ SERIAL No. 65A314	2S5218	0372245
572F PS (96N)	CATERPILLAR D333T	(70-74)	ALTERNATOR	-	5M8135	0172235
583H (61A)	CATERPILLAR D343T	(60-74)	ALTERNATOR	-	8M8335	0372257
		(60-74)	GENERATOR	SERIAL No. 61A1 → 61A96	3S3961	0372244
				SERIAL No. 61A121 → 61A192	2S5218	0372245
				SERIAL No. 61A193 → 61A679	8M8335	0372257
				SERIAL No. 61A97 → 61A120	2S2743	0372240
594 (62H)	CATERPILLAR D353TA	(65-75)	ALTERNATOR	-	5S5249	0372260
		(65-75)	FAN	-	2P8624	2902164
CHALLENGER 45	CATERPILLAR 3116	(94-01)	AIR CONDITIONING	-	2P4191	0172235
		(94-01)	FAN TO ALTERNATOR	-	-	0399322
		(94-01)	WATER PUMP	-	-	0172201
CHALLENGER 65	CATERPILLAR 3306	(86-90)	AIR CONDITIONING	-	9N1329	0172217
		(86-90)	FAN TO ALTERNATOR	-	8M0959	0402153
CHALLENGER 65E	CATERPILLAR 3176	(97-01)	FAN TO AIR CONDITIONING	-	-	0372240
		(97-01)	FAN TO ALTERNATOR	-	8M0959	0402153
CHALLENGER 75C	CATERPILLAR 3176	(92-96)	FAN TO AIR CONDITIONING	-	-	0372242
		(92-96)	FAN TO ALTERNATOR	-	8M0959	0402153
CHALLENGER 85C	CATERPILLAR 3176	(93-96)	FAN TO AIR CONDITIONING	-	-	0372242
		(93-96)	FAN TO ALTERNATOR	-	8M0959	0402153
CHALLENGER 85E	CATERPILLAR 3196	(97-01)	FAN TO AIR CONDITIONING	-	-	0372240
		(97-01)	FAN TO ALTERNATOR	-	8M0959	0402153
D2 (4U)	CATERPILLAR D311	(48-57)	GOVERNOR	-	5B7168	0272210
D3B (27Y)	CATERPILLAR 3204	(79-88)	FAN TO ALTERNATOR	-	-	0172253

D3C	CATERPILLAR 3204	(88-90)	FAN	-	-	0372223
		(88-90)	WATER PUMP TO ALTERNATOR	-	-	0372245
D4 (6U)	CATERPILLAR 4-CYL. 350	(47-59)	ALTERNATOR TO GOVERNOR	-	-	0272210
D4 (7J)	CATERPILLAR D4400	(39-44)	ALTERNATOR	-	5B7168	0272210
D4 (7U)	CATERPILLAR 4-CYL. 350	(47-59)	ALTERNATOR TO GOVERNOR	-	-	0272210
D4D (22C)	CATERPILLAR 3304	(67-68)	GENERATOR	-	4M6291	0272215
		(67-68)	WATER PUMP	-	5S1817	0372258
	CATERPILLAR D315	(67-68)	GENERATOR	-	4M6291	0272215
		(67-68)	WATER PUMP	-	5S1817	0372258
	CATERPILLAR D330	(67-68)	GENERATOR	-	4M6291	0272215
		(67-68)	WATER PUMP	-	5S1817	0372258
D4D (78A)	CATERPILLAR 3304	(63-68)	FAN	-	5S1817	0372258
		(63-68)	GENERATOR	-	-	0272215
D4D (82J)	CATERPILLAR 3304	(68-77)	AIR CONDITIONING	-	2P5619	0372272
				-	2P6818	0172225
D4D (83J)	CATERPILLAR 3304	(68-77)	AIR CONDITIONING	-	2P5619	0372272
				-	2P6820	0172221
D4D SA (20J)	CATERPILLAR 3304	(66-68)	GENERATOR	-	4M6291	0272215
		(66-68)	WATER PUMP	-	8M8335	0372257
D4D SA (84J)	CATERPILLAR 3304	(68-77)	AIR CONDITIONING	-	2P5619	0372272
				-	2P6818	0172225
				-	2P6820	0172221
D4E (70X)	CATERPILLAR 3304	(78-87)	AIR CONDITIONING	-	-	0372232
D4H (8PB)	CATERPILLAR 3204	(85-95)	FAN TO ALTERNATOR	-	5S3244	0372262
		(85-95)	WATER PUMP	-	-	0422134
D5B LGP (46X)	CATERPILLAR 3306	(77-87)	AIR CONDITIONING	-	-	0172225
D6 (8U)	CATERPILLAR D318	(47-59)	GOVERNOR	SERIAL No. 9U1 → 9U29764	4B2544	0172217
D6 (9U)	CATERPILLAR D318	(47-59)	GOVERNOR	SERIAL No. 9U1 → 9U29764	4B2544	0172217
D6C (10K)	CATERPILLAR D333	(67-76)	AIR CONDITIONING	-	2P4191	0172235
		(67-76)	FAN TO ALTERNATOR	-	7B344	0202139
D6C (71A)	CATERPILLAR D333	(63-67)	CLUTCH	-	8M8335	0372257
D6C (73A)	0285316	(64-68)	CLUTCH	-	8M8335	0372257
D6C (74A)	CATERPILLAR D333	(63-67)	CLUTCH	-	8M8335	0372257
D6C (76A)	CATERPILLAR D333	(63-67)	CLUTCH	-	8M8335	0372257
D6C (99J)	CATERPILLAR D333	(67-77)	AIR CONDITIONING	-	2P4191	0172235
D6C LGP (69U)	CATERPILLAR 3306	(72-77)	AIR CONDITIONING	-	4N6013	1472238
D6D SA (5X)	CATERPILLAR 3306	(76-90)	AIR CONDITIONING	-	-	1472238
D6H (3ZF)	CATERPILLAR 3306	(87-90)	FAN TO ALTERNATOR	-	-	2902164
D7E (47A)	CATERPILLAR D339	(61-69)	ALTERNATOR	-	2S9506	0122155
				-	2S9778	0272247
		(61-69)	GENERATOR	-	2S5218	0372245
				-	3S6272	1472236
				-	5M8135	0172235
				-	5M8137	0372231
D7E (48A)	CATERPILLAR D339	(61-70)	ALTERNATOR	-	2S9506	0122155
				-	2S9778	0272247
		(61-70)	FAN	-	5H7371	2902164
		(61-70)	GENERATOR	SERIAL No. 48A6393 → 48A9314	3S6272	1472236
				→ SERIAL No. 48A9315	2S5218	0372245
D7E (93N)	CATERPILLAR D339	(69-74)	AIR CONDITIONING	-	1P3085	0422134

D7F (93N)	CATERPILLAR 3306	(69-75)	AIR CONDITIONING	-	1P3085	0422134
D7F (94N)	CATERPILLAR 3306	(69-75)	AIR CONDITIONING	-	1P3085	0422134
D7G (92V)	CATERPILLAR 3306	(75-88)	FAN TO ALTERNATOR	-	5H7371	2902164
D7H (79Z)	CATERPILLAR 3306	(86-95)	AIR CONDITIONING	-	-	0272218
D8 (14A)	CATERPILLAR D13000	(54-58)	FAN	-	-	0202139
D8E (14A)	CATERPILLAR D342	(55-58)	FAN	-	-	0202139
D8G (15A)	CATERPILLAR D342	(55-59)	FAN	-	-	0202139
D8H (22A)	CATERPILLAR D342	(59-69)	ALTERNATOR	-	2S9778	0272247
				-	8M8335	0372257
				-	8M8336	0172253
		(59-69)	GENERATOR	-	2S9506	0122155
				-	8M8335	0372257
D8H (46A)	CATERPILLAR D342	(59-74)	AIR CONDITIONING	SERIAL No. 46A12085 → 46A28136	-	1472251
				→ SERIAL No. 46A12137	1P4334	0422134
		(59-74)	ALTERNATOR	-	2S9778	0272247
				-	8M8335	0372257
				-	8M8336	0172253
		(59-74)	GENERATOR	SERIAL No. 46A1 → 46A8081	3S3961	0372244
				SERIAL No. 46A10726 → 46A12671	2S5218	0372245
				→ SERIAL No. 46A12672	8M8335	0372257
				SERIAL No. 46A8082 → 46A10725	2S2743	0372240
D8H (68A)	CATERPILLAR D342	(60-74)	ALTERNATOR	-	8M8335	0372257
				-	8M8336	0172253
		(60-74)	GENERATOR	SERIAL No. 68A1003 → 68A1187	2S5218	0372245
				SERIAL No. 68A1188 → 68A3846	8M8335	0372257
D8K (77V)	CATERPILLAR D342	(74-84)	ALTERNATOR	-	-	1401127
		(74-84)	FAN	-	6N4548	0301141
D8L	CATERPILLAR 3408	(82-92)	ALTERNATOR	-	3S9652	1472264
		(82-92)	FAN	-	6N6650	0301141
D8L (53Y)	CATERPILLAR 3408	(81-87)	ALTERNATOR	-	-	1401137
D9G (66A)	CATERPILLAR D353TA	(61-74)	AIR BRAKE COMPRESSOR	-	8M8335	0372257
		(61-74)	GENERATOR	SERIAL No. 66A1209 → 66A3846	8M8335	0372257
D9G (90J)	CATERPILLAR D353TA	(69-75)	FAN	→ SERIAL No. 90J106	5H7371	2902164
D9H (90V)	CATERPILLAR D353	(74-81)	FAN TO AIR CONDITIONING	-	2P6532	1472264
		(74-81)	FAN TO WATER PUMP	-	5H7371	2902164
CBT						
8060	MERCEDES-BENZ 6-CYL. 346	(87-93)	ALTERNATOR	-	-	0372245
		(87-93)	HYDRAULIC PUMP	-	-	0372203
8240	PERKINS 4-CYL. 248	(87-91)	ALTERNATOR	-	-	0372242
		(87-91)	HYDRAULIC PUMP	-	-	0372203
8260	PERKINS 6-CYL. 354	(87-91)	ALTERNATOR	-	-	0272247
CHALLENGER						
MT865B	CATERPILLAR C18	(05-06)	AIR CONDITIONING	-	500685D1	0185340
		(05-06)	FAN	-	197-6291	1490281
COCKSHUTT						
40	BUDA 6-CYL. 230	(49-58)	POWER STEERING	-	Z527	2502096
50	BUDA 6-CYL. 273	(53-58)	POWER STEERING	-	Z527	2502096

540	CONTINENTAL 4-CYL. 162	(58-62)	POWER STEERING	-	Z928	1472238
		(58-62)	FAN TO GENERATOR	-	Z555	0172225
550	HERCULES 4-CYL. 198	(58-62)	POWER STEERING	-	Z880	1472236
		(58-62)	FAN TO GENERATOR	-	Z555	0172225
560	PERKINS 4-CYL. 269	(58-62)	POWER STEERING	-	Z881	0372232
				-	Z928	1472238
		(58-62)	FAN TO GENERATOR	-	Z883	0372231
		(58-60)	FAN TO GENERATOR	-	Z555	0172225
35 DELUXE	HERCULES 4-CYL. 198	(56-58)	POWER STEERING	-	Z577	0173235
		(56-58)	FAN TO GENERATOR	-	Z555	0172225
GOLDEN ARROW	HERCULES 4-CYL. 198	(57)	POWER STEERING	-	Z671	0173240
		(57)	FAN TO GENERATOR	-	Z555	0172225
DAVID BROWN						
770	DAVID BROWN 3-CYL. 146	(65-70)	FAN TO GENERATOR	-	912196	0173220
780	DAVID BROWN 3-CYL. 146	(67-71)	FAN TO GENERATOR	-	912196	0173220
850	DAVID BROWN 4-CYL. 154	(60-65)	FAN TO GENERATOR	-	A903050	0373225
880	DAVID BROWN 3-CYL. 154	(61-71)	POWER STEERING	-	913631	0173207
		(61-71)	FAN TO GENERATOR	-	912196	0173220
885	DAVID BROWN 3-CYL. 146	(71-80)	FAN TO ALTERNATOR	-	912196	0173220
		(71-80)	FAN TO GENERATOR	-	901111	0173224
	DAVID BROWN 3-CYL. 164	(71-80)	FAN TO ALTERNATOR	-	942053R	0273217
		(71-80)	POWER STEERING	-	913637R	0373178
		(71-80)	FAN TO GENERATOR	-	912196	0173220
900	DAVID BROWN 4-CYL. 164	(56-58)	FAN TO GENERATOR	-	A903050	0373225
990	DAVID BROWN 4-CYL. 185	(61-80)	FAN TO ALTERNATOR	-	903050	0373225
		(61-80)	FAN TO GENERATOR	SERIAL No. 482001 → 800000	901111	0173224
				→ SERIAL No. 800001	68073	0373225
	DAVID BROWN 4-CYL. 195	(61-80)	FAN TO ALTERNATOR	-	903050	0373225
		(61-80)	FAN TO GENERATOR	SERIAL No. 482001 → 800000	901111	0173224
				→ SERIAL No. 800001	68073	0373225
995	DAVID BROWN 4-CYL. 219	(71-80)	FAN TO ALTERNATOR	-	903050	0373225
		(71-80)	FAN TO GENERATOR	SERIAL No. 482001 → 800000	901111	0173224
				→ SERIAL No. 800001	68073	0373225
996	DAVID BROWN 4-CYL. 219	(72-76)	FAN TO ALTERNATOR	-	903050	0373225
		(72-76)	FAN TO GENERATOR	SERIAL No. 482001 → 800000	901111	0173224
				→ SERIAL No. 800001	68073	0373225
1210	DAVID BROWN 4-CYL. 219	(71-80)	FAN TO ALTERNATOR	-	68073	0373225
1212	DAVID BROWN 4-CYL. 219	(71-75)	FAN TO ALTERNATOR	-	68073	0373225
3800	DAVID BROWN 3-CYL. 146	(68-72)	FAN TO GENERATOR	-	901111	0173224
4600	DAVID BROWN 3-CYL. 164	(69-72)	FAN TO GENERATOR	-	912196	0173220
DEUTZ-ALLIS						
5215	HINOMOTO 3-CYL. 61	(86-89)	FAN TO ALTERNATOR	-	A38	0272210
5220	TOYOSHA 3-CYL. 87	(86-90)	FAN TO ALTERNATOR	-	-	0172217
5230	TOYOSHA 3-CYL. 92	(86-91)	FAN TO ALTERNATOR	-	-	0172217
6070	ALLIS-CHALMERS 4-CYL. 200	(85-86)	AIR CONDITIONING	-	562203	0172219
		(85-86)	FAN TO ALTERNATOR	-	263408	1472238
6240	DEUTZ 3-CYL. 173	(85-92)	BLOWER TO ALTERNATOR	-	1175765	0173253
6250	DEUTZ 3-CYL. 173	(85-91)	BLOWER TO ALTERNATOR	-	1175765	0173253
6260	DEUTZ 3-CYL. 187	(85-91)	BLOWER TO ALTERNATOR	-	1175765	0173253

6265	DEUTZ 4-CYL. 230	(85-91)	BLOWER TO ALTERNATOR	-	1175765	0173253
6275	DEUTZ 4-CYL. 249	(85-91)	BLOWER TO ALTERNATOR	-	1175765	0173253
7085	DEUTZ 4-CYL. 249	(85-91)	AIR CONDITIONING	-	4342249	0372244
		(85-91)	BLOWER TO ALTERNATOR	-	2235262	0173249
				-	2235265	0173257
7120	DEUTZ 6-CYL. 374	(86-91)	BLOWER	-	-	0173240
7145	DEUTZ 6-CYL. 374	(86-91)	ALTERNATOR	-	2235180	0173223
		(86-91)	BLOWER	-	2234343	0173240
8010	ALLIS-CHALMERS 6-CYL. 301	(86-89)	AIR CONDITIONING	-	260149	0372280
		(86-89)	FAN TO ALTERNATOR	-	254351	0372242
8070	ALLIS-CHALMERS 6-CYL. 426	(86-89)	FAN TO ALTERNATOR	-	273193	1401129
9130	DEUTZ 6-CYL. 374	(89-92)	AIR CONDITIONING	-	-	0272210
		(89-92)	ALTERNATOR	-	-	1472227
9150	DEUTZ 6-CYL. 374	(89-92)	AIR CONDITIONING	-	303535835	0172208
		(89-92)	ALTERNATOR	-	303526658	1472227
		(89-92)	BLOWER TO IDLER	-	2235177	1573242
9170	DEUTZ 6-CYL. 584	(89-92)	AIR CONDITIONING	-	72160695	0173205
				-	303527484	0372204
		(89-92)	ALTERNATOR	-	303526682	0373201
9190	DEUTZ 6-CYL. 584	(89-92)	AIR CONDITIONING	-	72160695	0173205
				-	303527484	0372204
		(89-92)	ALTERNATOR	-	303526682	0373201
6260F	DEUTZ 3-CYL. 187	(87-91)	BLOWER TO ALTERNATOR	-	2235256	0173247
6275F	DEUTZ 4-CYL. 249	(88-91)	BLOWER TO ALTERNATOR	-	2235256	0173247
6275L	DEUTZ 4-CYL. 249	(88-91)	BLOWER TO ALTERNATOR	-	2235256	0173247
DEUTZ-FAHR						
D30-06	DEUTZ 2-CYL. 115	(69-79)	BLOWER TO GENERATOR	-	-	0373225
D40-06	DEUTZ 3-CYL. 173	(69-78)	BLOWER TO ALTERNATOR	-	-	0173249
D45-06	DEUTZ 3-CYL. 173	(72-80)	BLOWER TO ALTERNATOR	-	-	0173249
D62-06	DEUTZ 4-CYL. 230	(74-81)	BLOWER TO ALTERNATOR	-	-	0173249
D68-06	DEUTZ 4-CYL. 230	(74-80)	BLOWER TO ALTERNATOR	-	-	0173249
D80-06	DEUTZ 6-CYL. 345	(72-79)	BLOWER TO ALTERNATOR	-	-	0173253
DX110	DEUTZ 6-CYL. 345	(79-80)	AIR CONDITIONING	-	-	0372203
		(80)	BLOWER TO ALTERNATOR	-	-	0173253
DX120	DEUTZ 6-CYL. 374	(80-84)	AIR CONDITIONING	-	-	0372203
		(80-84)	BLOWER TO ALTERNATOR	-	-	1472251
DX130	DEUTZ 6-CYL. 374	(80-84)	AIR CONDITIONING	-	-	0372203
		(80-84)	BLOWER TO ALTERNATOR	-	-	1472251
DX140	DEUTZ 6-CYL. 374	(79-80)	ALTERNATOR	-	-	0373225
DX160	DEUTZ 6-CYL. 374	(79-84)	AIR CONDITIONING	-	-	0372203
		(79-84)	BLOWER TO ALTERNATOR	-	-	1472251
DX90	DEUTZ 5-CYL. 287	(79-84)	AIR CONDITIONING	-	-	0372203
		(79-84)	ALTERNATOR	-	33566	0173230
		(79-84)	BLOWER	-	2232958	0173240
		(79-84)	HYDRAULIC PUMP	-	33567	1472238
		(79-84)	BLOWER TO ALTERNATOR	-	-	0173253
FERGUSON						
40	CONTINENTAL 4-CYL. 134	(56)	FAN TO GENERATOR	-	181523M1	0272218
F40	CONTINENTAL 4-CYL. 134	(56-57)	FAN TO GENERATOR	-	509572M1	0172217
T035	CONTINENTAL 4-CYL. 134	(54-57)	FAN TO GENERATOR	-	509572M1	0172217
FERRARI						
86	LAMBORGHINI 3-CYL. 151	(78-89)	BLOWER	-	-	0173214

95	LAMBORGHINI 2-CYL. 81	(81-89)	BLOWER	-	-	0173197
1300	LAMBORGHINI 2-CYL. 81	(87-89)	BLOWER	-	-	0173197
94L	LAMBORGHINI 2-CYL. 81	(81-82)	BLOWER	-	-	0173197
FIAT						
F110	FIAT 6-CYL. 358	(90-95)	FAN TO ALTERNATOR TO IDLER	-	-	0173225
		(90-95)	FAN TO IDLER	-	-	0373221
F130	FIAT 6-CYL. 358	(90-95)	FAN TO ALTERNATOR TO IDLER	-	-	0173225
		(90-95)	FAN TO IDLER	-	-	0373221
FORD						
501	FORD 4-CYL. 134	(58-62)	POWER STEERING	→I SERIAL No. 89929	310050	0172225
				I→ SERIAL No. 89930	EAF8577A	0272215
		(58-62)	FAN TO GENERATOR	-	EAF8577A	0272215
	FORD 4-CYL. 144	(58-62)	POWER STEERING	→I SERIAL No. 89929	310050	0172225
				I→ SERIAL No. 89930	EAF8577A	0272215
		(58-62)	FAN TO GENERATOR	-	EAF8577A	0272215
611	FORD 4-CYL. 134	(57-62)	POWER STEERING	→I SERIAL No. 89929	310050	0172225
				I→ SERIAL No. 89930	EAF8577A	0272215
		(57-62)	FAN TO GENERATOR	-	EAF8577A	0272215
	FORD 4-CYL. 134 LPG	(57-62)	POWER STEERING	→I SERIAL No. 89929	310050	0172225
				I→ SERIAL No. 89930	EAF8577A	0272215
		(57-62)	FAN TO GENERATOR	-	EAF8577A	0272215
	FORD 4-CYL. 144	(57-62)	POWER STEERING	→I SERIAL No. 89929	310050	0172225
				I→ SERIAL No. 89930	EAF8577A	0272215
		(57-62)	FAN TO GENERATOR	-	EAF8577A	0272215
620	FORD 4-CYL. 134	(54-57)	POWER STEERING	→I SERIAL No. 89929	310050	0172225
				I→ SERIAL No. 89930	EAF8577A	0272215
		(54-57)	FAN TO GENERATOR	-	EAF8577A	0272215
	FORD 4-CYL. 134 LPG	(54-57)	POWER STEERING	→I SERIAL No. 89929	310050	0172225
				I→ SERIAL No. 89930	EAF8577A	0272215
		(54-57)	FAN TO GENERATOR	-	EAF8577A	0272215
621	FORD 4-CYL. 134	(59-62)	POWER STEERING	→I SERIAL No. 89929	310050	0172225
				I→ SERIAL No. 89930	EAF8577A	0272215
		(59-62)	FAN TO GENERATOR	-	EAF8577A	0272215
	FORD 4-CYL. 134 LPG	(59-62)	POWER STEERING	→I SERIAL No. 89929	310050	0172225
				I→ SERIAL No. 89930	EAF8577A	0272215
		(59-62)	FAN TO GENERATOR	-	EAF8577A	0272215
	FORD 4-CYL. 144	(59-62)	POWER STEERING	→I SERIAL No. 89929	310050	0172225
				I→ SERIAL No. 89930	EAF8577A	0272215
		(59-62)	FAN TO GENERATOR	-	EAF8577A	0272215
630	FORD 4-CYL. 134	(54-57)	POWER STEERING	→I SERIAL No. 89929	310050	0172225
				I→ SERIAL No. 89930	EAF8577A	0272215
		(54-57)	FAN TO GENERATOR	-	EAF8577A	0272215
	FORD 4-CYL. 134 LPG	(54-57)	POWER STEERING	→I SERIAL No. 89929	310050	0172225
				I→ SERIAL No. 89930	EAF8577A	0272215
		(54-57)	FAN TO GENERATOR	-	EAF8577A	0272215

631	FORD 4-CYL. 134	(59-62)	POWER STEERING	→I SERIAL No. 89929	310050	0172225
				I→ SERIAL No. 89930	EAF8577A	0272215
		(59-62)	FAN TO GENERATOR	-	EAF8577A	0272215
	FORD 4-CYL. 134 LPG	(59-62)	POWER STEERING	→I SERIAL No. 89929	310050	0172225
				I→ SERIAL No. 89930	EAF8577A	0272215
		(59-62)	FAN TO GENERATOR	-	EAF8577A	0272215
	FORD 4-CYL. 144	(59-62)	POWER STEERING	→I SERIAL No. 89929	310050	0172225
				I→ SERIAL No. 89930	EAF8577A	0272215
		(59-62)	FAN TO GENERATOR	-	EAF8577A	0272215
640	FORD 4-CYL. 134	(54-57)	POWER STEERING	→I SERIAL No. 89929	310050	0172225
				I→ SERIAL No. 89930	EAF8577A	0272215
		(54-57)	FAN TO GENERATOR	-	EAF8577A	0272215
	FORD 4-CYL. 134 LPG	(54-57)	POWER STEERING	→I SERIAL No. 89929	310050	0172225
				I→ SERIAL No. 89930	EAF8577A	0272215
		(54-57)	FAN TO GENERATOR	-	EAF8577A	0272215
641	FORD 4-CYL. 134	(59-62)	POWER STEERING	→I SERIAL No. 89929	310050	0172225
				I→ SERIAL No. 89930	EAF8577A	0272215
		(59-62)	FAN TO GENERATOR	-	EAF8577A	0272215
	FORD 4-CYL. 134 LPG	(59-62)	POWER STEERING	→I SERIAL No. 89929	310050	0172225
				I→ SERIAL No. 89930	EAF8577A	0272215
		(59-62)	FAN TO GENERATOR	-	EAF8577A	0272215
	FORD 4-CYL. 144	(59-62)	POWER STEERING	→I SERIAL No. 89929	310050	0172225
				I→ SERIAL No. 89930	EAF8577A	0272215
		(59-62)	FAN TO GENERATOR	-	EAF8577A	0272215
650	FORD 4-CYL. 134	(54-57)	FAN TO ALTERNATOR	-	D3NN10C318D	0372242
		(54-57)	POWER STEERING	→I SERIAL No. 89929	310050	0172225
				I→ SERIAL No. 89930	EAF8577A	0272215
		(54-57)	FAN TO GENERATOR	-	EAF8577A	0272215
	FORD 4-CYL. 134 LPG	(54-57)	FAN TO ALTERNATOR	-	D3NN10C318D	0372242
		(54-57)	POWER STEERING	→I SERIAL No. 89929	310050	0172225
				I→ SERIAL No. 89930	EAF8577A	0272215
		(54-57)	FAN TO GENERATOR	-	EAF8577A	0272215
651	FORD 4-CYL. 134	(57-62)	POWER STEERING	→I SERIAL No. 89929	310050	0172225
				I→ SERIAL No. 89930	EAF8577A	0272215
		(57-62)	FAN TO GENERATOR	-	EAF8577A	0272215
	FORD 4-CYL. 134 LPG	(57-62)	POWER STEERING	→I SERIAL No. 89929	310050	0172225
				I→ SERIAL No. 89930	EAF8577A	0272215
		(57-62)	FAN TO GENERATOR	-	EAF8577A	0272215
	FORD 4-CYL. 144	(57-62)	POWER STEERING	→I SERIAL No. 89929	310050	0172225
				I→ SERIAL No. 89930	EAF8577A	0272215
		(57-62)	FAN TO GENERATOR	-	EAF8577A	0272215
660	FORD 4-CYL. 134	(54-57)	POWER STEERING	→I SERIAL No. 89929	310050	0172225
				I→ SERIAL No. 89930	EAF8577A	0272215
		(54-57)	FAN TO GENERATOR	-	EAF8577A	0272215
	FORD 4-CYL. 134 LPG	(54-57)	POWER STEERING	→I SERIAL No. 89929	310050	0172225
				I→ SERIAL No. 89930	EAF8577A	0272215
		(54-57)	FAN TO GENERATOR	-	EAF8577A	0272215

661	FORD 4-CYL. 134	(57-62)	POWER STEERING	→I SERIAL No. 89929	310050	0172225
				I→ SERIAL No. 89930	EAF8577A	0272215
		(57-62)	FAN TO GENERATOR	-	EAF8577A	0272215
	FORD 4-CYL. 134 LPG	(57-62)	POWER STEERING	→I SERIAL No. 89929	310050	0172225
				I→ SERIAL No. 89930	EAF8577A	0272215
		(57-62)	FAN TO GENERATOR	-	EAF8577A	0272215
	FORD 4-CYL. 144	(57-62)	POWER STEERING	→I SERIAL No. 89929	310050	0172225
				I→ SERIAL No. 89930	EAF8577A	0272215
		(57-62)	FAN TO GENERATOR	-	EAF8577A	0272215
671	FORD 4-CYL. 134	(57-62)	POWER STEERING	→I SERIAL No. 89929	310050	0172225
				I→ SERIAL No. 89930	EAF8577A	0272215
		(57-62)	FAN TO GENERATOR	-	EAF8577A	0272215
	FORD 4-CYL. 134 LPG	(57-62)	POWER STEERING	→I SERIAL No. 89929	310050	0172225
				I→ SERIAL No. 89930	EAF8577A	0272215
		(57-62)	FAN TO GENERATOR	-	EAF8577A	0272215
	FORD 4-CYL. 144	(57-62)	POWER STEERING	→I SERIAL No. 89929	310050	0172225
				I→ SERIAL No. 89930	EAF8577A	0272215
		(57-62)	FAN TO GENERATOR	-	EAF8577A	0272215
681	FORD 4-CYL. 134	(57-62)	POWER STEERING	→I SERIAL No. 89929	310050	0172225
				I→ SERIAL No. 89930	EAF8577A	0272215
		(57-62)	FAN TO GENERATOR	-	EAF8577A	0272215
	FORD 4-CYL. 134 LPG	(57-62)	POWER STEERING	→I SERIAL No. 89929	310050	0172225
				I→ SERIAL No. 89930	EAF8577A	0272215
		(57-62)	FAN TO GENERATOR	-	EAF8577A	0272215
	FORD 4-CYL. 144	(57-62)	POWER STEERING	→I SERIAL No. 89929	310050	0172225
				I→ SERIAL No. 89930	EAF8577A	0272215
		(57-62)	FAN TO GENERATOR	-	EAF8577A	0272215
740	FORD 4-CYL. 134	(54-57)	POWER STEERING	→I SERIAL No. 89929	310050	0172225
				I→ SERIAL No. 89930	EAF8577A	0272215
		(54-57)	FAN TO GENERATOR	-	EAF8577A	0272215
	FORD 4-CYL. 134 LPG	(54-57)	POWER STEERING	→I SERIAL No. 89929	310050	0172225
				I→ SERIAL No. 89930	EAF8577A	0272215
		(54-57)	FAN TO GENERATOR	-	EAF8577A	0272215
741	FORD 4-CYL. 134	(57-62)	POWER STEERING	→I SERIAL No. 89929	310050	0172225
				I→ SERIAL No. 89930	EAF8577A	0272215
		(57-62)	FAN TO GENERATOR	-	EAF8577A	0272215
	FORD 4-CYL. 134 LPG	(57-62)	POWER STEERING	→I SERIAL No. 89929	310050	0172225
				I→ SERIAL No. 89930	EAF8577A	0272215
		(57-62)	FAN TO GENERATOR	-	EAF8577A	0272215
	FORD 4-CYL. 144	(57-62)	POWER STEERING	→I SERIAL No. 89929	310050	0172225
				I→ SERIAL No. 89930	EAF8577A	0272215
		(57-62)	FAN TO GENERATOR	-	EAF8577A	0272215
771	FORD 4-CYL. 134	(57-62)	POWER STEERING	→I SERIAL No. 89929	310050	0172225
				I→ SERIAL No. 89930	EAF8577A	0272215
		(57-62)	FAN TO GENERATOR	-	EAF8577A	0272215
	FORD 4-CYL. 134 LPG	(57-62)	POWER STEERING	→I SERIAL No. 89929	310050	0172225
				I→ SERIAL No. 89930	EAF8577A	0272215
		(57-62)	FAN TO GENERATOR	-	EAF8577A	0272215
	FORD 4-CYL. 144	(57-62)	POWER STEERING	→I SERIAL No. 89929	310050	0172225
				I→ SERIAL No. 89930	EAF8577A	0272215
		(57-62)	FAN TO GENERATOR	-	EAF8577A	0272215

811	FORD 4-CYL. 172	(57-62)	POWER STEERING	→I SERIAL No. 89929	310050	0172225
				I→ SERIAL No. 89930	EAF8577A	0272215
		(57-62)	FAN TO GENERATOR	-	EAF8577A	0272215
	FORD 4-CYL. 172 LPG	(57-62)	POWER STEERING	→I SERIAL No. 89929	310050	0172225
				I→ SERIAL No. 89930	EAF8577A	0272215
		(57-62)	FAN TO GENERATOR	-	EAF8577A	0272215
820	FORD 4-CYL. 172	(54-57)	POWER STEERING	→I SERIAL No. 89929	310050	0172225
				I→ SERIAL No. 89930	EAF8577A	0272215
		(54-57)	FAN TO GENERATOR	-	EAF8577A	0272215
	FORD 4-CYL. 172 LPG	(54-57)	POWER STEERING	→I SERIAL No. 89929	310050	0172225
				I→ SERIAL No. 89930	EAF8577A	0272215
		(54-57)	FAN TO GENERATOR	-	EAF8577A	0272215
821	FORD 4-CYL. 172	(57-62)	POWER STEERING	→I SERIAL No. 89929	310050	0172225
				I→ SERIAL No. 89930	EAF8577A	0272215
		(57-62)	FAN TO GENERATOR	-	EAF8577A	0272215
	FORD 4-CYL. 172 LPG	(57-62)	POWER STEERING	→I SERIAL No. 89929	310050	0172225
				I→ SERIAL No. 89930	EAF8577A	0272215
		(57-62)	FAN TO GENERATOR	-	EAF8577A	0272215
840	FORD 4-CYL. 172	(54-57)	POWER STEERING	→I SERIAL No. 89929	310050	0172225
				I→ SERIAL No. 89930	EAF8577A	0272215
		(54-57)	FAN TO GENERATOR	-	EAF8577A	0272215
	FORD 4-CYL. 172 LPG	(54-57)	POWER STEERING	→I SERIAL No. 89929	310050	0172225
				I→ SERIAL No. 89930	EAF8577A	0272215
		(54-57)	FAN TO GENERATOR	-	EAF8577A	0272215
841	FORD 4-CYL. 172	(57-62)	POWER STEERING	→I SERIAL No. 89929	310050	0172225
				I→ SERIAL No. 89930	EAF8577A	0272215
		(57-62)	FAN TO GENERATOR	-	EAF8577A	0272215
	FORD 4-CYL. 172 LPG	(57-62)	POWER STEERING	→I SERIAL No. 89929	310050	0172225
				I→ SERIAL No. 89930	EAF8577A	0272215
		(57-62)	FAN TO GENERATOR	-	EAF8577A	0272215
846	CUMMINS 6-CYL. 611	(88-93)	AIR CONDITIONING	-	92756	0172208
		(88-93)	ALTERNATOR	-	3037425	2388232
		(88-93)	FAN	-	3034944	0285264
850	FORD 4-CYL. 172	(54-57)	POWER STEERING	→I SERIAL No. 89929	310050	0172225
				I→ SERIAL No. 89930	EAF8577A	0272215
		(54-57)	FAN TO GENERATOR	-	EAF8577A	0272215
	FORD 4-CYL. 172 LPG	(54-57)	POWER STEERING	→I SERIAL No. 89929	310050	0172225
				I→ SERIAL No. 89930	EAF8577A	0272215
		(54-57)	FAN TO GENERATOR	-	EAF8577A	0272215
851	FORD 4-CYL. 172	(57-62)	POWER STEERING	→I SERIAL No. 89929	310050	0172225
				I→ SERIAL No. 89930	EAF8577A	0272215
		(57-62)	FAN TO GENERATOR	-	EAF8577A	0272215
	FORD 4-CYL. 172 LPG	(57-62)	POWER STEERING	→I SERIAL No. 89929	310050	0172225
				I→ SERIAL No. 89930	EAF8577A	0272215
		(57-62)	FAN TO GENERATOR	-	EAF8577A	0272215
856	CUMMINS 6-CYL. 611	(88-91)	AIR CONDITIONING	-	92756	0172208
		(88-91)	ALTERNATOR	-	3037425	2388232
		(88-91)	FAN	-	3034944	0285264

860	FORD 4-CYL. 172	(54-57)	POWER STEERING	→I SERIAL No. 89929	310050	0172225
				I→ SERIAL No. 89930	EAF8577A	0272215
		(54-57)	FAN TO GENERATOR	-	EAF8577A	0272215
	FORD 4-CYL. 172 LPG	(54-57)	POWER STEERING	→I SERIAL No. 89929	310050	0172225
				I→ SERIAL No. 89930	EAF8577A	0272215
		(54-57)	FAN TO GENERATOR	-	EAF8577A	0272215
861	FORD 4-CYL. 172	(57-62)	POWER STEERING	→I SERIAL No. 89929	310050	0172225
				I→ SERIAL No. 89930	EAF8577A	0272215
		(57-62)	FAN TO GENERATOR	-	EAF8577A	0272215
	FORD 4-CYL. 172 LPG	(57-62)	POWER STEERING	→I SERIAL No. 89929	310050	0172225
				I→ SERIAL No. 89930	EAF8577A	0272215
		(57-62)	FAN TO GENERATOR	-	EAF8577A	0272215
871	FORD 4-CYL. 172	(57-62)	POWER STEERING	→I SERIAL No. 89929	310050	0172225
				I→ SERIAL No. 89930	EAF8577A	0272215
		(57-62)	FAN TO GENERATOR	-	EAF8577A	0272215
	FORD 4-CYL. 172 LPG	(57-62)	POWER STEERING	→I SERIAL No. 89929	310050	0172225
				I→ SERIAL No. 89930	EAF8577A	0272215
		(57-62)	FAN TO GENERATOR	-	EAF8577A	0272215
876	CUMMINS 6-CYL. 611	(88-91)	AIR CONDITIONING	-	92756	0172208
		(88-91)	ALTERNATOR	-	3037425	2388232
		(88-91)	FAN	-	3034944	0285264
881	FORD 4-CYL. 172	(57-62)	POWER STEERING	→I SERIAL No. 89929	310050	0172225
				I→ SERIAL No. 89930	EAF8577A	0272215
		(57-62)	FAN TO GENERATOR	-	EAF8577A	0272215
	FORD 4-CYL. 172 LPG	(57-62)	POWER STEERING	→I SERIAL No. 89929	310050	0172225
				I→ SERIAL No. 89930	EAF8577A	0272215
		(57-62)	FAN TO GENERATOR	-	EAF8577A	0272215
941	FORD 4-CYL. 172	(57-62)	POWER STEERING	→I SERIAL No. 89929	310050	0172225
				I→ SERIAL No. 89930	EAF8577A	0272215
		(57-62)	FAN TO GENERATOR	-	EAF8577A	0272215
	FORD 4-CYL. 172 LPG	(57-62)	POWER STEERING	→I SERIAL No. 89929	310050	0172225
				I→ SERIAL No. 89930	EAF8577A	0272215
		(57-62)	FAN TO GENERATOR	-	EAF8577A	0272215
946	CUMMINS 6-CYL. 855	(87-93)	AIR CONDITIONING	-	-	0272218
		(87-93)	ALTERNATOR	-	-	0372223
		(87-93)	WATER PUMP	-	217638	2484242
950	FORD 4-CYL. 172	(54-57)	POWER STEERING	→I SERIAL No. 89929	310050	0172225
				I→ SERIAL No. 89930	EAF8577A	0272215
		(54-57)	FAN TO GENERATOR	-	EAF8577A	0272215
	FORD 4-CYL. 172 LPG	(54-57)	POWER STEERING	→I SERIAL No. 89929	310050	0172225
				I→ SERIAL No. 89930	EAF8577A	0272215
		(54-57)	FAN TO GENERATOR	-	EAF8577A	0272215
951	FORD 4-CYL. 172	(57-62)	POWER STEERING	→I SERIAL No. 89929	310050	0172225
				I→ SERIAL No. 89930	EAF8577A	0272215
		(57-62)	FAN TO GENERATOR	-	EAF8577A	0272215
	FORD 4-CYL. 172 LPG	(57-62)	POWER STEERING	→I SERIAL No. 89929	310050	0172225
				I→ SERIAL No. 89930	EAF8577A	0272215
		(57-62)	FAN TO GENERATOR	-	EAF8577A	0272215

960	FORD 4-CYL. 172	(54-57)	POWER STEERING	→I SERIAL No. 89929	310050	0172225
				I→ SERIAL No. 89930	EAF8577A	0272215
		(54-57)	FAN TO GENERATOR	-	EAF8577A	0272215
	FORD 4-CYL. 172 LPG	(54-57)	POWER STEERING	→I SERIAL No. 89929	310050	0172225
				I→ SERIAL No. 89930	EAF8577A	0272215
		(54-57)	FAN TO GENERATOR	-	EAF8577A	0272215
961	FORD 4-CYL. 172	(57-62)	POWER STEERING	→I SERIAL No. 89929	310050	0172225
				I→ SERIAL No. 89930	EAF8577A	0272215
		(57-62)	FAN TO GENERATOR	-	EAF8577A	0272215
	FORD 4-CYL. 172 LPG	(57-62)	POWER STEERING	→I SERIAL No. 89929	310050	0172225
				I→ SERIAL No. 89930	EAF8577A	0272215
		(57-62)	FAN TO GENERATOR	-	EAF8577A	0272215
971	FORD 4-CYL. 172	(57-62)	POWER STEERING	→I SERIAL No. 89929	310050	0172225
				I→ SERIAL No. 89930	EAF8577A	0272215
		(57-62)	FAN TO GENERATOR	-	EAF8577A	0272215
	FORD 4-CYL. 172 LPG	(57-62)	POWER STEERING	→I SERIAL No. 89929	310050	0172225
				I→ SERIAL No. 89930	EAF8577A	0272215
		(57-62)	FAN TO GENERATOR	-	EAF8577A	0272215
981	FORD 4-CYL. 172	(57-62)	POWER STEERING	→I SERIAL No. 89929	310050	0172225
				I→ SERIAL No. 89930	EAF8577A	0272215
		(57-62)	FAN TO GENERATOR	-	EAF8577A	0272215
	FORD 4-CYL. 172 LPG	(57-62)	POWER STEERING	→I SERIAL No. 89929	310050	0172225
				I→ SERIAL No. 89930	EAF8577A	0272215
		(57-62)	FAN TO GENERATOR	-	EAF8577A	0272215
1000	SHIBAURA 2-CYL. 78	(73-78)	FAN TO ALTERNATOR	-	-	0172219
1100	SHIBAURA 2-CYL. 43	(83)	FAN TO ALTERNATOR	-	9845513	0173198
				-	-	0173200
1110	SHIBAURA 2-CYL. 43	(84-89)	FAN TO ALTERNATOR	-	9845513	0173198
1200	SHIBAURA 2-CYL. 49	(80-83)	FAN TO ALTERNATOR	-	-	0173200
1210	SHIBAURA 3-CYL. 54	(83-89)	FAN TO ALTERNATOR	-	-	0173198
1300	SHIBAURA 2-CYL. 49	(79-82)	FAN TO ALTERNATOR	-	-	0173200
1500	SHIBAURA 2-CYL. 61	(79-83)	FAN TO ALTERNATOR	-	-	0172219
	SHIBAURA 2-CYL. 69	(79-83)	FAN TO ALTERNATOR	-	-	0172219
1600	SHIBAURA 2-CYL. 78	(76-79)	FAN TO ALTERNATOR	-	-	0172219
1700	SHIBAURA 2-CYL. 78	(79-83)	FAN TO ALTERNATOR	-	-	0172219
1710	SHIBAURA 3-CYL. 85	(83-86)	FAN TO ALTERNATOR	-	-	0173205
2000	FORD 3-CYL. 158	(62-75)	POWER STEERING	-	EAF8577A	0272215
		(62-75)	FAN TO ALTERNATOR/GENERATOR	-	-	0372240
2100	FORD 3-CYL. 158	(67-75)	POWER STEERING	-	EAF8577A	0272215
		(67-75)	FAN TO ALTERNATOR/GENERATOR	-	-	0372240
2310	FORD 3-CYL. 158	(82-85)	FAN	-	D3NN10C318D	0372242
2600	FORD 3-CYL. 158	(77-81)	AIR CONDITIONING	-	86514609	1472236
		(76-81)	ALTERNATOR	-	9604339	0372240
		(77-81)	FAN	+ AIR CONDITIONING	86518903	0172188
2610	FORD 3-CYL. 158	(82-83)	FAN	-	D3NN10C318D	0372242
	FORD 3-CYL. 175	(82-83)	FAN	-	D3NN10C318D	0372242
3000	FORD 3-CYL. 158	(65-76)	POWER STEERING	-	EAF8577A	0272215
		(65-76)	FAN TO ALTERNATOR/GENERATOR	-	-	0372240
	FORD 3-CYL. 175	(65-76)	POWER STEERING	-	EAF8577A	0272215
		(65-76)	FAN TO ALTERNATOR/GENERATOR	-	-	0372240

3100	FORD 3-CYL. 158	(66-75)	POWER STEERING	-	EAF8577A	0272215
		(66-75)	FAN TO ALTERNATOR/GENERATOR	-	-	0372240
	FORD 3-CYL. 175	(66-75)	POWER STEERING	-	EAF8577A	0272215
		(66-75)	FAN TO ALTERNATOR/GENERATOR	-	-	0372240
3300	FORD 3-CYL. 175	(68-75)	POWER STEERING	-	EAF8577A	0272215
		(68-75)	FAN TO ALTERNATOR/GENERATOR	-	-	0372240
3310	FORD 3-CYL. 175	(68-75)	POWER STEERING	-	EAF8577A	0272215
		(68-75)	FAN TO ALTERNATOR/GENERATOR	-	-	0372240
3330	FORD 3-CYL. 158	(68-75)	POWER STEERING	-	EAF8577A	0272215
		(68-75)	FAN TO ALTERNATOR/GENERATOR	-	-	0372240
	FORD 3-CYL. 175	(68-75)	POWER STEERING	-	EAF8577A	0272215
		(68-75)	FAN TO ALTERNATOR/GENERATOR	-	-	0372240
3400	FORD 3-CYL. 175	(65-75)	FAN TO ALTERNATOR	-	-	0372242
		(65-75)	WATER PUMP TO ALTERNATOR	-	D5NN10C318A	0372197
3600	FORD 3-CYL. 175	(75-81)	FAN TO ALTERNATOR	-	-	0372242
		(75-81)	WATER PUMP TO ALTERNATOR	-	D5NN10C318A	0372197
3610	FORD 3-CYL. 175	(82-83)	FAN TO ALTERNATOR	-	-	0372242
		(82-83)	WATER PUMP TO ALTERNATOR	-	D5NN10C318A	0372197
	FORD 3-CYL. 192	(82-83)	FAN TO ALTERNATOR	-	-	0372242
		(82-83)	WATER PUMP TO ALTERNATOR	-	D5NN10C318A	0372197
4000	FORD 3-CYL. 201	(65-75)	POWER STEERING	-	EAF8577A	0272215
		(65-75)	FAN TO ALTERNATOR/GENERATOR	-	-	0372240
4100	FORD 3-CYL. 183	(76-81)	FAN TO ALTERNATOR	-	-	0372242
		(76-81)	WATER PUMP TO ALTERNATOR	-	D5NN10C318A	0372197
4330	FORD 3-CYL. 201	(68-75)	POWER STEERING	-	EAF8577A	0272215
		(68-75)	FAN TO ALTERNATOR/GENERATOR	-	-	0372240
4340	FORD 3-CYL. 201	(68-75)	POWER STEERING	-	EAF8577A	0272215
		(68-75)	FAN TO ALTERNATOR/GENERATOR	-	-	0372240
4400	FORD 3-CYL. 192	(68-74)	FAN TO ALTERNATOR	-	-	0372242
		(68-74)	WATER PUMP TO ALTERNATOR	-	D5NN10C318A	0372197
4600	FORD 3-CYL. 192	(75-81)	FAN TO ALTERNATOR	-	-	0372242
		(75-81)	WATER PUMP TO ALTERNATOR	-	D5NN10C318A	0372197
	FORD 3-CYL. 201	(75-81)	FAN TO ALTERNATOR	-	-	0372242
		(75-81)	WATER PUMP TO ALTERNATOR	-	D5NN10C318A	0372197
4830	FORD 3-CYL. 256	(89-93)	FAN TO ALTERNATOR	-	F7NN20C318BA	0372242
5000	FORD 4-CYL. 233	(62-67)	POWER STEERING	-	EAF8577A	0272215
		(62-67)	FAN TO ALTERNATOR/GENERATOR	-	-	0372240
	FORD 4-CYL. 256	(68-75)	POWER STEERING	-	EAF8577A	0272215
		(68-75)	FAN TO ALTERNATOR/GENERATOR	-	-	0372240
5100	FORD 4-CYL. 256	(65-76)	POWER STEERING	-	EAF8577A	0272215
		(65-76)	FAN TO ALTERNATOR/GENERATOR	-	-	0372240
5600	FORD 4-CYL. 233	(75-81)	FAN TO ALTERNATOR	-	-	0372242
		(75-81)	WATER PUMP TO ALTERNATOR	-	D5NN10C318A	0372197
6000	FORD 6-CYL. 223	(61-67)	FAN	-	C0NN8A602B	1473203
		(61-67)	WATER PUMP TO GENERATOR	-	C0NN8620B	0173210
	FORD 6-CYL. 242	(61-67)	FAN	-	C0NN8A602B	1473203
		(61-67)	WATER PUMP TO GENERATOR	-	C0NN8620B	0173210
6100	FORD 6-CYL. 223	(63-67)	FAN	-	C0NN8A602B	1473203
		(63-67)	WATER PUMP TO GENERATOR	-	C0NN8620B	0173210
	FORD 6-CYL. 242	(63-67)	FAN	-	C0NN8A602B	1473203
		(63-67)	WATER PUMP TO GENERATOR	-	C0NN8620B	0173210

6600	FORD 4-CYL. 256	(75-81)	FAN TO ALTERNATOR	-	-	0372240
		(75-81)	WATER PUMP TO ALTERNATOR	-	D5NN10C318A	0372197
6700	FORD 4-CYL. 255	(77-81)	AIR CONDITIONING	-	C9NN10C318B	1472238
		(77-81)	ALTERNATOR	-	9604339	0372240
		(77-81)	FAN	+ AIR CONDITIONING	86518903	0172188
7000	FORD 4-CYL. 256	(71-75)	FAN TO ALTERNATOR/GENERATOR	-	C9NN10C318A	0372240
7100	FORD 4-CYL. 256	(73-75)	FAN TO ALTERNATOR/GENERATOR	-	C9NN10C318A	0372240
7200	FORD 4-CYL. 256	(73-75)	FAN TO ALTERNATOR/GENERATOR	-	C9NN10C318A	0372240
7600	FORD 4-CYL. 255	(75-81)	FAN TO ALTERNATOR	-	-	0372242
		(75-81)	WATER PUMP TO ALTERNATOR	-	D5NN10C318A	0372197
	FORD 4-CYL. 268	(75-81)	FAN TO ALTERNATOR	-	-	0372242
		(75-81)	WATER PUMP TO ALTERNATOR	-	D5NN10C318A	0372197
7700	FORD 4-CYL. 255	(76-83)	AIR CONDITIONING	-	C9NN10C318B	1472238
				-	C9NN8620A	0372242
		(76-83)	ALTERNATOR	-	D5NN10C318A	0372197
		(76-83)	FAN TO POWER STEERING	-	D6NN8620A	0372223
	FORD 4-CYL. 268	(76-83)	AIR CONDITIONING	-	C9NN10C318B	1472238
				-	C9NN8620A	0372242
		(76-83)	ALTERNATOR	-	D5NN10C318A	0372197
		(76-83)	FAN TO POWER STEERING	-	D6NN8620A	0372223
8000	FORD 6-CYL. 401	(68-72)	FAN	-	C7NN8620A	0173240
				FEB. 1, 1973 → X	D2NN8620A	0372244
				JAN. 31, 1973 → X	C7NN8620A	0173240
		(68-73)	WATER PUMP TO ALTERNATOR	-	C7NN8620B	0173240
				-	C9NN10C318B	1472238
				-	C9NN10C318C	0372242
		(68-73)	WATER PUMP TO GENERATOR	-	-	0372240
8600	FORD 6-CYL. 401	(73-77)	AIR CONDITIONING	-	D3NN19D621B	0172206
		(73-77)	FAN	-	D2NN8620A	0372244
		(73-77)	WATER PUMP TO ALTERNATOR	-	-	0372242
8700	FORD 6-CYL. 401	(76-79)	WATER PUMP TO ALTERNATOR	-	D6NN8620B	0272247
9000	FORD 6-CYL. 401	(73)	FAN	FEB. 1973 → X	D2NN8620A	0372244
		(69-73)	WATER PUMP TO ALTERNATOR	-	C7NN8620B	0173240
				-	C9NN10C318B	1472238
				-	C9NN10C318C	0372242
		(69-73)	WATER PUMP TO GENERATOR	-	-	0372240
9600	FORD 6-CYL. 401	(72-76)	AIR CONDITIONING	-	D3NN19D621B	0172206
		(72-76)	FAN	+ 57" BELT O.C.; + 25/64" BELT TOP WIDTH	C7NN8620B	0173240
				+ 57" BELT O.C.; + 31/64" BELT TOP WIDTH	D2NN8620A	0372244
		(72-76)	WATER PUMP TO ALTERNATOR	-	-	0372242
9700	FORD 6-CYL. 401	(76-79)	WATER PUMP TO ALTERNATOR	-	D6NN8620B	0272247
335 INDUSTRIAL	FORD 3-CYL. 175	(75-80)	FAN TO ALTERNATOR	-	C9NN10C318A	0372240
420 INDUSTRIAL	FORD 4-CYL. 183	(75-88)	FAN TO ALTERNATOR	-	C9NN10C318A	0372240
445 INDUSTRIAL	FORD 4-CYL. 183	(80-85)	FAN TO ALTERNATOR	-	-	0372242
4500 INDUSTRIAL	FORD 3-CYL. 201	(67-73)	FAN TO ALTERNATOR	-	-	0372242
		(67-73)	WATER PUMP TO ALTERNATOR	-	D5NN10C318A	0372197
4600SU	FORD 3-CYL. 201	(76-81)	FAN TO ALTERNATOR	-	-	0372242
		(76-81)	WATER PUMP TO ALTERNATOR	-	D5NN10C318A	0372197

540 INDUSTRIAL	FORD 3-CYL. 201	(80-85)	FAN TO ALTERNATOR	− 72A. ALTERNATOR	D6NN8620A	0372223
		(80-85)	WATER PUMP TO ALTERNATOR	+ 72A. ALTERNATOR	D7NN10C318A	0172195
555 INDUSTRIAL	FORD 3-CYL. 201	(80-85)	FAN TO ALTERNATOR	− 72A. ALTERNATOR	D6NN8620A	0372223
		(80-85)	WATER PUMP TO ALTERNATOR	+ 72A. ALTERNATOR	D7NN10C318A	0172195
6700 EC2	FORD 4-CYL. 255	(77-82)	FAN	-	D5NN8620A	0372223
		(77-82)	FAN TO ALTERNATOR	-	C9NN8620A	0372242
6710 EC3	FORD 4-CYL. 268	(77-81)	AIR CONDITIONING	-	C9NN10C318B	1472238
		(77-81)	ALTERNATOR	-	D5NN10C318A	0372197
		(77-81)	FAN	-	D6NN8620A	0372223
		(77-81)	FAN TO ALTERNATOR	-	D5NN10C318C	0372193
7400 FC1	FORD 4-CYL. 256	(75-76)	FAN TO ALTERNATOR/GENERATOR	-	C9NN10C318A	0372240
TW10	FORD 6-CYL. 401	(79-83)	AIR CONDITIONING	-	C9NN10C318A	0372240
		(79-83)	FAN	-	D6NN8620B	0272247
		(79-83)	WATER PUMP TO ALTERNATOR	-	D8NN10C318AA	0372245
TW15	FORD 6-CYL. 401	(83-86)	AIR CONDITIONING	-	C9NN10C318B	1472238
				-	D8NN10C318BA	0172195
		(83-86)	FAN	-	D6NN8620B	0272247
		(83-86)	WATER PUMP TO ALTERNATOR	-	D8NN10C318AA	0372245
TW20	FORD 6-CYL. 401	(79-83)	AIR CONDITIONING	-	C9NN10C318A	0372240
		(79-83)	FAN	-	D6NN8620B	0272247
		(79-83)	WATER PUMP TO ALTERNATOR	-	D8NN10C318AA	0372245
TW25	FORD 6-CYL. 401	(83-86)	AIR CONDITIONING	-	C9NN10C318B	1472238
				-	D8NN10C318BA	0172195
		(83-86)	FAN	-	D6NN8620B	0272247
		(83-86)	WATER PUMP TO ALTERNATOR	-	D8NN10C318AA	0372245
TW30	FORD 6-CYL. 401	(79-83)	AIR CONDITIONING	-	C9NN10C318A	0372240
		(79-83)	FAN	-	D6NN8620B	0272247
		(79-83)	WATER PUMP TO ALTERNATOR	-	D8NN10C318AA	0372245
TW35	FORD 6-CYL. 401	(83-86)	AIR CONDITIONING	-	C9NN10C318B	1472238
				-	D8NN10C318BA	0172195
		(83-86)	FAN	-	D6NN8620B	0272247
		(83-86)	WATER PUMP TO ALTERNATOR	-	D8NN10C318AA	0372245
TW5	FORD 6-CYL. 401	(83-86)	AIR CONDITIONING	-	E3NN19D621AA	0372242
		(83-86)	FAN	-	D6NN8620B	0272247
		(83-86)	WATER PUMP TO ALTERNATOR	-	D8NN10C318AA	0372245
FORD-NEW HOLLAND						
1120	SHIBAURA 3-CYL. 54	(87-93)	FAN TO ALTERNATOR	-	-	0172206
1220	SHIBAURA 3-CYL. 58	(87-99)	FAN TO ALTERNATOR	-	-	0172206
1310	SHIBAURA 3-CYL. 58	(83-86)	FAN TO ALTERNATOR	-	-	0173198
1320	SHIBAURA 3-CYL. 77	(87-98)	FAN TO ALTERNATOR	-	-	0172206
1510	SHIBAURA 3-CYL. 68	(83-87)	FAN TO ALTERNATOR	-	-	0173205
1520	SHIBAURA 3-CYL. 81	(87-98)	FAN TO ALTERNATOR	-	-	0172206
1620	SHIBAURA 3-CYL. 81	(92-97)	FAN TO ALTERNATOR	-	-	0172208
1630	SHIBAURA 3-CYL. 81	(97-99)	FAN	-	86517954	1400071
1715	SHIBAURA 3-CYL. 81	(92-97)	FAN TO ALTERNATOR	-	-	0172208
1720	SHIBAURA 3-CYL. 91	(87-00)	FAN TO ALTERNATOR	-	-	0172208
1725	SHIBAURA 3-CYL. 81	(97-99)	FAN	-	86517954	1400071
1910	SHIBAURA 3-CYL. 104	(83-86)	FAN TO ALTERNATOR	-	-	0172219
1920	SHIBAURA 4-CYL. 122	(87-00)	FAN TO ALTERNATOR	-	-	0172208
1925	IVECO 3-CYL. 91	(96-98)	FAN	-	86517954	1400071
2110	SHIBAURA 4-CYL. 139	(83-87)	FAN TO ALTERNATOR	-	REMF6430	0172219

2120	SHIBAURA 4-CYL. 139	(87-02)	FAN TO ALTERNATOR	-	-	0272218
2810	FORD 3-CYL. 158	(83-90)	FAN TO ALTERNATOR	-	-	0372240
2910	FORD 3-CYL. 175	(83-90)	FAN TO ALTERNATOR	-	D3NN10C318C	0372242
3230	FORD 3-CYL. 192	(90-94)	FAN TO ALTERNATOR	-	D3NN10C318C	0372242
3415	FORD 4-CYL. 135	(93-02)	FAN TO ALTERNATOR	-	-	0172206
3430	FORD 3-CYL. 192	(90-98)	FAN TO ALTERNATOR	-	D3NN10C318C	0372242
3830	FORD 3-CYL. 165	(92-99)	FAN TO ALTERNATOR	-	-	0173224
3910	FORD 3-CYL. 192	(83-89)	FAN TO ALTERNATOR	-	-	0372240
3930	FORD 3-CYL. 192	(96-01)	FAN TO ALTERNATOR	-	D3NN10C318C	0372242
	FORD 3-CYL. 201	(90-95)	FAN TO ALTERNATOR	-	D3NN10C318C	0372242
4610	FORD 3-CYL. 201	(82-90)	FAN TO ALTERNATOR	-	-	0372242
4630	FORD 3-CYL. 192	(96-02)	FAN TO ALTERNATOR	-	D3NN10C318C	0372242
	FORD 3-CYL. 201	(89-95)	FAN TO ALTERNATOR	-	D3NN10C318C	0372242
4835	FIAT 4-CYL. 220	(96-99)	AIR CONDITIONING	-	5140009	0173214
		(96-99)	ALTERNATOR	-	4796327	0173223
		(96-99)	FAN	-	5140010	0273217
5030	FORD 4-CYL. 256	(92-99)	FAN TO ALTERNATOR	-	-	0372242
5530	FORD 4-CYL. 220	(92-96)	FAN TO ALTERNATOR	-	-	0372223
5610	FORD 4-CYL. 256	(82-93)	AIR CONDITIONING	-	C9NN10C318B	1472238
		(82-93)	ALTERNATOR	-	D5NN10C318A	0372197
		(82-93)	FAN	-	D6NN8620A	0372223
		(82-93)	FAN TO ALTERNATOR	-	-	0372240
5635	FIAT 4-CYL. 238	(96-99)	AIR CONDITIONING	-	5140009	0173214
		(96-99)	ALTERNATOR	-	4796327	0173223
		(96-99)	FAN	-	5140010	0273217
5640	FORD 4-CYL. 268	(91-97)	FAN TO ALTERNATOR	-	F0NN8620FA	0384325
5900	FORD 4-CYL. 256	(85-91)	FAN TO ALTERNATOR	-	-	0372240
6530	FIAT 4-CYL. 238	(92-97)	FAN TO ALTERNATOR	-	-	0173224
6610	FORD 4-CYL. 268	(81-93)	AIR CONDITIONING	-	E3NN19D621AA	0372242
		(81-93)	FAN	-	-	0172221
		(81-93)	FAN TO ALTERNATOR	-	D5NN10C318C	0372193
6635	FIAT 4-CYL. 238	(96-99)	AIR CONDITIONING	-	5140009	0173214
		(96-99)	ALTERNATOR	-	4796327	0173223
		(96-99)	FAN	-	5140010	0273217
6640	FORD 4-CYL. 304	(91-97)	SERPENTINE	+ AIR CONDITIONING	F3NN8620AA	0342140
				− AIR CONDITIONING	-	0384325
7530	FIAT 6-CYL. 331	(91-96)	FAN TO ALTERNATOR	-	-	0373221
7610	FORD 4-CYL. 268	(81-91)	AIR CONDITIONING	-	-	0372242
		(81-91)	FAN	-	-	0372223
		(81-91)	FAN TO ALTERNATOR	-	D5NN10C318C	0372193
7635	FIAT 4-CYL. 238	(96-99)	AIR CONDITIONING	-	5140009	0173214
		(96-99)	ALTERNATOR	-	4796327	0173223
		(96-99)	FAN	-	5140010	0273217
7710	FORD 4-CYL. 268	(81-91)	AIR CONDITIONING	-	-	0372242
		(81-91)	FAN	-	-	0372223
		(81-91)	FAN TO ALTERNATOR	-	D5NN10C318C	0372193
7740	FORD 4-CYL. 304	(91-97)	SERPENTINE	+ AIR CONDITIONING	F3NN8620AA	0342140
				− AIR CONDITIONING	-	0384325
7810	FORD 6-CYL. 401	(78-91)	FAN	-	-	0172221
		(78-91)	FAN TO ALTERNATOR	-	E4NN10C318AA	0172195
7840	FORD 6-CYL. 401	(91-95)	FAN	+ AIR CONDITIONING	87309963	0342140
				- AIR CONDITIONING	87316556	0384323

8160	GENESIS 6-CYL. 456	(96-99)	FAN, ALTERNATOR TO AIR CONDITIONING	-	87800858	0385306
8210	FORD 6-CYL. 401	(82-91)	WATER PUMP TO ALTERNATOR	-	-	0372245
8240	FORD 6-CYL. 456	(91-96)	FAN	+ AIR CONDITIONING	87309963	0342140
				− AIR CONDITIONING	87316556	0384323
8260	GENESIS 6-CYL. 456	(96-99)	FAN, ALTERNATOR TO AIR CONDITIONING	-	87800858	0385306
8340	FORD 6-CYL. 456	(91-96)	FAN	+ AIR CONDITIONING	87309963	0342140
				− AIR CONDITIONING	87316556	0384323
8360	GENESIS 6-CYL. 456	(96-99)	FAN, ALTERNATOR TO AIR CONDITIONING	-	87800858	0385306
8530	FORD 6-CYL. 401	(89-95)	AIR CONDITIONING	-	-	0372242
		(89-95)	FAN	-	D6NN8620B	0272247
		(89-95)	WATER PUMP TO ALTERNATOR	-	-	0272247
8560	GENESIS 6-CYL. 456	(96-99)	FAN, ALTERNATOR TO AIR CONDITIONING	-	87800858	0385306
8630	FORD 6-CYL. 401	(89-95)	AIR CONDITIONING	-	-	0372242
		(89-95)	FAN	-	D6NN8620B	0272247
		(89-95)	WATER PUMP TO ALTERNATOR	-	-	0272247
8670	GENESIS 6-CYL. 456	(93-02)	FAN, ALTERNATOR TO AIR CONDITIONING	-	86013678	1485350
8730	FORD 6-CYL. 401	(89-95)	AIR CONDITIONING	-	-	0372242
		(89-95)	FAN	-	D6NN8620B	0272247
		(89-95)	WATER PUMP TO ALTERNATOR	-	-	0272247
8770	GENESIS 6-CYL. 456	(93-02)	FAN, ALTERNATOR TO AIR CONDITIONING	-	86013678	1485350
8830	FORD 6-CYL. 401	(89-95)	AIR CONDITIONING	-	-	0372242
		(89-95)	FAN	-	D6NN8620B	0272247
		(89-95)	WATER PUMP TO ALTERNATOR	-	-	0272247
8870	GENESIS 6-CYL. 456	(93-02)	FAN, ALTERNATOR TO AIR CONDITIONING	-	86013678	1485350
8970	GENESIS 6-CYL. 456	(93-02)	FAN, ALTERNATOR TO AIR CONDITIONING	-	86013678	1485350
9682	CUMMINS N14	(95-99)	AIR CONDITIONING	-	86514599	0272210
		(95-97)	ALTERNATOR	-	9707244	0172221
				SEPT. 7, 1998 →| X	9707244	0172221
		(95-99)	WATER PUMP	-	86514607	2484242
3010S	IVECO 3-CYL. 165	(96-03)	FAN	-	4796327	0173223
4030N	FORD 3-CYL. 179	(92-97)	AIR CONDITIONING	-	9966451	0122155
		(92-97)	FAN	-	4809680	0173222
4230N	FORD 4-CYL. 220	(92-97)	AIR CONDITIONING	-	9966451	0122155
		(92-97)	FAN	-	4796327	0173223
4430N	FORD 4-CYL. 238	(92-98)	AIR CONDITIONING	-	9966451	0122155
		(92-98)	FAN	-	4796327	0173223
4430V	FORD 4-CYL. 220	(97-98)	AIR CONDITIONING	-	9966451	0122155
		(97-98)	FAN	-	4796327	0173223
5610S	GENESIS 4-CYL. 268	(93-96)	FAN	-	87800129	0372242
	GENESIS 4-CYL. 304	(96-03)	FAN	-	87800129	0372242
6610S	GENESIS 4-CYL. 304	(94-03)	FAN	-	87800129	0372242
7610S	GENESIS 4-CYL. 304	(94-03)	FAN	-	87800129	0372242
TW15	FORD 6-CYL. 401	(87-90)	AIR CONDITIONING	-	C9NN10C318B	1472238
				-	D8NN10C318BA	0172195
		(87-90)	FAN	-	D6NN8620B	0272247
		(87-90)	WATER PUMP TO ALTERNATOR	-	D8NN10C318AA	0372245
TW25	FORD 6-CYL. 401	(87-90)	AIR CONDITIONING	-	C9NN10C318B	1472238
				-	D8NN10C318BA	0172195
		(87-90)	FAN	-	D6NN8620B	0272247
		(87-90)	WATER PUMP TO ALTERNATOR	-	D8NN10C318AA	0372245

TW35	FORD 6-CYL. 401	(87-90)	AIR CONDITIONING	-	C9NN10C318B	1472238
				-	D8NN10C318BA	0172195
		(87-90)	FAN	-	D6NN8620B	0272247
		(87-90)	WATER PUMP TO ALTERNATOR	-	D8NN10C318AA	0372245
TW5	FORD 6-CYL. 401	(87-90)	AIR CONDITIONING	-	E3NN19D621AA	0372242
		(87-90)	FAN	-	D6NN8620B	0272247
		(87-90)	WATER PUMP TO ALTERNATOR	-	D8NN10C318AA	0372245
FORDSON						
DEXTA	PERKINS 3-CYL. 144	(58-61)	FAN	-	-	0172221
MAJOR	FORD 4-CYL. 220	(53-58)	POWER STEERING	-	-	0172221
		(53-58)	FAN TO GENERATOR	-	-	0302098
POWER MAJOR	FORD 4-CYL. 220	(58-61)	POWER STEERING	-	-	0172221
		(58-61)	FAN TO GENERATOR	-	-	0302098
SUPER DEXTA	PERKINS 3-CYL. 153	(61-64)	FAN TO GENERATOR	-	E1ADKN8620C	0172221
SUPER MAJOR	FORD 4-CYL. 220	(61-64)	POWER STEERING	-	-	0172221
		(61-64)	FAN TO GENERATOR	-	-	0302098
HESSTON						
580	FIAT 3-CYL. 168	(81-84)	FAN TO ALTERNATOR	-	-	0373225
666	FIAT 4-CYL. 211	(83-90)	FAN TO ALTERNATOR	-	-	0173223
680	FIAT 4-CYL. 211	(80-84)	FAN TO ALTERNATOR	-	-	0373225
766	FIAT 4-CYL. 224	(83-90)	FAN TO ALTERNATOR	-	-	0173223
980	FIAT 6-CYL. 316	(81-84)	FAN TO AIR CONDITIONING	-	-	0173240
		(81-84)	FAN TO ALTERNATOR	-	-	0373225
1580	FIAT 6-CYL. 494	(81-84)	AIR CONDITIONING	-	-	0173257
		(81-84)	FAN TO ALTERNATOR	-	-	0173240
1880	FIAT 6-CYL. 494	(81-84)	AIR CONDITIONING	-	-	0173257
		(81-84)	FAN TO ALTERNATOR	-	-	0173240
100-90	FIAT 6-CYL. 331	(84-92)	FAN TO ALTERNATOR	-	2604796324	0373225
130-90	FIAT 6-CYL. 358	(84-91)	FAN TO AIR CONDITIONING	-	-	0173249
		(84-91)	FAN TO ALTERNATOR	-	-	0173227
1380DT	FIAT 6-CYL. 335	(81-84)	FAN TO AIR CONDITIONING	-	5112185	0173245
		(81-84)	FAN TO ALTERNATOR	-	-	0173227
160-90	FIAT 6-CYL. 494	(84-92)	ALTERNATOR	-	-	0172221
		(84-92)	FAN	-	-	0172230
		(84-92)	FAN TO AIR CONDITIONING	+ SINGLE BELT	-	0372203
		(84-92)	FAN TO ALTERNATOR	-	-	0173240
180-90	FIAT 6-CYL. 494	(84-92)	ALTERNATOR	-	-	0172221
		(84-92)	FAN	-	-	0172230
		(84-92)	FAN TO AIR CONDITIONING	+ SINGLE BELT	-	0372203
		(84-92)	FAN TO ALTERNATOR	-	-	0173240
45-66	FIAT 3-CYL. 165	(86-91)	FAN TO ALTERNATOR	-	-	0173222
55-46	FIAT 3-CYL. 165	(87-89)	FAN TO ALTERNATOR	-	2604796324	0373225
55-56	FIAT 3-CYL. 165	(84-91)	FAN TO ALTERNATOR	-	2604796324	0373225
55-76	FIAT 3-CYL. 165	(81-90)	FAN TO ALTERNATOR	-	-	0373221
60-66	FIAT 3-CYL. 179	(84-91)	FAN TO ALTERNATOR	-	-	0373225
65-46	FIAT 4-CYL. 220	(87-92)	FAN TO ALTERNATOR	-	2604796324	0373225
65-56	FIAT 4-CYL. 220	(87-92)	FAN TO ALTERNATOR	-	2604796324	0373225
70-66	FIAT 4-CYL. 220	(84-92)	FAN TO ALTERNATOR	-	-	0373225
70-90	FIAT 4-CYL. 220	(84-91)	AIR CONDITIONING	-	-	0273215
		(84-91)	FAN	-	-	0173220
		(84-91)	FAN TO ALTERNATOR	-	-	0273228
80-66	FIAT 4-CYL. 238	(84-91)	FAN TO ALTERNATOR	-	-	0173223

80-76DT	FIAT 4-CYL. 238	(89-92)	FAN TO ALTERNATOR	-	-	0173223
80-90	FIAT 4-CYL. 238	(84-92)	FAN	-	-	0173219
		(84-92)	FAN TO AIR CONDITIONING	-	-	0273215
		(84-92)	FAN TO ALTERNATOR	-	-	0173227
90-90	FIAT 5-CYL. 298	(84-92)	FAN TO ALTERNATOR	-	-	0373225
HESSTON-FIAT						
60-75CV	HESSTON-FIAT 8035.05	(90-93)	FAN TO ALTERNATOR	-	-	0173222
70-65CM	HESSTON-FIAT 8045.06	(84-91)	FAN TO ALTERNATOR	-	-	0373225
70-75C	HESSTON-FIAT 8055.05	(90-93)	FAN TO ALTERNATOR	-	2604796324	0373225
70-75CM	HESSTON-FIAT 8045.06	(90-93)	FAN TO ALTERNATOR	-	2604796324	0373225
95-55C	HESSTON-FIAT 8055.04	(83-93)	FAN TO ALTERNATOR	-	-	0373225
IMT						
536	IMR 3-CYL. 152	(89-90)	FAN TO ALTERNATOR	-	-	0173220
539	IMR 3-CYL. 152	(89-93)	FAN TO ALTERNATOR	-	-	0173220
542	IMR 3-CYL. 152	(86-93)	FAN TO ALTERNATOR	-	-	0173220
560	IMR 4-CYL. 203	(86-93)	FAN TO ALTERNATOR	-	-	0372223
565	IMR 4-CYL. 203	(85-93)	FAN TO ALTERNATOR	-	-	0372223
5136	IMR 6-CYL. 354	(89-91)	ALTERNATOR	-	-	0172221
		(89-91)	FAN TO AIR CONDITIONING	-	-	0122155
549DV	IMR 3-CYL. 152	(91-92)	FAN TO ALTERNATOR	-	-	0173220
577DV	IMR 4-CYL. 248	(87-93)	FAN TO ALTERNATOR	-	-	0372232
INT. HARVESTER						
100	IH 4-CYL. 123	(55-56)	GENERATOR	SERIAL No. 501 → 65000	52318DA	0172189
		(55-56)	FAN TO GENERATOR	→ SERIAL No. 65001	367697R1	0173217
130	IH 4-CYL. 123	(56-58)	GENERATOR	SERIAL No. 501 → 65000	52318DA	0172189
		(56-58)	FAN TO GENERATOR	→ SERIAL No. 65001	367697R1	0173217
140	IH 4-CYL. 123	(58-81)	GENERATOR	SERIAL No. 501 → 65000	52318DA	0172189
		(58-81)	FAN TO GENERATOR	→ SERIAL No. 65001	367697R1	0173217
234	MITSUBISHI 3-CYL. 52	(82-88)	FAN	-	676622R1	0173208
240	IH 4-CYL. 123	(58-62)	GENERATOR	SERIAL No. 501 → 65000	52318DA	0172189
		(58-62)	FAN TO GENERATOR	→ SERIAL No. 65001	367697R1	0173217
244	MITSUBISHI 3-CYL. 60	(82-85)	FAN TO ALTERNATOR	-	MD007528	0173208
254	MITSUBISHI 3-CYL. 65	(82-85)	FAN TO ALTERNATOR	-	MD007528	0173208
284	MAZDA 4-CYL. 71	(76-84)	FAN TO ALTERNATOR	-	-	0272210
330	IH 4-CYL. 135	(57-58)	FAN TO GENERATOR	-	367697R1	0173217
340	IH 4-CYL. 135	(59-63)	FAN TO GENERATOR	-	367697R1	0173217
	IH 4-CYL. 166	(58-63)	FAN TO GENERATOR	-	315969R1	1472227
354	IH 4-CYL. 143	(72-75)	GENERATOR	-	399480R1	0172195
404	IH 4-CYL. 135	(60-68)	FAN TO GENERATOR	-	387920R1	0173219
				-	403580R1	0173219
424	IH 4-CYL. 146	(64-67)	FAN TO GENERATOR	-	387920R1	0173219
				-	403580R1	0173219
	IH 4-CYL. 154	(64-67)	GENERATOR	-	48878D	0172195
444	IH 4-CYL. 152	(67-71)	FAN TO ALTERNATOR	-	387920R1	0173219
		(67-71)	FAN TO ALTERNATOR/GENERATOR	-	403580R1	0173219
	IH 4-CYL. 154	(67-71)	ALTERNATOR	-	401691R1	0172201
450	IH 4-CYL. 281	(56-58)	GENERATOR	-	49341D	0172201
				-	52318DA	0172189
454	IH 3-CYL. 179	(71-73)	FAN TO ALTERNATOR	-	534310R1	0372255
	IH 4-CYL. 157	(71-73)	FAN TO ALTERNATOR	-	523030R2	0173240

460	IH 6-CYL. 221	(58-63)	FAN TO ALTERNATOR	-	403617R1	0172225
		(58-63)	FAN TO GENERATOR	-	149635R1	0372223
	IH 6-CYL. 236	(58-63)	FAN	-	369290R1	0372223
		(58-63)	GENERATOR	-	316250R1	0422134
		(58-63)	FAN TO GENERATOR	-	385738R1	0422134
		(58-63)	WATER PUMP TO GENERATOR	-	-	0372223
464	IH 4-CYL. 175	(73-78)	FAN TO ALTERNATOR	-	1532030R2	0172235
484	IH 3-CYL. 179	(78-84)	FAN TO ALTERNATOR	-	-	0372255
500	IH 4-CYL. 146	(65-69)	FAN TO GENERATOR	-	676645R1	0173219
544	IH 4-CYL. 200	(68-73)	FAN TO ALTERNATOR	-	403303R1	0173240
		(68-73)	FAN TO GENERATOR	-	314606C2	0173240
	IH 4-CYL. 239	(68-73)	FAN	-	534311R1	1472251
		(68-73)	FAN TO ALTERNATOR	-	401128R1	0372245
		(68-73)	WATER PUMP TO ALTERNATOR	-	315969R1	1472227
560	IH 6-CYL. 263	(58-63)	FAN	-	369290R1	0372223
	IH 6-CYL. 282	(58-63)	FAN	-	369290R1	0372223
		(58-63)	WATER PUMP TO GENERATOR	-	190502R1	0422134
574	IH 4-CYL. 200	(70-78)	FAN TO ALTERNATOR/GENERATOR	-	532031R2	1573238
	IH 4-CYL. 239	(70-78)	WATER PUMP TO ALTERNATOR	-	403303R1	0173240
		(70-78)	FAN TO ALTERNATOR/GENERATOR	-	534311R1	1472251
584	IH 4-CYL. 206	(78-84)	FAN TO ALTERNATOR	-	-	1472251
600	IH 4-CYL. 350	(56-57)	FAN	+ POWER STEERING; − HYDRA-TOUCH HYDRAULICS	363599R1	1102110
		(56-57)	GENERATOR	-	365686R1	0172208
				-	48878D	0172195
606	IH 6-CYL. 221	(62-67)	FAN TO ALTERNATOR	-	403617R1	0172225
		(62-67)	FAN TO GENERATOR	-	149635R1	0372223
	IH 6-CYL. 236	(62-67)	FAN TO GENERATOR	→I SERIAL No. 13949	316250R1	0422134
				I→ SERIAL No. 13950	382228R1	0172235
650	IH 4-CYL. 350	(56-58)	FAN	+ POWER STEERING; − HYDRA-TOUCH HYDRAULICS	363599R1	1102110
		(56-58)	GENERATOR	-	365686R1	0172208
				-	48878D	0172195
656	IH 6-CYL. 263	(66-73)	FAN	-	396829R1	0172219
		(66-73)	WATER PUMP TO ALTERNATOR	-	403617R1	0172225
	IH 6-CYL. 281	(66-73)	AIR CONDITIONING	-	395463R1	0172253
		(66-73)	FAN	-	378113R2	1472227
				-	385738R1	0422134
				-	396829R1	0172219
				-	396830R1	0372232
		(66-73)	WATER PUMP TO ALTERNATOR/ GENERATOR	-	-	0422134
664	IH 4-CYL. 239	(72-74)	FAN TO ALTERNATOR/GENERATOR	-	401128R2	0372245
666	IH 6-CYL. 291	(72-76)	FAN	→I SERIAL No. 11050	403617R1	0172225
				I→ SERIAL No. 11051	406097R1	0372244
		(72-76)	WATER PUMP TO ALTERNATOR	-	393415R1	0172225
				-	530186R1	0372257
	IH 6-CYL. 312	(72-76)	FAN	-	393415R1	0172225
674	IH 4-CYL. 238	(73-78)	FAN TO ALTERNATOR	+ SYNCRO MESH TRANSMISSION	403303R1	0173240
684	IH 4-CYL. 239	(78-84)	FAN TO ALTERNATOR	-	527470R1	1472251

686	IH 6-CYL. 291	(76-81)	FAN	-	403617R1	0172225
		(76-81)	WATER PUMP TO ALTERNATOR	-	530186R1	0372257
	IH 6-CYL. 312	(76-81)	FAN	-	403617R1	0172225
706	IH 6-CYL. 263	(63-65)	FAN	-	378113R1	1472227
				-	393415R1	0172225
		(63-65)	WATER PUMP TO ALTERNATOR	-	393415R1	0172225
		(63-65)	WATER PUMP TO GENERATOR	-	316250R1	0422134
		(63-65)	WATER PUMP TO ALTERNATOR/ GENERATOR	-	-	0372223
	IH 6-CYL. 282	(63-65)	AIR CONDITIONING	-	395463R1	0172253
				-	397397R1	0372272
		(63-65)	FAN	→I SERIAL No. 49663	378113R1	1472227
				I→ SERIAL No. 49664	385674R1	0422134
		(63-65)	WATER PUMP TO ALTERNATOR	-	396543R1	0372257
		(63-65)	WATER PUMP TO ALTERNATOR/ GENERATOR	-	-	0422134
	IH 6-CYL. 291	(66-67)	FAN	-	378113R1	1472227
				-	393415R1	0172225
		(66-67)	WATER PUMP TO ALTERNATOR	-	393415R1	0172225
		(66-67)	WATER PUMP TO GENERATOR	-	316250R1	0422134
		(66-67)	WATER PUMP TO ALTERNATOR/ GENERATOR	-	-	0372223
	IH 6-CYL. 310	(66-67)	AIR CONDITIONING	-	395463R1	0172253
				-	397397R1	0372272
		(66-67)	FAN	→I SERIAL No. 49663	378113R1	1472227
				I→ SERIAL No. 49664	385674R1	0422134
		(66-67)	WATER PUMP TO ALTERNATOR	-	396543R1	0372257
		(66-67)	WATER PUMP TO ALTERNATOR/ GENERATOR	-	-	0422134
756	IH 6-CYL. 291	(67-71)	FAN	-	378113R1	1472227
				-	393415R1	0172225
		(67-71)	WATER PUMP TO ALTERNATOR	-	393415R1	0172225
		(67-71)	WATER PUMP TO GENERATOR	-	316250R1	0422134
		(67-71)	WATER PUMP TO ALTERNATOR/ GENERATOR	-	-	0372223
	IH 6-CYL. 310	(67-71)	AIR CONDITIONING	-	395463R1	0172253
		(67-71)	FAN	-	396543R1	0372257
		(67-71)	WATER PUMP TO ALTERNATOR	-	396543R1	0372257
		(67-71)	WATER PUMP TO ALTERNATOR/ GENERATOR	-	-	0422134
766	IH 6-CYL. 291	(71-76)	AIR CONDITIONING	-	242270R2	0172208
		(71-76)	FAN	-	403617R1	0172225
	IH 6-CYL. 360	(71-76)	AIR CONDITIONING	-	242270R2	0172208
		(71-76)	WATER PUMP TO ALTERNATOR	-	532746R1	1401125
784	IH 4-CYL. 246	(78-84)	FAN TO ALTERNATOR	-	-	1472251
806	IH 6-CYL. 301	(63-67)	AIR CONDITIONING	-	395463R1	0172253
		(63-67)	FAN	-	378113R1	1472227
				-	393415R1	0172225
		(63-67)	WATER PUMP TO ALTERNATOR	-	393415R1	0172225
		(63-67)	WATER PUMP TO ALTERNATOR/ GENERATOR	-	-	0372223
	IH 6-CYL. 361	(63-67)	AIR CONDITIONING	-	-	0372280
		(63-67)	FAN TO ALTERNATOR	-	385120R1	1401129
		(63-67)	FAN TO GENERATOR	-	380060R1	1401127

826	IH 6-CYL. 301	(69-71)	FAN TO ALTERNATOR	-	403617R1	0172225
	IH 6-CYL. 358	(69-71)	FAN TO ALTERNATOR	-	530076R1	0372257
856	IH 6-CYL. 301	(67-71)	AIR CONDITIONING	-	395463R1	0172253
		(67-71)	FAN	-	403617R1	0172225
	IH 6-CYL. 407	(67-71)	AIR CONDITIONING	-	395462R1	0372280
		(67-71)	FAN TO ALTERNATOR	-	385120R2	1401129
884	IH 4-CYL. 268	(78-84)	FAN TO ALTERNATOR	-	-	1472251
966	IH 6-CYL. 414	(71-76)	AIR CONDITIONING	-	242270R2	0172208
		(71-76)	FAN TO ALTERNATOR	+ DUAL BELTS	537072R1	1401125
				+ SINGLE BELT	532746R1	1401125
		(71-76)	FAN TO WATER PUMP	-	532746R1	1401125
986	IH 6-CYL. 436	(76-81)	FAN TO AIR CONDITIONING	-	874097C1	0172211
		(76-81)	FAN TO ALTERNATOR	+ AIR CONDITIONING	532746R1	1401125
				− AIR CONDITIONING	532746R1	1401125
1066	IH 6-CYL. 414	(71-76)	AIR CONDITIONING	-	242270R2	0172208
				-	874097C1	0172211
		(71-76)	FAN TO ALTERNATOR	-	480240C91	0372255
				-	532746R1	1401125
1086	IH 6-CYL. 414	(76-81)	AIR CONDITIONING	-	874097C1	0172211
		(76-81)	FAN TO ALTERNATOR	+ AIR CONDITIONING	532746R1	1401125
				− AIR CONDITIONING	532746R1	1401125
1206	IH 6-CYL. 361	(65-67)	AIR CONDITIONING	-	-	0372280
		(65-67)	FAN TO ALTERNATOR	-	-	1401129
1256	IH 6-CYL. 407	(67-69)	AIR CONDITIONING	-	-	1472251
		(67-69)	FAN TO ALTERNATOR	-	385120R2	1401129
1456	IH 6-CYL. 407	(69-71)	AIR CONDITIONING	-	-	1472251
		(69-71)	FAN TO ALTERNATOR	-	385120R2	1401129
1466	IH 6-CYL. 436	(71-76)	AIR CONDITIONING	-	242270R2	0172208
				-	874097C1	0172211
		(71-76)	FAN TO ALTERNATOR	-	480240C91	0372255
				-	532746R1	1401125
1468	IH V-8 550	(71-74)	AIR CONDITIONING	-	527621R1	0173230
		(71-74)	FAN	-	427205C91	0372231
		(71-74)	WATER PUMP TO ALTERNATOR	-	236161R2	0273228
1486	IH 6-CYL. 436	(76-81)	FAN TO AIR CONDITIONING	-	874097C1	0172211
		(76-81)	FAN TO ALTERNATOR	+ AIR CONDITIONING	532746R1	1401125
				− AIR CONDITIONING	532746R1	1401125
1566	IH 6-CYL. 436	(73-76)	AIR CONDITIONING	-	65337C2	0172208
		(73-76)	FAN TO ALTERNATOR	-	532746R1	1401125
1568	IH V-8 550	(73-76)	ALTERNATOR	-	236161R2	0273228
		(73-76)	FAN	-	242268R1	0372231
1586	IH 6-CYL. 436	(76-81)	FAN TO AIR CONDITIONING	-	874097C1	0172211
		(76-81)	FAN TO ALTERNATOR	+ AIR CONDITIONING	532746R1	1401125
				− AIR CONDITIONING	532746R1	1401125
3088	IH 6-CYL. 358	(81-85)	AIR CONDITIONING	-	280210C2	1472238
				-	680614R1	0172235
		(81-85)	FAN TO ALTERNATOR	-	80130C1	0372257
3288	IH 6-CYL. 358	(81-85)	AIR CONDITIONING	-	280210C2	1472238
				-	680614R1	0172235
		(81-85)	FAN TO ALTERNATOR	-	80130C1	0372257
3388	IH 6-CYL. 436	(78-81)	AIR CONDITIONING	-	874097C1	0172211
		(78-81)	FAN TO ALTERNATOR	-	532746R1	1401125

3488	IH 6-CYL. 466	(81-85)	AIR CONDITIONING	-	1250587C1	0272215
				-	242269R2	1272212
		(81-85)	WATER PUMP TO ALTERNATOR	-	532746R1	1401125
3588	IH 6-CYL. 466	(78-81)	AIR CONDITIONING	-	874097C1	0172211
		(78-81)	FAN TO ALTERNATOR	-	532746R1	1401125
3688	IH 6-CYL. 436	(82-85)	AIR CONDITIONING	-	1250587C1	0272215
				-	242269R2	1272212
				-	288202C2	0172214
		(82-85)	FAN TO ALTERNATOR	-	532746R1	1401125
3788	IH 6-CYL. 466	(80-81)	AIR CONDITIONING	-	874097C1	0172211
		(80-81)	FAN TO ALTERNATOR	-	532746R1	1401125
4100	IH 6-CYL. 429	(65-68)	AIR CONDITIONING	-	396472R1	0372258
		(65-68)	FAN	-	390460R1	0302134
4156	IH 6-CYL. 429	(69-70)	AIR CONDITIONING	-	396472R1	0372258
		(69-70)	FAN	-	390460R1	0302134
4166	IH 6-CYL. 436	(72-76)	AIR CONDITIONING	-	65337C2	0172208
		(72-76)	WATER PUMP TO ALTERNATOR	-	532746R1	1401125
4300	IH 6-CYL. 817	(67-70)	GENERATOR	-	173447H1	0172225
4366	IH 6-CYL. 466	(73-76)	AIR CONDITIONING	-	131403C1	0173210
				-	65337C2	0172208
		(73-76)	FAN	-	532746R1	1401125
4386	IH 6-CYL. 466	(76-81)	AIR CONDITIONING	→| SERIAL No. 1499	65337C2	0172208
				|→ SERIAL No. 1500	131403C1	0173210
		(76-81)	FAN	→| SERIAL No. 1499	532746R1	1401125
4568	IH V-8 798	(75-76)	FAN TO WATER PUMP	-	680600C1	1401125
		(75-76)	ALTERNATOR TO AIR CONDITIONING	-	131304C1	0122155
4586	IH V-8 798	(76-81)	FAN TO WATER PUMP	→| SERIAL No. 1500	680600C1	1401125
		(76-81)	ALTERNATOR TO AIR CONDITIONING	-	131304C1	0122155
4786	IH V-8 798	(78-81)	FAN TO WATER PUMP	-	680600C1	1401125
		(78-81)	ALTERNATOR TO AIR CONDITIONING	-	-	0122155
5088	IH 6-CYL. 436	(81-85)	AIR CONDITIONING	-	1250587C1	0272215
		(81-85)	FAN TO ALTERNATOR	— AIR CONDITIONING	532746R1	1401125
5288	IH 6-CYL. 466	(81-85)	AIR CONDITIONING	-	1250587C1	0272215
		(81-85)	FAN TO ALTERNATOR	— AIR CONDITIONING	532746R1	1401125
5488	IH 6-CYL. 466	(81-85)	AIR CONDITIONING	-	1250587C1	0272215
		(81-85)	FAN TO ALTERNATOR	— AIR CONDITIONING	532746R1	1401125
6388	IH 6-CYL. 436	(81-85)	AIR CONDITIONING	-	-	0272215
		(81-85)	FAN TO ALTERNATOR	-	532746R1	1401125
6588	IH 6-CYL. 466	(81-85)	AIR CONDITIONING	-	-	0272215
		(81-85)	FAN TO ALTERNATOR	-	532746R1	1401125
6788	IH 6-CYL. 466	(81-85)	AIR CONDITIONING	-	-	0272215
		(81-85)	FAN TO ALTERNATOR	-	532746R1	1401125
7288	IH 6-CYL. 466	(85)	AIR CONDITIONING	-	164550R2	0172217
		(85)	FAN TO ALTERNATOR	-	537072R91	1401125
7488	IH 6-CYL. 466	(85)	AIR CONDITIONING	-	1250587C1	0272215
100 FARMALL	IH 4-CYL. 123	(54-56)	GENERATOR	SERIAL No. 501 → 65000	52318DA	0172189
		(54-56)	FAN TO GENERATOR	|→ SERIAL No. 65001	367697R1	0173217
100 HYDRO	IH 6-CYL. 436	(73-76)	AIR CONDITIONING	-	65337C2	0172208
		(73-76)	FAN TO ALTERNATOR	-	537072R91	1401125
		(73-76)	WATER PUMP TO ALTERNATOR	-	532746R1	1401125
1026 HYDRO	IH 6-CYL. 407	(69-71)	AIR CONDITIONING	-	-	1472251
		(69-71)	FAN TO ALTERNATOR	-	385120R2	1401129

1026 HYDRO FARMALL	IH 6-CYL. 407	(69-71)	AIR CONDITIONING	-	-	1472251
		(69-71)	FAN TO ALTERNATOR	-	385120R2	1401129
1066 FARMALL	IH 6-CYL. 414	(71-76)	AIR CONDITIONING	-	242270R2	0172208
				-	874097C1	0172211
		(71-76)	FAN TO ALTERNATOR	-	480240C91	0372255
				-	532746R1	1401125
1206 FARMALL	IH 6-CYL. 361	(65-67)	AIR CONDITIONING	-	-	0372280
		(65-67)	FAN TO ALTERNATOR	-	-	1401129
1256 FARMALL	IH 6-CYL. 407	(67-69)	AIR CONDITIONING	-	-	1472251
		(67-69)	FAN TO ALTERNATOR	-	385120R2	1401129
130 FARMALL	IH 4-CYL. 123	(56-58)	GENERATOR	SERIAL No. 501 → 65000	52318DA	0172189
		(56-58)	FAN TO GENERATOR	→ SERIAL No. 65001	367697R1	0173217
140 FARMALL	IH 4-CYL. 123	(58-70)	GENERATOR	SERIAL No. 501 → 65000	52318DA	0172189
		(58-70)	FAN TO GENERATOR	→ SERIAL No. 65001	367697R1	0173217
1456 FARMALL	IH 6-CYL. 407	(69-71)	AIR CONDITIONING	-	-	1472251
		(69-71)	FAN TO ALTERNATOR	-	385120R2	1401129
1466 FARMALL	IH 6-CYL. 436	(71-76)	AIR CONDITIONING	-	242270R2	0172208
				-	874097C1	0172211
		(71-76)	FAN TO ALTERNATOR	-	480240C91	0372255
				-	532746R1	1401125
1468 FARMALL	IH V-8 550	(71-74)	AIR CONDITIONING	-	527621R1	0173230
		(71-74)	FAN	-	427205C91	0372231
		(71-74)	WATER PUMP TO ALTERNATOR	-	236161R2	0273228
186 HYDRO	IH 6-CYL. 436	(76-81)	AIR CONDITIONING	-	874097C1	0172211
		(76-81)	FAN TO ALTERNATOR	+ AIR CONDITIONING	532746R1	1401125
				− AIR CONDITIONING	532746R1	1401125
200 FARMALL	IH 4-CYL. 123	(54-56)	GENERATOR	SERIAL No. 501 → 65000	52318DA	0172189
		(54-56)	FAN TO GENERATOR	→ SERIAL No. 65001	367697R1	0173217
21206 INDUSTRIAL	IH 6-CYL. 361	(65-67)	AIR CONDITIONING	-	-	0372280
		(65-67)	FAN TO ALTERNATOR	-	-	1401129
21256 INDUSTRIAL	IH 6-CYL. 407	(67-69)	AIR CONDITIONING	-	-	1472251
		(67-69)	FAN TO ALTERNATOR	-	385120R2	1401129
230 FARMALL	IH 4-CYL. 123	(56-58)	GENERATOR	SERIAL No. 501 → 65000	52318DA	0172189
		(56-58)	FAN TO GENERATOR	→ SERIAL No. 65001	367697R1	0173217
240 FARMALL	IH 4-CYL. 123	(58-62)	GENERATOR	SERIAL No. 501 → 65000	52318DA	0172189
		(58-62)	FAN TO GENERATOR	→ SERIAL No. 65001	367697R1	0173217
2400A	IH 4-CYL. 157	(70-74)	FAN TO ALTERNATOR	-	523030R2	0173240
	IH 4-CYL. 179	(70-74)	FAN TO ALTERNATOR	-	534310R1	0372255
2400A LO-BOY	IH 4-CYL. 157	(70-74)	FAN TO ALTERNATOR	-	523030R2	0173240
	IH 4-CYL. 179	(70-74)	FAN TO ALTERNATOR	-	534310R1	0372255
2404 INDUSTRIAL	IH 4-CYL. 135	(60-67)	FAN TO GENERATOR	-	403580R1	0173219
2424 INDUSTRIAL	IH 4-CYL. 146	(64-68)	FAN TO GENERATOR	-	403580R1	0173219
2424 LO-BOY INDUSTRIAL	IH 4-CYL. 146	(64-68)	FAN TO GENERATOR	-	403580R1	0173219
2444 INDUSTRIAL	IH 4-CYL. 152	(67-71)	FAN TO ALTERNATOR	-	387920R1	0173219
		(67-71)	FAN TO ALTERNATOR/GENERATOR	-	403580R1	0173219
	IH 4-CYL. 154	(67-71)	ALTERNATOR	-	401691R1	0172201
2444 LO-BOY INDUSTRIAL	IH 4-CYL. 152	(67-71)	FAN TO ALTERNATOR	-	387920R1	0173219
		(67-71)	FAN TO ALTERNATOR/GENERATOR	-	403580R1	0173219
	IH 4-CYL. 154	(67-71)	ALTERNATOR	-	401691R1	0172201

2500A	IH 4-CYL. 200	(70-74)	FAN TO ALTERNATOR/GENERATOR	-	532031R2	1573238
	IH 4-CYL. 239	(70-74)	WATER PUMP TO ALTERNATOR	-	403303R1	0173240
		(70-74)	FAN TO ALTERNATOR/GENERATOR	-	534311R1	1472251
2500A LO-BOY	IH 4-CYL. 200	(70-74)	FAN TO ALTERNATOR/GENERATOR	-	532031R2	1573238
	IH 4-CYL. 239	(70-74)	WATER PUMP TO ALTERNATOR	-	403303R1	0173240
		(70-74)	FAN TO ALTERNATOR/GENERATOR	-	534311R1	1472251
2500B	IH 4-CYL. 200	(74-77)	FAN TO ALTERNATOR	-	532030R2	1473236
	IH 4-CYL. 239	(74-77)	WATER PUMP TO ALTERNATOR	-	403303R1	0173240
		(74-77)	FAN TO ALTERNATOR/GENERATOR	-	534311R1	1472251
2500B LO-BOY	IH 4-CYL. 200	(74-77)	FAN TO ALTERNATOR	-	532030R2	1473236
	IH 4-CYL. 239	(74-77)	WATER PUMP TO ALTERNATOR	-	403303R1	0173240
		(74-77)	FAN TO ALTERNATOR/GENERATOR	-	534311R1	1472251
2544 INDUSTRIAL	IH 4-CYL. 200	(68-73)	FAN TO ALTERNATOR	-	403303R1	0173240
		(68-73)	FAN TO GENERATOR	-	314606C2	0173240
	IH 4-CYL. 239	(68-73)	FAN	-	534311R1	1472251
		(68-73)	FAN TO ALTERNATOR	-	401128R1	0372245
		(68-73)	WATER PUMP TO ALTERNATOR	-	315969R1	1472227
2606 INDUSTRIAL	IH 6-CYL. 236	(62-67)	FAN TO GENERATOR	→| SERIAL No. 13949	316250R1	0422134
				|→ SERIAL No. 13950	382228R1	0172235
2656 INDUSTRIAL	IH 6-CYL. 263	(66-73)	FAN	-	396829R1	0172219
		(66-73)	WATER PUMP TO ALTERNATOR	-	403617R1	0172225
	IH 6-CYL. 281	(66-73)	AIR CONDITIONING	-	395463R1	0172253
		(66-73)	FAN	-	378113R2	1472227
				-	385738R1	0422134
				-	396829R1	0172219
				-	396830R1	0372232
		(66-73)	WATER PUMP TO ALTERNATOR/ GENERATOR	-	-	0422134
2706 INDUSTRIAL	IH 6-CYL. 263	(63-67)	FAN	-	378113R1	1472227
				-	393415R1	0172225
		(63-67)	WATER PUMP TO ALTERNATOR	-	393415R1	0172225
		(63-67)	WATER PUMP TO GENERATOR	-	316250R1	0422134
		(63-67)	WATER PUMP TO ALTERNATOR/ GENERATOR	-	-	0372223
	IH 6-CYL. 282	(63-67)	AIR CONDITIONING	-	395463R1	0172253
570	HERCULES 6-CYL. 298	(58-60)	POWER STEERING	-	Z882	0372240
				-	397397R1	0372272
		(63-67)	FAN	→| SERIAL No. 49663	378113R1	1472227
				|→ SERIAL No. 49664	385674R1	0422134
		(63-67)	WATER PUMP TO ALTERNATOR	-	396543R1	0372257
		(63-67)	WATER PUMP TO ALTERNATOR/ GENERATOR	-	-	0422134
2756 INDUSTRIAL	IH 6-CYL. 291	(69-71)	FAN	-	378113R1	1472227
				-	393415R1	0172225
		(69-71)	WATER PUMP TO ALTERNATOR	-	393415R1	0172225
		(69-71)	WATER PUMP TO GENERATOR	-	316250R1	0422134
		(69-71)	WATER PUMP TO ALTERNATOR/ GENERATOR	-	-	0372223
	IH 6-CYL. 310	(69-71)	AIR CONDITIONING	-	395463R1	0172253
		(69-71)	FAN	-	396543R1	0372257
		(69-71)	WATER PUMP TO ALTERNATOR	-	396543R1	0372257
		(69-71)	WATER PUMP TO ALTERNATOR/ GENERATOR	-	-	0422134

2806 INDUSTRIAL	IH 6-CYL. 301	(63-67)	AIR CONDITIONING	-	395463R1	0172253
		(63-67)	FAN	-	378113R1	1472227
				-	393415R1	0172225
		(63-67)	WATER PUMP TO ALTERNATOR	-	393415R1	0172225
		(63-67)	WATER PUMP TO ALTERNATOR/ GENERATOR	-	-	0372223
	IH 6-CYL. 361	(63-67)	AIR CONDITIONING	-	-	0372280
		(63-67)	FAN TO ALTERNATOR	-	385120R1	1401129
		(63-67)	FAN TO GENERATOR	-	380060R1	1401127
2826 INDUSTRIAL	IH 6-CYL. 358	(69-71)	FAN TO ALTERNATOR	-	530076R1	0372257
2856 INDUSTRIAL	IH 6-CYL. 301	(67-71)	AIR CONDITIONING	-	395463R1	0172253
		(67-71)	FAN	-	403617R1	0172225
	IH 6-CYL. 407	(67-71)	AIR CONDITIONING	-	395462R1	0372280
		(67-71)	FAN TO ALTERNATOR	-	385120R2	1401129
300 FARMALL	IH 4-CYL. 169	(54-56)	GENERATOR	-	362828R1	0372199
	IH 4-CYL. 169 LPG	(54-56)	GENERATOR	-	362828R1	0372199
300 UTILITY	IH 4-CYL. 169	(55-56)	GENERATOR	-	362828R1	0372199
	IH 4-CYL. 169 LPG	(55-56)	GENERATOR	-	362828R1	0372199
340 FARMALL	IH 4-CYL. 135	(58-63)	FAN TO GENERATOR	-	367697R1	0173217
3400A LOADER	IH C175	(72-76)	FAN TO ALTERNATOR	-	532030R2	1473236
	IH D179	(72-76)	FAN TO ALTERNATOR	-	534310R1	0372255
3414 LOADER	IH 4-CYL. 153	(61-67)	ALTERNATOR	-	401691R1	0172201
		(61-67)	FAN	-	48878D	0172195
	IH BC144	(61-67)	ALTERNATOR	-	401691R1	0172201
		(61-67)	FAN	-	48878D	0172195
3444 LOADER	IH 4-CYL. 153	(67-71)	ALTERNATOR	-	401691R1	0172201
		(67-71)	FAN	-	48878D	0172195
	IH BC144	(67-71)	ALTERNATOR	-	401691R1	0172201
		(67-71)	FAN	-	48878D	0172195
350 FARMALL	IH 4-CYL. 175	(56-58)	GENERATOR	-	362828R1	0372199
	IH 4-CYL. 175 LPG	(56-58)	GENERATOR	-	362828R1	0372199
350 UTILITY	CONTINENTAL 4-CYL. 193	(56-58)	GENERATOR	-	362828R1	0372199
	IH 4-CYL. 175	(56-58)	GENERATOR	-	362828R1	0372199
	IH 4-CYL. 175 LPG	(56-58)	GENERATOR	-	362828R1	0372199
3500A LOADER	IH D239	(72-78)	FAN TO ALTERNATOR	-	403303R1	0173240
350D FARMALL	CONTINENTAL 4-CYL. 193	(56-58)	FAN TO GENERATOR	-	143441R2	0172216
3514 LOADER	IH 4-CYL. 153	(65-72)	FAN	-	-	0422134
		(65-72)	WATER PUMP TO GENERATOR	-	151529R1	0173222
	IH 4-CYL. 175	(65-72)	FAN TO ALTERNATOR	-	403303R1	0173240
	IH 4-CYL. 188	(65-72)	FAN	-	385674R1	0422134
		(65-72)	WATER PUMP TO GENERATOR	-	315969R1	1472227
	IH 4-CYL. 239	(65-72)	FAN TO ALTERNATOR	− SYNCRO MESH TRANSMISSION	401128R1	0372245
				+ SYNCRO MESH TRANSMISSION	403303R1	0173240
400 FARMALL	IH 4-CYL. 264	(54-56)	GENERATOR	-	49341D	0172201
				-	52318DA	0172189
	IH 4-CYL. 264 LPG	(54-56)	GENERATOR	-	49341D	0172201
404 FARMALL	IH 4-CYL. 135	(61-67)	FAN TO GENERATOR	-	387920R1	0173219
				-	403580R1	0173219
450 FARMALL	IH 4-CYL. 281	(56-58)	GENERATOR	-	49341D	0172201
	IH 4-CYL. 281 LPG	(56-58)	GENERATOR	-	49341D	0172201

460 FARMALL	IH 6-CYL. 221	(58-63)	FAN TO ALTERNATOR	-	403617R1	0172225
		(58-63)	FAN TO GENERATOR	-	149635R1	0372223
	IH 6-CYL. 236	(58-63)	FAN	-	369290R1	0372223
		(58-63)	GENERATOR	-	316250R1	0422134
		(58-63)	FAN TO GENERATOR	-	385738R1	0422134
		(58-63)	WATER PUMP TO GENERATOR	-	-	0372223
500C	IH D155	(69-74)	FAN	-	676620R1	2501072
				-	676622R1	0173208
		(69-74)	GENERATOR	-	676626R1	0173197
544 FARMALL	IH 4-CYL. 200	(68-73)	FAN TO ALTERNATOR	-	403303R1	0173240
		(68-73)	FAN TO GENERATOR	-	314606C2	0173240
	IH 4-CYL. 239	(68-73)	FAN	-	534311R1	1472251
		(68-73)	FAN TO ALTERNATOR	-	401128R1	0372245
		(68-73)	WATER PUMP TO ALTERNATOR	-	315969R1	1472227
560 FARMALL	IH 6-CYL. 282	(58-63)	FAN	-	403348R1	0372223
		(58-63)	WATER PUMP TO GENERATOR	-	316250R1	0422134
656 FARMALL	IH 6-CYL. 263	(65-72)	AIR CONDITIONING	-	395463R1	0172253
		(65-72)	FAN	-	393415R1	0172225
		(65-72)	WATER PUMP TO ALTERNATOR/ GENERATOR	→I SERIAL No. 23107	332562R1	0372223
	IH 6-CYL. 281	(65-72)	AIR CONDITIONING	-	395463R1	0172253
		(65-72)	FAN	-	403617R1	0172225
		(65-72)	WATER PUMP TO ALTERNATOR/ GENERATOR	-	-	0422134
656 HYDRO FARMALL	IH 6-CYL. 263	(68-73)	AIR CONDITIONING	-	395463R1	0172253
		(68-73)	FAN	-	393415R1	0172225
		(68-73)	WATER PUMP TO ALTERNATOR/ GENERATOR	→I SERIAL No. 23107	332562R1	0372223
	IH 6-CYL. 281	(68-73)	AIR CONDITIONING	-	395463R1	0172253
		(68-73)	FAN	-	403617R1	0172225
		(68-73)	WATER PUMP TO ALTERNATOR/ GENERATOR	-	-	0422134
656H	IH 6-CYL. 263	(67-73)	FAN	-	403348R1	0372223
		(67-73)	WATER PUMP TO ALTERNATOR	-	403617R1	0172225
	IH 6-CYL. 281	(67-73)	AIR CONDITIONING	-	395463R1	0172253
		(67-73)	FAN	-	378113R2	1472227
				-	385738R1	0422134
				-	396829R1	0172219
				-	396830R1	0372232
		(67-73)	WATER PUMP TO ALTERNATOR/ GENERATOR	-	-	0422134
660 TRACTOR	IH 6-CYL. 263	(59-63)	FAN	-	372596R1	1472227
		(59-63)	WATER PUMP TO GENERATOR	-	369290R1	0372223
	IH 6-CYL. 281	(59-63)	FAN	-	372596R1	1472227
		(59-63)	WATER PUMP TO GENERATOR	-	190502R1	0422134
666 FARMALL	IH 6-CYL. 291	(72-76)	FAN	→I SERIAL No. 11050	403617R1	0172225
				I→ SERIAL No. 11051	406097R1	0372244
		(72-76)	WATER PUMP TO ALTERNATOR	-	393415R1	0172225
				-	530186R1	0372257
	IH 6-CYL. 312	(72-76)	FAN	-	393415R1	0172225
70 HYDRO	IH 6-CYL. 291	(73-76)	FAN	→I SERIAL No. 11050	403617R1	0172225
				I→ SERIAL No. 11051	-	0372244
		(73-76)	WATER PUMP TO ALTERNATOR	-	530186R1	0372257
	IH 6-CYL. 312	(73-76)	FAN	-	403617R1	0172225

706 FARMALL	IH 6-CYL. 263	(63-67)	FAN	-	378113R1	1472227
				-	393415R1	0172225
		(63-67)	WATER PUMP TO ALTERNATOR	-	393415R1	0172225
		(63-67)	WATER PUMP TO GENERATOR	-	316250R1	0422134
		(63-67)	WATER PUMP TO ALTERNATOR/ GENERATOR	-	-	0372223
	IH 6-CYL. 282	(63-67)	AIR CONDITIONING	-	395463R1	0172253
				-	397397R1	0372272
		(63-67)	FAN	→I SERIAL No. 49663	378113R1	1472227
				I→ SERIAL No. 49664	385674R1	0422134
		(63-67)	WATER PUMP TO ALTERNATOR	-	396543R1	0372257
		(63-67)	WATER PUMP TO ALTERNATOR/ GENERATOR	-	-	0422134
756 FARMALL	IH 6-CYL. 291	(67-71)	FAN	-	378113R1	1472227
				-	393415R1	0172225
		(67-71)	WATER PUMP TO ALTERNATOR	-	393415R1	0172225
		(67-71)	WATER PUMP TO GENERATOR	-	316250R1	0422134
		(67-71)	WATER PUMP TO ALTERNATOR/ GENERATOR	-	-	0372223
	IH 6-CYL. 310	(67-71)	AIR CONDITIONING	-	395463R1	0172253
		(67-71)	FAN	-	396543R1	0372257
		(67-71)	WATER PUMP TO ALTERNATOR	-	396543R1	0372257
		(67-71)	WATER PUMP TO ALTERNATOR/ GENERATOR	-	-	0422134
766 FARMALL	IH 6-CYL. 291	(71-76)	AIR CONDITIONING	-	242270R2	0172208
		(71-76)	FAN	-	403617R1	0172225
	IH 6-CYL. 360	(71-76)	AIR CONDITIONING	-	242270R2	0172208
		(71-76)	WATER PUMP TO ALTERNATOR	-	532746R1	1401125
806 FARMALL	IH 6-CYL. 301	(63-67)	AIR CONDITIONING	-	395463R1	0172253
		(63-67)	FAN	-	378113R1	1472227
				-	393415R1	0172225
		(63-67)	WATER PUMP TO ALTERNATOR	-	393415R1	0172225
		(63-67)	WATER PUMP TO ALTERNATOR/ GENERATOR	-	-	0372223
	IH 6-CYL. 301 LPG	(63-67)	AIR CONDITIONING	-	395463R1	0172253
		(63-67)	FAN	-	378113R1	1472227
				-	393415R1	0172225
		(63-67)	WATER PUMP TO ALTERNATOR	-	393415R1	0172225
		(63-67)	WATER PUMP TO ALTERNATOR/ GENERATOR	-	-	0372223
	IH 6-CYL. 361	(63-67)	AIR CONDITIONING	-	-	0372280
		(63-67)	FAN TO ALTERNATOR	-	385120R1	1401129
		(63-67)	FAN TO GENERATOR	-	380060R1	1401127
826 FARMALL	IH 6-CYL. 358	(69-71)	FAN TO ALTERNATOR	-	530076R1	0372257
826H	IH 6-CYL. 301	(69-71)	FAN TO ALTERNATOR	-	403617R1	0172225
	IH 6-CYL. 358	(69-71)	FAN TO ALTERNATOR	-	530076R1	0372257
826H FARMALL	IH 6-CYL. 301	(69-71)	FAN TO ALTERNATOR	-	403617R1	0172225
	IH 6-CYL. 358	(69-71)	FAN TO ALTERNATOR	-	530076R1	0372257
84 HYDRO	IH 4-CYL. 246	(78-85)	FAN TO ALTERNATOR	-	527470R1	1472251
856 FARMALL	IH 6-CYL. 301	(67-71)	AIR CONDITIONING	-	395463R1	0172253
		(67-71)	FAN	-	403617R1	0172225
	IH 6-CYL. 407	(67-71)	AIR CONDITIONING	-	395462R1	0372280
		(67-71)	FAN TO ALTERNATOR	-	385120R2	1401129

86 HYDRO	IH 6-CYL. 291	(76-81)	FAN	→I SERIAL No. 11050	403617R1	0172225
				I→ SERIAL No. 11051	-	0372244
		(76-81)	WATER PUMP TO ALTERNATOR	-	530186R1	0372257
	IH 6-CYL. 312	(76-81)	FAN	-	403617R1	0172225
966 FARMALL	IH 6-CYL. 414	(71-76)	AIR CONDITIONING	-	242270R2	0172208
		(71-76)	FAN TO ALTERNATOR	+ DUAL BELTS	537072R1	1401125
				+ SINGLE BELT	532746R1	1401125
		(71-76)	FAN TO WATER PUMP	-	532746R1	1401125
A FARMALL	IH 4-CYL. 113	(39-47)	GENERATOR	+ BOSCH COMPRESSOR	52318DA	0172189
AV FARMALL	IH 4-CYL. 113	(41-47)	GENERATOR	+ BOSCH COMPRESSOR	52318DA	0172189
B FARMALL	IH 4-CYL. 113	(39-47)	GENERATOR	+ BOSCH COMPRESSOR	52318DA	0172189
C FARMALL	IH 4-CYL. 113	(48-51)	GENERATOR	+ BOSCH COMPRESSOR	52318DA	0172189
CUB LO-BOY 154	IH 4-CYL. 60	(68-74)	FAN TO GENERATOR	-	527621R1	0173230
CUB LO-BOY 184	IH 4-CYL. 60	(77-80)	FAN TO GENERATOR	-	527621R1	0173230
CUB LO-BOY 185	IH 4-CYL. 60	(74-76)	FAN TO GENERATOR	-	527621R1	0173230
FARMALL REGULAR	IH 4-CYL. 221	(24-32)	FAN	-	369290R1	0372223
		(24-32)	WATER PUMP	-	304019R1	0422134
H FARMALL	IH 4-CYL. 152	(39-53)	GENERATOR	-	48878D	0172195
HV FARMALL	IH 4-CYL. 152	(42-53)	GENERATOR	-	48878D	0172195
I-6 MCCORMICK-DEERING	IH 4-CYL. 248	(40-53)	GENERATOR	+ BOSCH COMPRESSOR	54857DB	0372193
				+ DELCO COMPRESSOR	49341D	0172201
I-9 MCCORMICK-DEERING	IH 4-CYL. 335	(40-53)	GENERATOR	-	54867D	0372203
ID-6 MCCORMICK-DEERING	IH 4-CYL. 248	(40-53)	GENERATOR	+ BOSCH COMPRESSOR	54857DB	0372193
				+ DELCO COMPRESSOR	52318DA	0172189
ID-9 MCCORMICK-DEERING	IH 4-CYL. 335	(40-53)	GENERATOR	+ BOSCH COMPRESSOR	54857DB	0372193
				+ DELCO COMPRESSOR	52318DA	0172189
M FARMALL	IH 4-CYL. 248	(39-52)	GENERATOR	+ BOSCH COMPRESSOR	54867D	0372203
				+ DELCO COMPRESSOR	49341D	0172201
MD FARMALL	IH 4-CYL. 248	(41-52)	GENERATOR	+ BOSCH COMPRESSOR	54857DB	0372193
				+ DELCO COMPRESSOR	52318DA	0172189
MDV FARMALL	IH 4-CYL. 248	(41-52)	GENERATOR	+ BOSCH COMPRESSOR	54857DB	0372193
				+ DELCO COMPRESSOR	52318DA	0172189
MV FARMALL	IH 4-CYL. 248	(39-52)	GENERATOR	+ BOSCH COMPRESSOR	54867D	0372203
				+ DELCO COMPRESSOR	49341D	0172201
O-4 MCCORMICK	IH 4-CYL. 152	(40-53)	GENERATOR	-	-	0172195
O-6 MCCORMICK	IH 4-CYL. 248	(40-53)	GENERATOR	+ BOSCH COMPRESSOR	54867D	0372203
				+ DELCO COMPRESSOR	49341D	0172201
OS-4 MCCORMICK	IH 4-CYL. 152	(44-53)	GENERATOR	-	-	0172195
OS-6 MCCORMICK	IH 4-CYL. 248	(44-53)	GENERATOR	+ BOSCH COMPRESSOR	54867D	0372203
				+ DELCO COMPRESSOR	49341D	0172201
SUPER A FARMALL	IH 4-CYL. 113	(47-54)	GENERATOR	+ BOSCH COMPRESSOR	52318DA	0172189
SUPER A1 FARMALL	IH 4-CYL. 113	(47-54)	GENERATOR	+ BOSCH COMPRESSOR	52318DA	0172189
SUPER C FARMALL	IH 4-CYL. 123	(51-54)	GENERATOR	+ BOSCH COMPRESSOR	52318DA	0172189
SUPER H FARMALL	IH 4-CYL. 164	(52-54)	GENERATOR	-	48878D	0172195
SUPER HV FARMALL	IH 4-CYL. 164	(52-54)	GENERATOR	-	48878D	0172195

SUPER M FARMALL	IH 4-CYL. 264	(52-54)	GENERATOR	+ BOSCH COMPRESSOR	54867D	0372203
				+ DELCO COMPRESSOR	49341D	0172201
	IH 4-CYL. 264 LPG	(52-54)	GENERATOR	+ BOSCH COMPRESSOR	54867D	0372203
				+ DELCO COMPRESSOR	49341D	0172201
SUPER MD FARMALL	IH 4-CYL. 264	(52-54)	GENERATOR	+ BOSCH COMPRESSOR	54857DB	0372193
				+ DELCO COMPRESSOR	52318DA	0172189
SUPER M-TA FARMALL	IH 4-CYL. 264	(54)	GENERATOR	-	49341D	0172201
	IH 4-CYL. 264 LPG	(54)	GENERATOR	-	49341D	0172201
SUPER MV-TA FARMALL	IH 4-CYL. 264	(54-55)	GENERATOR	-	49341D	0172201
	IH 4-CYL. 264 LPG	(54-55)	GENERATOR	-	49341D	0172201
SUPER W-4 MCCORMICK	IH 4-CYL. 164	(53-54)	GENERATOR	-	48878D	0172195
SUPER W-6 MCCORMICK	IH 4-CYL. 264	(52-54)	GENERATOR	+ BOSCH COMPRESSOR	54867D	0372203
				+ DELCO COMPRESSOR	49341D	0172201
SUPER W-6TA MCCORMICK	IH 4-CYL. 264	(54)	GENERATOR	-	49341D	0172201
SUPER WD-6 MCCORMICK	IH 4-CYL. 264	(52-54)	GENERATOR	+ BOSCH COMPRESSOR	52318DA	0172189
				+ DELCO COMPRESSOR	54857DB	0372193
SUPER WD-9 MCCORMICK	IH 4-CYL. 350	(53-56)	GENERATOR	+ BOSCH COMPRESSOR	52318DA	0172189
				+ DELCO COMPRESSOR	54857DB	0372193
		(53-56)	WATER PUMP TO HYDRAULIC PUMP	-	363599R1	1102110
T14	IH 4-CYL. 460	(40-50)	GENERATOR	-	54857DB	0372193
T18	IH 4-CYL. 221	(38-49)	FAN	-	32542D	0902122
T340	IH 4-CYL. 135	(58-64)	FAN TO GENERATOR	-	225532R1	0173220
				-	367697R1	0173217
				-	610380C1	0173218
T4	IH 4-CYL. 123	(59-60)	FAN TO GENERATOR	-	367697R1	0173217
T5	IH 4-CYL. 135	(59-60)	FAN TO GENERATOR	-	367697R1	0173217
T6	IH 4-CYL. 248	(40-56)	GENERATOR	-	49341D	0172201
T6 61 SERIES	IH 4-CYL. 264	(56-59)	GENERATOR	-	54867D	0372203
T6 62 SERIES	IH 4-CYL. 263	(59-69)	FAN	-	306632R1	2602103
		(59-69)	WATER PUMP TO GENERATOR	-	306910R1	0101099
T9	IH 4-CYL. 334	(40-56)	GENERATOR	+ BOSCH COMPRESSOR	54857DB	0372193
				+ DELCO COMPRESSOR	54867D	0372203
TD12	IH 6-CYL. 466	(81-94)	FAN TO ALTERNATOR	-	-	1401129
TD14	IH 4-CYL. 460	(39-58)	GENERATOR	-	54857DB	0372193
TD14A	IH 4-CYL. 460	(39-58)	GENERATOR	-	61284D	0372197
TD15	IH 6-CYL. 534	(58-66)	FAN TO ALTERNATOR	-	-	1401129
TD15C	IH DT466B	(72-90)	FAN TO ALTERNATOR	-	673481C1	1401125
TD18	IH 6-CYL. 691	(38-49)	FAN TO GENERATOR	-	274478R11	0202139
TD18 182 SERIES	IH 6-CYL. 691	(56-58)	FAN TO GENERATOR	-	274478R11	0202139
TD18A	IH 6-CYL. 691	(49-55)	FAN TO GENERATOR	⟼ SERIAL No. 15000 ; + 9 1/2" C.S. PULLEY	258275R21	1402127
TD20	IH D691	(58-62)	FAN TO GENERATOR	SERIAL No. 3001 → 3145	274478R11	0202139
	IH DT429	(58-62)	FAN TO GENERATOR	SERIAL No. 3001 → 3145	274478R11	0202139
	IH DVT573B	(58-62)	FAN TO GENERATOR	SERIAL No. 3001 → 3145	274478R11	0202139
TD20-200	IH D691	(58-61)	FAN TO GENERATOR	SERIAL No. 3001 → 3145	274478R11	0202139
	IH DT429	(58-61)	FAN TO GENERATOR	SERIAL No. 3001 → 3145	274478R11	0202139
	IH DVT573B	(58-61)	FAN TO GENERATOR	SERIAL No. 3001 → 3145	274478R11	0202139
TD20-201	IH D691	(61-63)	FAN TO GENERATOR	SERIAL No. 3001 → 3145	274478R11	0202139
	IH DT429	(61-63)	FAN TO GENERATOR	SERIAL No. 3001 → 3145	274478R11	0202139
	IH DVT573B	(61-63)	FAN TO GENERATOR	SERIAL No. 3001 → 3145	274478R11	0202139

TD20B	IH DT429	(63-70)	FAN TO ALTERNATOR	-	670741C1	1401110
		(63-70)	WATER PUMP	-	328502R1	0701095
		(63-70)	FAN TO GENERATOR	-	326998R1	1401110
TD20C	IH DV573B	(70-75)	ALTERNATOR	I→ SERIAL No. 7500	673947C1	0172220
TD25	IH DT817	(59-62)	GENERATOR	-	323987R1	0172225
		(59-62)	FAN TO GENERATOR	-	310081R2	1472227
TD25B	IH DT817	(62-72)	ALTERNATOR	-	670464C1	0201112
		(62-72)	GENERATOR	-	403348R1	0372223
TD25C	IH DT817	(68-78)	ALTERNATOR	-	670582C1	1401101
		(68-78)	FAN	-	688192C91	0201152
TD30	IH DT817	(62-67)	FAN TO GENERATOR	-	323987R1	0172225
TD340	IH 4-CYL. 166	(58-64)	FAN TO GENERATOR	-	315969R1	1472227
TD5	IH 4-CYL. 144	(59-60)	GENERATOR	-	704449R1	0172195
TD6	IH 4-CYL. 248	(40-56)	GENERATOR	→I SERIAL No. 32570	54857DB	0372193
				I→ SERIAL No. 32571	52318DA	0172189
TD6 61 SERIES	IH 4-CYL. 264	(56-59)	GENERATOR	→I SERIAL No. 40271	49341D	0172201
				I→ SERIAL No. 40272	-	0372197
TD6 62 SERIES	IH 6-CYL. 282	(59-69)	FAN	− OUTBOARD TYPE	306632R1	2602103
TD7E	IH 4-CYL. 239	(74-88)	FAN TO ALTERNATOR	-	621770C1	0372242
TD8E	IH 4-CYL. 239	(74-87)	FAN TO ALTERNATOR	-	621770C1	0372242
TD9	IH 4-CYL. 350	(56-62)	ALTERNATOR	-	670572C1	0201096
		(56-62)	GENERATOR	-	52318DA	0172189
				-	54857DB	0372193
TD9B	IH 6-CYL. 282	(62-74)	ALTERNATOR	-	670572C1	0201096
		(62-74)	FAN	+ MAN. TRANSMISSION	328540R1	0202113
				+ POWER SHIFT TRANSMISSION	328539R1	0902122
W-14 MCCORMICK-DEERING	IH 4-CYL. 113	(38-39)	GENERATOR	-	61284D	0372197
W-4 MCCORMICK	IH 4-CYL. 152	(40-53)	GENERATOR	-	61284D	0372197
W-400	IH 4-CYL. 264	(55-56)	GENERATOR	-	49341D	0172201
				-	52318DA	0172189
	IH 4-CYL. 264 LPG	(55-56)	GENERATOR	-	49341D	0172201
W-450	IH 4-CYL. 281	(56-58)	GENERATOR	-	49341D	0172201
				-	52318DA	0172189
	IH 4-CYL. 281 LPG	(56-58)	GENERATOR	-	49341D	0172201
W-6 MCCORMICK	IH 4-CYL. 248	(40-53)	GENERATOR	+ BOSCH COMPRESSOR	54867D	0372203
				+ DELCO COMPRESSOR	49341D	0172201
W-9 MCCORMICK-DEERING	IH 4-CYL. 335	(40-53)	GENERATOR	-	54867D	0372203
WD-6 MCCORMICK	IH 4-CYL. 248	(40-53)	GENERATOR	+ BOSCH COMPRESSOR	52318DA	0172189
				+ DELCO COMPRESSOR	54857DB	0372193
WD-9 MCCORMICK-DEERING	IH 4-CYL. 335	(40-53)	GENERATOR	+ BOSCH COMPRESSOR; →I SERIAL No. 501	54857DB	0372193
				+ BOSCH COMPRESSOR; I→ SERIAL No. 502	52318DA	0172189
				+ DELCO COMPRESSOR	54857DB	0372193
WDR-9 MCCORMICK-DEERING	IH 4-CYL. 335	(45-53)	GENERATOR	-	52318DA	0172189

WR-9 MCCORMICK-DEERING	IH 4-CYL. 335	(40-53)	GENERATOR	-	54867D	0372203
	IH 4-CYL. 335 DISTILLATE	(40-53)	GENERATOR	-	54867D	0372203
JCB						
FASTRAC 8250	CUMMINS 6-CYL. 8.3 L	(07-08)	AIR CONDITIONING	-	-	0272210
		(07-08)	SERPENTINE	-	3289746	1185310
JOHN DEERE						
40	JOHN DEERE 2-CYL. 101	(53-55)	FAN	-	M1900T	0173206
		(53-55)	GENERATOR	-	M1862T	0173186
50	JOHN DEERE 2-CYL. 190	(52-56)	WATER PUMP TO GENERATOR	→I SERIAL No. 5016057	B2893R	1272212
				I→ SERIAL No. 5016058	B3288R	0173214
	JOHN DEERE 2-CYL. 190 LPG	(52-56)	WATER PUMP TO GENERATOR	→I SERIAL No. 5016057	B2893R	1272212
				I→ SERIAL No. 5016058	B3288R	0173214
60	JOHN DEERE 2-CYL. 321	(52-56)	WATER PUMP TO GENERATOR	→I SERIAL No. 602999	A4287R	0372223
				I→ SERIAL No. 603000	A4897R	0173223
	JOHN DEERE 2-CYL. 321 LPG	(52-56)	WATER PUMP TO GENERATOR	→I SERIAL No. 602999	A4287R	0372223
				I→ SERIAL No. 603000	A4897R	0173223
70	JOHN DEERE 2-CYL. 376	(53-56)	WATER PUMP TO GENERATOR	→I SERIAL No. 7008099	A4287R	0372223
				I→ SERIAL No. 7008100	A4897R	0173223
	JOHN DEERE 2-CYL. 380	(53-56)	WATER PUMP TO GENERATOR	→I SERIAL No. 7008099	A4287R	0372223
				I→ SERIAL No. 7008100	A4897R	0173223
	JOHN DEERE 2-CYL. 380 LPG	(53-56)	WATER PUMP TO GENERATOR	→I SERIAL No. 7008099	A4287R	0372223
				I→ SERIAL No. 7008100	A4897R	0173223
80	JOHN DEERE 2-CYL. 472	(55-56)	FAN TO GENERATOR	-	R1561R	0173240
301	JOHN DEERE 3-CYL. 135	(71-74)	FAN TO ALTERNATOR	-	T20334T	0201092
	JOHN DEERE 3-CYL. 152	(74-75)	FAN TO ALTERNATOR	-	T20334T	0201092
320	JOHN DEERE 2-CYL. 101	(56-58)	FAN	-	M1900T	0173206
		(56-58)	GENERATOR	-	M1862T	0173186
350	JOHN DEERE 3-CYL. 152	(64-70)	FAN TO ALTERNATOR	-	T20161	0201096
				-	T24757	1901098
420	JOHN DEERE 2-CYL. 113	(56-58)	DECK	-	M140021	0204221
		(56-58)	GENERATOR	-	M1862T	0173186
		(56-58)	POWER STEERING	SERIAL No. 131818 → 158074	T10552T	0173197
				I→ SERIAL No. 158075	T12267T	0573202
	JOHN DEERE 2-CYL. 113 LPG	(56-58)	DECK	-	M140021	0204221
		(56-58)	GENERATOR	-	M1862T	0173186
		(56-58)	POWER STEERING	SERIAL No. 131818 → 158074	T10552T	0173197
				I→ SERIAL No. 158075	T12267T	0573202
430	JOHN DEERE 2-CYL. 113	(58-60)	DECK	-	M140021	0204221
		(58-60)	GENERATOR	-	M1862T	0173186
		(58-60)	POWER STEERING	SERIAL No. 131818 → 158074	T10552T	0173197
				I→ SERIAL No. 158075	T12267T	0573202
	JOHN DEERE 2-CYL. 113 LPG	(58-60)	DECK	-	M140021	0204221
		(58-60)	GENERATOR	-	M1862T	0173186
		(58-60)	POWER STEERING	SERIAL No. 131818 → 158074	T10552T	0173197
				I→ SERIAL No. 158075	T12267T	0573202
435	GM 2-CYL. 106	(59-60)	FAN	-	5124814	0373178
		(59-60)	WATER PUMP TO GENERATOR	-	5124512	0373221

440	GM 2-CYL. 106	(58-60)	FAN	-	5124814	0373178
		(58-60)	POWER STEERING	-	-	0173194
		(58-60)	WATER PUMP TO GENERATOR	→| SERIAL No. 450782	5121847	1473203
				|→ SERIAL No. 450783	5124512	0373221
	JOHN DEERE 2-CYL. 113	(58-60)	GENERATOR	-	M1862T	0173186
		(58-60)	POWER STEERING	→| SERIAL No. 455701	T10552T	0173197
				|→ SERIAL No. 455702	T12267T	0573202
450	JOHN DEERE 4-CYL. 180	(64-70)	FAN TO ALTERNATOR	-	T20161	0201096
				-	T24757	1901098
	JOHN DEERE 4-CYL. 202	(64-70)	FAN	→| SERIAL No. 13560	T20161	0201096
				|→ SERIAL No. 15485	T24757	1901098
		(64-70)	FAN TO ALTERNATOR	-	T20161	0201096
				-	T24757	1901098
520	JOHN DEERE 2-CYL. 190	(56-58)	WATER PUMP TO GENERATOR	-	B3288R	0173214
	JOHN DEERE 2-CYL. 190 LPG	(56-58)	WATER PUMP TO GENERATOR	-	B3288R	0173214
530	JOHN DEERE 2-CYL. 190	(58-60)	WATER PUMP TO GENERATOR	-	B3288R	0173214
	JOHN DEERE 2-CYL. 190 LPG	(58-60)	WATER PUMP TO GENERATOR	-	B3288R	0173214
620	JOHN DEERE 2-CYL. 303	(56-58)	WATER PUMP TO GENERATOR	-	A4897R	0173223
	JOHN DEERE 2-CYL. 303 LPG	(56-58)	WATER PUMP TO GENERATOR	-	A4897R	0173223
630	JOHN DEERE 2-CYL. 303	(58-60)	WATER PUMP TO GENERATOR	-	A4897R	0173223
	JOHN DEERE 2-CYL. 303 LPG	(58-60)	WATER PUMP TO GENERATOR	-	A4897R	0173223
650	YANMAR 2-CYL. 52	(81-89)	FAN TO ALTERNATOR	-	CH15509	0372204
655	YANMAR 3-CYL. 40	(86-90)	FAN TO ALTERNATOR	-	M800313	1473203
670	YANMAR 3-CYL. 54	(89-97)	FAN TO ALTERNATOR	-	M811284	0173207
720	JOHN DEERE 2-CYL. 361	(56-58)	WATER PUMP TO GENERATOR	-	A4897R	0173223
	JOHN DEERE 2-CYL. 361 LPG	(56-58)	WATER PUMP TO GENERATOR	-	A4897R	0173223
	JOHN DEERE 2-CYL. 376	(56-58)	WATER PUMP TO GENERATOR	-	A4897R	0173223
730	JOHN DEERE 2-CYL. 361	(58-61)	WATER PUMP TO GENERATOR	-	A4897R	0173223
	JOHN DEERE 2-CYL. 361 LPG	(58-61)	WATER PUMP TO GENERATOR	-	A4897R	0173223
	JOHN DEERE 2-CYL. 376	(58-61)	WATER PUMP TO GENERATOR	-	A4897R	0173223
750	YANMAR 3-CYL. 78	(81-89)	FAN TO ALTERNATOR	-	CH15509	0372204
755	YANMAR 3-CYL. 54	(86-99)	DECK	-	M140021	0204221
		(86-99)	FAN TO ALTERNATOR	-	M800313	1473203
770	YANMAR 3-CYL. 83	(89-97)	FAN TO ALTERNATOR	-	-	0172214
				-	M808685	0172214
790	YANMAR 3-CYL. 81	(98)	FAN TO ALTERNATOR	-	-	0172214
	YANMAR 3-CYL. 91	(99-05)	FAN TO ALTERNATOR	-	-	0172214
				-	M801821	0272210
820	JOHN DEERE 2-CYL. 472	(56-58)	FAN TO ALTERNATOR/GENERATOR	|→ SERIAL No. 75345	T20334	0201092
	JOHN DEERE 3-CYL. 152	(68-75)	FAN TO ALTERNATOR/GENERATOR	|→ SERIAL No. 75345	T20334	0201092
830	JOHN DEERE 3-CYL. 152	(74-75)	FAN TO ALTERNATOR	-	T20334	0201092
		(74-75)	FAN TO GENERATOR	-	R1561R	0173240
840	JOHN DEERE 2-CYL. 472	(58-60)	FAN TO GENERATOR	→| SERIAL No. 8400199	R1561R	0173240
				|→ SERIAL No. 8400200	R21525R	0173240
850	YANMAR 3-CYL. 78	(78-89)	FAN TO ALTERNATOR	→| SERIAL No. 007760	-	0172208
				|→ SERIAL No. 007761	CH14022	1272212
855	YANMAR 3-CYL. 61	(86-99)	DECK	-	M140021	0204221
		(86-99)	FAN TO ALTERNATOR	-	M805441	0172208
870	YANMAR 3-CYL. 87	(89-97)	FAN TO ALTERNATOR	-	-	0172214
				-	M808685	0172214
950	YANMAR 3-CYL. 105	(78-89)	FAN TO ALTERNATOR	→| SERIAL No. 010859	CH10367	0172208
				|→ SERIAL No. 010860	CH12865	0172214

955	YANMAR 3-CYL. 87	(90-99)	FAN TO ALTERNATOR	-	M805011	0172208
970	YANMAR 4-CYL. 111	(89-98)	FAN TO ALTERNATOR	-	M808685	0172214
990	YANMAR 4-CYL. 121	(00-08)	FAN	-	M808685	0172214
1010	JOHN DEERE 4-CYL. 115	(60-65)	FAN TO GENERATOR	-	T11961T	0373221
	JOHN DEERE 4-CYL. 145	(60-65)	FAN TO GENERATOR	-	T12530T	0173222
1020	JOHN DEERE 3-CYL. 135	(65-73)	FAN TO ALTERNATOR	-	T20334T	0201092
	JOHN DEERE 3-CYL. 152	(65-73)	FAN TO ALTERNATOR	-	T20334T	0201092
1050	YANMAR 3-CYL. 105	(80-87)	FAN TO ALTERNATOR	-	CH12865	0172214
				-	M808685	0172214
1070	YANMAR 4-CYL. 116	(89-98)	FAN TO ALTERNATOR	-	M808685	0172214
1120	JOHN DEERE 3-CYL. 135	(73)	FAN TO ALTERNATOR	-	-	0173199
1250	YANMAR 3-CYL. 143	(82-89)	FAN TO ALTERNATOR	-	CH16856	0172225
1450	YANMAR 4-CYL. 190	(84-88)	FAN TO ALTERNATOR	-	CH16856	0172225
1520	JOHN DEERE 3-CYL. 165	(68-73)	FAN TO ALTERNATOR	-	T20334T	0201092
1530	JOHN DEERE 3-CYL. 164	(74-75)	FAN TO ALTERNATOR	+ MOTOROLA ALTERNATOR	T20334	0201092
1650	YANMAR 4-CYL. 190	(84-88)	FAN TO ALTERNATOR	-	-	1472236
2010	JOHN DEERE 4-CYL. 145	(60-65)	FAN TO GENERATOR	-	T626T	0173225
	JOHN DEERE 4-CYL. 165	(60-65)	FAN TO GENERATOR	-	T626T	0173225
2020	JOHN DEERE 4-CYL. 180	(65-71)	FAN TO ALTERNATOR	-	T20334T	0201092
	JOHN DEERE 4-CYL. 203	(65-71)	FAN TO ALTERNATOR	-	T20334T	0201092
2030	JOHN DEERE 4-CYL. 219	(72-75)	FAN TO ALTERNATOR	-	T20334	0201092
2040	JOHN DEERE 3-CYL. 164	(76-79)	FAN TO ALTERNATOR	→I SERIAL No. 349999	T20334	0201092
	JOHN DEERE 3-CYL. 179	(80-82)	FAN TO ALTERNATOR	→I SERIAL No. 349999	T20334	0201092
2150	JOHN DEERE 3-CYL. 179	(83-86)	FAN TO ALTERNATOR	-	R73784	2787265
2155	JOHN DEERE 3-CYL. 179	(87-92)	FAN TO ALTERNATOR	-	R73784	2787265
				-	R97939	1401101
				-	R97940	0201102
2210	YANMAR 3-CYL. 61	(03-07)	FAN	-	M811285	0173208
2240	JOHN DEERE 3-CYL. 179	(76-82)	FAN TO ALTERNATOR	→I SERIAL No. 349999	T20334	0201092
2255	JOHN DEERE 3-CYL. 179	(83-87)	FAN TO ALTERNATOR	-	R73784	2787265
2320	YANMAR 3-CYL. 68	(08)	FAN	-	M805441	0172208
2350	JOHN DEERE 4-CYL. 239	(83-86)	AIR CONDITIONING	-	-	1699317
		(83-86)	FAN TO ALTERNATOR	-	R73784	2787265
2355	JOHN DEERE 4-CYL. 239	(87-92)	AIR CONDITIONING	-	L59206	0372268
		(87-92)	FAN TO ALTERNATOR	− VISCOUS FAN	R87154	0201108
				+ VISCOUS FAN	R87153	2601106
2440	JOHN DEERE 4-CYL. 219	(76-82)	FAN TO ALTERNATOR	-	T20334	0201092
2520	YANMAR 3-CYL. 81	(06-08)	FAN	-	M801821	0272210
2550	JOHN DEERE 4-CYL. 239	(83-86)	AIR CONDITIONING	-	L41331	1699317
		(83-86)	FAN TO ALTERNATOR	-	R73784	2787265
2555	JOHN DEERE 4-CYL. 239	(87-92)	AIR CONDITIONING	-	L59206	0372268
		(87-92)	FAN TO ALTERNATOR	− VISCOUS FAN	R87154	0201108
				+ VISCOUS FAN	R87153	2601106
2750	JOHN DEERE 4-CYL. 239	(83-86)	AIR CONDITIONING	-	L41330	0372262
		(83-86)	FAN TO ALTERNATOR	-	R73784	2787265
2755	JOHN DEERE 4-CYL. 239	(87-92)	AIR CONDITIONING	-	L59206	0372268
		(87-92)	FAN TO ALTERNATOR	− VISCOUS FAN	R87154	0201108
				+ VISCOUS FAN	R87153	2601106
2840	JOHN DEERE 6-CYL. 329	(77-79)	FAN TO ALTERNATOR	-	N150864	0101105
2950	JOHN DEERE 6-CYL. 359	(83-87)	AIR CONDITIONING	-	L41330	0372262
2955	JOHN DEERE 6-CYL. 359	(87-92)	AIR CONDITIONING	-	L41330	0372262
		(87-92)	FAN TO ALTERNATOR	-	R87152	0301118

3010	JOHN DEERE 4-CYL. 201	(61-63)	FAN TO ALTERNATOR	-	R41627	0372242
		(61-63)	FAN TO GENERATOR	-	R26606R	0372240
	JOHN DEERE 4-CYL. 201 LPG	(61-63)	FAN TO ALTERNATOR	-	R41627	0372242
		(61-63)	FAN TO GENERATOR	-	R26606R	0372240
	JOHN DEERE 4-CYL. 254	(61-63)	FAN TO ALTERNATOR	-	R41628	0372244
		(61-63)	FAN TO GENERATOR	-	R26607R	0372242
3020	JOHN DEERE 4-CYL. 227	(64-69)	FAN TO ALTERNATOR	-	R41627	0372242
		(64-69)	FAN TO GENERATOR	-	R26606R	0372240
	JOHN DEERE 4-CYL. 227 LPG	(64-69)	FAN TO ALTERNATOR	-	R41627	0372242
		(64-69)	FAN TO GENERATOR	-	R26606R	0372240
	JOHN DEERE 4-CYL. 241	(70-72)	FAN TO ALTERNATOR	-	R41627	0372242
		(70-72)	FAN TO GENERATOR	-	R26606R	0372240
	JOHN DEERE 4-CYL. 241 LPG	(70-72)	FAN TO ALTERNATOR	-	R41627	0372242
		(70-72)	FAN TO GENERATOR	-	R26606R	0372240
	JOHN DEERE 4-CYL. 270	(64-72)	FAN TO ALTERNATOR	-	R41628	0372244
		(64-72)	FAN TO GENERATOR	-	R26607R	0372242
3055	JOHN DEERE 6-CYL. 359	(91-93)	AIR CONDITIONING	-	L59206	0372268
		(91-93)	FAN TO ALTERNATOR	-	R87152	0301118
3120	YANMAR 3-CYL. 91	(08)	FAN	-	LVU11661	0272215
3150	JOHN DEERE 6-CYL. 359	(85-87)	AIR CONDITIONING	-	L41330	0372262
		(85-87)	FAN TO ALTERNATOR	-	R82174	1401110
3155	JOHN DEERE 6-CYL. 359	(87-91)	AIR CONDITIONING	→| SERIAL No. 663473	L41330	0372262
				|→ SERIAL No. 663474	L59206	0372268
3203	YANMAR 3-CYL. 92	(06-08)	FAN	-	LVU11661	0272215
3255	JOHN DEERE 6-CYL. 359	(92-93)	AIR CONDITIONING	-	L59206	0372268
3320	YANMAR 3-CYL. 100	(07-08)	FAN	-	LVU11661	0272215
3520	YANMAR 3-CYL. 91	(08)	FAN	-	LVU11661	0272215
4000	JOHN DEERE 6-CYL. 404	(69-72)	AIR CONDITIONING	-	46098	0272215
		(69-72)	FAN TO ALTERNATOR	+ AIR CONDITIONING	R46570	0122155
				− AIR CONDITIONING	-	0372244
		(69-72)	FAN TO GENERATOR	-	R26607R	0372242
4010	YANMAR 3-CYL. 47	(05-06)	FAN	-	M800347	0173207
				-	M802674	0173207
				-	M811285	0173208
				-	R41681	0372242
4020	JOHN DEERE 6-CYL. 404	(64-72)	AIR CONDITIONING	-	46098	0272215
		(64-72)	FAN TO ALTERNATOR	+ AIR CONDITIONING	R46570	0122155
				− AIR CONDITIONING	-	0372244
		(64-72)	FAN TO GENERATOR	-	R26607R	0372242
4030	JOHN DEERE 6-CYL. 303	(73-77)	AIR CONDITIONING	-	R53258	0372268
		(73-77)	FAN TO ALTERNATOR	-	R41628	0372244
	JOHN DEERE 6-CYL. 329	(73-77)	AIR CONDITIONING	→| SERIAL No. 007171	R53258	0372268
		(73-77)	FAN TO ALTERNATOR	-	R41628	0372244
				-	R46113	0272247
4040	JOHN DEERE 6-CYL. 404	(78-82)	AIR CONDITIONING	-	R71603	0172214
		(78-82)	FAN TO ALTERNATOR	-	R52603	0372255
4050	JOHN DEERE 6-CYL. 359	(87-88)	AIR CONDITIONING	-	B2893R	1272212
		(87-88)	FAN TO ALTERNATOR	-	H79235	0272247
				-	T26755	0372244
	JOHN DEERE 6-CYL. 466	(83-86)	AIR CONDITIONING	-	B2893R	1272212
		(83-86)	FAN TO ALTERNATOR	-	H79235	0272247
				-	T26755	0372244

4055	JOHN DEERE 6-CYL. 466	(89-92)	AIR CONDITIONING	-	R73189	0272218
		(89-92)	FAN TO ALTERNATOR	-	RE29018	0372260
4100	YANMAR 3-CYL. 61	(97-03)	FAN	-	M802674	0173207
4110	YANMAR 3-CYL. 61	(02-06)	FAN	-	M800347	0173207
				-	M802674	0173207
				-	M811285	0173208
4115	YANMAR 3-CYL. 73	(02-06)	FAN TO ALTERNATOR	-	RG60467	0384334
4120	JOHN DEERE 4-CYL. 149	(04-08)	FAN TO ALTERNATOR	-	R515222	0384336
4200	YANMAR 3-CYL. 73	(98-03)	FAN	-	-	0272210
4230	JOHN DEERE 6-CYL. 362	(73-77)	AIR CONDITIONING	-	R46098	0272215
		(73-77)	FAN TO ALTERNATOR	-	R41681	0372242
	JOHN DEERE 6-CYL. 404	(73-77)	AIR CONDITIONING	-	R46098	0272215
		(73-77)	FAN TO ALTERNATOR	-	R52603	0372255
				-	R52604	0372257
4240	JOHN DEERE 6-CYL. 466	(78-82)	AIR CONDITIONING	-	R63900	0172217
		(78-82)	FAN TO ALTERNATOR	-	AR74662	0372260
4250	JOHN DEERE 6-CYL. 466	(83-88)	AIR CONDITIONING	-	R73189	0272218
		(83-88)	FAN TO ALTERNATOR	-	RE29018	0372260
4255	JOHN DEERE 6-CYL. 466	(89-92)	AIR CONDITIONING	-	R73189	0272218
		(89-92)	FAN TO ALTERNATOR	-	RE29018	0372260
4300	YANMAR 3-CYL. 91	(98-03)	FAN	-	-	0172214
4310	YANMAR 3-CYL. 91	(02-05)	FAN TO ALTERNATOR	+ 40A. ALTERNATOR	LVU11661	0272215
4320	JOHN DEERE 4-CYL. 149	(05-08)	FAN TO ALTERNATOR	-	R515222	0384336
	JOHN DEERE 6-CYL. 404	(71-72)	FAN TO ALTERNATOR	+ AIR CONDITIONING	-	0173253
				− AIR CONDITIONING	AR43219	0122155
4400	YANMAR 3-CYL. 101	(98-03)	FAN	-	-	0272215
4410	YANMAR 3-CYL. 101	(02-06)	FAN TO ALTERNATOR	+ 40A. ALTERNATOR	LVU11661	0272215
4430	JOHN DEERE 6-CYL. 404	(73-77)	AIR CONDITIONING	-	R46098	0272215
		(73-77)	FAN TO ALTERNATOR	+ AIR CONDITIONING	AR57266	0372255
				− AIR CONDITIONING	AR54592	0372255
4440	JOHN DEERE 6-CYL. 466	(78-82)	AIR CONDITIONING	-	R63900	0172217
		(78-82)	FAN TO ALTERNATOR	-	AR74662	0372260
4450	JOHN DEERE 6-CYL. 466	(83-88)	AIR CONDITIONING	-	R73189	0272218
		(83-88)	FAN TO ALTERNATOR	-	RE29018	0372260
4455	JOHN DEERE 6-CYL. 466	(89-92)	AIR CONDITIONING	-	R73189	0272218
		(89-92)	FAN TO ALTERNATOR	-	RE29018	0372260
4500	YANMAR 4-CYL. 121	(99-00)	FAN	-	M802627	0172214
				-	M809527	0172217
				+ 40A. ALTERNATOR	M802627	0172214
				+ 55A. ALTERNATOR	LVU11661	0272215
4510	YANMAR 4-CYL. 121	(02-04)	FAN TO ALTERNATOR	+ 40A. ALTERNATOR	LVU11661	0272215
				+ CAB	R131435	0785321
				− CAB	R135438	1885281
4520	JOHN DEERE 4-CYL. 149	(05-08)	AIR CONDITIONING	-	R71603	0172214
		(05-08)	FAN TO ALTERNATOR	-	AR43219	0122155
	JOHN DEERE 6-CYL. 404	(69-70)	FAN TO ALTERNATOR	− AIR CONDITIONING	AR43219	0122155
4555	JOHN DEERE 6-CYL. 466	(89-92)	AIR CONDITIONING	-	R73189	0272218
		(89-92)	FAN TO ALTERNATOR	-	RE29018	0372260
4560	JOHN DEERE 6-CYL. 466	(92-94)	AIR CONDITIONING	-	R73189	0272218
		(92-94)	FAN TO ALTERNATOR	-	RE29018	0372260
4600	YANMAR 4-CYL. 121	(98-03)	FAN	+ 40A. ALTERNATOR	M802627	0172214
				+ 55A. ALTERNATOR	LVU11661	0272215

4610	YANMAR 4-CYL. 121	(02-04)	FAN TO ALTERNATOR	+ 40A. ALTERNATOR	LVU11661	0272215
4620	JOHN DEERE 6-CYL. 404	(71-72)	FAN TO ALTERNATOR	-	AR51059	1472251
4630	JOHN DEERE 6-CYL. 404	(73-77)	AIR CONDITIONING	-	R46098	0272215
		(73-77)	FAN TO ALTERNATOR	+ AIR CONDITIONING	AR57266	0372255
				− AIR CONDITIONING	AR54592	0372255
4640	JOHN DEERE 6-CYL. 466	(78-82)	AIR CONDITIONING	-	R71602	0172216
		(78-82)	FAN TO ALTERNATOR	-	AR74662	0372260
4650	JOHN DEERE 6-CYL. 466	(83-88)	AIR CONDITIONING	-	R71602	0172216
		(83-88)	FAN TO ALTERNATOR	-	AR74662	0372260
4700	YANMAR 4-CYL. 134	(00-03)	FAN	+ 40A. ALTERNATOR	M802627	0172214
				+ 55A. ALTERNATOR	LVU11661	0272215
4710	YANMAR 4-CYL. 121	(02-04)	FAN TO ALTERNATOR	+ 40A. ALTERNATOR	LVU11661	0272215
4720	JOHN DEERE 4-CYL. 149	(05-08)	FAN, ALTERNATOR TO AIR CONDITIONING	-	R515222	0384336
4755	JOHN DEERE 6-CYL. 466	(89-91)	AIR CONDITIONING	-	R73189	0272218
		(89-91)	FAN TO ALTERNATOR	-	RE29018	0372260
4760	JOHN DEERE 6-CYL. 466	(92-94)	AIR CONDITIONING	-	R73189	0272218
		(92-94)	FAN TO ALTERNATOR	+ DUAL BELTS	RE29018	0372260
				+ SINGLE BELT	RE41942	0372258
4840	JOHN DEERE 6-CYL. 466	(78-82)	AIR CONDITIONING	-	R71602	0172216
		(78-82)	FAN TO ALTERNATOR	-	AR74662	0372260
4850	JOHN DEERE 6-CYL. 466	(83-88)	AIR CONDITIONING	-	R71602	0172216
		(83-88)	FAN TO ALTERNATOR	-	AR74662	0372260
4955	JOHN DEERE 6-CYL. 466	(89-91)	AIR CONDITIONING	-	R73189	0272218
		(89-91)	FAN TO ALTERNATOR	-	RE29018	0372260
4960	JOHN DEERE 6-CYL. 466	(92-94)	AIR CONDITIONING	-	-	1272212
		(92-94)	FAN TO ALTERNATOR	-	RE41942	0372258
5010	JOHN DEERE 6-CYL. 531	(63-65)	FAN TO ALTERNATOR/GENERATOR	-	AR41574	0173253
5020	JOHN DEERE 6-CYL. 531	(66-72)	FAN TO ALTERNATOR	-	AR46970	0373264
		(66-72)	FAN TO ALTERNATOR/GENERATOR	-	AR41574	0173253
5103	JOHN DEERE 3-CYL. 179	(03-08)	FAN TO ALTERNATOR	-	R73784	2787265
5105	JOHN DEERE 3-CYL. 179	(99-07)	FAN	-	R73784	2787265
5200	JOHN DEERE 3-CYL. 179	(92-97)	AIR CONDITIONING	-	R128502	0372255
		(92-97)	FAN TO ALTERNATOR	-	R73784	2787265
				+ CAB	R73784	2787265
5203	JOHN DEERE 3-CYL. 179	(03-08)	ALTERNATOR	-	R73784	2787265
5205	JOHN DEERE 3-CYL. 179	(99-07)	FAN	-	R73784	2787265
5210	JOHN DEERE 3-CYL. 179	(98-01)	AIR CONDITIONING	-	R128502	0372255
		(98-01)	FAN	-	R73784	2787265
5220	JOHN DEERE 3-CYL. 179	(02-04)	AIR CONDITIONING	-	R128502	0372255
		(02-04)	FAN TO ALTERNATOR	-	R73784	2787265
5225	JOHN DEERE 5-CYL. 186	(05-08)	FAN TO ALTERNATOR	-	R505810	0384334
		(05-08)	FAN, ALTERNATOR TO AIR CONDITIONING	-	R515218	2884339
5300	JOHN DEERE 3-CYL. 179	(92-97)	AIR CONDITIONING	-	R128502	0372255
		(92-97)	FAN TO ALTERNATOR	-	R73784	2787265
5303	JOHN DEERE 3-CYL. 179	(03-08)	ALTERNATOR	-	R73784	2787265
5310	JOHN DEERE 3-CYL. 179	(98-01)	AIR CONDITIONING	-	R128502	0372255
		(98-01)	FAN	-	R73784	2787265
5320	JOHN DEERE 3-CYL. 179	(01-04)	AIR CONDITIONING	-	R128502	0372255
		(01-04)	FAN TO ALTERNATOR	-	R73784	2787265

5325	JOHN DEERE 5-CYL. 186	(05-08)	FAN TO ALTERNATOR	-	R505810	0384334
		(05-08)	FAN, ALTERNATOR TO AIR CONDITIONING	-	R515218	2884339
5400	JOHN DEERE 3-CYL. 179	(92-97)	AIR CONDITIONING	-	R128502	0372255
		(92-97)	FAN TO ALTERNATOR	-	R73784	2787265
5410	JOHN DEERE 4-CYL. 276	(98-01)	FAN, ALTERNATOR TO AIR CONDITIONING	-	R135823	0285303
5420	JOHN DEERE 4-CYL. 276	(02-04)	FAN, ALTERNATOR TO AIR CONDITIONING	-	R135823	0285303
5425	JOHN DEERE 4-CYL. 276	(05-08)	FAN TO ALTERNATOR	-	R216071	0284271
		(05-08)	FAN, ALTERNATOR TO AIR CONDITIONING	-	R133703	0285303
5500	JOHN DEERE 4-CYL. 239	(96-97)	AIR CONDITIONING	-	R128502	0372255
		(96-97)	FAN TO ALTERNATOR	+ CAB	E75596	0201108
				− CAB	N150864	0101105
5510	JOHN DEERE 4-CYL. 276	(98-01)	FAN, ALTERNATOR TO AIR CONDITIONING	-	R135823	0285303
5520	JOHN DEERE 4-CYL. 276	(00-05)	FAN, ALTERNATOR TO AIR CONDITIONING	-	R135823	0285303
5525	JOHN DEERE 4-CYL. 276	(05-08)	FAN TO ALTERNATOR	-	R216071	0284271
		(05-08)	FAN, ALTERNATOR TO AIR CONDITIONING	-	R133703	0285303
5625	JOHN DEERE 4045T POWERTECH	(07-08)	FAN TO ALTERNATOR	+ AIR CONDITIONING	R133703	0285303
				− AIR CONDITIONING	R216071	0284271
6030	JOHN DEERE 6-CYL. 531	(72-77)	AIR CONDITIONING	-	R49422	0272218
		(72-77)	FAN	-	AR46970	0373264
				-	AR56638	0173253
		(72-77)	FAN TO ALTERNATOR	-	AR53099	0372258
6110	JOHN DEERE 4045T POWERTECH	(98-01)	FAN TO ALTERNATOR	-	-	1485304
		(98-01)	FAN, ALTERNATOR TO AIR CONDITIONING	-	L111601	1585345
6120	JOHN DEERE 4-CYL. 276	(02-08)	FAN TO ALTERNATOR	-	L114489	0285304
		(02-08)	FAN, ALTERNATOR TO AIR CONDITIONING	-	L111601	1585345
6200	JOHN DEERE 4-CYL. 239	(92-97)	FAN TO ALTERNATOR	+ HYDRAULIC TENSIONER; →I SERIAL No. 125189	L111169	0284286
				+ HYDRAULIC TENSIONER; I→ SERIAL No. 125190	L111685	2785290
				+ MECHANICAL TENSIONER	L111169	0284286
		(92-97)	FAN, ALTERNATOR TO AIR CONDITIONING	+ HYDRAULIC TENSIONER	L111170	0785326
				+ MECHANICAL TENSIONER	L110605	0285325
6210	JOHN DEERE 4045T POWERTECH	(98-01)	FAN TO ALTERNATOR	-	-	1485304
		(98-01)	FAN, ALTERNATOR TO AIR CONDITIONING	-	L111601	1585345
6215	JOHN DEERE 4045T POWERTECH	(03-08)	FAN TO ALTERNATOR	-	114489	1485304
		(03-08)	FAN, ALTERNATOR TO AIR CONDITIONING	-	L111601	1585345
6220	JOHN DEERE 4045T POWERTECH	(02-08)	FAN TO ALTERNATOR	-	L114489	0285304
		(02-08)	FAN, ALTERNATOR TO AIR CONDITIONING	-	L111601	1585345

6300	JOHN DEERE 4-CYL. 239	(92-97)	FAN TO ALTERNATOR	+ HYDRAULIC TENSIONER; →I SERIAL No. 125189	L111169	0284286
				+ HYDRAULIC TENSIONER; I→ SERIAL No. 125190	L111685	2785290
				+ MECHANICAL TENSIONER	L111169	0284286
		(92-97)	FAN, ALTERNATOR TO AIR CONDITIONING	+ HYDRAULIC TENSIONER; →I SERIAL No. 106163	L111170	0785326
				+ HYDRAULIC TENSIONER; I→ SERIAL No. 106164	L110606	0285327
				+ MECHANICAL TENSIONER	L110605	0285325
6310	JOHN DEERE 4045T POWERTECH	(98-01)	FAN TO ALTERNATOR	-	-	1485304
		(98-01)	FAN, ALTERNATOR TO AIR CONDITIONING	-	L111600	0285343
6320	JOHN DEERE 4045T POWERTECH	(02-08)	FAN TO ALTERNATOR	-	L114489	0285304
		(02-08)	FAN, ALTERNATOR TO AIR CONDITIONING	-	L111601	1585345
6400	JOHN DEERE 4-CYL. 276	(92-97)	FAN TO ALTERNATOR	+ HYDRAULIC TENSIONER; →I SERIAL No. 125189	L111169	0284286
				+ HYDRAULIC TENSIONER; I→ SERIAL No. 125190	L111685	2785290
				+ MECHANICAL TENSIONER	L111169	0284286
		(92-97)	FAN, ALTERNATOR TO AIR CONDITIONING	+ HYDRAULIC TENSIONER	L111170	0785326
				+ MECHANICAL TENSIONER	L110605	0285325
6403	JOHN DEERE 4-CYL. 276	(02-08)	FAN TO ALTERNATOR	-	R502599	0285281
		(02-08)	FAN, ALTERNATOR TO AIR CONDITIONING	-	R500381	0385331
6410	JOHN DEERE 4045T POWERTECH	(98-00)	FAN TO ALTERNATOR	-	-	1485304
				-	L114489	0285304
		(98-00)	FAN, ALTERNATOR TO AIR CONDITIONING	-	L111600	0285343
				-	L111601	1585345
6415	JOHN DEERE 4-CYL. 276	(03-04)	FAN TO ALTERNATOR	-	114489	1485304
				-	L114489	0285304
		(03-08)	FAN, ALTERNATOR TO AIR CONDITIONING	-	L111601	1585345
6420	JOHN DEERE 4-CYL. 276	(02-08)	FAN TO ALTERNATOR	-	L114489	0285304
		(02-08)	FAN, ALTERNATOR TO AIR CONDITIONING	-	L111601	1585345
6430	JOHN DEERE 4-CYL. 276	(07-08)	FAN TO ALTERNATOR	-	L153280	0285303
		(07-08)	FAN, ALTERNATOR TO AIR CONDITIONING	-	L155538	0285343
6510	JOHN DEERE 4045T POWERTECH	(98-01)	FAN TO ALTERNATOR	-	L114489	0285304
		(98-01)	FAN, ALTERNATOR TO AIR CONDITIONING	-	L111600	0285343
6603	JOHN DEERE 6-CYL. 414	(02-08)	FAN TO AIR CONDITIONING	-	R505186	0785285
		(02-08)	FAN, ALTERNATOR TO AIR CONDITIONING	-	R135194	0285333
6615	JOHN DEERE 6-CYL. 414	(02-08)	FAN TO AIR CONDITIONING	-	L155538	0285343
		(02-08)	FAN TO ALTERNATOR	-	L114488	0285303
		(02-08)	FAN, ALTERNATOR TO AIR CONDITIONING	-	L111601	1585345
6715	JOHN DEERE 6-CYL. 414	(02-08)	FAN TO AIR CONDITIONING	-	L155538	0285343
		(02-08)	FAN TO ALTERNATOR	-	L114488	0285303
		(02-08)	FAN, ALTERNATOR TO AIR CONDITIONING	-	L111601	1585345

7020	JOHN DEERE 6-CYL. 404	(71-75)	AIR CONDITIONING	-	R46098	0272215
		(71-75)	FAN TO ALTERNATOR	-	AR57266	0372255
				+ AIR CONDITIONING; →I SERIAL No. 335845	AR56638	0173253
				− AIR CONDITIONING; →I SERIAL No. 335845	AR51059	1472251
7130	JOHN DEERE 6-CYL. 6.8 L	(08)	SERPENTINE	+ AIR CONDITIONING	L111601	1585345
				− AIR CONDITIONING	L114488	0285303
7200	JOHN DEERE 6-CYL. 359	(93-96)	FAN TO ALTERNATOR	+ CAB	R118317	0285294
				− CAB	R95917	2985284
		(93-96)	FAN, ALTERNATOR TO AIR CONDITIONING	-	R115614	0385331
7210	JOHN DEERE 6-CYL. 414	(96-02)	FAN TO ALTERNATOR	+ CAB	R131435	0785321
				− CAB	R135438	1885281
7220	JOHN DEERE 6-CYL. 414	(03-08)	FAN TO ALTERNATOR	-	L114488	0285303
		(03-08)	FAN, ALTERNATOR TO AIR CONDITIONING	-	L111601	1585345
7230	JOHN DEERE 6-CYL. 6.8 L	(08)	SERPENTINE	+ AIR CONDITIONING	L111600	0285343
				− AIR CONDITIONING	L114488	0285303
7320	JOHN DEERE 6-CYL. 414	(03-08)	FAN TO ALTERNATOR	-	L114488	0285303
		(03-08)	FAN, ALTERNATOR TO AIR CONDITIONING	-	L111600	0285343
7330	JOHN DEERE 6-CYL. 6.8 L	(08)	SERPENTINE	+ AIR CONDITIONING	L155538	0285343
				− AIR CONDITIONING	L153280	0285303
7400	JOHN DEERE 6-CYL. 414	(94-96)	FAN TO ALTERNATOR	-	R118317	0285294
		(94-96)	FAN, ALTERNATOR TO AIR CONDITIONING	-	R115614	0385331
7410	JOHN DEERE 6-CYL. 414	(97-02)	FAN TO ALTERNATOR	+ CAB	R131435	0785321
				− CAB	R135438	1885281
7420	JOHN DEERE 6-CYL. 414	(03-08)	FAN TO ALTERNATOR	-	L153280	0285303
		(03-08)	FAN, ALTERNATOR TO AIR CONDITIONING	-	L153285	0285343
7510	JOHN DEERE 6-CYL. 414	(99-02)	FAN TO ALTERNATOR	+ CAB	R131435	0785321
				− CAB	R135438	1885281
7520	JOHN DEERE 6-CYL. 414	(03-08)	FAN TO ALTERNATOR	-	L153280	0285303
		(03-08)	FAN, ALTERNATOR TO AIR CONDITIONING	-	L153285	0285343
	JOHN DEERE 6-CYL. 531	(72-75)	AIR CONDITIONING	-	R49422	0272218
		(72-75)	FAN	-	AR46970	0373264
				-	AR56638	0173253
		(72-75)	FAN TO ALTERNATOR	-	AR53099	0372258
7600	JOHN DEERE 6-CYL. 414	(92-96)	FAN TO ALTERNATOR	+ AIR BRAKE COMPRESSOR	R115936	0385331
				− AIR BRAKE COMPRESSOR	R95917	2985284
		(92-96)	FAN, ALTERNATOR TO AIR CONDITIONING	+ AIR BRAKE COMPRESSOR	R115935	0385354
				− AIR BRAKE COMPRESSOR	R95924	0385331
7610	JOHN DEERE 6-CYL. 414	(96-02)	FAN TO ALTERNATOR	− AIR CONDITIONING	R123460	0785285
		(96-02)	FAN, ALTERNATOR TO AIR CONDITIONING	-	R115614	0385331
7630	JOHN DEERE 6068T POWERTECH	(07-08)	FAN	− VISCOUS FAN CLUTCH	R267275	1485350
				+ VISCOUS FAN CLUTCH	R245222	0285346
7700	JOHN DEERE 6-CYL. 466	(93-96)	FAN TO ALTERNATOR	-	R106122	2485285
		(93-96)	FAN, ALTERNATOR TO AIR CONDITIONING	-	R106120	0285301
7710	JOHN DEERE 6-CYL. 8.1 L	(96-03)	FAN TO ALTERNATOR	+ CAB	R133518	0285309
				− CAB	R123459	0785285

7730	JOHN DEERE 6068T POWERTECH	(07-08)	FAN	− VISCOUS FAN CLUTCH	R267275	1485350
				+ VISCOUS FAN CLUTCH	R245222	0285346
7800	JOHN DEERE 6-CYL. 466	(92-96)	FAN TO ALTERNATOR	-	R106122	2485285
		(92-96)	FAN, ALTERNATOR TO AIR CONDITIONING	-	R106120	0285301
7820	JOHN DEERE 6-CYL. 8.1 L	(04-06)	FAN, ALTERNATOR TO AIR CONDITIONING	-	R181918	0285263
7830	JOHN DEERE 6068T POWERTECH	(07-08)	FAN	− VISCOUS FAN CLUTCH	R267275	1485350
8010	GM 6-CYL. 426	(60-61)	FAN	-	AR29285R	0172216
		(60-61)	GENERATOR	-	R29474R	0372204
8020	GM 6-CYL. 426	(61-64)	FAN	-	AR29285R	0172216
		(61-64)	GENERATOR	-	R29474R	0372204
8100	JOHN DEERE 6-CYL. 466	(95-96)	FAN	-	R131213	0242131
		(95-96)	ALTERNATOR TO AIR CONDITIONING	+ AIR BRAKE COMPRESSOR	R124786	0285303
				− AIR BRAKE COMPRESSOR	R124785	0285254
	JOHN DEERE 6-CYL. 8.1 L	(97-99)	FAN	-	R131213	0242131
		(97-99)	ALTERNATOR TO AIR CONDITIONING	+ AIR BRAKE COMPRESSOR	R124786	0285303
				− AIR BRAKE COMPRESSOR	R124785	0285254
8110	JOHN DEERE 6-CYL. 8.1 L	(99-01)	AIR BRAKE COMPRESSOR	-	R157688	0285303
		(00-01)	FAN	-	R131213	0242131
8120	JOHN DEERE 6-CYL. 8.1 L	(04)	FAN	-	R164820	0285249
		(02-04)	FAN, ALTERNATOR TO AIR CONDITIONING	+ AIR BRAKE COMPRESSOR	R228566	0285316
				− AIR BRAKE COMPRESSOR	R228118	0285294
		(05)	ALTERNATOR TO AIR CONDITIONING	+ AIR BRAKE COMPRESSOR	R228566	0285316
8130	JOHN DEERE 6-CYL. 9.0 L	(08)	SERPENTINE	+ AIR BRAKE COMPRESSOR	R210808	0285317
				− AIR BRAKE COMPRESSOR	R211183	0285257
8200	JOHN DEERE 6-CYL. 8.1 L	(95-99)	FAN	-	R131213	0242131
		(95-99)	ALTERNATOR TO AIR CONDITIONING	+ AIR BRAKE COMPRESSOR	R124786	0285303
				− AIR BRAKE COMPRESSOR	R124785	0285254
8210	JOHN DEERE 6-CYL. 8.1 L	(00-01)	AIR BRAKE COMPRESSOR	-	R157688	0285303
		(00-01)	FAN	-	R131213	0242131
8220	JOHN DEERE 6-CYL. 8.1 L	(02-05)	FAN, ALTERNATOR TO AIR CONDITIONING	+ AIR BRAKE COMPRESSOR	R228566	0285316
8230	JOHN DEERE 6-CYL. 548	(06)	ALTERNATOR TO AIR CONDITIONING	+ AIR BRAKE COMPRESSOR	R210808	0285317
				− AIR BRAKE COMPRESSOR	R211183	0285257
	JOHN DEERE 6-CYL. 9.0 L	(08)	SERPENTINE	+ AIR BRAKE COMPRESSOR	R210808	0285317
				− AIR BRAKE COMPRESSOR	R211183	0285257
		(07)	ALTERNATOR TO AIR CONDITIONING	+ AIR BRAKE COMPRESSOR	R210808	0285317
				− AIR BRAKE COMPRESSOR	R211183	0285257
8300	JOHN DEERE 6-CYL. 466	(95-96)	FAN	-	R131213	0242131
		(95-96)	ALTERNATOR TO AIR CONDITIONING	+ AIR BRAKE COMPRESSOR	R124786	0285303
				− AIR BRAKE COMPRESSOR	R124785	0285254
	JOHN DEERE 6-CYL. 8.1 L	(97-99)	FAN	-	R131213	0242131
		(97-99)	ALTERNATOR TO AIR CONDITIONING	+ AIR BRAKE COMPRESSOR	R124786	0285303
				− AIR BRAKE COMPRESSOR	R124785	0285254
8310	JOHN DEERE 6-CYL. 8.1 L	(99-01)	AIR BRAKE COMPRESSOR	-	R157688	0285303
		(00-01)	FAN	-	R131213	0242131
8320	JOHN DEERE 6-CYL. 8.1 L	(02)	FAN	-	R164820	0285249
		(02-05)	FAN, ALTERNATOR TO AIR CONDITIONING	+ AIR BRAKE COMPRESSOR	R228566	0285316
8330	JOHN DEERE 6-CYL. 9.0 L	(08)	SERPENTINE	+ AIR BRAKE COMPRESSOR	R210808	0285317
				− AIR BRAKE COMPRESSOR	R211183	0285257

8400	JOHN DEERE 6-CYL. 8.1 L	(95-99)	FAN	-	R131213	0242131
		(95-99)	ALTERNATOR TO AIR CONDITIONING	+ AIR BRAKE COMPRESSOR	R124786	0285303
				− AIR BRAKE COMPRESSOR	R124785	0285254
8410	JOHN DEERE 6-CYL. 8.1 L	(00-01)	AIR BRAKE COMPRESSOR	-	R157688	0285303
		(00-01)	FAN	-	R131213	0242131
8420	JOHN DEERE 6-CYL. 8.1 L	(03)	FAN	-	R164820	0285249
		(02-04)	FAN, ALTERNATOR TO AIR CONDITIONING	+ AIR BRAKE COMPRESSOR	R228566	0285316
		(05)	ALTERNATOR TO AIR CONDITIONING	+ AIR BRAKE COMPRESSOR	R228566	0285316
8430	JOHN DEERE 6-CYL. 466	(78)	AIR BRAKE COMPRESSOR	-	R210808	0285317
		(75-78)	AIR CONDITIONING	-	R46098	0272215
		(75-78)	FAN TO ALTERNATOR	-	AR70663	1401127
				-	AR74662	0372260
	JOHN DEERE 6-CYL. 9.0 L	(08)	SERPENTINE	+ AIR BRAKE COMPRESSOR	R210808	0285317
				− AIR BRAKE COMPRESSOR	R211183	0285257
8440	JOHN DEERE 6-CYL. 466	(79-82)	AIR CONDITIONING	-	R71603	0172214
		(79-82)	FAN TO ALTERNATOR	-	AR74662	0372260
8450	JOHN DEERE 6-CYL. 466	(82-88)	AIR CONDITIONING	-	R73189	0272218
		(82-88)	ALTERNATOR	-	R71603	0172214
		(82-88)	FAN	-	AR57266	0372255
8520	JOHN DEERE 6-CYL. 8.1 L	(03)	FAN	-	R164820	0285249
		(02-05)	FAN, ALTERNATOR TO AIR CONDITIONING	+ AIR BRAKE COMPRESSOR	R228566	0285316
8530	JOHN DEERE 6-CYL. 9.0 L	(08)	SERPENTINE	+ AIR BRAKE COMPRESSOR	R210808	0285317
				− AIR BRAKE COMPRESSOR	R211183	0285257
8560	JOHN DEERE 6-CYL. 466	(89-93)	AIR CONDITIONING	-	R73189	0272218
		(89-93)	FAN TO ALTERNATOR	-	AT58166	1472251
8630	JOHN DEERE 6-CYL. 619	(75-78)	AIR CONDITIONING	-	R49422	0272218
		(75-78)	FAN TO ALTERNATOR	-	AR70413	0372262
8640	JOHN DEERE 6-CYL. 619	(79-82)	AIR CONDITIONING	-	R71603	0172214
		(79-82)	FAN TO ALTERNATOR	-	AR87671	0399322
8650	JOHN DEERE 6-CYL. 619	(82-88)	AIR CONDITIONING	-	R73189	0272218
		(82-88)	ALTERNATOR	+ 110A. ALTERNATOR	R76835	0172214
		(82-88)	FAN	-	-	1472264
8760	JOHN DEERE 6-CYL. 619	(89-93)	AIR CONDITIONING	-	R73189	0272218
		(89-93)	WATER PUMP	-	RE37851	1472264
8770	JOHN DEERE 6-CYL. 619	(96)	ALTERNATOR	-	RE37851	1472264
		(93-95)	WATER PUMP TO ALTERNATOR	-	RE37851	1472264
8850	JOHN DEERE V-8 955	(82-88)	AIR CONDITIONING	-	R69393	0372242
		(82-88)	ALTERNATOR	-	R77252	0172208
8870	JOHN DEERE 6-CYL. 619	(93-96)	WATER PUMP TO ALTERNATOR	-	RE37851	1472264
8960	CUMMINS 6-CYL. 855	(89-93)	AIR CONDITIONING	-	R73189	0272218
		(89-93)	WATER PUMP	-	217638	2484242
9100	JOHN DEERE 6-CYL. 8.1 L	(96-01)	FAN TO ALTERNATOR	-	R135597	0285299
9120	JOHN DEERE 6-CYL. 8.1 L	(02-08)	FAN	-	R175712	0285299
9200	JOHN DEERE 6-CYL. 10.5 L	(96-01)	FAN	-	R131083	0242193
9220	JOHN DEERE 6-CYL. 12.5 L	(02-08)	FAN	-	R131083	0242193
		(02-08)	ALTERNATOR TO AIR CONDITIONING	-	R190199	0285301
9300	JOHN DEERE 6-CYL. 12.5 L	(96-01)	FAN	-	R131083	0242193
9320	JOHN DEERE 6-CYL. 12.5 L	(02-08)	FAN	-	R131083	0242193
		(02-08)	ALTERNATOR TO AIR CONDITIONING	-	R190199	0285301
9400	JOHN DEERE 6-CYL. 12.5 L	(96-01)	FAN	-	R131083	0242193

9420	JOHN DEERE 6-CYL. 12.5 L	(02-08)	FAN	-	R131083	0242193
		(02-08)	ALTERNATOR TO AIR CONDITIONING	-	R190199	0285301
9520	JOHN DEERE 6-CYL. 12.5 L	(02-08)	FAN	-	R131083	0242193
		(02-08)	ALTERNATOR TO AIR CONDITIONING	-	R190199	0285301
				-	R199163	0285301
9620	JOHN DEERE 6-CYL. 12.5 L	(04-08)	ALTERNATOR TO AIR CONDITIONING	-	R199163	0285301
2355N	JOHN DEERE 3-CYL. 179	(87-92)	FAN TO ALTERNATOR	-	R73784	2787265
				-	R97939	1401101
				-	R97940	0201102
2855N	JOHN DEERE 4-CYL. 239	(87-92)	FAN TO ALTERNATOR	− VISCOUS FAN	R87154	0201108
				+ VISCOUS FAN	R87153	2601106
300 TRACTOR	JOHN DEERE 3-CYL. 135	(75-79)	FAN TO ALTERNATOR	-	T20334T	0201092
	JOHN DEERE 3-CYL. 152	(68-77)	FAN TO ALTERNATOR	-	T20334T	0201092
300B INDUSTRIAL	JOHN DEERE 3-CYL. 152	(68-81)	FAN TO ALTERNATOR	-	T20334T	0201092
301A	JOHN DEERE 3-CYL. 135	(74-79)	FAN TO ALTERNATOR	-	T20334T	0201092
	JOHN DEERE 3-CYL. 152	(74-81)	FAN TO ALTERNATOR	-	T20334T	0201092
302 INDUSTRIAL	JOHN DEERE 3-CYL. 147	(74-81)	FAN TO ALTERNATOR	-	T20334T	0201092
	JOHN DEERE 3-CYL. 164	(74-81)	FAN TO ALTERNATOR	-	T20334T	0201092
330 TRACTOR	JOHN DEERE 2-CYL. 101	(58-60)	FAN	-	M1900T	0173206
		(58-60)	GENERATOR	-	M1862T	0173186
350C	JOHN DEERE 3-CYL. 164	(75-86)	FAN TO ALTERNATOR	-	T20161	0201096
				-	T24757	1901098
400 INDUSTRIAL	JOHN DEERE 4-CYL. 180	(75-79)	FAN TO ALTERNATOR	-	T20334T	0201092
	JOHN DEERE 4-CYL. 219	(75-85)	FAN TO ALTERNATOR	-	T20334T	0201092
401 INDUSTRIAL	JOHN DEERE 4-CYL. 180	(68-74)	FAN TO ALTERNATOR	-	T20334T	0201092
	JOHN DEERE 4-CYL. 219	(68-74)	FAN TO ALTERNATOR	-	T20334T	0201092
401B INDUSTRIAL	JOHN DEERE 4-CYL. 180	(79-81)	FAN TO ALTERNATOR	-	T20161	0201096
				-	T24757	1901098
	JOHN DEERE 4-CYL. 219	(79-81)	FAN TO ALTERNATOR	-	T20161	0201096
				-	T24757	1901098
401C INDUSTRIAL	JOHN DEERE 4-CYL. 239	(74-83)	FAN TO ALTERNATOR	-	T20334T	0201092
440C	JOHN DEERE 2-CYL. 113	(58-61)	FAN	-	5123192	0173225
		(58-61)	WATER PUMP TO GENERATOR	→I SERIAL No. 206717	5121847	1473203
				I→ SERIAL No. 206718	5124432	0173197
450C	JOHN DEERE 4-CYL. 219	(74-85)	FAN	→I SERIAL No. 13560	T20161	0201096
				I→ SERIAL No. 15485	T24757	1901098
500 INDUSTRIAL	JOHN DEERE 4-CYL. 241	(63-67)	FAN TO GENERATOR	-	AR32659R	0173244
	JOHN DEERE 4-CYL. 270	(63-67)	FAN TO GENERATOR	-	AR32661R	1573238
600 TRACTOR	JOHN DEERE 4-CYL. 341	(64-70)	FAN TO ALTERNATOR/GENERATOR	-	AR32659R	0173244
	JOHN DEERE 6-CYL. 404	(64-70)	FAN TO ALTERNATOR/GENERATOR	-	AR41576	0173245
				-	AR41629	0173240
6405 ADVANTAGE	JOHN DEERE 4045T POWERTECH	(97-01)	FAN	-	8K1930	1485304
		(97-02)	FAN TO ALTERNATOR	-	L114489	0285304
		(97-02)	FAN, ALTERNATOR TO AIR CONDITIONING	-	L111600	0285343

6500L	JOHN DEERE 4-CYL. 239	(95)	FAN TO ALTERNATOR	→I SERIAL No. 159438 ; + HYDRAULIC TENSIONER	L110600	0284285
				I→ SERIAL No. 159439 ; + MECHANICAL TENSIONER	L110599	0785285
	JOHN DEERE 4-CYL. 276	(94-97)	FAN TO ALTERNATOR	→I SERIAL No. 159438 ; + HYDRAULIC TENSIONER	L110600	0284285
				I→ SERIAL No. 159439 ; + MECHANICAL TENSIONER	L110599	0785285
6520L	JOHN DEERE 4045T POWERTECH	(02-08)	FAN TO ALTERNATOR	-	L111601	1585345
		(02-08)	FAN, ALTERNATOR TO AIR CONDITIONING	-	L114489	0285304
6605 ADVANTAGE	JOHN DEERE 6068T POWERTECH	(97-02)	FAN TO ALTERNATOR	-	L114488	0285303
		(97-02)	FAN, ALTERNATOR TO AIR CONDITIONING	-	L111600	0285343
700 INDUSTRIAL	JOHN DEERE 6-CYL. 531	(65)	FAN TO ALTERNATOR	-	T20334	0201092
7130 PREMIUM	JOHN DEERE 6-CYL. 6.8 L	(08)	SERPENTINE	-	L111601	1585345
7230 PREMIUM	JOHN DEERE 6-CYL. 6.8 L	(08)	SERPENTINE	-	L111600	0285343
7330 PREMIUM	JOHN DEERE 6-CYL. 6.8 L	(08)	SERPENTINE	+ AIR CONDITIONING	L169273	0285329
				− AIR CONDITIONING	L155538	0285343
7405 ADVANTAGE	JOHN DEERE 6-CYL. 414	(98-02)	FAN TO ALTERNATOR	-	R123453	0285281
7430 PREMIUM	JOHN DEERE 6-CYL. 6.8 L	(08)	SERPENTINE	-	L169273	0285329
760 INDUSTRIAL	JOHN DEERE 6-CYL. 531	(65-68)	FAN TO ALTERNATOR	-	T20334	0201092
7720 TRACTOR	JOHN DEERE 6-CYL. 414	(04-06)	FAN, ALTERNATOR TO AIR CONDITIONING	-	R202628	0285346
8100T	JOHN DEERE 6-CYL. 8.1 L	(97-99)	FAN	-	R131213	0242131
		(97-99)	ALTERNATOR TO AIR CONDITIONING	+ AIR BRAKE COMPRESSOR	R124786	0285303
				− AIR BRAKE COMPRESSOR	R124785	0285254
8110T	JOHN DEERE 6-CYL. 8.1 L	(00-01)	FAN	-	R131213	0242131
8120T	JOHN DEERE 6-CYL. 8.1 L	(04)	FAN	-	R164820	0285249
		(02-05)	FAN, ALTERNATOR TO AIR CONDITIONING	+ AIR BRAKE COMPRESSOR	R228566	0285316
8200T	JOHN DEERE 6-CYL. 8.1 L	(97-99)	FAN	-	R131213	0242131
		(97-99)	ALTERNATOR TO AIR CONDITIONING	+ AIR BRAKE COMPRESSOR	R124786	0285303
				− AIR BRAKE COMPRESSOR	R124785	0285254
8210T	JOHN DEERE 6-CYL. 8.1 L	(00-01)	FAN	-	R131213	0242131
8220T	JOHN DEERE 6-CYL. 8.1 L	(04)	FAN	-	R164820	0285249
		(02-05)	FAN, ALTERNATOR TO AIR CONDITIONING	+ AIR BRAKE COMPRESSOR	R228566	0285316
8230T	JOHN DEERE 6-CYL. 548	(06)	ALTERNATOR TO AIR CONDITIONING	+ AIR BRAKE COMPRESSOR	R210808	0285317
				− AIR BRAKE COMPRESSOR	R211183	0285257
	JOHN DEERE 6-CYL. 9.0 L	(08)	SERPENTINE	+ AIR BRAKE COMPRESSOR	R210808	0285317
				− AIR BRAKE COMPRESSOR	R211183	0285257
		(07)	ALTERNATOR TO AIR CONDITIONING	+ AIR BRAKE COMPRESSOR	R210808	0285317
				− AIR BRAKE COMPRESSOR	R211183	0285257
8300T	JOHN DEERE 6-CYL. 8.1 L	(97-99)	FAN	-	R131213	0242131
		(97-99)	ALTERNATOR TO AIR CONDITIONING	+ AIR BRAKE COMPRESSOR	R124786	0285303
				− AIR BRAKE COMPRESSOR	R124785	0285254
8310T	JOHN DEERE 6-CYL. 8.1 L	(00-01)	FAN	-	R131213	0242131
8320T	JOHN DEERE 6-CYL. 8.1 L	(02-03)	FAN	-	R164820	0285249
		(02-05)	FAN, ALTERNATOR TO AIR CONDITIONING	+ AIR BRAKE COMPRESSOR	R228566	0285316
8330T	JOHN DEERE 6-CYL. 9.0 L	(08)	SERPENTINE	+ AIR BRAKE COMPRESSOR	R210808	0285317
				− AIR BRAKE COMPRESSOR	R211183	0285257

8400T	JOHN DEERE 6-CYL. 8.1 L	(97-99)	FAN	-	R131213	0242131
		(97-99)	ALTERNATOR TO AIR CONDITIONING	+ AIR BRAKE COMPRESSOR	R124786	0285303
				− AIR BRAKE COMPRESSOR	R124785	0285254
8410T	JOHN DEERE 6-CYL. 8.1 L	(00-01)	FAN	-	R131213	0242131
8420T	JOHN DEERE 6-CYL. 8.1 L	(02)	FAN	-	R164820	0285249
		(02-05)	FAN, ALTERNATOR TO AIR CONDITIONING	+ AIR BRAKE COMPRESSOR	R228566	0285316
8430T	JOHN DEERE 6-CYL. 9.0 L	(08)	SERPENTINE	+ AIR BRAKE COMPRESSOR	R210808	0285317
				− AIR BRAKE COMPRESSOR	R211183	0285257
850B	JOHN DEERE 6-CYL. 466	(85-94)	FAN	-	AT31010	0172253
		(85-94)	FAN TO ALTERNATOR	-	-	0372203
8520T	JOHN DEERE 6-CYL. 8.1 L	(05)	FAN	-	R164820	0285249
		(02-05)	FAN, ALTERNATOR TO AIR CONDITIONING	+ AIR BRAKE COMPRESSOR	R228566	0285316
900HC	YANMAR 3-CYL. 78	(86-90)	FAN TO ALTERNATOR	-	-	1272212
9300T	JOHN DEERE 6-CYL. 12.5 L	(99-00)	FAN	-	R175825	0189283
		(99-00)	ALTERNATOR TO AIR CONDITIONING	-	R175826	0285306
9320T	JOHN DEERE 6-CYL. 12.5 L	(02-08)	FAN	-	R131083	0242193
		(02-08)	ALTERNATOR TO AIR CONDITIONING	-	R199163	0285301
9400T	JOHN DEERE 6-CYL. 12.5 L	(99-01)	FAN	-	R175825	0189283
		(99-01)	ALTERNATOR TO AIR CONDITIONING	-	R175826	0285306
9420T	JOHN DEERE 6-CYL. 12.5 L	(02-08)	FAN	-	R131083	0242193
		(02-08)	ALTERNATOR TO AIR CONDITIONING	-	R199163	0285301
9520T	JOHN DEERE 6-CYL. 12.5 L	(02-08)	FAN	-	R131083	0242193
		(02-08)	ALTERNATOR TO AIR CONDITIONING	-	R199163	0285301
9620T	JOHN DEERE 6-CYL. 12.5 L	(04-08)	ALTERNATOR TO AIR CONDITIONING	-	R199163	0285301
A	JOHN DEERE 2-CYL. 309	(34-39)	GENERATOR	SERIAL No. 542718 → 583999	A3037R	0372199
				→ SERIAL No. 584000	B1587R	0172192
	JOHN DEERE 2-CYL. 321	(40-52)	GENERATOR	SERIAL No. 542718 → 583999	A3037R	0372199
				→ SERIAL No. 584000	B1587R	0172192
AO	JOHN DEERE 2-CYL. 309	(36-40)	GENERATOR	SERIAL No. 260000 → 271999	A2745R	0372199
				→ SERIAL No. 272000	D3116R	0372203
	JOHN DEERE 2-CYL. 321	(41-53)	GENERATOR	SERIAL No. 260000 → 271999	A2745R	0372199
				→ SERIAL No. 272000	D3116R	0372203
AR	JOHN DEERE 2-CYL. 309	(36-40)	GENERATOR	SERIAL No. 260000 → 271999	A2745R	0372199
				→ SERIAL No. 272000	D3116R	0372203
	JOHN DEERE 2-CYL. 321	(41-53)	GENERATOR	SERIAL No. 260000 → 271999	A2745R	0372199
				→ SERIAL No. 272000	D3116R	0372203
B	JOHN DEERE 2-CYL. 149	(35-38)	GENERATOR	-	B1587R	0172192
		(35-38)	WATER PUMP TO GENERATOR	-	B2893R	1272212
	JOHN DEERE 2-CYL. 175	(38-47)	GENERATOR	-	B1587R	0172192
		(38-47)	WATER PUMP TO GENERATOR	-	B2893R	1272212
	JOHN DEERE 2-CYL. 190	(47-52)	GENERATOR	-	B1587R	0172192
		(47-52)	WATER PUMP TO GENERATOR	-	B2893R	1272212
D	JOHN DEERE 2-CYL. 465	(23-27)	GENERATOR	→ SERIAL No. 161400	B1587R	0172192
	JOHN DEERE 2-CYL. 501	(27-53)	GENERATOR	→ SERIAL No. 161400	B1587R	0172192
G	JOHN DEERE 2-CYL. 413	(37-53)	GENERATOR	-	B1587R	0172192
R	JOHN DEERE 2-CYL. 416	(49-54)	FAN TO GENERATOR	-	R221R	0102114

KIOTI						
DK45	KIOTI 4A220	(00-05)	FAN TO ALTERNATOR	-	-	0172217
LB1914	DAE DONG TD950	(91-07)	FAN TO ALTERNATOR	-	-	0172206
LK2552	KIOTI TD1300F-1	(97-01)	FAN TO ALTERNATOR	-	-	0172217
LK2554	KIOTI TD1300F-1	(93-04)	FAN TO ALTERNATOR	-	-	0172217
LK3052	KIOTI TD1400	(99-01)	FAN TO ALTERNATOR	-	-	0172217
LK3054	KIOTI TD1400	(92-04)	FAN TO ALTERNATOR	-	-	0172217
LANDINI						
5560	PERKINS 3-CYL. 152	(88-94)	FAN TO ALTERNATOR	-	-	0172225
6530	PERKINS 4-CYL. 236	(85-91)	FAN TO ALTERNATOR	-	1446980M1	1472227
6830	PERKINS 4-CYL. 236	(84-88)	FAN TO ALTERNATOR	-	-	1472227
7830	PERKINS 4-CYL. 236	(84-91)	FAN TO ALTERNATOR	-	2614B542	0173227
7860	PERKINS 4-CYL. 236	(88-96)	FAN TO ALTERNATOR	-	-	0172225
8550	PERKINS 4-CYL. 248	(85-88)	AIR CONDITIONING	-	-	0399322
		(85-88)	FAN TO ALTERNATOR	-	1446201M1	0372232
8560	PERKINS 4-CYL. 248	(90-94)	FAN TO ALTERNATOR	-	-	1472227
12500	PERKINS 6-CYL. 354	(85-91)	FAN TO ALTERNATOR	-	-	0122155
14500	PERKINS 6-CYL. 354	(86-96)	FAN TO ALTERNATOR	→I SERIAL No. U536462	-	1472251
				I→ SERIAL No. U536463	1447419M91	0122155
10000S	PERKINS 6-CYL. 354	(82-96)	FAN TO ALTERNATOR	→I SERIAL No. 12900075	1447695M91	0372245
				I→ SERIAL No. 12900076	-	0272247
CF5030	PERKINS AD3.1525	(91-94)	FAN TO ALTERNATOR	-	-	0172225
DT5500	PERKINS 3-CYL. 152	(88)	FAN TO ALTERNATOR	-	1446203M1	0422134
DT6500	PERKINS 4-CYL. 236	(88)	FAN TO ALTERNATOR	→I SERIAL No. 1214499	1447592M1	0172225
				I→ SERIAL No. 1214500	1446980M1	1472227
DT8500	PERKINS 4-CYL. 248	(88)	FAN TO ALTERNATOR	→I SERIAL No. 1231517	1447592M1	0172225
				I→ SERIAL No. 1231518	1446980M1	1472227
TREKKER 85	PERKINS 4-CYL. 248	(92-00)	FAN TO ALTERNATOR	-	-	0172225
LEYLAND						
154	LEYLAND 4-CYL. 91	(79-84)	FAN TO ALTERNATOR	-	13H3348	1272212
		(79-84)	HYDRAULIC PUMP	-	BTJ6280	0201102
	LEYLAND 4-CYL. 99	(70-84)	FAN TO ALTERNATOR	-	13H4646	0172208
		(70-84)	HYDRAULIC PUMP	-	BTJ6280	0201102
235	LEYLAND 4-CYL. 109	(82-84)	HYDRAULIC PUMP	-	-	0372232
272	LEYLAND 4-CYL. 230	(76-84)	FAN TO ALTERNATOR	-	12B1421	0372232
344	LEYLAND 4-CYL. 208	(70-72)	FAN TO ALTERNATOR	-	BMK977	0372232
384	LEYLAND 4-CYL. 230	(70-72)	FAN TO ALTERNATOR	-	12B1421	0372232
LONG						
260	UTB 2-CYL. 95	(80-86)	FAN TO ALTERNATOR	-	-	0373225
310	UTB 2-CYL. 110	(80-90)	FAN TO ALTERNATOR	-	-	0373225
350	UTB 3-CYL. 143	(74-76)	FAN TO ALTERNATOR	-	-	0173224
360	UTB 3-CYL. 143	(77-94)	FAN TO ALTERNATOR	-	-	0173224
445	UTB 3-CYL. 143	(72-76)	FAN TO ALTERNATOR	-	-	0173224
460	UTB 3-CYL. 143	(77-94)	FAN TO ALTERNATOR	-	-	0173224
510	UTB 3-CYL. 165	(79-90)	FAN TO ALTERNATOR	-	-	0173224
560	UTB 4-CYL. 191	(76-79)	FAN TO ALTERNATOR	-	-	0173244
610	UTB 4-CYL. 219	(79-94)	FAN TO ALTERNATOR	-	-	0173224
900	ZETOR 4-CYL. 278	(74-77)	FAN TO ALTERNATOR	-	-	0372232
910	ZETOR 4-CYL. 278	(78-83)	FAN TO ALTERNATOR	-	-	0372232
1100	ZETOR 4-CYL. 278	(75-77)	AIR CONDITIONING	-	-	0372232
		(75-77)	FAN TO ALTERNATOR	-	-	0173235

1110	ZETOR 4-CYL. 278	(78-79)	AIR CONDITIONING	-	-	0372223
		(78-79)	FAN TO ALTERNATOR	-	-	0372232
1310	ZETOR 6-CYL. 417	(78-83)	AIR CONDITIONING	-	-	0372223
		(78-83)	FAN TO ALTERNATOR	-	-	0372232
FARMTRAC 45	FORD 3-CYL. 175	(99-00)	FAN TO ALTERNATOR	-	1405	0273215
FARMTRAC 60	FORD 3-CYL. 192	(97-03)	FAN TO ALTERNATOR	-	1405	0273215
LANDTRAC 280	MITSUBISHI 4-CYL. 92	(98-00)	FAN TO ALTERNATOR	-	MD041704	0173210
LANDTRAC 360	MITSUBISHI 4-CYL. 107	(98-03)	FAN TO ALTERNATOR	-	MD041704	0173210
R9500	PERKINS 6-CYL. 354	(72-75)	FAN TO ALTERNATOR	-	-	0272247
MAHINDRA						
2815	MAHINDRA 3-CYL. 91	(05-08)	FAN	-	-	0172206
3215	MAHINDRA 3-CYL. 91	(05-07)	FAN	-	-	0172206
4500	MAHINDRA 3-CYL. 146	(00-05)	FAN TO ALTERNATOR	-	2032500000	0372223
4530	MAHINDRA 3-CYL. 146	(06-08)	FAN TO ALTERNATOR	-	2032500000	0372223
5500	MAHINDRA 4-CYL. 186	(03-07)	FAN TO ALTERNATOR	-	2032500000	0372223
6000	MAHINDRA 4-CYL. 195	(99-07)	FAN TO ALTERNATOR	-	2032500000	0372223
6500	MAHINDRA 4-CYL. 216	(03-07)	FAN TO ALTERNATOR	-	2032500000	0372223
MASSEY FERGUSON						
25	PERKINS 4-CYL. 107	(63-65)	FAN TO ALTERNATOR	-	966427M1	0272210
30	CONTINENTAL 4-CYL. 212	(70-76)	FAN TO ALTERNATOR	-	843198M1	0172235
	PERKINS 4-CYL. 203	(70-76)	FAN TO ALTERNATOR	-	186976M1	0422134
35	CONTINENTAL 4-CYL. 134	(60-63)	FAN TO ALTERNATOR/GENERATOR	-	509572M1	0172217
	PERKINS 3-CYL. 153	(60-63)	FAN TO ALTERNATOR/GENERATOR	-	186976M1	0422134
40	CONTINENTAL 4-CYL. 134	(56-84)	FAN TO ALTERNATOR	-	517456M1	0372231
	PERKINS 3-CYL. 153	(56-84)	FAN TO ALTERNATOR	-	517456M1	0372231
50	CONTINENTAL 4-CYL. 134	(58-65)	FAN TO ALTERNATOR	-	513890M1	0172221
		(58-65)	FAN TO GENERATOR	-	509572M1	0172217
	PERKINS 3-CYL. 153	(58-65)	FAN TO ALTERNATOR/GENERATOR	-	189789M1	0172228
65	CONTINENTAL 4-CYL. 176	(57-65)	FAN TO ALTERNATOR/GENERATOR	-	184526M1	0172219
	PERKINS 4-CYL. 203	(57-65)	FAN TO ALTERNATOR/GENERATOR	-	186750M2	0130307
85	CONTINENTAL 4-CYL. 242	(58-62)	FAN TO GENERATOR	-	185223M1	1472236
	PERKINS 4-CYL. 242	(58-61)	FAN TO GENERATOR	-	190083M1	0372232
88	CONTINENTAL 4-CYL. 276	(59-62)	FAN TO GENERATOR	-	185223M1	1472236
	PERKINS 4-CYL. 277	(59-62)	FAN TO GENERATOR	-	190083M1	0372232
90	CONTINENTAL 4-CYL. 242	(62-65)	FAN TO GENERATOR	-	185223M1	1472236
	PERKINS 4-CYL. 302	(62-65)	FAN TO GENERATOR	-	190083M1	0372232
135	CONTINENTAL 4-CYL. 145	(64-75)	FAN TO GENERATOR	-	509572M1	0172217
	PERKINS 3-CYL. 152	(64-75)	FAN TO ALTERNATOR	SPECIAL; |→ SERIAL No. 9A38905	843198M1	0172235
				─ RCHARD STYLE; |→ SERIAL No. 9A38905	517456M1	0372231
		(69-75)	FAN TO GENERATOR	-	509572M1	0172217
				→| SERIAL No. 9A38904	186976M1	0422134
150	CONTINENTAL 4-CYL. 145	(64-75)	FAN TO GENERATOR	-	509572M1	0172217
	CONTINENTAL 4-CYL. 152	(64-75)	FAN TO GENERATOR	-	509572M1	0172217
	PERKINS 3-CYL. 153	(64-75)	FAN TO ALTERNATOR	-	517344M1	1472238
		(64-75)	FAN TO GENERATOR	-	186976M1	0422134
165	CONTINENTAL 4-CYL. 176	(64-75)	FAN TO GENERATOR	-	189789M1	0172228
	PERKINS 4-CYL. 204	(64-75)	FAN TO ALTERNATOR	-	186976M1	0422134
		(64-75)	FAN TO GENERATOR	-	186750M2	0130307
	PERKINS 4-CYL. 212	(64-75)	FAN TO GENERATOR	-	189789M1	0172228

175	CONTINENTAL 4-CYL. 206	(64-75)	FAN TO GENERATOR	-	189789M1	0172228
	PERKINS 4-CYL. 236	(64-75)	FAN TO ALTERNATOR	-	513833M1	0172235
				-	843198M1	0172235
		(64-75)	FAN TO GENERATOR	→I SERIAL No. 9A40276	186750M2	0130307
				I→ SERIAL No. 9A40277	190083M1	0372232
180	CONTINENTAL 4-CYL. 206	(64-75)	FAN TO GENERATOR	-	505995M2	0172220
	PERKINS 4-CYL. 236	(65-75)	FAN TO GENERATOR	-	186976M1	0422134
				→I SERIAL No. 9A40276	186750M2	0130307
				I→ SERIAL No. 9A40277	512951M1	0372231
205	TOYOSHA 2-CYL. 65	(78-84)	FAN TO GENERATOR	-	3281495M1	0172206
210	TOYOSHA 2-CYL. 77	(78-84)	FAN TO ALTERNATOR	-	3280157M1	1272212
220	TOYOSHA 2-CYL. 90	(78-84)	FAN TO ALTERNATOR	-	3280157M1	1272212
230	CONTINENTAL 4-CYL. 145	(76-83)	FAN TO ALTERNATOR	-	539735M1	0172219
	PERKINS 3-CYL. 153	(76-83)	FAN TO ALTERNATOR	-	531371M1	0172235
235	CONTINENTAL 4-CYL. 145	(75-76)	FAN TO ALTERNATOR	-	539735M1	0172219
	PERKINS 3-CYL. 153	(75-76)	FAN TO ALTERNATOR	-	531371M1	0172235
240	PERKINS 3-CYL. 153	(83-99)	FAN TO ALTERNATOR	-	1682680M1	0372232
245	CONTINENTAL 4-CYL. 145	(76-83)	FAN TO ALTERNATOR	-	539735M1	0172219
	PERKINS 3-CYL. 153	(76-83)	FAN TO ALTERNATOR	-	531371M1	0172235
250	PERKINS 3-CYL. 152	(83-86)	FAN TO ALTERNATOR	-	1682680M1	0372232
253	PERKINS 3-CYL. 153	(88-98)	FAN TO ALTERNATOR	-	-	0372223
254	PERKINS 3-CYL. 153	(82-87)	FAN TO ALTERNATOR	-	1446203M1	0422134
255	CONTINENTAL 4-CYL. 212	(75-82)	FAN TO ALTERNATOR	-	531371M1	0172235
	PERKINS 4-CYL. 203	(75-82)	FAN TO ALTERNATOR	-	532527M1	0422134
	PERKINS 4-CYL. 236	(75-82)	FAN TO ALTERNATOR	-	517344M2	1472238
265	PERKINS 4-CYL. 236	(75-83)	FAN TO ALTERNATOR	-	517344M2	1472238
270	PERKINS 4-CYL. 236	(83-86)	FAN TO ALTERNATOR	-	1809095M2	0272247
274	PERKINS 4-CYL. 236	(82-87)	FAN TO ALTERNATOR	-	1446980M1	1472227
275	PERKINS 4-CYL. 248	(75-83)	FAN TO ALTERNATOR	-	517344M2	1472238
285	PERKINS 4-CYL. 318	(74-82)	FAN TO ALTERNATOR	-	532779M92	0372232
290	PERKINS 4-CYL. 248	(83-86)	FAN TO ALTERNATOR	-	517344M2	1472238
294	PERKINS 4-CYL. 248	(82-89)	FAN TO ALTERNATOR	-	1446980M1	1472227
304	CONTINENTAL 4-CYL. 193	(62-66)	FAN TO GENERATOR	-	509572M1	0172217
	PERKINS 4-CYL. 203	(62-66)	FAN TO ALTERNATOR	-	512747M1	1472236
		(62-66)	FAN TO GENERATOR	-	186750M1	0130307
356	CONTINENTAL 4-CYL. 193	(61-66)	FAN TO GENERATOR	-	509572M1	0172217
	PERKINS 4-CYL. 203	(61-66)	FAN TO GENERATOR	-	186750M2	0130307
362	PERKINS 4-CYL. 236	(90-98)	FAN TO ALTERNATOR	-	3612115M1	0172225
374	PERKINS 4-CYL. 236	(89-99)	FAN TO ALTERNATOR	-	3637595M1	0372223
				-	3637597M1	1472227
375	PERKINS 4-CYL. 236	(87-98)	AIR CONDITIONING	-	1690692M1	0172214
		(87-98)	FAN TO ALTERNATOR	-	1693745M1	0272247
383	PERKINS 4-CYL. 248	(86-98)	AIR CONDITIONING	-	1690692M1	0172214
		(86-98)	FAN TO ALTERNATOR	-	1693745M1	0272247
384	PERKINS 4-CYL. 236	(89-98)	FAN TO ALTERNATOR	-	3637595M1	0372223
				-	3637597M1	1472227
390	PERKINS 4-CYL. 248	(87-98)	AIR CONDITIONING	-	-	0272215
		(87-98)	FAN TO ALTERNATOR	-	-	0272247
393	PERKINS 4-CYL. 236	(92-98)	FAN TO ALTERNATOR	-	3381364M91	0122155
396	PERKINS 6-CYL. 365	(92-98)	FAN TO ALTERNATOR	-	3381364M91	0122155

398	PERKINS 4-CYL. 236	(87-97)	AIR CONDITIONING	-	-	0172206
		(87-97)	FAN TO ALTERNATOR	+ 1/2" BELT TOP WIDTH	-	0272247
				+ 25/64" BELT TOP WIDTH	1686615M91	0173249
399	PERKINS 6-CYL. 354	(87-90)	FAN TO ALTERNATOR	-	-	0372244
	PERKINS 6-CYL. 365	(91-98)	FAN TO ALTERNATOR	-	-	0372244
563	PERKINS 3-CYL. 202	(06-08)	FAN	-	3637306M91	0372232
670	PERKINS 4-CYL. 236	(83-86)	FAN TO AIR CONDITIONING	-	-	1272212
		(83-86)	FAN TO ALTERNATOR	-	1686614M91	0173240
690	PERKINS 4-CYL. 248	(83-86)	FAN TO AIR CONDITIONING	-	-	1272212
		(83-86)	FAN TO ALTERNATOR	-	1686614M91	0173240
698	PERKINS 4-CYL. 318	(83-86)	AIR CONDITIONING	-	-	0272215
		(83-86)	FAN TO ALTERNATOR	-	1686615M91	0173249
1001	CONTINENTAL 4-CYL. 208	(58-61)	FAN TO GENERATOR	-	764926M1	0172219
1010	TOYOSHA 3-CYL. 53	(82-94)	FAN TO ALTERNATOR	-	3284081M1	0372204
1020	TOYOSHA 3-CYL. 69	(83-94)	FAN TO ALTERNATOR	-	-	0172208
1030	TOYOSHA 3-CYL. 87	(84-94)	FAN TO ALTERNATOR	-	-	0272215
1035	TOYOSHA 3-CYL. 92	(86-91)	FAN TO ALTERNATOR	-	-	0172221
1045	TOYOSHA 3-CYL. 122	(86-91)	FAN TO ALTERNATOR	-	-	0272218
1080	PERKINS 4-CYL. 318	(67-72)	AIR CONDITIONING	-	522063M1	0172219
		(67-72)	FAN TO ALTERNATOR	+ AIR CONDITIONING	522061M91	0173253
				− AIR CONDITIONING	516467M1	1472251
1085	PERKINS 4-CYL. 318	(72-79)	FAN TO ALTERNATOR	-	529900M91	0373251
1100	PERKINS 6-CYL. 354	(64-72)	AIR CONDITIONING	-	521110M1	0172216
		(64-72)	FAN TO ALTERNATOR	-	513133M1	0372245
				-	517951M91	0173247
				-	521398M91	0173247
	WAUKESHA 6-CYL. 320	(64-72)	FAN TO ALTERNATOR	-	513116M1	0372240
1105	PERKINS 6-CYL. 354	(72-79)	AIR CONDITIONING	-	529964M1	0272218
		(72-79)	FAN TO ALTERNATOR	-	517951M91	0173247
1130	PERKINS 6-CYL. 354	(64-72)	AIR CONDITIONING	-	521110M1	0172216
		(64-72)	FAN TO ALTERNATOR	→I SERIAL No. 9B13589 ; + SINGLE BELT	503727M1	0372244
				I→ SERIAL No. 9B13590 ; + SINGLE BELT	513133M1	0372245
				+ DUAL BELTS	517951M91	0173247
1135	PERKINS 6-CYL. 354	(72-78)	FAN TO ALTERNATOR	-	517951M91	0173247
1140	ISEKI 3-CYL. 91	(91-92)	FAN TO ALTERNATOR	-	62136710070	0272210
1145	ISEKI 3-CYL. 91	(91-92)	FAN TO ALTERNATOR	-	62136710070	0272210
1150	PERKINS V-8 511	(67-72)	AIR CONDITIONING	-	521370M1	0172225
		(67-72)	FAN TO ALTERNATOR	+ AIR CONDITIONING	518505M1	0372199
				− AIR CONDITIONING	518506M92	1573238
		(67-72)	IDLER	-	521411M2	0173240
1155	PERKINS V-8 540	(72-78)	ALTERNATOR	− AIR CONDITIONING	518505M1	0372199
		(72-78)	FAN	-	518506M92	1573238
		(72-78)	ALTERNATOR TO AIR CONDITIONING	-	521370M1	0172225
1500	CATERPILLAR V-8 573	(71-74)	AIR CONDITIONING	-	530329M1	0372203
				-	533902M1	0172208
		(71-74)	ALTERNATOR	-	-	0372258
		(71-74)	FAN	-	525833M1	0172228
		(71-74)	WATER PUMP	-	530328M1	1272212

1505	CATERPILLAR V-8 636	(74-77)	AIR CONDITIONING	-	530329M1	0372203
				-	533902M1	0172208
		(74-77)	ALTERNATOR	-	-	0372258
		(74-77)	FAN	-	525833M1	0172228
		(74-77)	WATER PUMP	-	530328M1	1272212
1528	ISEKI 3-CYL. 89	(05-06)	ALTERNATOR	-	-	1272212
1540	ISEKI 3-CYL. 91	(05-06)	ALTERNATOR	-	-	1272212
1560	ISEKI 4-CYL. 180	(06-08)	FAN	-	-	0172220
1800	CATERPILLAR V-8 636	(71-74)	AIR CONDITIONING	-	530329M1	0372203
				-	533902M1	0172208
		(71-74)	ALTERNATOR	-	-	0372258
		(71-74)	FAN	-	525833M1	0172228
		(71-74)	WATER PUMP	-	530328M1	1272212
1805	CATERPILLAR V-8 636	(74-78)	AIR CONDITIONING	-	530329M1	0372203
				-	533902M1	0172208
		(74-78)	ALTERNATOR	-	-	0372258
		(74-78)	FAN	-	525833M1	0172228
		(74-78)	WATER PUMP	-	530328M1	1272212
2640	PERKINS 6-CYL. 354	(82-83)	AIR CONDITIONING	-	-	0172225
		(82-83)	ALTERNATOR	-	-	0172211
		(82-83)	FAN	-	3045111M91	0272247
		(82-83)	FAN TO ALTERNATOR	-	-	0122155
2675	PERKINS 6-CYL. 354	(78-83)	AIR CONDITIONING	-	1614371M1	0372223
		(78-83)	FAN	-	3045111M1	0272247
		(78-83)	WATER PUMP TO ALTERNATOR	→I SERIAL No. 9R8413	3320327M1	0172211
				I→ SERIAL No. 9R8414	3040366M1	0172211
2705	PERKINS 6-CYL. 354	(78-83)	AIR CONDITIONING	→I SERIAL No. 9R5659	-	0172220
				I→ SERIAL No. 9R5660	3324169M1	1472227
2745	PERKINS V-8 539	(78-83)	AIR CONDITIONING	-	3038999M1	1472238
		(78-83)	FAN	-	1613267M1	0172253
		(78-83)	FAN TO ALTERNATOR	-	1613293M1	1573238
2770	PERKINS V-8 640	(77-83)	AIR CONDITIONING	-	3038999M1	1472238
		(77-83)	FAN	-	1613267M1	0172253
		(77-83)	FAN TO ALTERNATOR	-	1613293M1	1573238
2775	PERKINS V-8 640	(78-83)	AIR CONDITIONING	-	3038999M1	1472238
		(78-83)	FAN	-	1613267M1	0172253
		(78-83)	FAN TO ALTERNATOR	-	1613293M1	1573238
2800	PERKINS V-8 640	(76-77)	AIR CONDITIONING	-	3038999M1	1472238
		(76-77)	FAN	-	1613267M1	0172253
		(76-77)	FAN TO ALTERNATOR	-	1613293M1	1573238
2805	PERKINS V-8 640	(78-83)	AIR CONDITIONING	-	3038999M1	1472238
		(78-83)	FAN	-	1613267M1	0172253
		(78-83)	FAN TO ALTERNATOR	-	1613293M1	1573238
3090	PERKINS 6-CYL. 354	(87-91)	FAN TO AIR CONDITIONING	-	-	0172219
		(87-91)	FAN TO ALTERNATOR	-	-	0122155
3120	PERKINS 6-CYL. 365	(90-93)	FAN TO AIR CONDITIONING	-	-	0172228
3505	PERKINS 6-CYL. 354	(84-87)	AIR CONDITIONING	-	-	0172225
		(84-87)	FAN TO ALTERNATOR	-	3040966M1	0172211
				-	3045111M91	0272247
3525	PERKINS 6-CYL. 354	(84-87)	AIR CONDITIONING	-	-	0172225
		(84-87)	FAN TO ALTERNATOR	-	3045111M91	0272247

3545	PERKINS 6-CYL. 354	(84-87)	AIR CONDITIONING	-	-	0172225
		(84-87)	FAN TO ALTERNATOR	-	3045111M91	0272247
3625	SISU 3-CYL. 201	(07)	FAN TO ALTERNATOR	→| SERIAL No. S13002	VA205892	0372232
3660	PERKINS 6-CYL. 365	(90-95)	FAN TO AIR CONDITIONING	-	-	0372223
		(90-95)	FAN TO ALTERNATOR	-	-	0372257
4243	PERKINS 4-CYL. 244	(97-01)	AIR CONDITIONING	-	1686883M1	0272218
		(97-01)	ALTERNATOR	-	-	0172235
4800	CUMMINS V-8 903	(80-86)	AIR CONDITIONING	→| SERIAL No. 9D004000	595851M1	0372242
				|→ SERIAL No. 9D004001	512431M1	0372245
		(80-86)	FAN TO ALTERNATOR	→| SERIAL No. 9D003701	517456M1	0372231
				|→ SERIAL No. 9D004281	517344M1	1472238
				SERIAL No. 9D3702 → 9D004280	513833M1	0172235
4840	CUMMINS V-8 903	(78-86)	AIR CONDITIONING	→| SERIAL No. 9D004000	595851M1	0372242
				|→ SERIAL No. 9D004001	512431M1	0372245
		(78-86)	FAN TO ALTERNATOR	→| SERIAL No. 9D003701	517456M1	0372231
				|→ SERIAL No. 9D004281	517344M1	1472238
				SERIAL No. 9D3702 → 9D004280	513833M1	0172235
4880	CUMMINS V-8 903	(78-86)	AIR CONDITIONING	→| SERIAL No. 9D004000	595851M1	0372242
				|→ SERIAL No. 9D004001	512431M1	0372245
		(78-86)	FAN TO ALTERNATOR	→| SERIAL No. 9D003701	517456M1	0372231
				|→ SERIAL No. 9D004281	517344M1	1472238
				SERIAL No. 9D3702 → 9D004280	513833M1	0172235
4900	CUMMINS V-8 903	(80-86)	AIR CONDITIONING	→| SERIAL No. 9D004000	595851M1	0372242
				|→ SERIAL No. 9D004001	512431M1	0372245
		(80-86)	FAN TO ALTERNATOR	→| SERIAL No. 9D003701	517456M1	0372231
				|→ SERIAL No. 9D004281	517344M1	1472238
				SERIAL No. 9D3702 → 9D004280	513833M1	0172235
5200	CUMMINS 6-CYL. 855	(89-93)	ALTERNATOR	-	-	0372244
		(89-93)	FAN	-	-	0372232
		(89-93)	FAN TO AIR CONDITIONING	-	-	0372262
	DETROIT 6-CYL. 774	(89-93)	ALTERNATOR	-	-	0372244
		(89-93)	FAN	-	-	0372232
		(89-93)	FAN TO AIR CONDITIONING	-	-	0372262
5435	PERKINS 4-CYL. 268	(04-05)	FAN TO ALTERNATOR	EXC. HIGH VISIBILITY TRACTOR	4274693M91	0372244
				EXC. HIGH VISIBILITY TRACTOR; →| SERIAL No. R033030	4274693M91	0372244
				FOR HIGH VISIBILITY TRACTOR	3777681M91	0172235
				-	3780604M91	0372232
				FOR HIGH VISIBILITY TRACTOR; →| SERIAL No. R012051	3777681M91	0172235
				FOR HIGH VISIBILITY TRACTOR; |→ SERIAL No. R012052	3780604M91	0372232
	PERKINS 4-CYL. 269	(08)	FAN TO ALTERNATOR	FOR HIGH VISIBILITY TRACTOR	3780604M91	0372232

5465	PERKINS 6-CYL. 365	(06)	AIR CONDITIONING	-	4272496M1	0372231
				+ V-BELT DRIVE	4272496M1	0372231
		(06)	FAN	-	3780606M91	0372242
				+ V-BELT DRIVE	3780606M91	0372242
		(07)	SERPENTINE - AIR CONDITIONING	+ AIR BRAKE COMPRESSOR	4281725M1	1984281
	PERKINS 6-CYL. 6.6 L	(08)	SERPENTINE - AIR CONDITIONING	+ AIR BRAKE COMPRESSOR	4281725M1	1984281
6485	SISU 6-CYL. 402	(04-06)	SERPENTINE - ACCESSORY DRIVE	+ 120A. ALTERNATOR	4273187M1	2785290
				+ 150A. ALTERNATOR	4273188M1	0285291
6490	SISU 6-CYL. 402	(04-06)	SERPENTINE - ACCESSORY DRIVE	+ 120A. ALTERNATOR	4273187M1	2785290
7495	SISU 6-CYL. 402	(04-07)	SERPENTINE - FAN TO ALTERNATOR	+ 120A. ALTERNATOR	4273187M1	2785290
				+ 150A. ALTERNATOR	4273188M1	0285291
154-4	PERKINS 3-CYL. 153	(80-81)	FAN TO ALTERNATOR	|→ SERIAL No. 2612418	1446203M1	0422134
184-4	PERKINS 4-CYL. 236	(76-81)	FAN TO GENERATOR	-	1446980M1	1472227
20 INDUSTRIAL	PERKINS 3-CYL. 152	(66-76)	FAN TO ALTERNATOR	-	517456M1	0372231
	PERKINS 3-CYL. 153	(66-76)	FAN TO ALTERNATOR	-	517456M1	0372231
202 INDUSTRIAL	CONTINENTAL Z134	(58-67)	FAN TO ALTERNATOR	-	509572M1	0172217
	PERKINS 3-CYL. 152	(58-67)	FAN TO ALTERNATOR	-	509572M1	0172217
203 INDUSTRIAL	PERKINS 3-CYL. 152	(61-67)	FAN TO ALTERNATOR	-	186976M1	0422134
204 INDUSTRIAL	PERKINS 3-CYL. 152	(59-67)	FAN TO ALTERNATOR	-	509572M1	0172217
205 INDUSTRIAL	TOYOSHA 2-CYL. 65	(61-69)	FAN TO GENERATOR	-	186976M1	0422134
205-4	TOYOSHA 2-CYL. 65	(78)	FAN TO ALTERNATOR	-	3280157M1	1272212
		(78-84)	FAN TO GENERATOR	-	3281495M1	0172206
20C INDUSTRIAL	PERKINS 3-CYL. 152	(76-82)	FAN TO ALTERNATOR	-	539735M1	0172219
	PERKINS 3-CYL. 153	(76-82)	FAN TO ALTERNATOR	-	531371M1	0172235
20C TURF	PERKINS 3-CYL. 153	(75-76)	FAN TO ALTERNATOR	-	843198M1	0172235
20D INDUSTRIAL	PERKINS 3-CYL. 153	(83-92)	FAN TO ALTERNATOR	-	1682680M1	0372232
210-4	TOYOSHA 2-CYL. 77	(79-84)	FAN TO ALTERNATOR	-	3280157M1	1272212
2135 TURF	PERKINS 3-CYL. 153	(64-68)	FAN TO GENERATOR	-	186976M1	0422134
	PERKINS 4-CYL. 134	(64-68)	FAN TO ALTERNATOR	-	509572M1	0172217
		(64-68)	FAN TO GENERATOR	-	181523M1	0272218
2135 UTILITY	PERKINS 3-CYL. 153	(64-68)	FAN TO GENERATOR	-	186976M1	0422134
	PERKINS 4-CYL. 134	(64-68)	FAN TO ALTERNATOR	-	509572M1	0172217
		(64-68)	FAN TO GENERATOR	-	181523M1	0272218
2200 INDUSTRIAL	PERKINS 3-CYL. 152	(65-70)	FAN TO GENERATOR	-	186976M1	0422134
	PERKINS 4-CYL. 134	(65-70)	FAN TO ALTERNATOR	-	509572M1	0172217
		(65-70)	FAN TO GENERATOR	-	181523M1	0272218
220-4	TOYOSHA 2-CYL. 90	(78-84)	FAN TO ALTERNATOR	-	3280157M1	1272212
231 SPECIAL	PERKINS 3-CYL. 153	(89-99)	FAN TO ALTERNATOR	-	773300M1	0172225
283 SPECIAL	PERKINS 4-CYL. 248	(85-98)	FAN TO ALTERNATOR	-	532779M92	0372232
30 INDUSTRIAL	PERKINS 4-CYL. 212	(70-72)	FAN TO ALTERNATOR	-	531371M1	0172235
302 INDUSTRIAL	CONTINENTAL 4-CYL. 193	(62-66)	FAN TO GENERATOR	-	509572M1	0172217
	PERKINS 4-CYL. 203	(62-66)	FAN TO ALTERNATOR	-	512747M1	1472236
		(62-66)	FAN TO GENERATOR	-	186750M1	0130307
303 INDUSTRIAL	PERKINS 4-CYL. 208	(58-60)	HYDRAULIC PUMP	-	-	0172225
		(58-60)	FAN TO GENERATOR	-	764926M1	0172219
30B INDUSTRIAL	CONTINENTAL 4-CYL. 162	(76-82)	FAN TO ALTERNATOR	-	539735M1	0172219
	PERKINS 4-CYL. 212	(76-82)	FAN TO ALTERNATOR	-	531371M1	0172235
31 INDUSTRIAL	PERKINS 4-CYL. 236	(73-77)	FAN TO ALTERNATOR	-	513833M1	0172235

3165 INDUSTRIAL	CONTINENTAL 4-CYL. 176	(64-67)	FAN TO GENERATOR	-	189789M1	0172228
	PERKINS 4-CYL. 203	(64-67)	FAN TO GENERATOR	-	189789M1	0172228
390T	PERKINS 4-CYL. 236	(89-98)	AIR CONDITIONING	-	-	0172206
		(89-98)	FAN TO ALTERNATOR	-	1686615M91	0173249
40B INDUSTRIAL	PERKINS 3-CYL. 153	(76-82)	FAN TO ALTERNATOR	-	517344M2	1472238
50 INDUSTRIAL	CONTINENTAL 4-CYL. 193	(69-76)	FAN TO ALTERNATOR	-	513890M1	0172221
		(69-76)	FAN TO GENERATOR	-	509572M1	0172217
	PERKINS 4-CYL. 203	(69-76)	FAN TO ALTERNATOR	-	843198M1	0172235
		(69-76)	FAN TO GENERATOR	-	186750M2	0130307
50C INDUSTRIAL	PERKINS 4-CYL. 236	(76-83)	FAN TO ALTERNATOR	-	517344M2	1472238
50D INDUSTRIAL	PERKINS 4-CYL. 236	(76-83)	FAN TO ALTERNATOR	-	517344M2	1472238
50F	PERKINS 3-CYL. 184	(83-87)	FAN TO ALTERNATOR	-	1446201M1	0372232
8450 TRACTOR	SISU 6-CYL. 451	(05-06)	SERPENTINE - FAN TO ALTERNATOR	-	4275919M1	1485304
8460 TRACTOR	SISU 6-CYL. 451	(05-06)	SERPENTINE - FAN TO ALTERNATOR	-	4275919M1	1485304
GC2300	ISEKI 3-CYL. 68	(02-08)	FAN	-	-	0573202
GC2310	ISEKI 3-CYL. 68	(03-08)	FAN	-	-	0573202
MF200	PERKINS 3-CYL. 153	(66-76)	FAN	-	508560M1	0172206
		(66-76)	FAN TO ALTERNATOR	-	508588M2	0372197
MF200B	PERKINS 3-CYL. 153	(76-77)	FAN	-	2740015M1	0172192
MF2244	PERKINS 3-CYL. 153	(67-71)	FAN	-	508560M1	0172206
		(67-71)	FAN TO ALTERNATOR	-	508588M2	0372197
MF300	PERKINS 4-CYL. 248	(69-77)	FAN TO ALTERNATOR	→| SERIAL No. 248UA14402L	-	0172225
				SERIAL No. 248UA17092 → 248UA88561	1446046M1	0273228
				|→ SERIAL No. 248UA88561	-	0173225
MASSEY HARRIS						
33	MASSEY HARRIS 4-CYL. 201	(52-55)	FAN TO GENERATOR	-	764926M1	0172219
44	MASSEY HARRIS 4-CYL. 259	(46-55)	FAN TO GENERATOR	-	767356M1	0422134
333	MASSEY HARRIS 4-CYL. 208	(56-58)	FAN TO GENERATOR	-	764926M1	0172219
444	MASSEY HARRIS 4-CYL. 277	(56-58)	FAN TO GENERATOR	-	767356M1	0422134
	MASSEY HARRIS 4-CYL. 277 LPG	(56-58)	FAN TO GENERATOR	-	767356M1	0422134
33D	MASSEY HARRIS 4-CYL. 201	(52-55)	FAN TO GENERATOR	-	764926M1	0172219
44D	MASSEY HARRIS 4-CYL. 259	(46-55)	FAN TO GENERATOR	-	767356M1	0422134
PACER 16	CONTINENTAL 4-CYL. 91	(54-57)	FAN TO GENERATOR	-	852175M1	2501076
MITSUBISHI-SATOH						
BEAVER 3	MITSUBISHI 3-CYL. 47	(80-84)	FAN TO ALTERNATOR	-	-	0173209
BISON	MAZDA 4-CYL. 60	(77-83)	FAN TO ALTERNATOR	-	-	0173212
BUCK	MITSUBISHI 3-CYL. 52	(78-89)	FAN TO ALTERNATOR	-	-	0173199
BULL	MITSUBISHI 2-CYL. 76	(78-89)	FAN TO ALTERNATOR	-	-	0173212
MT180	MITSUBISHI 3-CYL. 55	(84-91)	FAN TO ALTERNATOR	-	MD007528	0173208
MT210	MITSUBISHI 3-CYL. 60	(84-91)	FAN TO ALTERNATOR	-	MD007528	0173208
MT372	MITSUBISHI 2-CYL. 41	(81-89)	FAN TO ALTERNATOR	-	MD030768	0173205
MT4501	MITSUBISHI 4-CYL. 127	(85-91)	FAN TO ALTERNATOR	-	-	0272215
R1500	MITSUBISHI SDT75	(72)	FAN TO GENERATOR	-	K7974241	0172216
R2500	MITSUBISHI 2-CYL. 73	(72)	FAN TO GENERATOR	-	K7974241	0172216
S550G	MAZDA 4-CYL. 60	(70-74)	FAN TO ALTERNATOR	-	-	0173218
		(70-74)	WATER PUMP TO GOVERNOR	-	-	0173217

S650G	MAZDA 4-CYL. 60	(72-77)	FAN TO ALTERNATOR	-	180190	0173217
				-	180200	0173220
		(72-77)	GOVERNOR	-	180190	0173217
				-	180200	0173220
STALLION	ISUZU 3-CYL. 108	(77-84)	FAN TO ALTERNATOR	-	4136713030	0172214
MONTANA TRACTORS						
3040	MITSUBISHI 4-CYL. 92	(05-08)	FAN	-	-	0173210
R2844	MITSUBISHI 4-CYL. 153	(08)	FAN	-	-	0173210
	MITSUBISHI 4-CYL. 92	(06-07)	FAN	-	-	0173210
T2334	MITSUBISHI 3-CYL. 69	(06-08)	FAN	-	-	0173210
MUIR-HILL						
110	PERKINS 6-CYL. 354	(71-73)	FAN TO ALTERNATOR	-	-	0172235
MULLER						
TM310	CUMMINS 6-CYL. 855	(90-93)	AIR CONDITIONING	-	-	0272215
		(90-93)	ALTERNATOR	-	-	0372232
		(90-93)	WATER PUMP	-	-	0173220
NEW HOLLAND						
9030	FORD 4-CYL. 268	(91-96)	AIR CONDITIONING	-	-	0172217
		(91-96)	FAN TO ALTERNATOR	-	9700204	0372244
9184	CUMMINS 6-CYL. 505	(00-01)	AIR CONDITIONING	-	86013676	1472227
9280	CUMMINS 6-CYL. 611	(94-96)	AIR CONDITIONING	-	9706589	1472236
				FEB. 1, 1995 I→ X	86514599	0272210
				JAN. 31, 1995 →I X	9706589	1472236
		(94-96)	ALTERNATOR	-	103579	2388232
		(94-96)	FAN	-	86001157	1385254
9282	CUMMINS 6-CYL. 505	(96-99)	AIR CONDITIONING	-	86013676	1472227
9384	CUMMINS M11	(00-01)	AIR CONDITIONING	-	86514599	0272210
		(00-01)	ALTERNATOR	-	103579	2388232
9480	CUMMINS 6-CYL. 855	(94-96)	AIR CONDITIONING	-	86514599	0272210
		(94-96)	ALTERNATOR	-	9707244	0172221
		(94-96)	WATER PUMP	-	86514607	2484242
9482	CUMMINS M11	(96-99)	AIR CONDITIONING	-	86514599	0272210
		(96-99)	ALTERNATOR	-	103579	2388232
9484	CUMMINS M11	(00-01)	AIR CONDITIONING	-	-	0272210
		(00-01)	ALTERNATOR	-	-	1588233
9680	CUMMINS 6-CYL. 855	(94-96)	AIR CONDITIONING	-	86514599	0272210
		(94-96)	ALTERNATOR	-	9707244	0172221
		(94-96)	WATER PUMP	-	86514607	2484242
9682	CUMMINS N14	(96-99)	AIR CONDITIONING	-	86514599	0272210
		(96-97)	ALTERNATOR	-	9707244	0172221
				SEPT. 7, 1998 →I X	9707244	0172221
		(96-99)	WATER PUMP	-	86514607	2484242
9684	CUMMINS N14	(00-01)	WATER PUMP	-	86514607	2484242
9880	CUMMINS 6-CYL. 855	(94-96)	AIR CONDITIONING	-	86514599	0272210
		(94-96)	ALTERNATOR	-	9707244	0172221
		(94-96)	WATER PUMP	-	86514607	2484242
9882	CUMMINS N14	(96-99)	AIR CONDITIONING	-	86514599	0272210
		(96-97)	ALTERNATOR	-	9707244	0172221
				SEPT. 7, 1998 →I X	9707244	0172221
		(96-99)	WATER PUMP	-	86514607	2484242
T6020	NEW HOLLAND 4-CYL. 274	(07-08)	AIR CONDITIONING	-	87802911	0342153
		(07-08)	FAN TO ALTERNATOR	-	4899178	2385277

TC18	SHIBAURA 3-CYL. 58	(98-03)	FAN TO ALTERNATOR	-	SBA080109049	0173195
TC21	NEW HOLLAND 3-CYL. 61	(04-05)	FAN TO ALTERNATOR	-	SBA080109049	0173195
	SHIBAURA 3-CYL. 61	(99-03)	FAN TO ALTERNATOR	-	-	0173195
TC23	NEW HOLLAND 3-CYL. 61	(06-07)	FAN TO ALTERNATOR	-	SBA080109049	0173195
TC24	NEW HOLLAND 3-CYL. 69	(04-05)	FAN TO ALTERNATOR	-	SBA080109049	0173195
	SHIBAURA 3-CYL. 69	(02-03)	FAN TO ALTERNATOR	-	-	0173205
TC26	NEW HOLLAND 3-CYL. 69	(06-07)	FAN TO ALTERNATOR	-	SBA080109049	0173195
TC29	NEW HOLLAND 3-CYL. 81	(04-06)	FAN TO ALTERNATOR	-	86517954	1400071
TC30	SHIBAURA 3-CYL. 91	(01-07)	FAN TO ALTERNATOR	-	-	0173205
TC31	NEW HOLLAND 3-CYL. 91	(06-07)	FAN TO ALTERNATOR	-	86517954	1400071
TC33	NEW HOLLAND 3-CYL. 91	(04-07)	FAN TO ALTERNATOR	-	86517954	1400071
	SHIBAURA 3-CYL. 91	(98-03)	FAN TO ALTERNATOR	-	-	0173205
TC34	NEW HOLLAND 3-CYL. 101	(06)	FAN TO ALTERNATOR	-	86517954	1400071
TC35	NEW HOLLAND 3-CYL. 101	(04-07)	FAN TO ALTERNATOR	-	301525A1	0172206
	SHIBAURA 3-CYL. 101	(02-03)	FAN TO ALTERNATOR	-	-	0173205
				-	-	0173240
TC40	NEW HOLLAND 4-CYL. 122	(04-07)	FAN TO ALTERNATOR	-	301525A1	0172206
	SHIBAURA 4-CYL. 122	(00-03)	FAN TO ALTERNATOR	-	-	0173205
TC45	NEW HOLLAND 4-CYL. 135	(04-07)	FAN TO ALTERNATOR	-	-	0172206
	SHIBAURA 4-CYL. 135	(00-03)	FAN TO ALTERNATOR	-	-	0173205
TC48	NEW HOLLAND 4-CYL. 135	(04-07)	FAN TO ALTERNATOR	-	86517954	1400071
TC55	NEW HOLLAND 4-CYL. 135	(04-07)	FAN TO ALTERNATOR	-	86517954	1400071
TD95D	NEW HOLLAND 4-CYL. 238	(07-08)	AIR CONDITIONING	-	5094418	0173217
		(07-08)	FAN	-	98473706	0173224
TG210	NEW HOLLAND 6-CYL. 8.3 L	(02-06)	FAN TO WATER PUMP	-	87403144	0385323
TG215	NEW HOLLAND 6-CYL. 8.3 L	(06-08)	FAN TO WATER PUMP	+ 8-BLADE FAN	87441270	0785326
TG230	NEW HOLLAND 6-CYL. 8.3 L	(02-06)	FAN TO WATER PUMP	-	87403144	0385323
TG245	NEW HOLLAND 6-CYL. 8.3 L	(06-08)	FAN TO WATER PUMP	+ 8-BLADE FAN	87441270	0785326
TG255	NEW HOLLAND 6-CYL. 8.3 L	(02-06)	FAN TO WATER PUMP	-	87403145	0285320
TG275	NEW HOLLAND 6-CYL. 8.3 L	(06-08)	FAN TO WATER PUMP	+ 8-BLADE FAN	87441270	0785326
TG285	NEW HOLLAND 6-CYL. 8.3 L	(02-06)	FAN TO WATER PUMP	-	87403145	0285320
TG305	NEW HOLLAND 6-CYL. 8.3 L	(06-08)	FAN TO WATER PUMP	+ 8-BLADE FAN	87441270	0785326
TJ275	NEW HOLLAND 6-CYL. 8.3 L	(02-06)	FAN TO ALTERNATOR	-	87443440	0785288
TJ280	NEW HOLLAND 6-CYL. 8.3 L	(06-08)	AIR CONDITIONING	-	A189040	0372223
		(06-08)	FAN TO WATER PUMP	-	87363088	0385289
TJ325	NEW HOLLAND 6-CYL. 543	(02-05)	FAN TO ALTERNATOR	-	87443440	0785288
TJ330	NEW HOLLAND 6-CYL. 543	(06-08)	WATER PUMP	-	87363088	0385289
TJ380	NEW HOLLAND 6-CYL. 787	(06-08)	FAN TO ALTERNATOR	-	504078066	0285348
TJ430	NEW HOLLAND 6-CYL. 787	(06-08)	WATER PUMP, ALTERNATOR TO AIR CONDITIONING	-	87282333	0285348
TJ480	CUMMINS 6-CYL. 915	(06-08)	ALTERNATOR TO AIR CONDITIONING	-	87366407	0384279
TJ530	CUMMINS 6-CYL. 915	(06-08)	ALTERNATOR TO AIR CONDITIONING	-	87366407	0384279
TK100A	NEW HOLLAND 4-CYL. 238	(04-08)	FAN TO ALTERNATOR	-	98473705	0173227
TK76	NEW HOLLAND 4-CYL. 220	(01-03)	FAN TO ALTERNATOR	-	98473705	0173227
TK80	NEW HOLLAND 4-CYL. 220	(04-05)	FAN TO ALTERNATOR	-	98473705	0173227
TK85	NEW HOLLAND 4-CYL. 238	(01-03)	FAN TO ALTERNATOR	-	98473705	0173227
TK90A	NEW HOLLAND 4-CYL. 238	(06-08)	AIR CONDITIONING	-	5154152	0172201
		(06-08)	FAN TO ALTERNATOR	-	98473705	0173227
TL100	IVECO 4-CYL. 238	(99-03)	FAN TO ALTERNATOR	+ 85A. ALTERNATOR	500369112	0373225
				− 85A. ALTERNATOR	98473705	0173227

TL100A	NEW HOLLAND 4-CYL. 273	(04-08)	AIR CONDITIONING	-	47129821	0172214
		(04-08)	FAN TO ALTERNATOR	− FAN CLUTCH	47131754	0285264
				+ VISCOUS FAN CLUTCH	47135840	0385263
TM115	NEW HOLLAND 6-CYL. 456	(00-02)	FAN TO ALTERNATOR	+ AIR CONDITIONING	87800858	0385306
				− AIR CONDITIONING	87840341	0385270
TM120	NEW HOLLAND 6-CYL. 456	(02-08)	FAN, ALTERNATOR TO AIR CONDITIONING	-	87802822	0385312
TM125	NEW HOLLAND 6-CYL. 456	(00-02)	FAN TO ALTERNATOR	+ AIR CONDITIONING	87800858	0385306
				− AIR CONDITIONING	87840341	0385270
TM130	NEW HOLLAND 6-CYL. 456	(02-08)	FAN, ALTERNATOR TO AIR CONDITIONING	-	87802822	0385312
TM135	NEW HOLLAND 6-CYL. 456	(00-02)	FAN TO ALTERNATOR	+ AIR CONDITIONING	87800858	0385306
				− AIR CONDITIONING	87840341	0385270
TM140	NEW HOLLAND 6-CYL. 456	(02-08)	FAN, ALTERNATOR TO AIR CONDITIONING	-	87802822	0385312
TM150	NEW HOLLAND 6-CYL. 456	(00-02)	FAN TO ALTERNATOR	+ AIR CONDITIONING	87800858	0385306
				− AIR CONDITIONING	87840341	0385270
TM155	NEW HOLLAND 6-CYL. 456	(02-08)	SERPENTINE	-	87802822	0385312
TM165	NEW HOLLAND 6-CYL. 456	(00-02)	FAN TO ALTERNATOR	+ AIR CONDITIONING	87800858	0385306
				− AIR CONDITIONING	87840341	0385270
TM175	NEW HOLLAND 6-CYL. 456	(02-08)	SERPENTINE	-	87802822	0385312
TM190	NEW HOLLAND 6-CYL. 456	(05-08)	SERPENTINE	-	87802822	0385312
		(02-04)	WATER PUMP, ALTERNATOR TO AIR CONDITIONING	-	87802822	0385312
TN55	IVECO 3-CYL. 179	(99-03)	FAN TO ALTERNATOR	-	98473705	0173227
TN60A	NEW HOLLAND 3-CYL. 179	(04-08)	FAN TO ALTERNATOR	-	98473705	0173227
TN60DA	NEW HOLLAND 3-CYL. 179	(04-08)	FAN TO ALTERNATOR	-	98473705	0173227
TN65	IVECO 3-CYL. 179	(99-03)	FAN TO ALTERNATOR	-	98473705	0173227
TN65F	IVECO 4-CYL. 238	(98-03)	AIR CONDITIONING	-	5154152	0172201
		(98-03)	FAN TO ALTERNATOR	-	98473705	0173227
TN70	IVECO 3-CYL. 179	(00-04)	FAN TO ALTERNATOR	-	98473705	0173227
TN70A	NEW HOLLAND 3-CYL. 179	(04-05)	FAN TO ALTERNATOR	-	98473705	0173227
TN70DA	NEW HOLLAND 3-CYL. 179	(04-08)	FAN TO ALTERNATOR	-	98473705	0173227
TN70F	NEW HOLLAND 4-CYL. 238	(03-05)	AIR CONDITIONING	-	5154152	0172201
		(03-05)	FAN TO ALTERNATOR	-	98473705	0173227
TN75	IVECO 3-CYL. 179	(99-03)	FAN TO ALTERNATOR	-	98473705	0173227
TN75A	NEW HOLLAND 3-CYL. 179	(04-08)	FAN TO ALTERNATOR	-	98473705	0173227
TN75DA	NEW HOLLAND 3-CYL. 179	(04-08)	FAN TO ALTERNATOR	-	98473705	0173227
TN75F	IVECO 4-CYL. 238	(98-03)	AIR CONDITIONING	-	5154152	0172201
		(98-03)	FAN TO ALTERNATOR	-	98473705	0173227
TN75FA	NEW HOLLAND 4-CYL. 238	(04-08)	AIR CONDITIONING	-	5154152	0172201
		(04-08)	FAN TO ALTERNATOR	-	98473705	0173227
TN75SA	NEW HOLLAND 3-CYL. 179	(04-08)	FAN TO ALTERNATOR	-	98473705	0173227
TN75VA	NEW HOLLAND 3-CYL. 179	(04-08)	FAN TO ALTERNATOR	-	98473705	0173227
TN80F	NEW HOLLAND 4-CYL. 238	(02-03)	AIR CONDITIONING	-	5154152	0172201
		(02-03)	FAN TO ALTERNATOR	-	98473705	0173227
TN85DA	NEW HOLLAND 4-CYL. 274	(06-08)	AIR CONDITIONING	-	47129821	0172214
		(06-08)	FAN	+ H.D. COOL.; + P.T.O.	47135840	0385263
				− H.D. COOL.; − P.T.O.	47131754	0285264
TN85FA	NEW HOLLAND 4-CYL. 238	(04-08)	AIR CONDITIONING	-	5154152	0172201
		(04-08)	FAN TO ALTERNATOR	-	98473705	0173227
TN90F	IVECO 4-CYL. 238	(98-01)	AIR CONDITIONING	-	5154152	0172201
		(98-01)	FAN TO ALTERNATOR	-	98473705	0173227

TN95F	NEW HOLLAND 4-CYL. 238	(02-05)	AIR CONDITIONING	-	5154152	0172201
		(02-05)	FAN TO ALTERNATOR	-	98473705	0173227
TN95FA	NEW HOLLAND 4-CYL. 238	(04-08)	AIR CONDITIONING	-	5154152	0172201
		(04-08)	FAN	-	98473705	0173227
TN95VA	NEW HOLLAND 4-CYL. 238	(05-08)	AIR CONDITIONING	-	5154152	0172201
		(05-08)	FAN	-	98473705	0173227
TS100	GENESIS 4-CYL. 304	(98-03)	FAN TO ALTERNATOR	-	82850752	0342140
TS100A	NEW HOLLAND 4-CYL. 273	(04-08)	AIR CONDITIONING	-	87802911	0342153
		(04-08)	FAN TO ALTERNATOR	-	4899178	2385277
TS110	GENESIS 4-CYL. 304	(98-03)	FAN TO ALTERNATOR	-	82850752	0342140
TS110A	NEW HOLLAND 4-CYL. 274	(07-08)	AIR CONDITIONING	-	87802911	0342153
		(07-08)	FAN	-	4899178	2385277
TS115A	NEW HOLLAND 6-CYL. 410	(04-08)	AIR CONDITIONING	-	87802911	0342153
		(04-08)	FAN TO ALTERNATOR	-	4899178	2385277
TS125A	NEW HOLLAND 6-CYL. 410	(04-08)	FAN TO AIR CONDITIONING	-	87802911	0342153
		(04-08)	FAN TO ALTERNATOR	-	4899178	2385277
TS135A	NEW HOLLAND 6-CYL. 410	(04-08)	AIR CONDITIONING	-	87802911	0342153
		(04-08)	FAN TO ALTERNATOR	-	4899178	2385277
TS90	GENESIS 4-CYL. 304	(98-03)	FAN TO ALTERNATOR	-	82850752	0342140
TT50A	NEW HOLLAND 4-CYL. 135	(07-08)	FAN	-	301525A1	0172206
TT75	NEW HOLLAND 4-CYL. 220	(04-06)	ALTERNATOR	-	-	0173223
TZ18DA	NEW HOLLAND 3-CYL. 58	(04-08)	FAN	-	SBA080109049	0173195
TZ22DA	NEW HOLLAND 3-CYL. 58	(04-08)	FAN	-	SBA080109049	0173195
TZ24DA	NEW HOLLAND 3-CYL. 61	(04-06)	FAN	-	SBA080109049	0173195
TZ25DA	NEW HOLLAND 3-CYL. 61	(04-08)	FAN TO ALTERNATOR	-	224354	0173195
OLIVER						
66	OLIVER 4-CYL. 129	(49-54)	FAN, GENERATOR TO S.P.	-	1M372B	0373221
99	OLIVER 4-CYL. 443	(50-56)	GENERATOR	-	7A1257	0172189
550	OLIVER 4-CYL. 155	(58-75)	POWER STEERING	-	-	0173220
		(58-75)	FAN TO GENERATOR	− POWER STEERING; →| SERIAL No. 72831	-	0173219
				− POWER STEERING; |→ SERIAL No. 72832	-	0173222
				+ POWER STEERING; →| SERIAL No. 72831	1M372B	0373221
				+ POWER STEERING; |→ SERIAL No. 72832	-	0173224
660	OLIVER 4-CYL. 155	(59-64)	FAN TO GENERATOR	-	-	0173219
		(59-64)	FAN, GENERATOR TO S.P.	-	1M372B	0373221
770	OLIVER 6-CYL. 216	(58-67)	POWER STEERING	-	106821A	1573238
				-	157538A	0173231
		(58-67)	FAN TO GENERATOR	− POWER STEERING; |→ SERIAL No. 73639	-	0173220
				+ POWER STEERING; |→ SERIAL No. 117125	-	0173222
				+ POWER STEERING; SERIAL No. 60501 → 73638	1M372B	0373221
				+ POWER STEERING; SERIAL No. 73639 → 117124	1K372B	0373225

880	OLIVER 6-CYL. 265	(58-63)	POWER STEERING	-	106821A	1573238
		(58-63)	FAN TO GENERATOR	– POWER STEERING	-	0173220
				+ POWER STEERING; |→ SERIAL No. 117125	-	0173222
				+ POWER STEERING; SERIAL No. 60501 → 117124	1K372B	0373225
1265	FIAT 3-CYL. 158	(71-75)	FAN TO ALTERNATOR	-	4818920	0373225
1355	FIAT 4-CYL. 190	(69-71)	FAN TO ALTERNATOR	-	-	0372245
1365	FIAT 4-CYL. 211	(71-75)	FAN TO ALTERNATOR	-	676865A	0173223
1450	FIAT 4-CYL. 268	(67-69)	FAN TO ALTERNATOR/GENERATOR	-	-	0101099
1550	OLIVER 6-CYL. 232	(65-69)	AIR CONDITIONING	-	167897A	0173230
		(65-69)	POWER STEERING	-	157176AA	0173194
				-	157177AA	0173210
		(65-69)	FAN TO GENERATOR	SERIAL No. 160000 → 168920	160610A	0172220
				SERIAL No. 160000 → 169844	160610A	0172220
				|→ SERIAL No. 168921	158679A	0173224
				|→ SERIAL No. 169845	162123A	0173223
	OLIVER 6-CYL. 232 LPG	(65-69)	AIR CONDITIONING	-	167897A	0173230
		(65-69)	POWER STEERING	-	157176AA	0173194
		(65-69)	FAN TO GENERATOR	SERIAL No. 160000 → 169386	160610A	0172220
				|→ SERIAL No. 169387	162123A	0173223
1555	OLIVER 6-CYL. 232	(69-75)	AIR CONDITIONING	-	167897A	0173230
		(69-75)	FAN TO ALTERNATOR	-	158679A	0173224
				-	162123A	0173223
		(69-75)	POWER STEERING	-	157176AA	0173194
				-	157177AA	0173210
1600	OLIVER 6-CYL. 231	(62-64)	POWER STEERING	-	156096A	0173232
		(62-64)	FAN TO GENERATOR	-	-	0173220
	OLIVER 6-CYL. 248	(62-64)	POWER STEERING	-	156096A	0173232
		(62-64)	FAN TO GENERATOR	-	-	0173220
	OLIVER 6-CYL. 265	(62-64)	POWER STEERING	-	156096A	0173232
		(62-64)	FAN TO GENERATOR	-	-	0173220
1650	OLIVER 6-CYL. 265	(64-69)	FAN TO ALTERNATOR	-	158679A	0173224
	OLIVER 6-CYL. 265 LPG	(64-69)	FAN TO ALTERNATOR	-	158679A	0173224
	OLIVER 6-CYL. 283	(64-69)	FAN TO ALTERNATOR	+ DUAL BELTS	162071A	0373225
				+ SINGLE BELT	157680A	0373225
		(64-69)	POWER STEERING	-	157177AA	0173210
1655	OLIVER 6-CYL. 265	(69-75)	AIR CONDITIONING	-	167897A	0173230
		(69-75)	FAN TO ALTERNATOR	-	158679A	0173224
		(69-75)	POWER STEERING	-	157176AA	0173194
	OLIVER 6-CYL. 283	(69-75)	AIR CONDITIONING	-	167897A	0173230
		(69-75)	FAN TO ALTERNATOR	-	162071A	0373225
				+ SINGLE BELT	157680A	0373225
		(69-75)	POWER STEERING	-	157177A	0173209
1750	OLIVER 6-CYL. 283	(64-69)	AIR CONDITIONING	-	167897A	0173230
		(64-69)	FAN TO ALTERNATOR	-	162071A	0373225
	OLIVER 6-CYL. 310	(64-69)	AIR CONDITIONING	-	167897A	0173230
		(64-69)	FAN TO ALTERNATOR	-	162071A	0373225

1755	OLIVER 6-CYL. 283	(70-75)	AIR CONDITIONING	-	167897A	0173230
		(70-75)	FAN TO ALTERNATOR	-	162071A	0373225
		(70-75)	POWER STEERING	-	157176A	0173194
	OLIVER 6-CYL. 310	(70-75)	AIR CONDITIONING	-	167897A	0173230
		(70-75)	FAN TO ALTERNATOR	-	162071A	0373225
		(70-75)	POWER STEERING	+ AIR CONDITIONING	103926A	0173186
				− AIR CONDITIONING	168052A	0273217
1800	OLIVER 6-CYL. 265	(60-63)	POWER STEERING	-	106834A	0173199
		(60-63)	FAN TO GENERATOR	→I SERIAL No. 124395	1M372B	0373221
				I→ SERIAL No. 124396	-	0173222
	OLIVER 6-CYL. 283	(60-63)	POWER STEERING	-	157177A	0173209
				-	1M372A	0273217
		(60-63)	FAN TO GENERATOR	→I SERIAL No. 124395	1M372B	0373221
				I→ SERIAL No. 124396	-	0173222
1850	OLIVER 6-CYL. 310	(64-69)	FAN TO ALTERNATOR	-	157680A	0373225
		(64-69)	POWER STEERING	-	-	0173194
	OLIVER 6-CYL. 384	(64-69)	FAN TO ALTERNATOR	SERIAL No. 150421 → 168342	158599A	0422134
				I→ SERIAL No. 168343	162075A	0372231
		(64-69)	POWER STEERING	-	157177AA	0173210
	PERKINS 6-CYL. 354	(64-69)	FAN TO ALTERNATOR	SERIAL No. 150421 → 168342	158599A	0422134
				I→ SERIAL No. 168343	162075A	0372231
		(64-69)	POWER STEERING	-	157177AA	0173210
1855	OLIVER 6-CYL. 310	(69-75)	AIR CONDITIONING	-	167897A	0173230
		(69-75)	FAN TO ALTERNATOR	-	162071A	0373225
		(69-75)	POWER STEERING	-	157176AA	0173194
				+ AIR CONDITIONING	103926A	0173186
				− AIR CONDITIONING	168052A	0273217
1900	GM 4-CYL. 212	(60-63)	FAN	I→ SERIAL No. 124396	155985A	1272212
				SERIAL No. 90525 → 124395	106093A	0272210
		(60-63)	GENERATOR	-	1M372A	0273217
		(60-63)	POWER STEERING	SERIAL No. 90525 → 134683	106841A	0173192
1950	GM 4-CYL. 212	(64-70)	ALTERNATOR	-	157751A	0273217
		(64-70)	FAN	-	155985A	1272212
		(64-70)	POWER STEERING	-	157187AA	0173199
				-	167910A	1473203
1955	OLIVER 6-CYL. 310	(69-74)	AIR CONDITIONING	-	167897A	0173230
		(69-74)	FAN TO ALTERNATOR	-	157680A	0373225
		(69-74)	POWER STEERING	+ AIR CONDITIONING	103926A	0173186
				− AIR CONDITIONING	168052A	0273217
2050	WHITE-HERCULES 6-CYL. 478	(68-69)	AIR CONDITIONING	-	167890A	1472236
		(68-69)	FAN	-	166301A	0372245
2150	WHITE-HERCULES 6-CYL. 478	(68-69)	AIR CONDITIONING	-	167890A	1472236
		(68-69)	FAN	-	167836A	0372244
2155	MINNEAPOLIS-MOLINE 6-CYL. 585	(71)	FAN TO ALTERNATOR	-	10A30623	0372245
		(71)	POWER STEERING	-	10A30590	0372232

2255	CATERPILLAR 3150	(72-76)	AIR CONDITIONING	-	303076253	0372257
		(72-76)	FAN TO ALTERNATOR	-	303075087	0422134
		(72-76)	POWER STEERING	-	-	0173195
	CATERPILLAR 3208	(72-76)	AIR CONDITIONING	-	303076253	0372257
		(72-76)	FAN TO ALTERNATOR	-	303075087	0422134
		(72-76)	POWER STEERING	-	-	0173195
2655	MINNEAPOLIS-MOLINE 6-CYL. 504 LPG	(70-72)	FAN TO ALTERNATOR	-	200007935	0372245
		(70-72)	POWER STEERING	→I SERIAL No. 45600262	207000472	0173220
	MINNEAPOLIS-MOLINE 6-CYL. 585	(70-72)	FAN TO ALTERNATOR	-	200007935	0372245
		(70-72)	POWER STEERING	→I SERIAL No. 45600262	207000472	0173220
1950T	OLIVER 6-CYL. 310	(69)	AIR CONDITIONING	-	167890A	1472236
				-	167897A	0173230
				→I SERIAL No. 204000	167897A	0173230
				I→ SERIAL No. 204001	167890A	1472236
		(67-69)	FAN TO ALTERNATOR	-	-	0373225
BD	HERCULES 6-CYL. 298	(46-56)	STARTER	-	55476	0102108
BG	HERCULES 4-CYL. 320	(39-44)	STARTER	-	55476	0102108
BGS	HERCULES 4-CYL. 320	(46-55)	STARTER	-	55476	0102108
OC12	HERCULES DJXC	(54-61)	FAN TO GENERATOR	-	24270	1102110
OC9	HERCULES DD198	(59-65)	FAN TO GENERATOR	-	606670F	1472236
SUPER 55	OLIVER 4-CYL. 144	(54-58)	FAN TO GENERATOR	− WATER PUMP	1M372A	0273217
				+ WATER PUMP	1M372B	0373221
SUPER 66	OLIVER 4-CYL. 144	(54-58)	FAN TO GENERATOR	− WATER PUMP	1M372A	0273217
				+ WATER PUMP	1M372B	0373221
SUPER 77	OLIVER 6-CYL. 216	(54-58)	FAN TO GENERATOR	− POWER STEERING	1M372A	0273217
				+ POWER STEERING	1M372B	0373221
	OLIVER 6-CYL. 216 LPG	(54-58)	FAN TO GENERATOR	− POWER STEERING	1M372A	0273217
				+ POWER STEERING	1M372B	0373221
SUPER 88	OLIVER 6-CYL. 265	(54-58)	FAN TO GENERATOR	− POWER STEERING	1K372A	0173219
				+ POWER STEERING	1K372B	0373225
	OLIVER 6-CYL. 265 LPG	(54-58)	FAN TO GENERATOR	− POWER STEERING	1K372A	0173219
				+ POWER STEERING	1K372B	0373225
SUPER 99	OLIVER 6-CYL. 302	(54-58)	FAN TO GENERATOR	-	7A372B	0172219
SAME						
CORSARO 70	SAME 4-CYL. 221	(80-86)	BLOWER TO ALTERNATOR	-	-	1573238
DELFINO 35	SAME 2-CYL. 110	(81-85)	BLOWER TO ALTERNATOR	-	-	0173240
EXPLORER 75	SAME 4-CYL. 244	(85-87)	BLOWER TO ALTERNATOR	-	-	1473236
EXPLORER 90	SAME 4-CYL. 244	(87-01)	BLOWER TO ALTERNATOR	-	-	1573238
FRUTTETO II 60	SAME 3-CYL. 183	(92-01)	ALTERNATOR	-	-	0173192
FRUTTETO II 75	SAME 4-CYL. 244	(92-01)	ALTERNATOR	-	-	0173192
FRUTTETO II 85	SAME 4-CYL. 244	(90-01)	ALTERNATOR	-	-	0173192
MERCURY 75	SAME 4-CYL. 254	(82-86)	BLOWER TO ALTERNATOR	-	-	0173240
MERCURY 85	SAME 4-CYL. 254	(82-91)	BLOWER TO ALTERNATOR	-	-	0173240
MINITAURUS 60	SAME 3-CYL. 190	(80-88)	BLOWER TO ALTERNATOR	-	-	1573238
ROW CROP 85	SAME 4-CYL. 254	(84-96)	BLOWER TO ALTERNATOR	-	-	0173240
VIGNERON 60	SAME 3-CYL. 190	(84-86)	BLOWER TO ALTERNATOR	-	-	1573238
SHEPPARD						
SD2	SHEPPARD 2-CYL. 142	(49-57)	FAN TO GENERATOR	-	400251	1401110
SD3	SHEPPARD 3-CYL. 188	(48-57)	FAN TO GENERATOR	-	400251	1401110
SD4	SHEPPARD 4-CYL. 318	(55-57)	FAN TO GENERATOR	-	400050	0173247
SDG2	SHEPPARD 2-CYL. 142	(50-56)	FAN TO GENERATOR	-	400251	1401110

SDG3	SHEPPARD 3-CYL. 213	(50-56)	FAN TO GENERATOR	-	400251	1401110
SDO2	SHEPPARD 2-CYL. 142	(50-56)	FAN TO GENERATOR	-	400251	1401110
SDO3	SHEPPARD 3-CYL. 188	(50-56)	FAN TO GENERATOR	-	400251	1401110
STEIGER						
BEARCAT 1000	CUMMINS L10	(86-87)	AIR CONDITIONING	-	16864	0272210
		(86-87)	FAN	-	3034942	0285249
BEARCAT I	CATERPILLAR 3208	(70-74)	AIR CONDITIONING	-	61451	0372232
		(70-74)	FAN	-	6019	0372240
		(70-74)	WATER PUMP TO ALTERNATOR	+ 55A. ALTERNATOR	6019	0372240
				+ 72A. ALTERNATOR	61464	0172235
BEARCAT II	CATERPILLAR 3208	(74-75)	AIR CONDITIONING	-	61451	0372232
		(74-75)	FAN	-	6019	0372240
		(74-75)	WATER PUMP TO ALTERNATOR	+ 55A. ALTERNATOR	6019	0372240
				+ 72A. ALTERNATOR	61464	0172235
BEARCAT II ST225	CATERPILLAR 3306	(74-76)	FAN TO AIR CONDITIONING	-	-	0372223
		(74-76)	FAN TO ALTERNATOR	-	-	0372255
BEARCAT III PT225	CATERPILLAR 3306	(77-83)	FAN	-	901502T1	1699317
		(77-83)	FAN TO AIR CONDITIONING	-	61428	0372223
		(77-83)	FAN TO ALTERNATOR	-	6135	0372255
COUGAR 1000	CUMMINS L10	(86-89)	AIR CONDITIONING	-	16864	0272210
		(86-89)	FAN	-	3034942	0285249
		(86-89)	WATER PUMP TO ALTERNATOR	-	-	0188231
COUGAR CR1225	CATERPILLAR 6-CYL. 638	(85)	AIR CONDITIONING	-	-	0372223
		(85)	FAN TO ALTERNATOR	-	-	0372244
COUGAR II	CATERPILLAR 3306	(74-76)	FAN TO AIR CONDITIONING	-	-	0372223
		(74-76)	FAN TO ALTERNATOR	-	061463A	0372258
COUGAR II ST300	CATERPILLAR 6-CYL. 638	(74-76)	FAN	-	-	0372244
		(74-76)	HYDRAULIC PUMP	-	-	0172206
		(74-76)	FAN, ALTERNATOR TO AIR CONDITIONING	-	-	1472251
COUGAR III PT270	CATERPILLAR 3306	(77-81)	AIR CONDITIONING	-	-	0372223
		(77-81)	FAN TO ALTERNATOR	-	6135	0372255
COUGAR III PTA251	CUMMINS 6-CYL. 855	(80-81)	ALTERNATOR	-	178440	0372223
		(80-81)	WATER PUMP	-	-	2484242
COUGAR III PTA270	CATERPILLAR 3306	(80-81)	AIR CONDITIONING	-	19344	0422134
		(80-81)	FAN TO ALTERNATOR	-	6096	0372255
COUGAR III PTA280	CUMMINS NTC290	(81-83)	AIR CONDITIONING	-	-	2501076
		(81-83)	ALTERNATOR	-	-	1472227
COUGAR III ST251	CUMMINS NTC290	(76-82)	AIR CONDITIONING	-	-	2501076
		(76-82)	ALTERNATOR	-	-	1472227
COUGAR III ST270	CATERPILLAR 3306	(76-81)	AIR CONDITIONING	-	61428	0372223
		(76-81)	FAN TO ALTERNATOR	-	6135	0372255
COUGAR IV CM280	CATERPILLAR 3406	(83-85)	ALTERNATOR	-	-	0301141
		(83-85)	FAN	-	-	1401125
COUGAR IV KS280	CUMMINS 6-CYL. 855	(83-85)	AIR CONDITIONING	-	-	0172211
		(83-85)	ALTERNATOR	-	178440	0372223
		(83-85)	WATER PUMP	-	217638	2484242
LION 1000	CUMMINS 6-CYL. 855	(86-89)	ALTERNATOR	-	-	0122155
		(86-89)	FAN	-	-	1285238
		(86-89)	WATER PUMP	-	-	2484242
PANTHER CP1400	CATERPILLAR 6-CYL. 893	(82-87)	AIR CONDITIONING	-	-	0172220

PANTHER II ST310	CUMMINS 6-CYL. 855	(74-76)	AIR CONDITIONING	-	61473	2501076
		(74-76)	ALTERNATOR	-	-	0372223
PANTHER III PT350	CUMMINS V-8 903	(77-81)	ALTERNATOR	-	178472	0272210
		(77-81)	FAN TO WATER PUMP	-	-	0372271
PANTHER III ST310	CUMMINS 6-CYL. 855	(76-83)	AIR CONDITIONING	-	-	0272210
PANTHER III ST320	CUMMINS V-8 903	(76-77)	ALTERNATOR	-	178472	0272210
		(76-77)	FAN TO WATER PUMP	-	-	0372271
PANTHER IV SM325	KOMATSU 6-CYL. 674	(83-85)	AIR CONDITIONING	-	-	0372240
PANTHER KP1360	CUMMINS 6-CYL. 855	(82-85)	AIR CONDITIONING	-	178472	0272210
		(82-85)	ALTERNATOR	-	178440	0372223
		(82-85)	WATER PUMP	-	217638	2484242
PANTHER KP1400	CUMMINS 6-CYL. 855	(82-85)	AIR CONDITIONING	-	178472	0272210
		(82-85)	ALTERNATOR	-	-	0372223
		(82-85)	WATER PUMP	-	217638	2484242
PUMA 1000	STEIGER 6-CYL. 505	(86-88)	AIR CONDITIONING	-	061451A	0172235
		(86-88)	FAN TO ALTERNATOR	-	3905866	0185275
TIGER III ST450	CATERPILLAR 3408	(78-83)	AIR CONDITIONING	-	-	0501121
		(78-83)	ALTERNATOR	-	206996	2988238
WILDCAT I	CATERPILLAR 3145	(69-73)	AIR CONDITIONING	-	-	1472251
		(69-73)	ALTERNATOR	-	6019	0372240
		(69-73)	FAN	-	-	0172225
WILDCAT I SUPER	CATERPILLAR 3150	(69-74)	AIR CONDITIONING	-	61428	0372223
		(69-74)	ALTERNATOR	+ 55A. ALTERNATOR	6019	0372240
				+ 72A. ALTERNATOR	61464	0172235
		(69-74)	FAN	-	6019	0372240
WILDCAT III RC210	CATERPILLAR 3208	(76-77)	AIR CONDITIONING	-	61451	0372232
		(76-77)	ALTERNATOR	-	61464	0172235
		(76-77)	FAN TO IDLER	-	61416	0399322
WILDCAT III ST210	CATERPILLAR 3208	(76-80)	AIR CONDITIONING	-	61451	0372232
		(76-80)	ALTERNATOR	-	61464	0172235
		(76-80)	FAN TO IDLER	-	61416	0399322
VALTRA-VALMET						
880	MWM 4-CYL. 239	(95)	FAN TO ALTERNATOR	-	-	0172228
980	MWM 4-CYL. 239	(88-90)	FAN TO ALTERNATOR	-	-	0172228
78 VIKING	MWM 4-CYL. 239	(95)	FAN TO ALTERNATOR	-	-	0172228
VERSATILE						
145	CUMMINS V-8 470	(67-71)	HYDRAULIC PUMP - LEFT SIDE	-	-	1401101
		(67-71)	WATER PUMP TO ALTERNATOR	+ 55A. ALTERNATOR	-	0372231
150	PERKINS 4-CYL. 236	(77-81)	FAN TO ALTERNATOR	-	34922	1472238
		(77-81)	HYDRAULIC PUMP	-	47613	0101087
256	CUMMINS 4-CYL. 239	(84-88)	AIR CONDITIONING	-	86452	0272215
		(84-88)	FAN TO ALTERNATOR	-	3903091	0785267
276	CUMMINS 4-CYL. 239	(85-91)	FAN TO ALTERNATOR	-	3903091	0785267
500	CUMMINS V-8 504	(77-79)	WATER PUMP	-	196937	1601103
555	CUMMINS V-8 555	(79-87)	ALTERNATOR	-	-	0173232
		(79-87)	FAN TO WATER PUMP	-	178598	0201096
700	CUMMINS V-8 555	(71-77)	AIR CONDITIONING	-	20974	0172217
		(71-77)	ALTERNATOR	-	178434	0373178
		(71-77)	FAN TO WATER PUMP	-	201927	1472238
750	CUMMINS 6-CYL. 855	(76-77)	ALTERNATOR	-	200549	0172225
800	CUMMINS 6-CYL. 855	(73-77)	ALTERNATOR	-	200549	0172225

835	CUMMINS 6-CYL. 855	(78-87)	ALTERNATOR	-	-	0372223
		(78-87)	WATER PUMP	-	-	2484242
846	CUMMINS 6-CYL. 611	(87-92)	AIR CONDITIONING	-	92756	0172208
		(87-92)	ALTERNATOR	-	3037425	2388232
		(87-92)	FAN	-	3034944	0285264
850	CUMMINS 6-CYL. 855	(73-77)	ALTERNATOR	-	200549	0172225
875	CUMMINS 6-CYL. 855	(78-87)	ALTERNATOR	-	-	0172225
876	CUMMINS 6-CYL. 611	(85-93)	AIR CONDITIONING	-	92756	0172208
		(85-93)	ALTERNATOR	-	3037425	2388232
		(85-93)	FAN	-	3034944	0285264
895	CUMMINS 6-CYL. 855	(80-87)	ALTERNATOR	-	178440	0372223
		(80-87)	WATER PUMP	-	217638	2484242
900	CUMMINS V-8 903	(72-75)	AIR CONDITIONING	+ DUAL BELTS	20974	0172217
				+ SINGLE BELT	178598	0201096
		(72-75)	ALTERNATOR	-	-	0172217
		(72-75)	FAN TO WATER PUMP	-	202046	0372245
935	CUMMINS V-8 903	(78-82)	AIR CONDITIONING	-	178598	0201096
		(78-82)	FAN TO WATER PUMP	-	202047	0272247
936	CUMMINS 6-CYL. 855	(85-91)	AIR CONDITIONING	-	178428	0172217
		(85-91)	ALTERNATOR	-	178440	0372223
		(85-91)	WATER PUMP	-	217638	2484242
950	CUMMINS V-8 903	(77-82)	AIR CONDITIONING	-	-	0201097
		(77-82)	ALTERNATOR	-	178608	0102101
		(77-82)	FAN TO WATER PUMP	-	-	0272247
976	CUMMINS 6-CYL. 855	(85-93)	AIR CONDITIONING	-	-	0272218
		(85-93)	ALTERNATOR	-	-	0372223
		(85-93)	WATER PUMP	-	217638	2484242
1150	CUMMINS 6-CYL. 1150	(81-85)	AIR CONDITIONING	-	63727	0172225
		(81-85)	WATER PUMP TO ALTERNATOR	-	205913	1888236
1156	CUMMINS 6-CYL. 1150	(86-92)	AIR CONDITIONING	-	63727	0172225
		(86-92)	WATER PUMP TO ALTERNATOR	-	205913	1888236
276 II	FORD 4-CYL. 268	(85-91)	AIR CONDITIONING	-	-	0172217
		(85-91)	FAN TO ALTERNATOR	-	-	0372244
900-2	CUMMINS V-8 903	(76-78)	AIR CONDITIONING	+ DUAL BELTS	20974	0172217
				+ SINGLE BELT	178598	0201096
		(76-78)	ALTERNATOR	-	-	0172217
		(76-78)	FAN TO WATER PUMP	-	202046	0372245
WHITE						
100	CUMMINS 6-CYL. 359	(87-89)	FAN TO AIR CONDITIONING	-	-	1272212
		(87-89)	FAN TO ALTERNATOR	-	3903099	0785278
120	CUMMINS 6-CYL. 359	(87-89)	AIR CONDITIONING	-	-	1272212
		(87-89)	FAN TO ALTERNATOR	-	3903098	2485285
140	CUMMINS 6-CYL. 359	(87-89)	FAN TO AIR CONDITIONING	-	-	1272212
		(87-89)	FAN TO ALTERNATOR	-	3903099	0785278
160	CUMMINS 6-CYL. 505	(87-89)	AIR CONDITIONING	-	303315134	1272212
		(87-89)	FAN TO ALTERNATOR	-	3911567	0785288
				-	3911578	0785285
				-	3911579	0385289
				-	3911580	0285291

185	CUMMINS 6-CYL. 505	(87-89)	AIR CONDITIONING	-	303315134	1272212
		(87-89)	FAN TO ALTERNATOR	-	3911567	0785288
				-	3911578	0785285
				-	3911579	0385289
1355	FIAT 4-CYL. 190	(69-71)	FAN TO ALTERNATOR	-	-	0372245
1555	OLIVER 6-CYL. 232	(69-75)	AIR CONDITIONING	-	167897A	0173230
		(69-75)	FAN TO ALTERNATOR	-	158679A	0173224
				-	162123A	0173223
		(69-75)	POWER STEERING	-	157176AA	0173194
				-	157177AA	0173210
1655	OLIVER 6-CYL. 265	(69-75)	AIR CONDITIONING	-	167897A	0173230
		(69-75)	FAN TO ALTERNATOR	-	158679A	0173224
		(69-75)	POWER STEERING	-	157176AA	0173194
	OLIVER 6-CYL. 283	(69-75)	AIR CONDITIONING	-	167897A	0173230
		(69-75)	FAN TO ALTERNATOR	-	162071A	0373225
				+ SINGLE BELT	157680A	0373225
		(69-75)	POWER STEERING	-	157177A	0173209
1755	OLIVER 6-CYL. 283	(70-75)	AIR CONDITIONING	-	167897A	0173230
		(70-75)	FAN TO ALTERNATOR	-	162071A	0373225
		(70-75)	POWER STEERING	-	157176A	0173194
	OLIVER 6-CYL. 310	(70-75)	AIR CONDITIONING	-	167897A	0173230
		(70-75)	FAN TO ALTERNATOR	-	162071A	0373225
		(70-75)	POWER STEERING	+ AIR CONDITIONING	103926A	0173186
				− AIR CONDITIONING	168052A	0273217
1855	OLIVER 6-CYL. 310	(69-75)	AIR CONDITIONING	-	167897A	0173230
		(69-75)	FAN TO ALTERNATOR	-	162071A	0373225
		(69-75)	POWER STEERING	-	157176AA	0173194
				+ AIR CONDITIONING	103926A	0173186
				− AIR CONDITIONING	168052A	0273217
1955	WAUKESHA 6-CYL. 310	(69-74)	AIR CONDITIONING	-	167897A	0173230
		(69-74)	FAN TO ALTERNATOR	-	157680A	0373225
		(69-74)	POWER STEERING	+ AIR CONDITIONING	103926A	0173186
				− AIR CONDITIONING	168052A	0273217
6125	CUMMINS 6-CYL. 359	(93-97)	FAN TO AIR CONDITIONING	-	-	0172225
		(93-97)	SERPENTINE	-	3911559	0785278
6175	CUMMINS 6-CYL. 505	(93-99)	FAN TO AIR CONDITIONING	-	-	0172225
		(93-99)	SERPENTINE	-	3911559	0785278
6195	CUMMINS 6-CYL. 505	(93-99)	FAN TO AIR CONDITIONING	-	-	0172225
		(93-99)	SERPENTINE	-	3911559	0785278
125 WORKHORSE	CUMMINS 6-CYL. 359	(90-92)	FAN TO AIR CONDITIONING	-	303315134	1272212
		(90-92)	FAN, ALTERNATOR TO IDLER	-	-	0785276
145 WORKHORSE	CUMMINS 6-CYL. 359	(90-92)	FAN TO AIR CONDITIONING	-	303315134	1272212
		(90-92)	FAN TO ALTERNATOR	-	3911559	0785278
170 WORKHORSE	CUMMINS 6-CYL. 505	(90-92)	AIR CONDITIONING	-	303315134	1272212
		(90-92)	FAN TO ALTERNATOR	-	3911567	0785288
				-	3911578	0785285
				-	3911579	0385289
195 WORKHORSE	CUMMINS 6-CYL. 505	(90-92)	AIR CONDITIONING	-	303315134	1272212
		(90-92)	FAN TO ALTERNATOR	-	3911567	0785288
				-	3911578	0785285
				-	3911579	0385289

2-105	PERKINS 6-CYL. 354	(74-82)	AIR CONDITIONING	-	303143589	0172208
		(74-82)	FAN TO ALTERNATOR	-	-	0173240
2-110	PERKINS 6-CYL. 354	(82-87)	AIR CONDITIONING	-	-	0272210
		(82-87)	FAN TO ALTERNATOR	-	303354288	0272247
2-115 INDUSTRIAL	GM 4-CYL. 212	(68-75)	FAN TO ALTERNATOR	-	-	0173218
		(68-75)	POWER STEERING	+ DUAL BELTS	-	1473203
				+ SINGLE BELT	-	0173198
2-135	WHITE 6-CYL. 478	(76-82)	AIR CONDITIONING	SERIAL No. 272663 → 272916	303155102	1472238
				|→ SERIAL No. 272917	-	0372244
		(76-82)	FAN TO ALTERNATOR	-	156422A	0272247
				-	166422A	0372245
2-150	WHITE 6-CYL. 585	(75-76)	AIR CONDITIONING	-	303155102	1472238
		(75-76)	FAN TO ALTERNATOR	-	200009089	0272247
2-155	WHITE 6-CYL. 478	(76-82)	AIR CONDITIONING	SERIAL No. 272663 → 272916	303155102	1472238
				|→ SERIAL No. 272917	-	0372244
		(76-82)	FAN TO ALTERNATOR	-	156422A	0272247
				-	166422A	0372245
2-180	CATERPILLAR 3208	(77-82)	FAN	-	-	1472238
		(77-82)	WATER PUMP	-	-	0422134
		(77-82)	ALTERNATOR TO AIR CONDITIONING	-	-	0372272
2-30	ISUZU 3-CYL. 91	(79-84)	FAN TO ALTERNATOR	-	5136710400	1272212
2-35	ISUZU 3-CYL. 108	(79-84)	FAN TO ALTERNATOR	-	-	0172214
2-44 INDUSTRIAL	WHITE 4-CYL. 155	(68-75)	HYDRAULIC PUMP	-	-	0173220
		(68-75)	FAN TO GENERATOR	-	-	0173224
2-50	FIAT 3-CYL. 158	(76-80)	FAN TO ALTERNATOR	-	4624737	0173223
2-60	FIAT 4-CYL. 211	(76-80)	FAN TO ALTERNATOR	-	676865A	0173223
2-62	ISUZU 4-CYL. 219	(79-81)	FAN TO ALTERNATOR	-	-	0201092
2-70	WHITE 6-CYL. 265	(76-82)	FAN TO ALTERNATOR	-	158679A	0173224
	WHITE 6-CYL. 283	(76-82)	FAN TO ALTERNATOR	-	157680A	0373225
2-78 INDUSTRIAL	WHITE 6-CYL. 265	(68-75)	AIR CONDITIONING	-	167897A	0173230
		(68-75)	FAN TO ALTERNATOR	-	158679A	0173224
		(68-75)	POWER STEERING	-	157176AA	0173194
	WHITE 6-CYL. 283	(68-75)	AIR CONDITIONING	-	167897A	0173230
		(68-75)	FAN TO ALTERNATOR	-	162071A	0373225
		(68-75)	POWER STEERING	-	157177AA	0173210
2-85	PERKINS 6-CYL. 354	(75-82)	AIR CONDITIONING	-	-	0172208
		(75-82)	FAN TO ALTERNATOR	-	-	0173240
2-88	PERKINS 6-CYL. 354	(82-87)	AIR CONDITIONING	-	-	0272210
		(82-87)	FAN TO ALTERNATOR	-	-	0272247
4-115 INDUSTRIAL	GM 4-CYL. 212	(68-75)	FAN TO ALTERNATOR	-	-	0173218
		(68-75)	POWER STEERING	+ DUAL BELTS	-	1473203
				+ SINGLE BELT	-	0173198
4-150	CATERPILLAR 3208	(74-78)	AIR CONDITIONING	-	303077284	1272212
		(74-78)	FAN TO ALTERNATOR	-	303075079	0422134
4-180	CATERPILLAR 3208	(75-78)	AIR CONDITIONING	-	303077284	1272212
		(75-78)	FAN TO ALTERNATOR	-	303075079	0422134
4-210	CATERPILLAR 3208	(78-82)	AIR CONDITIONING	-	-	0372197
		(78-82)	FAN TO ALTERNATOR	-	303075079	0422134
4-225	CATERPILLAR 3208	(83-87)	FAN	-	303302857	0372240
		(83-87)	WATER PUMP	-	1P4334	0422134

4-270	CATERPILLAR 3306	(83-88)	AIR CONDITIONING	-	-	0372223
		(83-88)	FAN TO ALTERNATOR	-	-	0372275
4-78 INDUSTRIAL	WHITE 6-CYL. 265	(68-75)	AIR CONDITIONING	-	167897A	0173230
		(68-75)	FAN TO ALTERNATOR	-	158679A	0173224
		(68-75)	POWER STEERING	-	157176AA	0173194
	WHITE 6-CYL. 283	(68-75)	AIR CONDITIONING	-	167897A	0173230
		(68-75)	FAN TO ALTERNATOR	-	162071A	0373225
		(68-75)	POWER STEERING	-	157177AA	0173210
60 AMERICAN	CUMMINS 4-CYL. 239	(89-91)	AIR CONDITIONING	-	303315134	1272212
		(89-91)	FAN TO ALTERNATOR	-	3911559	0785278
80 AMERICAN	CUMMINS 4-CYL. 239	(89-91)	AIR CONDITIONING	-	303315134	1272212
		(89-91)	FAN TO ALTERNATOR	-	3911559	0785278
				-	3911563	0185275
FB21	ISEKI 3-CYL. 71	(86-88)	FAN TO ALTERNATOR	-	-	0173209
FB31	ISEKI 3-CYL. 91	(86-88)	FAN TO ALTERNATOR	-	5136710400	1272212
FB37	ISEKI 4-CYL. 111	(86-88)	FAN TO ALTERNATOR	-	-	0272215
YANMAR						
YM135	YANMAR 2-CYL. 38	(76-79)	FAN	-	-	0173194
YM140	YANMAR 2-CYL. 39	(84-92)	FAN TO ALTERNATOR	-	121522	0372204
YM146	YANMAR 2-CYL. 39	(83-93)	FAN TO ALTERNATOR	-	-	0172201
YM147	YANMAR 2-CYL. 39	(84-92)	FAN TO ALTERNATOR	-	121522	0372204
YM155	YANMAR 2-CYL. 40	(76-79)	FAN	-	-	0173194
YM165	YANMAR 2-CYL. 40	(80-86)	FAN	-	12406442290	0172192
YM169	YANMAR 3-CYL. 54	(86-89)	FAN TO ALTERNATOR	-	124064	0172192
YM180	YANMAR 3-CYL. 54	(83-92)	FAN TO ALTERNATOR	-	121023	0372199
YM186	YANMAR 3-CYL. 54	(80-86)	FAN TO ALTERNATOR	-	12102342290	0372199
YM187	YANMAR 3-CYL. 54	(86-89)	FAN TO ALTERNATOR	-	121023	0372199
YM195	YANMAR 2-CYL. 61	(77-80)	FAN TO ALTERNATOR	-	-	0172208
		(77-80)	WATER PUMP	-	124240	0272210
YM220	YANMAR 3-CYL. 69	(82-93)	FAN TO ALTERNATOR	-	12102342290	0372199
YM226	YANMAR 3-CYL. 69	(81-93)	FAN TO ALTERNATOR	-	12102342290	0372199
YM240	YANMAR 2-CYL. 70	(77-81)	FAN TO ALTERNATOR	-	-	0172208
		(77-81)	WATER PUMP	-	124240	0272210
YM330	YANMAR 3-CYL. 91	(78-91)	FAN TO ALTERNATOR	-	124756	0172208
		(78-91)	WATER PUMP	-	124240	0272210
YM336	YANMAR 3-CYL. 91	(80-93)	FAN TO ALTERNATOR	-	-	0172214
ZETOR						
3320	ZETOR 5201	(93-01)	FAN TO ALTERNATOR	-	-	1400087
3340	ZETOR 5201	(93-01)	FAN TO ALTERNATOR	-	-	1400087
5211	ZETOR 5201	(85-92)	FAN TO ALTERNATOR	-	-	0201092
5245	ZETOR 5201	(85-92)	FAN TO ALTERNATOR	-	-	0201092
6211	ZETOR 6201	(86-92)	FAN TO ALTERNATOR	-	-	0201092
6245	ZETOR 6201	(85-92)	FAN TO ALTERNATOR	-	-	0201092
7211	ZETOR 4-CYL. 219	(85-89)	FAN TO ALTERNATOR	-	-	0201092
7245	ZETOR 4-CYL. 219	(85-89)	FAN TO ALTERNATOR	-	-	0201092
7320	ZETOR 4-CYL. 239	(93-04)	FAN TO ALTERNATOR	-	-	1400087
7340	ZETOR 4-CYL. 239	(93-04)	FAN TO ALTERNATOR	-	-	1400087
7711	ZETOR 4-CYL. 239	(86-92)	FAN TO ALTERNATOR	-	-	0201092
7745	ZETOR 4-CYL. 239	(88-96)	FAN TO ALTERNATOR	-	-	0201092
8111	ZETOR 4-CYL. 278	(85-91)	FAN TO ALTERNATOR	-	-	0173230
8145	ZETOR 4-CYL. 278	(85-91)	FAN TO ALTERNATOR	-	-	0173230

10111	ZETOR 4-CYL. 278	(85-91)	AIR CONDITIONING	-	-	0172225
		(85-91)	FAN TO ALTERNATOR	-	-	0173231
10145	ZETOR 4-CYL. 278	(85-91)	AIR CONDITIONING	-	-	0172225
		(85-91)	FAN TO ALTERNATOR	-	-	0173231
12111	ZETOR 6-CYL. 418	(85-94)	AIR CONDITIONING	-	-	0172225
		(85-94)	FAN TO ALTERNATOR	-	-	0173231
12145	ZETOR 6-CYL. 418	(83-92)	AIR CONDITIONING	-	-	0172225
		(83-92)	FAN TO ALTERNATOR	-	-	0173231
16145	ZETOR 6-CYL. 418	(85-90)	AIR CONDITIONING	-	-	0172225
		(85-90)	FAN TO ALTERNATOR	-	-	0173231

MANUFACTURERS' PART NUMBER LISTING

DRIVEN BY POSSIBILITY™

MANUFACTURERS' PART NUMBER LISTING

AGRIMASTER....888
AHWI....888
AMITY TECHNOLOGY....888
ARBOS....888
BELARUS....888
BIG BUD....888
BISO....888
BIZON....890
BRAUD....890
BUHLER....891
CASE INTL. HARVESTER....891
CATERPILLAR....899
CHALLENGER....900
CLAAS....900
COCKSHUTT....907
DEUTZ-FAHR....907
DRONNINGBORG....918
EPPLE MOBIL....922
FELLA....923
FENDT....923
FORTSCHRITT....924
GASPARDO....925
GATES....925
GERINGHOFF....925
GOMSELMASH....925
GRIMME....925
HESSTON....926
HOLMER....926
JENZ....926
JFABRIKEN....927
JOHN DEERE....927
KEMPER....936
KLEINE....936
KPAB....936
KRONE....936
KUHN....937
KVERNELAND....937
LANDINI....938
LAVERDA....938
LELY....940
LEYLAND....940
LONG....940
MACDON....940
MANITOU....940
MASSEY FERGUSON....940
MENGELE....954
MITSUBISHI-SATOH....954
NEW HOLLAND....954
OLIVER....969
PEZET....969
POTTINGER....969
RAYCO....969
REEKIE....969
REKORD/AGRAM....969
ROPA....970
ROSTELMACH....970
ROUSSEAU....971
SAMPO ROSENLEW....971
SEMANATOAREA....973
SHEPPARD....973
SISU DIESEL....973
SPITOR....973
STOLL....973
VALTRA....973
VERSATILE....974
VICON....974
VOLVO....974
YANMAR....974
ZETOR....974
ZMAJ....974

AGRIMASTER / AHWI / AMITY TECHNOLOGY / ARBOS / BELARUS / BIG BUD / BISO

OE	Gates
AGRIMASTER	
0001000	2787276
0001001	2787283
0001002	2987290
0001003	2787257
0001006	2787262
0001016	0287268
0001026	1443160
0001027	2787272
0001032	2787286
AHWI	
50.2.1812.B.Y	3023178
50.2.1860.B.Z.2	3023182
50.2.1912.B.X	0223185
50.2.1962.B.X	0123190
50.2.2135.B.X.2	3023203
50.2.2135.B.X.3	3023202
50.2.2135.B.Z.2	3023203
50.2.2135.B.Z.4	3023203
50.2.2435.B.Z.4	3023226
50.2.2462.B.Y.2	3023227
50.2.2462.B.Y.3	3023228
50.2.2600.B.Z.3	3023237
50.2.3000.C.Y	3027274
50.3.1962.B.X	2624191
50.3.2618.A	3024240
50.3.2762.B.Z	1424251
50.4.10800.B.Z	3025849
50.4.2762.B.Z	0225253 EE-TECH
50.4.3016.B.Y	1425272
50.4.3130.B.Z.2	3025280
50.4.3440.B.Y	1425303
50.4.4275.B.Y	0325365 EE-TECH
50.4.7840.B.Y	3025630
50.5.5270.C.Z.2	2841469
5021812BY	3023178
5021860BZ2	3023182
5021912BX	0223185
5021962BX	0123190
5022135BX2	3023203
5022135BX3	3023202
5022135BZ2	3023203
5022135BZ4	3023203
5022276BY	2023212
5022435BZ3	3023224
5022435BZ4	3023226
5022462BY2	3023227
5022462BY3	3023228
5022600BZ3	3023237
5023000CY	3027274
5031962BX	2624191
5032618A	3024240
5032762BZ	1424251
50410800BZ	3025849
5042762BZ	0225253 EE-TECH
5043016BY	1425272
5043130BZ2	3025280
5043440BY	1425303
5044275BY	0325365 EE-TECH
5047840BY	3025630
5055270CZ2	2841469
XX.6.1740.B.Z	3049222
XX61740BZ	3049222

OE	Gates
AMITY TECHNOLOGY	
56648	2649464
64474	2684530
72056	2649300
72630	2649422
ARBOS	
610041225	1113175
A15535	0312265
A30094	0110126
A30095	0239320
A30096	2539303
A30097	2001162
A30098	0102189
A30099	0202209
A30100	0302197
A30101	0202235
A30102	0302251
A30103	0302313
A30104	2002237
A30105	0302136
A30107	0702295
A33379	1118108
A33380	1118081
A33381	0402170
A33382	0202275
A33383	1902376
A33384	0302200
A33386	2101142
A33409	0702272
A37240	0202310
A37830	1103248
A41043	2501256
A41166	1103242
A41221	1113237
A41222	1125260
A41223	1637240
A41225	1113175
A41226	1118090
A41228	1118090
A4153	0312168
A42869	2002190
A46184	0202187
A48817	1601103
A48818	1101149
A48826	1524207
A48827	1902206
A48828	0302227
A48829	0112225
A51148	0223201
A51151	1401145
A51163	0302248
A51191	2001143
A51197	0301155
A51210	0302251
A51246	0101184
A51689	1100172
A52700	1123301
A52701	1112235
A52702	1924209
A52732	0101151
A52733	1401113
A52771	0302281
A52772	1423267
A52774	1402217

OE	Gates
A54293	1100049
A54294	1100162
A55405	0102107
A57674	1123251
A57874	0112253
A58630	1100051
A61083	1405255
A62776	1424212
A62777	0324211
A62950	0101164
A62951	0123339
A63001	0101156
A63015	0201170
A63715	0400108
A63957	0325290 EE-TECH
A63958	0702272
A63960	0202209
A63961	1125200
A63962	1124342
A64147	2023212
A64164	0402170
A66261	1424366
A66918	1102171
A66919	0125349
A66920	0125349
A66921	1224272 EE-TECH
A67125	1901098
A67126	2101138
A67319	0201112
A68168	0123324
B41228	0302258
B42870	1118132
B42871	0402264
B42872	0102112
B42873	1118105
B46183	1401204
B47212	1118153
B51148	0223201
B51243	1118157
B63961	1125200
B63962	1124342
B64684	1101573
B66261	1124364
BELARUS	
22490	0701095
D37E1308021	0173235
BIG BUD	
206996	2988238
BISO	
460189	1837270
935101080	2602445
9351000100	0200098
9351001200	0202187
9351001300	0702198
9351003200	0202245
9351004200	0202275
9351004300	0202275
9351004600	0302281
9351004700	0302281
9351005200	2602288
9351005300	0902289
9351005400	0702292
9351005500	0702292
9351005900	2602304

OE	
9351006300	0202305
9351006400	1402317
9351006700	0302326
9351007000	1402340
9351007700	1902351
9351008000	0202361
9351008200	2602367
9351008300	0302369
9351008400	1902376
9351008700	1602382
9351009900	0102415
9351010200	2602420
9351010700	0202442
9351010900	2602445
9351011100	1402451
9351011200	2602457
9351011500	0202493
9351012000	1319233
9351012600	2619314
9351012700	2619331
9351012800	2619333
9351012900	2619333
9351013400	1423274
9351013500	2619370
9351013800	2619389
9351014300	2619416
9351014800	2619440
9351015000	1519452
9351015300	2619504
9351015400	1519526
9351015500	2619545
9351015600	2619545
9351016300	0172235
9351017400	1423274
9351017600	2623298
9351017900	0223304
9351019000	1523417 EE-TECH
9351019300	1523417 EE-TECH
9351019600	2023419 EE-TECH
9351019800	0323426
9351019900	0323426
9351020400	1323464
9351020600	0323486
9351020700	2623489
9351021000	0323507
9351021200	0223515
9351021300	2623523
9351021400	2623538
9351021600	0223572
9351022100	0325197
9351022200	1426198
9351022500	1901133
9351023100	0101158
9351023200	0101158
9351023400	0101164
9351024200	1401412
9351027400	2623599
9351028600	2623456
9351028700	0423318 EE-TECH
9351029900	0227294
9381028500	1623311 EE-TECH
393222730000	0102125
990601371026	2602287
990606311505	1423274

OE	
990606360026	1623311 EE-TECH
990606361523	1623311 EE-TECH
990606361526	1623311 EE-TECH
990606500005	1523417 EE-TECH
990606503026	1523417 EE-TECH
990606516205	0323426
990606582526	1423476
990606616005	1923499
990606631005	2623512
990606714026	0223572
990610203205	0101158
990610240005	1601185
99060642302633500	0223357
99060650622633500	2023419 EE-TECH
99060660002638400	2623489
10VX00A	0302369
39.322.273.00.00	0102125
600A01	0102174
600A02	1102171
600A022	0102161
600A02B	1102171
600A03	1402317
600A04	0302345
600A05	1402307
600A07	2002323
600A09	0102176
600A11	2902164
600A14	0702151
600A17	0102184
600A701	0202332
600A702	0302326
600A715	0202332
600A750	2602381
600J07	0202230
600J20	1402307
600P01	1401101
600P02	2501076
600P03	2601079
600P04	2601077
600P09	0201092
600P12	2601082
801D04	2639124
9351.0001.00	0200098
9351.0012.00	0202187
9351.0013.00	0702198
9351.0032.00	0202245
9351.0042.00	0202275
9351.0043.00	0202275
9351.0046.00	0302281
9351.0047.00	0302281
9351.0052.00	2602288
9351.0053.00	0902289
9351.0054.00	0702292
9351.0055.00	0702292
9351.0059.00	2602304
9351.0063.00	0202305
9351.0064.00	1402317
9351.0067.00	0302326
9351.0070.00	1402340
9351.0077.00	1902351
9351.0080.00	0202361
9351.0082.00	2602367
9351.0083.00	0302369
9351.0084.00	1902376

OE	
9351.0087.00	1602382
9351.0099.00	0102415
9351.0102.00	2602420
9351.0107.00	0202442
9351.0108.00	2602445
9351.0109.00	2602445
9351.0111.00	1402451
9351.0112.00	2602457
9351.0115.00	0202493
9351.0120.00	1319233
9351.0126.00	2619314
9351.0127.00	2619331
9351.0128.00	2619333
9351.0129.00	2619333
9351.0134.00	1423274
9351.0135.00	2619370
9351.0138.00	2619389
9351.0143.00	2619416
9351.0148.00	2619440
9351.0150.00	1519452
9351.0153.00	2619504
9351.0154.00	1519526
9351.0155.00	2619545
9351.0156.00	2619545
9351.0163.00	0172235
9351.0174.00	1423274
9351.0176.00	2623298
9351.0179.00	0223304
9351.0183.00	1623311 EE-TECH
9351.0190.00	1523417 EE-TECH
9351.0193.00	1523417 EE-TECH
9351.0196.00	2023419 EE-TECH
9351.0198.00	0323426
9351.0199.00	0323426
9351.0204.00	1323464
9351.0206.00	0323486
9351.0207.00	2623489
9351.0210.00	0323507
9351.0211.00	2623512
9351.0212.00	0223515
9351.0213.00	2623523
9351.0214.00	2623538
9351.0216.00	0223572
9351.0221.00	0325197
9351.0222.00	1426198
9351.0225.00	1901133
9351.0231.00	0101158
9351.0232.00	0101158
9351.0234.00	0101164
9351.0242.00	1401412
9351.0274.00	2623599
9351.0286.00	2623456
9351.0287.00	0423318 EE-TECH
9351.0299.00	0227294
9381.0285.00	1623311 EE-TECH
99.060631-1505	1423274
99.060650-0005	1523417 EE-TECH
99.060650-3026	1523417 EE-TECH
99.060650-622633595	2023419 EE-TECH
99.060651-6205	0323426
99.060660-002638455	2623489
99.060663-1005	2623512
99.060671-4026	0223572
99060650-0005	1523417 EE-TECH

BISO / BIZON / BRAUD

OE	Gates
99060650-3026	1523417 EE-TECH
99060650-622633595	2023419 EE-TECH
99060651-6205	0323426
99060660-002638455	2623489
99060671-4026	0223572
BIZON	
613131	1200149
614169	1501398
619170	0110162
659065	2023280 EE-TECH
825117	1225316
5056759	0202172
9515075	0310193
9515076	0310157
9818873	0325248
84023912	0300260
84026668	0302224
84995733	1272282
84995734	1272212
84996133	0423318 EE-TECH
89819676	2002228
1374310409	2024241 EE-TECH
51101131525	0200118
51101131570	1900121
51101132800	0300212
51101171335	2601106
51101171375	0201109
51101171670	1223167
51101171750	2101138
51101171981	0301155
51101172438	1901188
51101222525	0702198
51101255970	1230485
51101321750	0210149
51101622375	0315204
51102171670	1223167
51102173550	0223304
51102174562	2623384
51102174610	1923387 EE-TECH
51103172120	0124204
51103172380	1224221
51103172650	2024241 EE-TECH
51103173062	1224272 EE-TECH
51103173220	0324284
51104172270	1225216
51104173940	1225340
51651132765	1900211
51651171700	1901133
51651171930	0101151
51651172413	0101187
51651172450	☎
51651173550	1523306 EE-TECH
51651173861	1201291
51651173900	☎
51651175000	1523417 EE-TECH
51651221725	0202139
51651221981	0902157
51651222010	☎
51651222360	0102184
51651222413	2002190
51651222667	0202209
51651222800	0102216
51651222845	0202222
51651222864	☎

OE	Gates
51651223505	0702272
51651223550	☎
51651321480	0210131
51651453200	0312262
51651502130	0213186
51652171820	1423179
51652172200	1423207
51652172210	1423207
51652172500	0323229
51652174225	0223357
51652175000	1523417 EE-TECH
51653173180	1424282
51653173762	0724325 EE-TECH
51654172420	1425228
1374-310-409	2024241 EE-TECH
2HBBP-3750	1423320
2HBBP-4650	1923387 EE-TECH
3HBBP-2100	1624201
3HBBP-2370	1224221
3HBBP-2690	1224245
3HBBP-3050	1224272 EE-TECH
3HBBP-3250	2124287
4HBBP-2286	1225216
4HBBP-3900	1225337
5040/42-008/0	1401110
5040/42-009/0	0330293
5040/42-010/0	2330335
5040/42-011/0	0110126
5040/42-012/0	0213186
5040/42-013/0	0381385
5040/42-014/0	0330188
5040/42-015/0	0312263
5050/92-038/0	2954256
5056/756	0130272
5056/757	2601082
5056/759	0202172
5056/764	1901115
5056/765	0102231
5056/766	1454423
62X25-2300	0315203
9700-10724	0330336
9700-10725	0130307
9700-10730	0110126
9700-11284	0201215
9700-11285	1201153
9700-11591	1254331
9700-11592	0130272
9700-11593	0101085
9700-11594	0302241
9700-11595	0102176
9700-11596	1301116
9704-10728	0330188
9704-11283	0101285
9704-11290	1901283
9704-11291	2101138
9704-11293	2602222
9704-11512	0201177
9704-11667	0202404
9720-10727	0312263
9720-10729	0213186
9724-11280	0213197
9724-11281	0315203
9724-11289	0130234
9724-11292	0201264

OE	Gates
9725-11287	1401248
9725-11382	0101222
A1400	1900106
A2000	1900151
C2800	0502215
H25X16-6065	0213197
HA-1060	0172217
HA-2800	0300212
HB-1060	0101085
HB-1180	0701095
HB-1400	0401111
HB-1750	2101138
HB-2120	1601166
HB-2540	1901196
HC-2585	0302197
BRAUD	
92100	0702225
92101	1901115
92112	1302519
92113	2001178
92114	0311182
92115	0202320
92116	1311199
92117	1302540
92119	0302248
92120	0402264
92121	0302197
92122	1402479
92123	0402155
92124	0301243
93028	0102174
93034	1383235
93064	1302669
93065	0210103
93066	0102125
93067	0202320
93068	0301183
93071	0302512
93072	0202245
93073	0112200
93074	2301262
98577	1311198
98583	0302326
98587	1371317
101735	0339302
203923	2639325
10233923	1339327
20001729	0323229
20001730	0323233 EE-TECH
20001731	1472236
20001732	0201096
20001733	1319233
20001735	1319233
20001736	0172219
20001738	0302281
20001744	0227262
20001747	1313189
20001748	2625318
20002102	2603269
20002103	1303384
20002103	1303384
20002104	1371231
20002105	1330221
20002105,1	1430213

OE	Gates
20002106	1430198
20002106,1	1430198
20002114	0371339
20002115	1303462
20002118	1472236
20002118,1	1472236
20002122	0173227
20002124	1472236
20003074	0201264
20012976	2027370
20012986	1923499
20012987	2623384
20073421	2625318
20092101	1301116
20092116	1311199
20092119	0302248
20092120	0402264
20092120	0402264
20092121	1902204
20092122	1402479
20092123	0902157
20092124	0101242
20093065	0210103
20093066	0102129
20093068	0301183
20093069	1402158
20093069,1	1402158
20093072	0302248
20093073	0112200
20093074	0201264
20098575	1300092
20098580	0202626
20098583	0302326
20098584	2670384
20098587	1371317
20098588	0713182
20098590	1901251
20098592	0101151
20098592,2	1401144
20098593	0402264
20098598	0213197
86982450	1585272
910101735	0339302
910203923	2639325
920001727	1513221
920001728	0303409
920001729	0323229
920001730	0323231
920001731	0422134
920001733	1319233
920001734	0324230
920001736	0172219
920001738	0202275
920001744	0227262
920001746	0300223
920001747	0113191
920001748	2625318
920001749	0102174
920002102	2603269
920002103	0303378
920002105	1430213
920002106	1430198
920002108	0303307
920002109	0311114

OE	Gates
920002110	0313235
920002112	0102129
920002114	0371339
920002118	1472236
920002119	1430228
920002122	0173227
920002123	0119278
920002124	0372231
920012975	1513240
920012976	2027370
920012977	0302345
920012979	1530164
920012981	0372234
920012982	1472238
920012983	0300342
920012984	2623194
920012986	1923499
920012987	2623384
920012991	0173234
920012997	1423216
920016255	1472238
920019549	1272212
920019570	1472227
920019588	0785269
920019592	0172208
920092101	0401111
920092107	0702225
920092113	0201177
920092114	0311182
920092116	1311199
920092118	0312172
920092120	0202261
920092121	1402293
920092122	1402479
920092123	0402153
920092124	1401241
920093025	2002135
920093029	2902231
920093036	0172219
920093044	0102181
920093046	1602240
920093048	0173200
920093065	0210103
920093066	0302124
920093069	0102161
920093072	1402243
920093073	0112200
920093074	0201258
920098575	0172225
920098577	1311198
920098584	2670384
920098587	1371317
920098588	0713182
920098592	1401144
920098593	0702263
920203923	1339327
20002102100	2603269
20002103100	1303384
20002104100	1371231
20002105100	1430213
20002106100	1430198
20002118100	1472236
20092120100	0402264
20093065100	0210103

OE	Gates
20093069100	1402158
20098587100	1371317
20098590100	1901251
20098592199	1401144
20098593100	0402264
BUHLER	
3040286	0172206
3290148	0285299
86030708	2585303
86031366	0372203
86033867	0389316
CASE INTL. HARVESTER	
477	0172219
3760	0172195
6019	0372240
6096	0372255
6097	0200073
6135	0372255
6883	0172219
10148	0272218
16864	0272210
19344	0422134
31170	2502096
55335	1401306
55574	1202193
55970	0210129
56226	0502165
57596	0402159
59760	0172219
61416	0399322
61428	0372223
61451	0372232
61464	0172235
61473	2501076
68073	0373225
70738	0172208
73430	0102114
74208	0172188
74209	0172188
83695	0372242
130072	0372262
178440	0372223
178472	0272210
196371	0701422
217638	2484242
703101	0302302
855007	1402291
855064	2002135
855403	1402217
855510	0173217
855528	0372232
855726	0702225
856187	2602304
856286	0323285
856310	0102231
856401	0202209
856641	0302197
857029	0173227
857219	2002253
857938	0201090
901111	0173224
903050	0373225
904029	1923499
904031	0323519

CASE INTL. HARVESTER

OE	Gates
912196	0173220
913631	0173207
938787	0372223
977505	1437374
977506	1437256
1000157	0172192
1101811	0223201
1104002	0401111
1109601	1430265
1111083	2137163
1111227	1819240
1111532	0300223
1111604	0172216
1111612	0172225
1111725	1437256
1111942	1519244
1112605	0118122
1113116	1423267
1113390	0269238
1113501	1423192
1113864	1837267
1113880	1837270
1113936	0372240
1113942	0200328
1114568	0227294
1114576	0223543
1169411	1849518
1169436	0226330 EE-TECH
1169485	1849528
1169508	1871332
1169983	1371317
1169991	0799367
1170003	1849667
1170028	0125322
1170044	1824172
1170052	1826176
1170060	1824175
1170085	1871280
1170093	0799363
1170124	0774718
1170140	1323464
1170181	0799365
1170198	1423329
1170204	0749465 EE-TECH
1710326	0702199
1791046	0272247
2700102	1400066
2700262	2124361
2853208	0785284
2855970	0285281
2856151	0785288
2929681	0172214
3030103	0372223
3034942	0285249
3034943	0285257
3037425	2388232
3040291	1272212
3140053	0372240
3140085	0173232
3145900	0172195
3288812	0785269
3288922	0185275
3288999	0285280
3289078	0785284

OE	Gates
3289224	2785290
3289279	0285292
3289481	0285297
3289593	0285301
3289604	0285301
3289768	0285309
3290158	0285306
3902309	1585280
3905866	0185275
3911562	0285268
3911567	0785288
3944840	2885308
4106637	0326206
4113518	0326303
4114742	1449471
4119434	0325425
4133180	0371357
4470060	1824175
4716470	0372193
5095203	0373221
6500116	0272247
6500261	0372240
7540290	0172225
7540344	1472273
7540347	0372255
7540348	1472236
7540351	1472251
7540352	1472227
7543000	0372199
7543007	0122155
7543008	0172195
7543009	1472264
7543010	0172192
7543011	1699317
7543013	0172208
7543014	0272210
7543015	0422134
7543016	0372232
7543017	0372240
7543019	0399322
7543020	0172220
7543021	0372309
7543022	0173189
7543024	0372309
7543025	0372280
7543026	0122155
7543027	0372297
7543029	0272247
7543030	0272247
7543036	0372255
7543037	0372286
7543050	0372260
7855323	0323175
7855331	2602213
7855349	2823241 EE-TECH
7855604	2602194
7855745	0302219
7855810	1624318
8403693	0372223
8602680	0285251
11170198	1423329
20471094	1813327
20476355	0737236
20476402	1819305

OE	Gates
20797305	1824328 EE-TECH
20797313	1823248
20801996	2319270
20812000	0323377 EE-TECH
20953061	1437256
21189838	0702199
21361633	2602304
21362771	0202187
21365202	1423292
21365205	1423292
22005824	1637196
30601915	0724321 EE-TECH
31295188	0124297
31301147	0323453
31302068	0173189
31302076	0785319
31310695	0787324
31317917	1401199
31318645	0725404
31323185	0701312
31343437	2023197
31400010	0122155
47135840	0385263
47360559	☎
47361246	0123242 EE-TECH
47411931	0707132
47419045	2602244
47441074	0224406 EE-TECH
47455617	☎
47463606	0707134
47490848	0372262
47490848	0372262
47506727	0342200
47569912	1985296
47597575	1523259
47616842	1925345
47623161	☎
47628753	☎
47635775	☎
47635791	☎
47655498	1401212
47708569	0372262
47754793	0740362
47998736	0251498
48166008	0385306
51200857	0172220
51400100	0273217
60038063	0724347 EE-TECH
60040580	0173213
60049708	1523306 EE-TECH
60067590	0324377
60067605	1523306 EE-TECH
60067613	1513207
60067638	0137218
60068286	1824294 EE-TECH
60121276	2623278
60121284	0213197
60121292	2787387
60124334	1425204
60143490	0737337
60143505	1118090
60168160	0224406 EE-TECH
60183586	0213198
60186515	1824328 EE-TECH

CASE INTL. HARVESTER

OE	Gates
60187034	0173197
60187276	1923257 EE-TECH
60187284	0702263
60190778	0302240
60190786	1902204
60206971	0372255
60206988	0703353
60500044	0200076
60500116	1443193
60506933	1473236
60517253	1472236
60518672	1453293
61004680	0125349
61009074	0324279 EE-TECH
61009082	0337348
61009396	2137163
61009402	1837245
61011077	2001178
61017105	0783342
61020978	2024376
61020986	0223304
61029584	0273217
61033443	1537243
61036454	0323270 EE-TECH
61067790	0101285
61067791	0101285
61068927	1426260
61068935	0724290
61068943	0726209
061068943	0726209
61068951	1423320
61068968	0749463
061068968	0749463
61068976	1118090
61069028	0737347
61069036	0787324
61211331	2787387
71394352	0709234
71456988	1423394
72023318	2124287
72023326	1524207
72023342	0137334
72023350	2601319
72023367	0737236
72023375	0372262
72023406	1437256
72023422	1901283
72023430	2901252
72023463	1125200
72032698	1118090
72032720	1437242
72032737	0224406 EE-TECH
72032745	0737236
72032753	0324198
72032761	0737236
72032786	0172211
72032800	1573238
72049753	1453293
73032817	0372231
75400142	0173197
77000482	1423274
84137716	0740362
84150266	1472264
84154916	☎

OE	Gates
84163222	1501475
84185033	0372232
84185053	0372223
84194650	0714650
84214719	0101085
84214729	0101088
84214730	0372244
84214731	0201092
84214742	0102276
84226318	0202230
84230075	0402264
84230076	☎
84238446	1911159
84240788	0372242
84243629	0272210
84247607	0385295
84256369	3027274
84257945	0385306
84271496	0172195
84312027	0785256
84320459	0302227
84332126	1201153
84346830	0285295
84365262	0747387
84371063	0173214
84376536	0323229
84406044	0740417
84411381	3023178
84412878	0785267
84423385	0285345
84452979	1401194
84455758	1201153
84455766	1201153
84514757	1424238 EE-TECH
84518497	0187250
84534020	☎
84548651	0723248
84586129	0740417
84590653	0285292
86013886	☎
86517954	1400071
86610858	0351568
86610859	0351272
86627791	1425191
86627795	0302197
86627796	1423320
86633896	0202182
86975809	0702295
86998066	Chain
87012453	1425257
87020285	1902206
87027209	0302227
87041731	0302224
87041732	0702225
87041779	2002211
87281911	Chain
87301455	0714237
87301964	0386352
87311867	0172206
87330894	0723242 EE-TECH
87330903	0723248
87332159	0757355
87332161	0757373
87354138	0285293

OE	Gates
87354141	0172206
87373569	0172214
87397416	2685289
87399980	0387233
87399981	0387232
87402830	0285316
87427363	1885281
87429954	0172230
87441268	0785319
87476487	0705492
87484708	1901136
87518813	0400081
87526140	0372255
87528118	0317149
87528805	0302281
87549556	0224243 EE-TECH
87549557	0727338
87564452	0723248
87564549	0723248
87566055	1402291
87583440	0751440
87583785	0700147
87583907	0251907
87584814	Chain
87584827	Chain
87607871	1100162
87608414	1501475
87615553	0751553
87629601	0744389
87629602	0744360
87630521	1585272
87642957	2602244
87643267	0173223
87671291	0372262
87681147	0285273
87705737	0785262
87714971	0751553
89831750	0372262
98027803	1425183
98029076	1123251
98029103	1413201
98031256	1425256
98031590	1424253
98039691	0101105
98039778	1826316 EE-TECH
98041779	1124364
98043775	0724399
98045743	0371357
98046372	0372244
98473706	0173224
197810984	0272210
204710860	2699315
204763550	0737236
247635500	0737236
504078066	0285348
504078068	0386278
504212528	0342161
504368979	0187250
540000024	2623512
601183586	1413193
685121765	0289299
700707586	0799430
700708217	0372223
700710498	0101156

CASE INTL. HARVESTER

OE	Gates
700711061	0724171
700711852	1423361
700711883	0300241
700714140	1118132
700714715	1400066
700715387	0200076
700715435	0272215
700716005	1425183
700717131	0323238
700717578	1201153
700717699	1400119
700717877	0323437 EE-TECH
700717886	0200125
700718206	1900136
721393736	0757372
761098513	0324261 EE-TECH
770000482	1423274
770000490	2623599
770000722	1423274
770000730	1923499
770000827	0323233 EE-TECH
770001153	0323519
770002330	2623512
873541380	0285293
873541410	0172206
920012988	0201102
944032610	0785286
1374310380	0312262
1374310401	1901188
1374310407	0124204
1374310421	0213186
4031832698	0713295
4032802262	0224223 EE-TECH
4032804396	0713308
4032807784	0757372
4032808262	0224223 EE-TECH
4131775313	1819202
4131781055	0323173
4131781578	1319233
4131781586	1819240
4131784025	1423267
4150513573	1423192
4221613143	1430265
4240023362	1813327
4240043405	1118090
4240043413	0337227
4240044270	1837245
4240044295	0337278
4240044301	0737236
4247040968	1224268
4250121860	1899278
4250121872	1813249
4250121877	1413193
4250121885	1813249
4250129730	1819365
4250129747	2319270
4250129755	0319285
4250700007	1837267
4254138824	1319233
4260699977	1523306 EE-TECH
4260699985	0324377
4260700001	0137218
4260700007	1837267
4260700015	2787313

OE	Gates
4260700023	1319233
4260700031	0300223
4260703926	0730313
4260703942	1824294 EE-TECH
4260715183	0724347 EE-TECH
4260780023	1837267
4264715364	1902204
4270717737	1425204
4270722244	1413193
4270727737	1425204
4280121885	1813249
9911860435	0730313
9911860628	0102184
9911861444	2319270
9911861493	1437204
9911861508	1437256
9911861524	1319233
9911861532	1519244
9911861557	0337304
9911861573	0337404
9911861725	2137163
9911861758	2619314
9911861846	1319233
9911861854	2119259
9911862035	0217140
16200006001	0172201
41311784025	1423267
51651170975	2601079
51652171800	0387298
130100130041	0422134
130100130072	0372262
130300060002	0422134
130300060021	0422134
132000060012	0372242
132000130020	0172201
132000130021	1472236
140100060002	0173232
140100130132	1472238
142000060011	1472238
142000060012	0372240
142000130005	1272212
162000060007	0272247
162000130003	0372245
162000130004	0372203
162000130046	0172201
190003140053	0372240
190003140062	0372232
190003140073	1472251
190003142291	0373201
190003142332	1473203
190003142340	1473236
1301000600181	0173234
1301001300411	0422134
1320001300201	0172201
1320001300211	1472236
1399001300031	0372240
1401000600021	0173232
1401001301311	0372260
1401001301321	1472238
1411000600141	0173234
1420000600111	1472238
1420000600121	0372242
1420001300041	0272210
1420001300051	1272212

OE	Gates
1620000600011	0372242
1620000600061	0372242
1620000600071	0272247
1620001300031	0372245
1620001300041	0372203
1620001300741	0172208
00-111160-4	0172216
00-111161-2	0172225
00-111194-2	1519244
00-410663-7	0326206
010288AB	0173190
011139AB	0422134
04-114742	1449471
04-119434	0325425
055111A	0301141
055541A	0102108
057604A	0302098
061451A	0172235
061463A	0372258
069998T1	0173247
072729T1	1573238
09802AB	0302098
106465C1	0200098
106990C1	0172220
106991C1	0372240
10AV1025	0273215
1113097C2	0244357
11466R	0101107
116029A1	☎
1213572C1	0372257
123305A1	0701490
123306A1	0301147
123307A1	0201155
124572A1	0123224
124573A1	0723228 EE-TECH
124573A2	0723228 EE-TECH
1250587C1	0272215
1251214C1	0401279
1253324C2	0202172
126496C1	0372199
1276589C1	0202310
1276634C1	1401110
1276707C1	0201177
1285320C1	0123153
1288899C5	0324185
1288900C3	0323183
1302174C1	0714203
1302174C2	0714203
1304060C2	2602288
130724C91	0372268
1308489A1	0744379
1308489C1	0744379
1308489C2	0744379
1308489C2A	0744379
1311486C1	0110163
131201C92	0201123
131303C91	0122155
131304C1	0122155
1313094C1	0727299
1313095C1	0744331
1313095C2	0744331
1313097C1	0244357
1313097C1	0244357
1313097C2	0244357

CASE INTL. HARVESTER

OE	Gates
1313097C3	0244357
131403C1	0173210
1315068C1	0744328
1315074C1	0744382
1315074C2	0744382
1315168C1	0744397
1315169C1	0202285
1315226C1	0202168
1315244C1	1901133
1315265C1	0323229
1315266C1	1123251
1315315C1	0202139
1315C74C2	0744382
1316573C1	0102189
1316573C2	0102189
1316574C1	1402293
1316574C2	1402293
1319245C1	1902206
1319245C2	0202209
132013C1	0172192
1321564C1	0102123
1321564C2	0102123
1321565C1	1602150
1321565C2	0402155
132374C1	0701268
132407C1	1699317
1325050C1	0702292
1330311C1	2101138
1330311C2	1401137
1330499C1	0724325 EE-TECH
1336591C1	☎
1336609C1	0202245
1338328C1	☎
13394L	0372257
1346658C2	1401234
1347157C1	0123242 EE-TECH
1347160C1	0723264 EE-TECH
1347387C1	0323231
135462C1	2001178
135594C1	1401378
1374-310-380	0312262
1374-310-400	0101107
1374-310-401	1901188
1374-310-407	0124204
1374-310-421	0213186
1406513R1	0702292
1406929R1	2625326 EE-TECH
1407035R1	0501273
1407123R1	0110162
1407324R1	0302220
1407982R1	0101151
1408855R1	0702212
1409652R1	0211203
1410094R1	0812202
1410106R1	1403307
1410279R1	0302227
1410462R1	0203238
1411204R1	0300230
1413433R1	1601120
1415197R1	0213197
1416604R1	1425303
1417141R1	2826364
1418304R1	0302224
1419233R1	0172216

OE	Gates
143441R2	0172216
149635R1	0372223
150433C1	☎
150436C2	☎
150816C1	1403323
151529R1	0173222
151529R2	0373221
15166KA	1401234
15166KB	1401234
1532030R2	0172235
153301C1	0202222
153359C1	0301355
1537104C1	0372255
1541569C1	0310155
1541699C1	0323225 EE-TECH
1541700C1	0723228 EE-TECH
1541702C1	0744362
1546117C2	0724190
1546118C1	0723162
156444C1	0301243
158797C1	0702198
159267C1	2024376
160173C1	0102184
1607227C1	0372255
160870C1	1602382
160871C1	0302251
161820C1	1401384
161821C1	1401401
16397KAA	1401145
164006C1	0172217
164550R2	0172217
164899C2	0309132
164900C1	0709118
164999C2	0709118
164999C92	0709118
165053C2	☎
1651399C1	0785267
1656676C1	☎
16648K	0104352
166598C2	0724423
167031C2	1900097
167099C1	☎
168665C2	1524427
168725C1	0100160
170948C1	1468350
170954C11	☎
171101C2	2625231 EE-TECH
171130C1	1513240
171226C1	0724370 EE-TECH
171434C1	2124361
172230C1	1903336
172360C1	0100159
173110C1	0711207
173447H1	0172225
174509C1	0324299
174614C2	1402479
174642C1	☎
175545C1	0301301
175585C1	0200073
176565C1	0302326
176566C1	0202332
176567C1	0302326
176576C1	1402373
176577C1	1402373

OE	Gates
176657C1	☎
177499C1	0202528
178019R1	1602195
178763C1	☎
178936C1	☎
179007C1	1901136
179317C2	2501308
179317C2B	2501308
1806189C1	0172214
1806189C1	0172214
181012C1	0723221 EE-TECH
181013C1	0123242 EE-TECH
181055C1	0705388
181055C11	0705388
1813095C1	0744331
181433C1	0202305
181717C1	2623538
181718C1	1901196
182619C1	0702292
182945C1	2602288
182945C1A	2602288
182945C1B	2602288
183049C1	0705586
184796C1	1202193
186377C1	0727301
186509A1	0705492
186509C1	0705492
186509C2	0705492
1866324R1	0202209
187415C2	2002211
188213C1	2602244
188716C1	0302220
189219C1	2610134
189662C2	0714216
190502R1	0422134
191241C1	0744328
191241C2	0744328
191241C3	0744328
191241C3X	0744328
191244C1	0724321 EE-TECH
191244C2	0724321 EE-TECH
191288C2	0102184
191288C3	0102184
191290A1	0102257
191290C1	0102257
191291C1	0702274
191305C1	0102216
191305C1A	0102216
191305C2	0102216
192738C1	0744366
192806C1	0200073
1932738C1	☎
193923C1	0714185
193923C2	0714185
193923C3	0714185
193923C4	0714185
193945C1	0714216
193945C2	0714216
194528C1	0744354
194528C2	0744354
195143C1	0302258
195396C2	0710159
1958439C1	1401209
1962770C1	0173212

CASE INTL. HARVESTER

OE	
196370C1	1401405
196371C1	0701422
196371C2	0701422
1966512C1	0173234
1970115C1	1202193
1970116C1	0302197
1970116C2	1602195
197411C1	2002253
197412C1	2002253
197412C2	2002253
197414C1	0302281
197414C2	0202275
197480C1	2602304
197480C2	2002283
197482C1	0302302
1979606C1	0201112
1979606C2	1401113
1979607C1	☎
1981517C1	1401209
198217C1	☎
1989216C1	0302262
1989217C1	0302281
1989679C1	0702199
200380C1	0202187
200380C2	2002190
200381C2	0302197
201092C1	0301147
2016338C1	0301131
203170C1	2601323
203612C1	0702225
203644C1	1401180
203651C1	0201102
203658C1	0302154
208885C1	☎
209002C1	0701268
209038C1	1900121
20K	1423274
210185C1	0703166
210628C1A	1401161
210628C1B	1401161
214522C1	0768273
214878C1	0173205
217564C1	0368270
217636C1	1400216
217698C1	2002190
217699C1	1401208
217699C1A	1401209
217699C1B	1401209
217700C1	2602213
217701C1	0201173
217702C1	0302240
217703C1	0101158
218509A1	0372240
222203C1A	0301141
222203C1B	0301141
225532R1	0173220
228316A1	0372204
228332A1	0372204
228332A1A	0372204
228332A2	0372204
228898A1	1573242
229284R1	0372240
235414A1	0372203
236161R2	0273228

OE	
236161R2B	0173227
236572R2	0373225
238215A1	0372242
238215A1A	0372242
238215A2	0372242
238215A3	0372240
238989A1	0272210
23898K	0301117
238990A1	0372244
241895A1	0173245
241895A2	0173245
242268R1	0372231
242269R2	1272212
242270R2	0172208
243373A1	2685289
244420A1	0714185
244420A3	0714185
244420A4	0714185
244422A1	0714216
244422A3	0714216
244422A4	0714216
244423A1	0766322
244423A3	0766322
244423A4	0766322
244423A5	0766322
247426A1	0102189
247426 1	0102189
247430A1	0702199
248265A1	0172208
255402A1	0172195
258275R21	1402127
259289A1	0173212
26267K	0202230
274478R11	0202139
274705R1	☎
280210C2	1472238
288202C2	0172214
288648A1	1901094
293956A1	0372203
294462A1	0172221
299659A1	1473236
301111A1	1402217
301525A1	0172206
301595A1	1400072
3020346R1	0372232
3034716R1	0422134
304019R1	0422134
3043167R1	0372242
3050382R1	0173231
3055262R91	1472251
3055525R1	1472236
3055526R1	0122155
3055715R1	0372232
3055715R91	0372232
3059904R1	1472251
306632R1	2602103
306658R1	0101099
306910R1	0101099
308712A1	0372203
310081R2	1472227
3103014R2	1102110
3113329R1	0172253
3116685R1	0372232
3119750R1	0173198

OE	
31275280N1	0173189
3128140R1	1472251
3129139R1	0172253
3129140R1	1472251
3136251R1	0372234
3136258R1	1472236
3136421R1	0272247
3138663R1	0372240
3138935R1	0372242
3139157R91	0372255
3144098R91	0372260
3144678R1	0372234
314606C2	0173240
3155068R1	0711194
3155107R1	0210244
3155127R1	1403222
3155177R1	2002211
3155178R1	0302302
3156215R1	0312172
3157009R1	2612205
3157094R1	0203328
3157600R1	1405255
3157738R1	0703313
3157738R2	0703313
3157739R1	0301277
3157741R1	1403239
3157994R1	1602254
3158242R1	2612205
3158455R1	0130307
315969R1	1472227
3159827R1	0172208
316250R1	0422134
3167149R1	0727272
3167189R1	0713301
3167361R1	0302200
3167361R2	0302200
3167489R1	2902164
3167653R1	0725342
3167653R2	0725342
3167797R1	0202305
3168030R1	0715183
3168030R2	0715184
3168030R3	0715184
3168669R1	2001162
3169965R91	☎
3170159R1	1401101
3170210R1	0202235
3171173R1	0202285
3172232R1	1901115
3172275R1	0705201
3172276R1	0710117
3172404R1	1901196
3173115R1	0730343
3173164R1	0202285
3173480R1	0730341
3173717R1	0702272
3173726R1	0724340 EE-TECH
3173832R1	0712295
3175036R1	0703249
3175036R2	0303257
3175078R1	1424331
3175110R1	0713169
3175336R1	0202235
3175432R1	1602254

CASE INTL. HARVESTER

OE	
3176321R1	0305204
3176449R1	☎
3176489R1	0102163
3177182R1	0724325 EE-TECH
3179516R1	0713299
319904A1	0702198
319905A1	0502215
320344A1	0172221
3218043R1	0172219
3218477R1	0172225
3218802R1	1699317
3218951R1	1472236
3218951R1	1472236
3218952R1	0372242
3228279R1	0172225
3228282R1	0272218
3228287R1	0372244
3228287R91	0372244
3228641R1	0122155
323987R1	0172225
325289A1	0342155
325290A1	0284278
32542D	0902122
326998R1	1401110
328502R1	0701095
328531A1	0172206
328539R1	0902122
328540R1	0202113
329588A1	0172221
332562R1	0372223
335004A1	0372245
336901A1	0372223
336902A1	0372203
336903A1	0372204
345013R1	0101088
352095C1	0372232
3522468M3	0172206
355478C91	0173234
358998C91	0373262
359688A1	0172201
362828R1	0372199
363599R1	1102110
364925A1	0172208
365686R1	0172208
366776A1	0173217
367697R1	0173217
368079A1	0372204
369290R1	0372223
372596R1	1472227
376230C1	0173197
376230R1	0173197
3777748M2	0172206
378113R1	1472227
378113R2	1472227
379461A1	0172206
379966R1	1472238
379966R2	1472238
380060R1	1401127
382228R1	0172235
38331K	0200143
383644A1	1602150
385120R1	1401129
385120R2	1401129
385674R1	0422134

OE	
385738R1	0422134
386160R1	0173200
386199A1	0302136
387920R1	0173219
390195A1	0744382
390460R1	0302134
393415R1	0172225
393750A1	0744379
393751A1	0244357
395462R1	0372280
395463R1	0172253
395539R1	0372255
3955539R1	☎
396472R1	0372258
396543R1	0372257
396829R1	0172219
396830R1	0372232
397175R1	0172225
397397R1	0372272
399480R1	0172195
400427A1	0357388
401128R1	0372245
401128R2	0372245
401691R1	0172201
401960R1	0173197
402253R91	0200128
402368A1	0757404
402370A1	0357383
403303R1	0173240
403348R1	0372223
403580R1	0173219
403617R1	0172225
403617R1B	0172225
403617R2	0172225
406097R1	0372244
413159A1	0714237
413159A2	0714237
427205C91	0372231
432016A1	0172221
434493A1	0172220
434493A2	0272218
434493A3	0272215
435074A1	0372240
440085A1	0172221
440498A3	0323233 EE-TECH
452197R1	0201090
452864R1	2602125
462133R1	0102176
464351R1	0172192
473468R2	0372271
475610R1	0173191
477599R2	0372280
480240C91	0372255
485610R1	0172214
486543R3	0902122
487043R1	0173191
487994R1	0372204
487996R1	0372203
488077R1	1472227
488082R1	0372234
488082R2	0372234
48878D	0172195
489399R1	0372286
490489R2	0372288

OE	
492102R1	2501308
492103C1	0172201
49341D	0172201
493649R1	1472273
49364R1	1472273
493650R1	0372231
4L290	0172192
523030R2	0173240
52318DA	0172189
527470R1	1472251
527621R1	0173230
528419R91	0301131
530076R1	0372257
530186R1	0372257
532030R2	1473236
532031R2	1573238
532746R1	1401125
534310R1	0372255
534311R1	1472251
537072R1	1401125
537072R91	1401125
537072R92	0201124
543394R2	0203194
54857DB	0372193
54867D	0372203
549107R1	0272210
549108R1	0172208
549599R1	1472238
549609R1	0372231
549821R1	0372193
549822R1	1472264
552747R2	☎
553079R1	0101222
553139R1	2001178
553406R1	0101151
553456R2	1901098
553456R2A	1901098
555048R1	2904308
559064R1	0202285
560689R1	0402170
56235C1	1472264
563782R1	1401253
564494R2	0302219
564728R1	1402336
565565R1	0301324
57842C1	0372199
581832R1A	2301174
581832R1B	2301174
582450R1	0301243
586452C1	0742142
586542C1	0742142
588894R1	1901115
589622R1	1401412
589623R1	1501398
59003C1	0172219
59004C1	0172211
591878R1	0202268
592030R1	0200073
592035R1	0210131
592038R2A	1401180
592038R2B	1401180
595348R11	0702199
596222R1	1402270
596361C1	0172192

CASE INTL. HARVESTER

OE	Gates
596595R1A	0402131
596595R1B	0402131
59701C1	0372280
59702C1	0372297
599060R1	1510140
599355R1	0202245
599428R1	0302205
599428R1A	0302205
599428R1B	0302205
59969C91	0372255
607666R1	1401161
607666R1A	1401161
607666R1B	1401161
607898R1	0302179
6100645M1	1472238
610380C1	0173218
610410R1B	0101172
610521C1	0301141
610521R1	0301141
610521R91	0301141
610531R1	1201291
610534R1	0101168
61083C1	0172195
61084C1	0122155
611932R2A	0402153
611932R2B	0402153
612046R1A	0101366
61284D	0372197
616004C1	0302224
617910C1	☎
617910R1	0301147
618829R1B	0301324
619117R1A	0301141
619117R1B	0301141
621770C1	0372242
627297R1	1401081
62817C1	0422134
632102R1	☎
632702R1	0502215
633728R2	0203328
65337C2	0172208
657185R1	0402153
657411R1	0201173
662901R1	0201112
665299R1	2001178
665398R1	0703213
665970R1	0703182
666390R1	0102216
667068R1	☎
668057R1	0703224
668287R2	2002167
668496R1	☎
668902R1	1201153
670144R1	☎
670278R1	0703198
670282R1	☎
670464C1	0201112
670572C1	0201096
670582C1	1401101
670741C1	1401110
671465R3	0200090
672177R1	0402155
672178R1	0102163
672974R2	0810190

OE	Gates
673026R3	1513209
673481C1	1401125
673685R1	0102189
673685R1B	0102189
673947C1	0172220
674620R1	0202182
674965R1	0702199
674965R2	0702199
676620R1	2501072
676622R1	0173208
676626R1	0173197
676645R1	0173219
676835R1	0372234
680600C1	1401125
680614R1	0172235
68386C1B	0173218
688192C91	0201152
700704407A	0101099
700704407B	0101099
700705773A	1901115
700705773B	1901115
700707578A	0200110
700707578B	0200110
700713435A	0200098
704449R1	0172195
709502R1	2601068
711118R1	1900095
712216R1	1900095
713480R1	0372234
714241R1	0372234
716404R1	0173225
716415R1	0173231
716417R1	0173234
717356R91	0173231
72-141383-8	0372223
72-153003-0	0224223 EE-TECH
726276R1	0201108
726278R1	1901094
726285R1	0201112
72896C1	1401208
73806C1	0173195
739734R1	2601068
739987R1	2501076
755638R1	0100057
756232R1	1472184
758866R1	0200093
76-109851-3	0324261 EE-TECH
764956R1	1900097
765434R1	1330221
767564R1	0711245
767585R91	1472292
767587R1	2301174
768220R91	1472292
768308R1	0422134
769482R1	0172208
769543R91	2501076
769830R2	0202245
7855687A	1401180
790522R1	1602150
793037R2	0105250
793040R1	0502215
793051R2	0785435
793094R1	0102129
793094R2	0102129

OE	Gates
793398R1	0302224
793398R2	0302224
793417R1	1402291
794464R2	0711204
794484R1	1902206
794489R2	0311196
80130C1	0372257
807852R1	0200134
823019C1	0702292
823091C1	1901283
823653C1	1924192
824202C1	1901283
824474C1	0323169
824880C1	0101291
824881C1	2602304
824881C1A	2602304
824881C1B	2602304
824961C1	0310153
825942C1	1401487
826730R1	0200073
826761C1A	0172208
826761C1B	0172208
829131C1	0324271 EE-TECH
829356C1	0101158
829506R1	0302224
829626C1	0172217
829627C1	0173240
829627C1A	0173240
829627C1B	0173240
829920C1	1472238
829921C1	0172225
829921C1A	0372223
829921C1B	0372223
830122C1	0173205
830123C1	0173213
832017C1	0102257
832044C2	2002298
84657C1	0372262
84766C1	0272210
84766X1	0272210
84811C1	0372197
857938A	0201090
897505H1	0272218
901375T1	0372223
90-1375T1	0372223
901502T1	1699317
902383T1	2484242
90-2383T1	2484242
903650T1	2388232
907190T1	1272212
907729T1	1472236
908383T1	0742158
90-8383T1	0742158
913637R	0373178
936331R1	0372245
937806R1	0101311
937928R1	0305315
937929R1	0102328
937932R1	☎
942053R	0273217
942231C1	2501072
953962C2	0710159
98-024334	0223201
98-027803	1425183

CASE INTL. HARVESTER / CATERPILLAR

OE	Gates
98-029076	1123251
98-029103	1413201
98-031590	1424253
98-039691	0101105
98-039776	1426413
98-039778	1826316 EE-TECH
98-041779	1124364
98-043775	0724399
98-045743	0371357
98-045896	2671363
98-046372	0372244
989271C1	0302281
99.060738-3023	1824328 EE-TECH
A11441	0173194
A11444	0372232
A135265	1472227
A138001	0172253
A138760	0372231
A139265	0422134
A145325	0301118
A162484	0372262
A169970	0272210
A184652	0172211
A18537	0173211
A189040	0372223
A189285	0272215
A19920	2601106
A21457	0372232
A21461	0422134
A22608	0372234
A22763	0173192
A22764	0173189
A22765	0173199
A22766	0173195
A34359	0173244
A34820	0422134
A38824	0422134
A57123	1601103
A57130	0301118
A59762	0301118
A61048	0201112
A62962	0372275
A65716	0372272
A65717	0372272
A75577	0172219
A76745	0301118
A76758	0372223
A77082	0501121
A77938	0785286
A78022	0285309
A903050	0373225
A9628	0172220
B50	0201102
B506234	0702212
B506235	2602244
B506238	1101149
C1100	0211250
C144	2002283
D127502	0372240
D128065	0172214
D129916	0172219
D43913	2601106
D53495	0372242
D60572	0173200

OE	Gates
D73446	0172233
D80856	0173191
D80857	0173225
D84316	0172211
DF070542	2002237
EN366	1699317
F12258	0312241
F12280	2603285
F12604	0812233
F13212	0112247
F13803	2602457
F16447A	1401231
F19498	2002190
F19549	0702292
F21990	0112223
F23028	1423290
F23261A	1601103
F23261B	1601103
F7865	0102411
F9659	1402317
FH262600	0305315
G11233	0172220
G46083	0173190
G46238	1472227
H310409	0172216
H310409A	0172216
H339341	0201096
H429357	0173230
H938752	0173232
J131213	0242131
J135822	0288279
J87152	0301118
J903099	0785278
J911558	0285271
J911559	2385277
J911561	0785269
J911562	0785269
J911563	0785286
J911565	0385270
J911566	1885281
J911567	0785276
J911569	0785286
J911570	0785278
J911571	0285274
J911572	0785286
J911573	0785278
J911574	0785278
J911575	1585280
J911587	0785262
J911671	0785286
J925953	1585272
K306655	0172235
K307429	1272212
K308448	0422134
K311714	0373225
K68073	0373225
K903050	0173223
K912196	0173218
K913631	0173206
K938731	1437204
K949311	0173232
K952514	0173227
L10746	0173222
L11111	0372240

OE	Gates
L19082	0372240
L47236	0172219
L49006	0372244
L50593	0422134
L57802	0422134
L57804	0172230
L72739	0400081
M32813	0102107
MB041704	0173212
MD007528	0173208
MD027458	0173209
ND-9092	0137334
ND9674	0701268
Q938736	0272210
R12232	0172219
R17745	2602118
S202900	0173232
S208005	0372232
S27955	0273217
S431718	0172208
S80928	0372204
S82985	0372204
S86213	1472227
S938738	1573238
S94499	1472236
T38546	1401127
T39995	1272212
T911557	0785276
T911567	0785276
TE121011127	0122155
TE12101255A	0173227
TE12201205	1472236
TE1220134	0173232
V32889500	0372203
V33764400	0172206
V35445000	1272212
V35615000	0172211
V684101125	0373221
V685121765	0289299
V938741	0173232
CATERPILLAR	
1P3085	0422134
1P4334	0422134
2P4191	0172235
2P5619	0372272
2P6532	1472264
2P6818	0172225
2P6820	0172221
2P8624	2902164
2S2743	0372240
2S5218	0372245
2S9506	0122155
2S9778	0272247
3S3961	0372244
3S6272	1472236
3S9652	1472264
4B2544	0172217
4M6291	0272215
4N6013	1472238
5B7168	0272210
5H7371	2902164
5M8135	0172235
5M8137	0372231
5S1817	0372258

CATERPILLAR / CHALLENGER / CLAAS

OE	Gates
5S3244	0372262
5S5249	0372260
6N4548	0301141
6N6650	0301141
7B344	0202139
8M0959	0402153
8M8335	0372257
8M8336	0172253
9N1329	0172217
CHALLENGER	
1976291	1490281
1976292	0190278
197-6291	1490281
197-6292	0190278
CLAAS	
11035850	1485352
11085260	0372242
11085270	0372244
11147940	0285329
11147950	0285329
11147960	0285327
11148040	0785284
11205790	0285309
11205791	0785285
11205800	1485304
11236770	1487217
11408420	0372231
11430440	0372240
21507001	0386283
1374310400	0201108
6000130460	1601103
6000130463	1472238
6005000475	0372231
6005000493	0172230
6005000844	0173249
6005022912	0373251
6005026548	0172216
7700010200	0372232
7700018067	0372240
7700027207	1573242
7700035746	0173245
7700.035.746	0173245
7700037114	0372257
7700.037.114	0372257
7700037116	0372260
7700.037.116	0372260
7700042689	0173231
7700043664	0285329
7700043752	0785285
7700.043.752	0785285
7700043753	0285318
7700.043.753	0285318
7700048822	0285329
7700.048.822	0285329
7700050644	0285264
7700.050.644	0285264
7700050889	0785355
7700.050.889	0785355
7700054412	0285343
7700055691	0785278
7700055692	0385306
7700057145	1485343
7700.057.145	1485343
7700059170	0285273

OE	Gates
7700.059.170	0285273
7700059172	0285310
7700.059.172	0285310
7700060521	2385277
7700.060.521	2385277
7700060527	0285357
7700.060.527	0285357
7700062253	0285274
7700.062.253	0285274
7700062256	0285309
7700.062.256	0285309
7700062257	2885308
7700.062.257	2885308
7700062268	0185275
7700.062.268	0185275
7700062485	0285263
7700.062.485	0285263
7700063621	0385359
7700.063.621	0385359
7700066453	0385331
7700.066.453	0385331
7700066699	0285310
7700.066.699	0285310
7700066721	0785278
7700.066.721	0785278
7700066723	0285306
7700.066.723	0285306
7700066725	1485304
7700.066.725	1485304
7700066727	0285357
7700.066.727	0285357
7700066735	1485352
7700.066.735	1485352
7700066737	0285329
7700.066.737	0285329
7700066739	1485353
7700.066.739	1485353
7700068065	0285343
7700.068.065	0285343
7700068151	1587240
7700.068.151	1587240
7700068536	0285280
7700.068.536	0285280
7700068539	2885308
7700.068.539	2885308
7700071570	0285339
7700074852	1485352
7700074853	0285316
7700074855	0285325
7701029701	0173223
7701029702	0373225
7701.029.702	0373225
7701029703	0173227
7701029705	0173232
7701029707	1573238
7701030341	0173223
7701031863	0372232
7701.031.863	0372232
006307.0	1519340
007278.0	0203292
010197.0	0330292
020344.0	0101285
020345.0	0323366
020600.0	1924209

OE	Gates
020601.0	1401231
020705.0	1401217
020712.0	1101149
022985.0	0201328
023218.0	0124204
023219.0	2602331
023220.1	2602213
027275.0	1413195
027280.0	1401127
027286.0	0301146
027581.0	0323507
030144.0	1403323
030350.0	1423144
051689.0	0101285
052393.0	1900113
052393.1	1400115
055292.0	2001129
055772.0	0201258
055880.0	0373251
055893.0	1900121
055965.0	2901237
056961.0	1900106
058394.0	1424187
060162.0	0301353
060239.0	/
060239.1	/
060304.1	1419521
060305.0	1419485
060306.0	1419300
060306.2	0702274
060306.3	0702274
060306.4	0702274
060916.0	1419548
060949.0	1419589
060949.1	1402556
060954.0	1402572
061024.0	1401518
061213.0	1402532
061214.0	1402609
061252.0	1402650
061253.0	1402646
061253.1	1402650
061253.2	1402650
061300.0	1402619
061306.2	1419300
061353.0	1402622
061353.1	1402622
061360.0	1402622
061360.1	1402621
061361.0	1402547
061700.0	1423319
061700.1	1423319
061701.0	1402355
061701.1	1402355
061701.2	1402358
061872.0	1402336
061872.1	1402336
061878.0	1402412
061902.0	1402479
062043.0	0102464
062294.0	0104232
063285.0	1426255
063309.0	0325358
063940.0	0302154

CLAAS

OE	
064168.0	1424251
064168.1	1424251
064168.2	1424251
064874.0	0302146
066034.0	1901188
067289.0	1442293
067290.0	1442228
067745.0	1426744
067746.0	1449787
067747.0	1499787
067747.1	1499787
067748.0	1499788
067789.0	1499333
068752.0	0101285
068752.1	0101285
068786.0	1401272
068786.1	1401272
069925.0	0101172
070052.0	0201102
070310.1	0101298
070952.0	1426410
070952.1	1426410
070952.2	1426410
070953.0	1425408
070953.1	1425408
072110.0	1470277
073199.0	0325362
073201.0	0325362
073201.1	0325362
073202.0	1425378 EE-TECH
073202.1	1425378 EE-TECH
073203.0	1424202
073203.1	1424202
073204.0	1470303
073204.1	1470303
073205.0	1426417
073970.0	☎
073971.0	☎
073972.0	☎
074771.0	1426423
074771.1	1426423
074771.2	1426423
074801.0	1499846
074803.0	1426413
074803.1	1426413
074803.2	1426413
076401.0	1499855
076401.1	1499855
076403.1	1470339
077276.0	1400290
077400.0	0101168
077401.0	0101169
077796.0	1449760
077796.1	1449760
077797.0	1426712
077797.1	1426712
080167.0	1499348
081648.0	1499348
083615.0	1499503
083668.0	1449407
083668.1	1449407
090255.0	1499349
090256.0	1499357
090256.1	1499413

OE	
090265.0	1426813
090266.0	1449856
090267.0	1474897
094045.0	2600070
094046.1	1901115
094046.2	1901115
094047.0	0172195
103037.0	2787313
103735.0	2787298
104098.1	0343303
104497.0	2037291
104914.0	0302134
104990.0	0202139
105580.0	1437204
105660.0	2837174
105860.0	2001190
105860.1	2001190
115085.0	0272218
124205.1	1474955
124205.3	1474955
124215.1	1449907
124225.0	1484982
124225.1	1484982
124225.2	1484982
124233.0	1474879
124233.1	1474879
124233.2	1474879
124235.0	1484959
124235.1	1484959
124235.2	1484959
124258.0	1401219
124291.0	1401212
1301294.1	0272215
1301642.0	0272210
1301643.0	0172206
130901.0	1499424
130906.0	1499429
130931.0	1401213
130945.1	1409119
130998.0	1426253
130999.0	1484870
131801.0	1401186
131801.1	1401186
131802.0	1401221
131802.1	1401221
131803.0	1499414
131816.0	1484996
131996.0	1449856
131997.0	1474897
131999.0	1484931
1324222.0	1424209
133523.0	0422134
133528.0	1472236
133549.0	1472238
133549.1	1472238
133589.0	0372231
133630.0	0372234
133630.1	0372234
133635.0	1472251
133635.1	1472251
133640.0	0372258
133641.0	1472264
133642.0	0122155
140755.0	1426253

OE	
140756.0	1484870
140765.0	1401254
142078.0	1499345
142232.0	1442253
142845.1	1499427
144298.0	/
144299.0	1499437
144356.0	1401178
144361.0	1499416
144550.0	1484909
144551.0	1484931
144898.0	1401214
145262.0	0201102
145265.0	0372231
145267.0	0172208
146084.0	1472227
146696.0	0372231
146890.0	1400072
147217.0	0172228
147218.1	0172225
147219.0	0173218
147220.0	0372232
147227.0	0372232
147228.1	1600100
147232.1	0372240
147233.1	0372244
165200.0	0173205
176432.0	1423404
176432.1	1423404
176432.2	1423404
176432.3	1423404
176438.0	1423290
176440.0	1423286
176440.1	1423286
176442.0	2124287
176442.1	2124287
176474.0	1426174
176474.1	1426174
176475.0	1415210
176542.0	2025173
176542.1	2025173
176543.0	1424163
176543.1	1424163
176544.0	1401101
176933.0	Chain
178681.0	1519193
178683.0	0112166
178684.0	1912236
178687.0	0325290 EE-TECH
178698.0	1901115
179205.0	0310128
179206.0	1472236
179207.0	1401129
179208.0	0372223
181501.0	0224306 EE-TECH
1991009.0	0285295
1998316.0	0285356
211148.0	2137177
211148.1	2137177
211238.0	☎
211240.0	1118081
211377.0	Chain
211437.0	Chain
211596.0	0173222

CLAAS

OE	Gates
211597.0	0173232
212759.0	1402373
213589.0	0300212
214243.0	1443193
214250.0	0372240
2158659.0	0285329
2158663.0	1485332
2227662.0	1401412
2310359.0	Chain
2310530.0	Chain
2310655.1	Chain
2311164.0	Chain
2314600.0	2600070
2314602.0	☎
2314628.0	1499419
23146280.0	1468360
233480.0	Chain
233510.0	0302146
233525.0	0337225
233630.0	Chain
233839.2	0201112
233843.0	1401129
233843.1	1401127
233943.0	0101158
233943.1	0101158
2403919.0	1486257
2405230.0	1499457
2405230.1	1499457
2405281.0	1484996
2405281.1	1484996
2405281.2	1484996
2405283.0	1449921
2405284.0	1474968
2599606.0	☎
260283.0	1425439
261545.0	1499350
261546.0	1426351
310939.0	1472238
320008.0	0272247
325728.0	1900123
327055.0	1900078
343110.0	1401208
344014.1	0202141
349065.0	0172225
349579.0	0217106
350340.0	0285301
350462.0	1423393
350463.0	1423348
350517.0	0202361
352371.0	1425292
352371.1	1425292
352403.0	1426293
353706.0	0285244
355658.0	1423364
355696.0	1423214
360007.0	0372199
361787.0	0372268
372010.0	0201335
376830.1	0301155
376846.0	2001143
376869.0	1413195
376894.0	1424269 EE-TECH
376968.0	0324284
391650.0	0325282

OE	Gates
393326.0	1423267
433639.0	1601120
481536.0	1401132
495008.0	1424209
495067.0	1823248
495067.1	1823248
495431.0	1423287
500273.1	1630327
500297.0	0730313
500863.0	1430287
500867.0	2330562
501771.0	1403222
501802.0	1401125
501802.1	1401125
501903.0	1401137
501925.0	0201215
503445.0	Chain
503459.0	1401304
503969.0	☎
505022.0	1437256
505112.0	0201177
505113.1	0101285
505143.0	1454386
505143.1	1454386
506023.0	1430480
506040.0	1530435
506050.0	0303409
506671.0	1454323
506671.1	1454323
506671.2	1454323
506792.0	1630347
506792.1	0330351
506880.0	1430283
506940.0	1430658
507020.0	1401271
507278.0	0203292
507317.0	1502315
507317.1	1502315
507508.0	/
507626.0	0302326
507723.0	0201090
507908.0	0201092
509010.0	0701422
509035.0	1501475
509035.1	1501475
509206.0	/
509435.0	0201343
512087.0	0172253
523252.0	1430352
528305.0	1437205
530142.0	0372240
532011.0	0101105
532011.1	0101105
538714.0	0301118
538714.1	0301117
539433.0	☎
539443.0	1499395
544048.0	1425161
544049.0	1425183
544049.1	0223179
544083.0	1425256
544096.0	1425187
544114.0	1424251
544114.1	1424251

OE	Gates
544115.0	1424251
544147.0	2002279
544164.0	1425257
544166.0	0223201
544172.0	1423656
544172.1	1423656
544216.0	1401241
544216.1	1401241
544365.0	1401241
545176.0	2601323
545176.1	2601323
545178.0	1824172
545186.1	1524427
545187.0	1424433
545188.0	1423289
545189.0	1423296
545216.0	☎
545306.0	2823255
545332.0	1486288
545394.0	1487257
545451.0	1423408
545452.0	1423404
545668.0	0200110
545668.1	0200110
545668.2	0200110
545689.0	0300225
545954.0	1485268
549011.0	1423174
549055.0	1402522
549055.1	1402522
549099.0	1425496
549151.0	1423478
549187.0	1402537
549187.1	1402537
549237.0	1924209
549238.0	1524550
549538.0	Chain
549752.0	1400071
549752.1	1400071
549752.2	1400071
551068.0	1430400
551190.0	1430746
552312.0	Chain
553467.1	Chain
554016.0	1402547
554017.0	1402474
554031.0	1423224
554032.0	1424494
554086.0	0323229
554093.0	1429336
554093.1	1429336
554098.1	1923257 EE-TECH
554099.0	1423723
554099.1	1423723
554121.0	0723443
554141.0	0324263
554141.1	0324263
554171.0	1423467
554172.0	1514172
554186.0	1423470
554201.0	☎
554269.0	0323282
554279.0	1423423
554339.0	1423404

CLAAS

OE	
554361.0	1425184
554361.1	2625185 EE-TECH
554365.0	2901237
554396.0	0301131
560562.0	1403248
560563.0	1403223
560690.0	1330221
560940.0	1430658
566108.0	1449471
567824.0	1424259
567824.1	1424259
567825.0	1424183
568234.0	0172201
569528.0	1925345 EE-TECH
570195.0	1423216
570195.1	2823218
570195.2	0323219
570407.0	1425429
570407.1	1425429
570827.0	1424475
570827.1	1424480
572150.0	0726208
573443.0	0202187
573725.0	1424375
573726.0	1524314 EE-TECH
577100.0	1425459
577101.0	1425623
577720.0	1423198
577720.1	1423198
577721.0	1449458
578331.0	1424200
578332.0	1124342
580157.0	0785276
580166.0	1472238
584627.0	0785285
584627.1	0785285
590195.0	1423216
596978.0	1442227
600981.0	Chain
600J22	0702272
602387.0	0122155
602387.1	0122155
603013.1	0301131
603015.0	1413166
603015.1	1413166
603017.0	1402436
603017.2	1402436
603017.3	1402436
603033.0	1423476
603048.0	1454282
603122.0	1403325
603131.0	Chain
603132.1	Chain
603209.0	1402317
603247.0	1424183
603247.1	1424183
603283.0	0302220
603284.0	2354342
603290.0	1402317
603317.0	1413201
603331.0	0302220
603336.0	1429345
603336.1	1429345
603337.0	0202222

OE	
603341.0	1601120
603348.0	☎
603354.0	1424250 EE-TECH
603378.0	0201097
603380.0	1410210
603380.1	1410210
603427.0	1423267
603430.0	1402412
603430.1	1402412
603762.0	0323472
605137.1	☎
605490.1	Chain
608716.0	Chain
608745.0	Chain
609726.0	0323472
609762.0	0323472
609763.0	1423210
609790.0	Chain
609822.0	1424273 EE-TECH
609823.0	1414208
610196.0	/
610197.0	0330292
610830.0	0501273
610830.1	0501273
610833.0	1401271
610833.1	1401271
610835.0	/
616362.1	1425215
617001.0	0203201
617309.0	1403254
617309.1	1403254
617309.2	1403254
618123.0	0101169
619278.0	Chain
621903.0	1443151
621903.1	1443151
622156.0	0201096
622156.1	0201096
623252.0	1430352
623425.0	2601323
623425.1	2601323
623427.0	1401378
623427.1	1401378
624131.0	1401081
628172.0	1423656
628175.0	0301183
628533.1	1402410
628579.0	1402550
628579.1	1402550
628630.0	1479291
628779.0	1402588
628779.1	1402588
628780.0	1402550
628782.0	1499431
628784.0	1423210
628785.0	2624322
628787.0	1425228
628788.0	1424331
628791.0	1424641
628792.0	0224234
628847.0	1413847
628847.1	1413847
628888.0	1423400
628964.0	1485350

OE	
628964.1	1485350
628978.0	1423361
628981.0	1401487
628991.0	1401499
629000.0	1425229 EE-TECH
629000.1	1425229 EE-TECH
629001.0	1425164
629001.1	1425165
629001.2	1425165
629002.0	1601103
629002.1	1601103
629035.0	1415208
629036.0	1454407
629081.0	0202305
629081.1	1402307
629110.0	1413110
629110.2	1413110
629133.0	1425168
629133.1	1425168
629142.0	1425218
629214.0	1477269
629214.1	1477269
629279.0	2025172
629366.0	1424215
629366.1	1424215
629402.0	0301373
629410.0	1402129
629410.1	1402129
629412.0	1413193
629436.0	1423274
629438.0	1423274
629441.0	0302390
629441.1	0302390
629445.0	1901098
629510.0	1424238 EE-TECH
629510.1	1424238 EE-TECH
629580.0	0315188
629580.1	1415188
629732.0	1401401
629732.1	1401401
629732.2	1401405
629737.0	1413193
629739.0	0701268
629739.1	0701268
629756.0	1413195
629758.0	1413193
629763.0	1423210
629764.0	1400072
629769.0	1423207
629769.1	1423207
629836.0	0302302
629836.1	0302302
629908.0	1443160
629908.1	1443160
630011.0	1903177
630025.0	/
630043.0	/
630043.1	/
630118.0	1903286
630144.0	1403323
630156.0	1478450
630169.0	1403308
631904.0	1478455
633030.0	0201108

CLAAS

OE	
633030.1	0201108
633030.2	0201108
634019.0	0301155
634019.1	0301155
634019.2	0301155
634046.0	1401137
635367.1	1437374
635427.0	1413320
635427.1	1413320
635494.0	1401304
635494.1	1401304
635587.0	1437374
636021.0	1430198
636021.1	1430202
638037.1	1454222
639226.0	0101151
639226.1	0101151
639226.2	0101151
639373.0	1430400
639417.0	0101168
640208.0	0319285
640653.0	1901251
640653.1	1901251
641419.0	0302428
642492.0	Chain
644014.0	1902144
644014.1	1902144
644015.0	1423179
644015.1	1423179
644016.0	1424181
644016.1	1424181
644017.0	1426173
644017.1	1426173
644018.0	1426230
644018.1	1426230
644141.0	1429343
644141.1	1429343
644177.0	1414168
644181.0	1900121
644209.0	0302251
644209.1	0102250
644209.2	0102250
644267.0	1401134
644362.0	1410148
644362.1	1410148
644363.0	1423333
644368.0	1402522
644368.1	1402522
644369.0	1402501
644369.1	1402501
644391.0	1402373
644399.0	1402508
644403.0	1426260
644404.0	1425254
644404.1	1425254
644405.1	1425191
644405.2	1425194
644418.0	1479291
644418.1	1479291
644419.0	0302424
644419.1	0302428
644447.0	1401412
644448.0	1200149
644448.1	1200149

OE	
644465.0	1924209
644509.0	1402270
644514.0	0172214
644537.0	1900151
644538.0	1623311 EE-TECH
644539.0	1602631
644685.0	1424218
644685.1	1424218
644771.0	0202305
644781.0	0200118
644843.0	1400115
644866.0	1323464
644884.0	1499431
644885.0	1424219
644889.0	1423319
644890.0	1423329
644891.0	1423196
644892.0	1424282
644893.0	1423240
644894.0	1323464
644895.0	1424313
644896.0	1424560
644897.0	1424296
644898.0	1423224
644899.0	0102250
644902.0	1423292
644928.0	1472292
644928.1	1472292
644942.0	1402293
644961.0	1424647
644965.0	2124287
644966.0	1424218
644969.0	1423211
645483.1	Chain
646011.0	Chain
646128.0	Chain
646660.0	Chain
648166.0	Chain
650039.0	0200086
650043.0	0200109
650046.0	0200130
650051.0	1400119
650083.0	0172237
650138.0	0202209
650174.0	Chain
650191.2	Chain
650193.0	Chain
650262.0	☎
650296.0	☎
651072.1	Chain
653059.0	0203300
653060.0	1424350
653062.0	0203313
653063.0	1403334
653064.0	2103333
653120.0	1430488
653121.0	/
653340.0	0137218
653380.0	/
653380.1	/
653450.0	0137218
653779.0	1630327
653933.0	1601120
654013.0	1419323

OE	
654534.0	0730341
654584.0	0730341
655408.0	1413315
656028.0	0201109
657793.0	1900089
659025.0	1400066
660314.0	0726296
660314.1	0726296
660315.0	0323219
660316.0	2023212
660382.0	1485353
660409.0	1423198
660409.1	1423198
660423.0	1410423
660488.0	1501193
660504.0	1425183
660554.0	1449340
660566.0	1401207
660568.0	1514172
660569.0	1425186
660587.0	1474387
660762.0	1423220
660762.1	1423220
660811.0	0300243
660815.1	1423250
660821.0	0724171
660833.0	☎
660851.0	1401329
660851.1	1401329
660854.0	0100312
660894.0	1402486
660961.0	1300104
660961.1	1300104
660962.0	1400114
661031.0	0223185
661031.1	0223185
661031.2	0223185
661031.3	0223185
661092.0	1426198
661092.1	1426196
661092.2	1426196
661093.0	1423202
661093.1	1423202
661114.0	1443167
661128.0	2002365
661220.0	1424259
661220.1	1424259
661239.0	1426236 EE-TECH
661239.1	1426236 EE-TECH
661244.0	1400119
661245.0	2600124
661298.0	1423274
661301.0	1402451
661301.1	1402451
661337.0	0102464
661337.1	0102464
661345.0	1400216
661361.0	0201173
661362.0	1425215
661362.1	1425215
661362.2	1425215
661365.1	1425187
661366.1	1825189
661378.0	1402486

CLAAS

OE	
661378.1	1402486
661378.2	1402486
661425.0	0201264
661427.0	1499369
661429.0	1499328
661430.0	1414168
661435.0	0302241
661451.0	1425229 EE-TECH
661458.0	1425228
661458.1	1425228
661469.0	0202268
661498.0	0702292
661541.0	0724325 EE-TECH
661909.0	Chain
661911.1	Chain
664016.1	1424181
664168.2	1424251
664448.0	1200149
665257.0	0168232
665258.0	0368245
665294.0	1401119
665798.0	1402606
665824.0	1425660
665824.1	1425660
665825.0	1424651
665825.1	1424651
665827.0	1424641
665827.1	1424641
665832.0	1467248
665833.0	1424215
665834.0	0153565
665865.0	1424659
665901.1	☎
665957.0	0714203
665957.1	0714203
665967.0	1424651
665999.0	1400181
665999.1	1400181
665999.2	1400181
666290.0	0301183
667219.0	0201109
667238.0	0202245
667242.0	1401113
667245.0	0301392
667246.0	1401304
667248.0	1453293
667248.0	1467248
667249.0	1423196
667250.0	1423210
667251.0	1423224
667251.1	1423224
667252.0	1423240
667253.0	0323453
667254.0	0724325 EE-TECH
667255.0	1424282
667255.1	1424282
667256.0	1423216
667367.0	0272247
667427.0	0124242 EE-TECH
667447.0	1401306
667452.0	1449337
667452.1	1449337
667453.0	1426293
667454.0	1402549

OE	
667454.1	1402549
667456.0	0372231
667457.0	1410203
667458.0	1424296
667477.0	0101311
667511.0	0101242
667530.0	1463300
667530.1	1463300
667551.0	1402587
667551.1	1402587
667551.2	1402587
667554.0	1424560
667560.0	1472264
667560.1	1472264
667561.0	1400234
667561.1	1400234
667633.0	☎
667651.0	0423458
667651.1	0423458
667673.0	1472227
667680.0	0225286 EE-TECH
667681.0	0223204
667682.0	1423211
667683.0	1402292
667683.1	1402291
667684.0	0202172
667781.0	0200118
667788.0	1468487
667798.0	1401194
667798.1	1401194
667798.2	0301198
667845.0	0202222
667846.0	0202168
667858.0	0323448
667881.0	1499431
667891.0	1469483
667891.1	1469483
667934.0	1423301 EE-TECH
667947.0	0323281
667957.0	1401208
667958.0	1423217
667958.1	1423216
667958.2	1423216
667958.3	1423216
667973.0	1401234
667974.0	1401384
667981.0	2023212
667981.1	2023212
667981.2	1423211
667983.0	1424313
667993.0	2602445
667993.1	2602445
668619.0	0385252
670221.1	1462186
670224.0	1462186
670224.1	1462186
670228.0	Chain
670229.2	Chain
670244.1	1462186
670723.0	1623401
670723.1	1623401
670724.0	1423362
670751.0	1224221
670768.0	0200104

OE	
670768.1	0200104
670796.0	1401310
670796.1	1401310
670823.0	1442214
670835.0	1400420
670842.0	1486256
670999.0	0700147
670999.1	0700147
670999.2	0700147
671012.0	1424227
671012.1	1424226 EE-TECH
671012.2	1424226 EE-TECH
671013.0	0202230
671013.1	0202230
671015.0	1415180
671083.0	1413193
671209.0	1459293
672250.1	1424166
672350.0	1424166
672350.1	1424166
672351.0	1423192
672353.0	0302390
672358.0	0302220
672359.0	1429345
672359.1	1429345
673601.0	2002211
673614.0	1423188
673614.1	1423188
673625.0	1424162
673638.0	1403239
673638.1	1403239
673639.0	1403310
673639.1	1403310
673690.0	0302134
673690.1	0102137
676277.0	Chain
677875.0	Chain
678046.0	0301211
680334.0	1424212
680334.1	1424212
685693.0	0372234
686200.0	Chain
687046.0	0301211
687046.1	0301211
689175.0	1401101
692149.0	1424269 EE-TECH
692150.0	1424276
692166.0	Chain
695610.0	1499313
695610.1	1499313
702509.0	1403228
702536.0	1613159
703314.0	0301183
706087.0	0401279
706087.1	0401279
706829.0	/
707001.1	1401442
712419.0	1413156
712419.1	1413156
712419.2	1413156
713506.0	0101200
713506.1	0101200
713506.2	0101200
716005.0	0173245

CLAAS

OE	
718093.0	☎
718717.0	1401209
720695.0	0202285
720696.0	1429283
720696.1	1429283
720866.0	1423274
721211.0	0172237
721295.0	1901115
721306.0	1482289
721307.0	1482291
722107.0	1482296
724043.0	0201124
724100.0	1424398 EE-TECH
724101.0	1423396 EE-TECH
724141.0	0102257
724168.0	1602195
724179.0	1401145
724180.0	1423389 EE-TECH
724181.0	1423389 EE-TECH
724193.0	1401147
724247.0	1402474
724247.1	1402474
724248.0	1402474
724248.1	1402474
724301.0	0202209
724301.1	0702212
724339.0	1402293
725325.0	Chain
727237.0	☎
728007.1	Chain
733308.0	/
733311.0	2002190
733361.0	1401450
740803.1	1426413
742023.0	0124204
742024.0	2002323
742025.0	0502215
742026.0	1601218
742026.1	1601218
742026.2	1601218
742027.0	0301183
742028.0	1101149
742030.0	2002228
742131.1	0101227
742143.0	0201328
742162.0	2601082
742182.0	1499335
742206.0	1401164
743910.1	0285317
744785.0	1401216
744833.0	0125244
744833.1	0325248
744870.0	1414210
744873.0	1442229
744874.0	0172189
744874.1	0172189
744913.0	1201291
744963.0	1401231
744965.0	1453965
744965.1	1453965
746505.0	0373264
746506.0	0101222
746507.0	1429203
746508.0	0201155

OE	
746508.1	0201155
746508.2	0201155
746508.3	0201155
746509.0	0101168
746549.0	0173257
746550.0	1472273
747508.0	0201152
749701.0	0300230
749712.0	1423329
749713.0	1423364
749714.0	1424331
749715.0	1424366
749813.0	0324284
749819.0	0272210
749824.0	1472292
749828.0	1423394
749859.0	1425275
749886.0	1424641
749886.1	1424641
749895.0	0224223 EE-TECH
749914.0	0702272
749951.0	1413216
750136.0	1429231
750193.0	0401111
750193.1	0401111
750193.2	0401111
750284.0	☎
750288.0	1401234
750288.1	1401234
750292.0	0101230
750293.0	1401081
750294.0	2001143
750296.0	0101085
750316.0	1429233
750382.0	0200098
750382.1	0200098
750382.2	0200098
750624.0	0101085
750888.0	1401234
751112.0	1499326
754315.1	Chain
755070.0	1601120
755070.1	1601120
755070.2	1601120
755508.0	Chain
755537.0	Chain
756051.0	0202168
756059.0	1430228
756446.0	1423286
756466.0	1423364
756466.1	1423364
756474.0	1410169
756508.0	1201153
758662.0	0301131
758662.1	2001129
758710.0	Chain
758711.0	Chain
758719.0	1401122
758853.0	1429240
758854.0	1429214
760869.0	0385270
760870.0	1472273
760870.1	1472273
761057.0	0101099

OE	
761057.1	0101099
761411.1	0372242
761412.0	0372240
761534.0	0372197
761979.0	0285317
761979.1	0285317
765176.0	1401314
765985.0	1900123
767057.0	0101099
767057.1	0101099
767113.0	0201108
768125.0	2383223
769005.0	2354241
769202.0	1454222
769202.1	1454222
770214.0	1430265
772657.0	0102184
772657.1	0102189
772658.0	1430746
772659.0	☎
772660.0	1430751
773015.0	0100303
773313.0	1429391
774099.0	1454371
774100.0	1454423
775049.0	1430480
775698.0	1401161
775869.0	1401161
778561.0	1459199
778561.1	1459199
778562.0	Chain
778564.0	Chain
778717.0	1401209
778717.1	1401209
779039.0	1613159
779212.0	☎
779213.0	1401405
779214.0	1429231
779272.0	1429244
780060.0	0285311
780160.0	0385306
780419.0	1430213
781038.0	2354293
781047.0	1330221
781394.0	0372255
781399.0	1601185
781400.0	0101164
783268.1	0372234
783430.0	1401129
783430.1	1401129
783476.0	0372318
783476.1	0372318
783876.0	1417218
785143.0	1401180
785168.2	1402129
785169.0	1902120
785172.0	1401175
785172.1	1401175
785173.0	1411336
785174.0	1468350
785174.1	1468350
785175.0	0402170
785176.0	1401314
785314.0	1501181

OE	Gates
785341.0	1401180
785868.0	☎
787607.1	☎
787631.0	Chain
790461.0	1411351
790502.0	2301262
791307.0	1469350
791717.0	0285306
791994.0	0285345
795266.0	☎
796450.0	0242166
796474.0	0385331
796475.0	0285329
796719.0	0372240
796786.0	1485332
796998.0	0285314
798498.0	0385306
798779.0	1442232
798820.0	☎
799181.0	1485304
800306.0	1454407
800309.0	2301174
800448.0	1430287
801221.0	1430231
801222.0	1401231
801491.0	0203206
801680.0	1401248
802530.0	1901188
802931.0	1401241
803309.0	2301174
805135.0	1819202
808761.0	1904187
818101.0	Chain
821249.0	0100083
821734.0	0300206
821734.1	0300206
821734.2	0300206
821813.0	0172217
825944.0	0200283
829094.0	1401137
837192.0	0300207
837195.0	0172217
837543.0	1400076
837546.0	1400264
838227.0	0200098
854132.0	1900097
895104.0	1403239
895105.0	0203187
901573.0	0372262
906561.0	1449281 EE-TECH
906736.0	1425303
906736.1	1425303
914149.0	1424202
916529.1	1501193
916532.1	1424350
917533.0	1223167
917623.0	0702151
920077.3	Chain
927323.0	2902164
927323.1	2902164
927654.0	0302179
928614.0	0101493
928630.0	1479291
929214.1	1402127

OE	Gates
930518.0	0902289
931289.0	0102161
931348.0	0702151
934301.0	2001146
934417.2	0302227
934418.0	1402243
934418.1	2002237
934418.2	1602240
934862.0	0301155
934862.2	0301155
936409.0	0301183
936718.0	0301147
936823.1	0301155
937031.0	2101138
937195.0	0172217
937605.0	2601082
937997.0	1401129
938171.0	1901196
938171.2	1901196
938931.0	1401209
939297.0	1319233
940490.0	0118122
942752.0	Chain
943227.0	2837174
943234.0	☎
947112.0	2601079
947916.0	2601082
947916.1	2601082
949396.0	1401103
949668.0	1401208
949670.0	2501076
949888.0	1401220
950133.0	1401216
950864.0	1401231
950890.0	1425156
951003.6	0173249
951457.0	1401122
951654.0	2601082
951654.1	2601082
951889.0	1401161
951917.0	1401209
952578.0	2301174
952937.0	1401161
952937.1	1401161
953002.8	1429248
954655.0	0201124
955001.6	Chain
958000.5	Chain
958004.2	Chain
977505.0	1437374
977505.1	1437374
977506.0	1437256
977506.1	1437256
977631.0	1401137
980850.0	1424181
980851.0	1424227
980852.0	2624191
980852.1	2624191
980853.0	0202230
981044.0	☎
981678.0	/
984855.0	☎
984885.0	1424202
984885.1	1424202

OE	Gates
985517.0	1424187
986390.0	1425191
986700.1	1424253
987883.0	1425204
A000922	0202230
A000946	1419548
AN1068	0226328 EE-TECH
AN1462	0224306 EE-TECH
AN1462.0	0224306 EE-TECH
AN443	0324545
AN655	0302345
AN916	2624278
E100120	0323426
E100690	1419593
E101970	1424162
F492198.0	1499396
K052392.01	1400115
NF001081	1118081
NF006116	0202172
NF006119	0101430
NF2006115	1454282
NF2006120	1902351
T264	1423144
WA001507	1454222
X334510.0	0102174
X372010.0	0201335
COCKSHUTT	
Z527	2502096
Z555	0172225
Z577	0173235
Z671	0173240
Z880	1472236
Z881	0372232
Z882	0372240
Z883	0372231
Z928	1472238
DEUTZ-FAHR	
33138	0501121
33566	0173230
33567	1472238
65402	0102161
0065402	0102161
67529	2902164
79582	0301080
82879	1472236
86979	2902164
178398	1473203
203073	1401081
204481	0372255
207003	1601066
209656	2501072
215885	2601066
226935	1472227
227398	0272247
227470	1472227
229211	0372223
229559	0372223
233432	0173210
233489	0172216
233490	0172216
235353	0372223
235394	0172208
237048	0372223
237386	0172217

DEUTZ-FAHR

OE	Gates
240595	0372245
243021	1472236
245120	0372262
246618	0372204
248316	0172225
252145	0172235
254350	0372242
254351	0372242
255200	0372232
256417	0372272
256655	1472236
256935	1472227
259363	0172221
259401	1401101
259566	0902122
260149	0372280
260328	0372240
261802	0372240
263408	1472238
268485	1472236
269183	0301118
272411	0172220
273193	1401129
273419	0102123
273705	0372232
562203	0172219
602944	0201112
621852	0301360
673606	2902164
709670	0372245
800116	1401081
1100903	1501193
1111612	0172225
1116060	1400066
1116062	0200073
1116063	1900078
1116066	1400087
1116067	1900097
1116078	1401081
1116080	0101085
1116081	2001086
1116087	0101099
1116089	0101105
1116091	1401113
1116092	0301117
1116093	1901133
1116095	2301174
1116096	0301183
1116131	0102180
1116142	1430231
1125975	1912195
1129778	1901115
1129779	1901115
1129970	1519452
1130742	0301155
1132421	2137163
1136724	1454407
1136729	2619370
1136731	0703249
1136734	0172225
1136737	0399322
1136747	2619370
1137509	0201124
1139067	1401204

OE	Gates
1139070	1454282
1139079	0102176
1139080	1202193
1139081	1602195
1139082	0202261
1139083	0902289
1139084	1402307
1139085	0302345
1139086	0202361
1139087	0302425
1139089	1430287
1139090	1530435
1139091	0203201
1139204	0172195
1139206	1482296
1139208	1118081
1139209	2619314
1139213	0173207
1139214	0173210
1139216	0273217
1139217	0173218
1139218	0373225
1139219	0273228
1139220	0173232
1139221	0173234
1139222	1573238
1139222	☎
1139223	0173212
1139225	0172206
1139229	0372223
1139230	0172225
1139231	0422134
1139232	0372234
1139233	0372234
1139235	0372286
1139237	1472292
1139241	1537326
1139242	1537344
1139247	1529198
1139248	1429214
1139249	1429233
1139252	0902122
1139253	0402159
1139257	☎
1139258	2619416
1139259	2619416
1139260	1519526
1139300	0372242
1139301	1402336
1141001	1699317
1141004	1417242
1141289	0372255
1141342	1917235
1141373	2902231
1141500	Chain
1141503	0323431
1141510	1425378 EE-TECH
1141530	1501527
1141554	2502099
1141555	2137177
1141556	2787276
1141591	0324377
1141595	0202285
1141608	1923287 EE-TECH

OE	Gates
1141612	1402363
1141613	1527171
1141615	1527332
1141622	0202222
1141623	2619368
1141624	1323464
1141625	2623538
1141637	1511156
1141643	2602287
1141644	0302393
1141645	1523480
1141666	1402363
1141749	1523568
1141758	0202245
1141759	1424238 EE-TECH
1141765	0401279
1141770	0302205
1141788	1101149
1141789	1501475
1141792	1924195
1141798	0202361
1141816	1423274
1141819	1123301
1141820	1559229
1141823	2602331
1141840	2301262
1141850	1401336
1141882	0102216
1141894	1602254
1141904	1512154
1141909	1524401 EE-TECH
1141912	1424227
1141917	1402217
1141918	1523306 EE-TECH
1141919	1524401 EE-TECH
1141938	0102184
1141941	1524289
1141944	1514231
1141958	0202235
1141971	1514192
1142150	0202235
1142906	1917250
1142913	0372262
1142948	0372245
1143410	1501135
1143412	0102328
1143413	1501163
1143497	0201335
1145003	0101245
1145025	0327375
1145026	0215198
1145026	1915192
1145049	1401204
1145050	1524427
1145051	0101225
1145052	2901252
1145053	1401499
1145054	0301447
1145055	1402412
1145056	1525431
1145057	0326432
1145072	Chain
1145087	Chain
1145093	Chain

DEUTZ-FAHR

OE	Gates
1145097	1510140
1145102	1527454
1145143	0202222
1145186	1402317
1145187	0223572
1145188	2623489
1145202	1560245
1145203	0302219
1145211	0302326
1145214	1401194
1145215	0301211
1145216	1401260
1145218	0101366
1145219	1514231
1145224	1510184
1145226	0423318 EE-TECH
1145260	0323244
1145261	1224221
1145262	0723221 EE-TECH
1145263	0301373
1145318	0217116
1145329	2124287
1145330	0323285
1145331	1560245
1145332	1560234
1145335	1402469
1145348	1527368
1145369	1560239
1145374	0215198
1145449	0702199
1145457	1424202
1145461	1602240
1145465	1562235
1145475	0302240
1145479	0227294
1145481	0302336
1145504	2002237
1145505	0302227
1145625	2001146
1145626	1512165
1145628	0749465 EE-TECH
1145629	0201161
1145630	0324303
1145631	1401180
1145633	2602381
1145640	0223556
1145660	0125322
1145667	1923257 EE-TECH
1145669	0202141
1145690	1524550
1145699	0202141
1145724	1560245
1145725	0101172
1145738	1402293
1145742	1549263
1145744	0749465 EE-TECH
1145766	1515202
1145789	2001162
1145790	2001129
1145792	0102328
1145800	Chain
1145814	Chain
1145823	☎
1145865	1524312 EE-TECH

OE	Gates
1145866	1424560
1145877	1527206
1145883	Chain
1145884	1602240
1145921	☎
1145940	1201150
1145949	0202332
1145959	2001143
1145960	1401122
1145961	1424215
1145970	/
1145973	1501189
1145977	0201155
1145980	1523230
1145989	0101222
1145991	0372307
1146013	1901188
1146025	0327375
1146027	☎
1146032	1523593
1146033	2623599
1146076	0324385
1147546	0323225 EE-TECH
1147547	1423188
1148492	0285293
1148512	0285294
1148874	0285301
1149241	☎
1151369	0122155
1151370	1472264
1154303	0173231
1154304	0172230
1154306	0372240
1154308	0372245
1154309	0272247
1154311	0372255
1154333	0173247
1154334	0173249
1154350	0173227
1154352	0172214
1154353	0172216
1154354	0172219
1154355	0172221
1154356	0372223
1154357	0172225
1154359	0372245
1156958	1573238
1159352	1423301 EE-TECH
1160306	0373262
1161595	0323238
1161612	1473236
1161683	0272218
1161685	0272218
1161687	0172219
1161693	0172221
1161697	1472227
1161703	0372232
1161709	0372234
1161746	1472227
1161773	1472236
1161860	0173231
1161989	0172206
1161991	1272212
1162091	0173223

OE	Gates
1162443	0173212
1162954	0173245
1163087	0173249
1163224	0172221
1163437	0173205
1163607	0173219
1163690	0173210
1164275	0372223
1164350	2012282
1164641	0422134
1168304	0273217
1168314	0172216
1168316	0272218
1168320	0372223
1168322	0422134
1168325	0372232
1168334	0372242
1169885	0373201
1169888	0172201
1170490	1912195
1171084	1472264
1171284	0372242
1171286	0172253
1172391	0172225
1172514	0312241
1173892	0173225
1174284	1472236
1174612	0173212
1174745	0372234
1174748	1472236
1174749	0372240
1174971	1511156
1175555	1472227
1175933	1272212
1175968	0422134
1175969	0372231
1175970	1900097
1175974	1472236
1176089	0173216
1176178	0173231
1176324	0173219
1176330	1472238
1177190	0272215
1177537	1424273 EE-TECH
1178046	0373264
1178736	0272218
1178737	0172216
1178738	1472227
1178739	0372234
1178909	0272215
1178968	0172214
1179088	0272215
1179126	0173223
1179128	0373221
1179132	0902122
1179474	0173208
1179479	0172216
1179564	0173224
1179565	0373221
1179566	0173223
1179675	1573242
1179722	0173244
1179747	0173232
1179777	0173210

DEUTZ-FAHR

OE	
1179780	0173253
1179852	0173234
1179891	0272218
1180140	0173210
1180150	0172225
1180172	0172221
1180173	0173227
1180195	0173216
1180316	0173257
1180350	0372231
1180447	1599288
1180449	0173245
1180462	0373179
1180468	0172214
1180516	1472251
1180517	0122155
1180552	1472227
1180619	0172219
1180663	0172208
1180709	1473203
1180828	0172233
1180831	0173231
1180833	0173225
1180846	0373225
1180847	0172206
1180848	0272210
1180849	0172214
1180850	0272218
1180901	0373201
1181076	0172221
1181185	0372223
1181366	0373225
1181587	1472227
1181675	0173189
1181775	1272212
1181897	0173257
1182045	0173208
1182051	0173210
1182055	0172221
1182063	0172219
1182184	0173227
1182312	0386283
1182360	0386283
1182367	0386283
1182432	0285271
1182599	0285294
1182728	0386283
1182729	0386283
1182830	0386283
1182831	0386283
1182832	0386283
1183141	0785267
1183144	0386283
1183145	0386283
1183146	0386283
1183147	0386283
1183148	0386283
1183149	0386283
1183205	0172216
1183362	0285295
1183367	0285301
1183371	1585272
1183377	0386289
1183403	1472227

OE	
1183559	1486288
1197878	0272247
1197999	0324261 EE-TECH
1231688	0302393
1300996	0312277
1302482	0172225
1306291	1400216
1307200	1425459
1309214	1423301 EE-TECH
1309571	1900123
1310381	1125260
1310382	1423290
1312339	0300206
1316268	0212312
1318378	0112200
1325150	0101245
1336307	0272247
1345785	0200125
1346200	1900123
1397518	1917261
1397560	0372255
1397731	2137163
1397776	1301116
1397951	0118122
1774650	1527368
001793500	0372234
1831110	0283326
001890440	0323519
2073746	0172192
2074320	0372231
2091544	0173223
2091561	0173223
2097654	1272212
2100737	0173210
2232958	0173240
2232960	1573238
2234343	0173240
2235175	0173234
2235176	1573242
2235177	1573242
2235179	0173223
2235180	0173223
2235181	0373225
2235253	0273217
2235254	1573238
2235255	0173245
2235257	0173223
2235259	0173225
2235260	0173234
2235261	0173245
2235262	0173249
2235264	0173253
2235265	0173257
2235421	0173257
2235533	1573238
2235713	0173208
2237477	0173210
2419104	0172208
2420196	0272218
3170529	0102257
4105548	1557391
4105556	1557485
4105564	1599476
4106516	1472292

OE	
4115412	1599476
4118748	0273215
4147300	0372242
4147646	0172214
4154401	0173253
4154836	1573242
4156387	0173245
4156783	0173240
4157477	0173257
4305745	1272212
4335452	1402127
4337725	0201102
4337757	0102108
4338212	1601103
4342249	0372244
4343181	0372232
4348910	2602118
4349729	0701095
4349777	2502096
4349778	2602103
4359336	0372240
4386813	0201097
4395701	0173227
4396941	0173225
4437549	0285299
4437559	0173253
4438414	2600124
4452440	0401111
4452801	0272210
4454180	1542184
4455177	0372223
6015922	2023246
6015923	1125260
6024474	0124309
6154952	0902157
6154998	2623506
6155819	0502215
6204291	0502215
6204313	1613159
6204322	0730313
6204331	1437204
6210851	0202235
6210853	0301363
6210869	0200124
6210881	0101088
6210889	1401125
6210890	2001129
6210906	1601205
6210907	1401208
6210915	1401234
6210917	1401241
6210918	1402363
6210919	1401248
6210921	2301262
6210922	1401271
6210923	0501273
6210924	0101285
6210927	1401314
6210934	☎
6210935	☎
6210950	2354342
6210952	1454371
6210970	2602118
6210971	0302134

OE	
6210972	0702151
6210973	0902157
6210975	0102174
6210976	0102176
6210977	0102163
6210978	1102171
6210981	0102180
6210984	1202193
6210986	1402293
6210988	0202209
6210989	2002211
6210990	0202209
6210991	0302220
6210992	0702225
6210993	0302227
6210994	0202230
6210995	2002228
6210996	2002237
6210997	0302251
6210999	0202275
6211001	2602304
6211003	1502315
6211004	0302326
6211006	1402336
6211010	0102415
6211014	1530164
6211016	☎
6211019	1430231
6211020	1530311
6211023	0730343
6211024	2330335
6211026	0130272
6211027	1430283
6211031	1503267
6211032	0730343
6211034	1530380
6211035	☎
6211038	☎
6211046	1903244
6211053	1530253
6212833	2117268
6212834	0137218
6212835	0337311
6212845	0273217
6212847	0373225
6212850	0173232
6212851	0173232
6212852	1573238
6212862	1272212
6212866	0372223
6212870	0372232
6212871	0372234
6212872	0372234
6212874	0200105
6212878	0372262
6212881	0372275
6212882	0372279
6212886	0372284
6212890	2317192
6212899	1118081
6212900	2637200
6212902	1437204
6212915	1529205
6212918	2954305

OE	
6212919	1529276
6212924	1519193
6212925	1519244
6212927	2319270
6212933	1519340
6213198	Chain
6213305	Chain
6215193	1559258
6215195	1560302
6215196	☎
6215197	1560225
6215199	1560238
6215202	1510174
6215203	0203236
6215204	2610252
6215205	0203245
6215206	1503286
6215207	1511156
6215209	1512193
6215211	1413156
6215212	2013171
6215213	1513221
6215214	1513212
6215215	1813232
6215216	1513240
6215217	1562224
6215220	1514182
6215221	1514192
6215222	0714187
6215222	1514187
6215223	0714187
6215223	1514187
6215226	0713182
6215231	1423290
6215233	1923287 EE-TECH
6215234	0323430
6215235	0323440 EE-TECH
6215236	1423389 EE-TECH
6215237	0224390 EE-TECH
6215238	0323270 EE-TECH
6215239	0323225 EE-TECH
6215240	1423198
6215241	1523417 EE-TECH
6215242	0223404 EE-TECH
6215243	1523417 EE-TECH
6215244	1527432
6215245	1527283
6215248	0324377
6215249	1524289
6215250	0224232 EE-TECH
6215251	0124309
6215252	2624191
6215253	0224247 EE-TECH
6215254	1424202
6215255	1524314 EE-TECH
6215257	0724325 EE-TECH
6215258	1524411 EE-TECH
6215259	1525391 EE-TECH
6215261	1425249
6215262	1525413 EE-TECH
6215263	1904187
6215268	1524289
6228207	1917250
6234476	0439222

OE	
6236157	0539244
6236657	1511156
6240268	1505295
6240407	0102161
6241130	0812275
6241147	1254331
6241305	0312280
6241910	1419300
6255583	1602382
6256381	1401194
6256546	1901188
6256547	0101200
6256619	1601218
6256714	0301155
6257897	1502504
6257898	0302240
6273236	0202285
6273237	1502392
6273876	1411159
6285949	1524419
6301463	1419300
6311053	1530253
6441770	1414168
6528420	1581456
6580024	2117239
6580049	1917246
6580119	1417242
9461898	0714187
9461898	1514187
12500121	0372255
16015922	2023246
16031403	1599476
16031538	0323229
16061769	1401499
16062265	1524429
16062730	1527180
16062735	1926435 EE-TECH
16062737	1527180
16062738	0727299
16062763	0172221
16062841	0100303
16062842	1901188
16062883	1524432
16062884	0172221
16062885	1527175
16063211	1525433
16063413	Chain
16064323	1524434
16603367	2002283
24192050	☎
30012900	0212267
33700746	1402307
36200413	0302251
43303430	0301183
72160695	0173205
90011721	☎
90015597	0323519
241190920	0172217
241190990	0372242
241191340	0173194
241191930	0173231
241192040	1400177
241192080	0301117
241192090	1501135

DEUTZ-FAHR

OE	
241192130	0323519
241192410	0372242
303526658	1472227
303526682	0373201
303527484	0372204
303535835	0172208
11012020127	2117239
11015020138	1917246
11018020136	1417242
117029010800	0400108
117502518500	0400081
117509112400	0330292
117529511800	1300092
117530012900	0212267
603450211275	1900097
603450211425	0372242
603450501200	0273228
603451111550	0173253
870025101776	1472236
870025101790	1400087
870025101888	0502215
870025114612	0312291
870025116456	1118108
870025116905	2619370
870025117590	0202261
870025118732	0203273
880009461533	1511156
880009461779	1513209
880022150256	0302200
880022150302	0202235
880022150475	0301360
880022152071	0100057
880022152100	1900078
880022152103	0172216
880022152112	1400087
880022152118	1300092
880022152125	1900097
880022152162	0200124
880022153106	2001086
880022153108	0101087
880022153110	0101088
880022153118	0701095
880022153125	0101099
880022153140	1401113
880022153145	1901115
880022153150	0301117
880022153158	0201124
880022153165	2001129
880022153170	1901133
880022153190	0301147
880022153195	0201152
880022153200	0301155
880022153202	0101156
880022153212	0101164
880022153230	2001178
880022153231	0301183
880022153250	1501193
880022153266	1601205
880022153270	1401208
880022153275	0301211
880022153280	0201215
880022153283	1601218
880022153300	0101230
880022153305	1401234

OE	
880022153315	1401241
880022153318	0301243
880022153345	0201264
880022153355	1401271
880022153360	0501273
880022153363	0301276
880022153375	0101285
880022153385	1201291
880022153412	1401314
880022153553	0202261
880022154165	☎
880022154170	☎
880022154180	2354241
880022154315	2354342
880022154355	1454371
880022154425	1454423
880022154426	1454407
880022155118	2502099
880022155120	2502099
880022155121	2502099
880022155155	2602118
880022155159	0302134
880022155190	0702151
880022155198	0902157
880022155200	0402159
880022155201	0102174
880022155202	0102176
880022155206	0102163
880022155217	1102171
880022155227	0102180
880022155228	0102180
880022155245	1202193
880022155246	1202193
880022155256	1402293
880022155271	0202209
880022155273	0202209
880022155276	0502215
880022155280	1402217
880022155290	0702225
880022155292	0302227
880022155297	2002228
880022155305	2002237
880022155325	0302251
880022155370	0202285
880022155371	0902289
880022155394	0302302
880022155400	1402307
880022155425	0302326
880022155439	1402336
880022155444	0202332
880022155450	0302345
880022155513	1502392
880022155545	0102415
880022155600	0302425
880022156135	1530164
880022156195	☎
880022156200	1430213
880022156220	1430231
880022156222	1530311
880022156224	1430231
880022156254	1530253
880022156280	0130272
880022156295	1430283
880022156300	1430287

OE	
880022156343	1503267
880022156375	0730343
880022156425	1530380
880022156435	☎
880022156500	1530435
880022157242	☎
880022157250	0203201
880022157302	0703249
880022157307	1903244
880022158103	0101085
880022158150	0301117
880022158155	1401122
880022158175	1401137
880022158190	0301147
880022158254	1530253
880027154170	☎
880077530318	2117268
880077530322	0137218
880077530327	0337311
880077532080	0172195
880077532091	0173207
880077532096	0173210
880077532107	0273217
880077532109	0173218
880077532116	0373225
880077532126	0173232
880077532129	0173234
880077532134	☎
880077533087	0173212
880077533095	0172206
880077533101	0217106
880077533103	1272212
880077533123	0422134
880077533128	0372232
880077533131	0372234
880077533132	0372234
880077533134	1472236
880077533148	0372240
880077533170	0372262
880077533181	0399322
880077533182	0399322
880077533183	0399322
880077533186	0372275
880077533191	0372279
880077533193	0372279
880077533201	0372284
880077533212	2317192
880077533213	2317192
880077533243	0372318
880077534132	1537168
880077534135	1472236
880077534145	2137177
880077534150	2787276
880077534160	1118081
880077534161	1118081
880077534175	2637200
880077534180	1437204
880077534181	1437204
880077534233	1537243
880077534344	1537326
880077534369	1537344
880077535186	☎
880077535200	1529205
880077535233	1429233

DEUTZ-FAHR

OE	
880077535235	1429233
880077535265	1529254
880077535289	1529276
880077536157	0902122
880077536207	0402159
880077536212	1519193
880077536280	1519244
880077536300	2119259
880077536315	2319270
880077536325	0119278
880077536335	0319285
880077536350	☎
880077536355	1419300
880077536375	2619314
880077536400	2619333
880077536425	2619352
880077536435	☎
880077536450	2619370
880077536511	2619416
880077536513	2619416
880077536560	1519452
880077536580	1519452
880077536660	1519526
880078593101	1272212
880078596410	1519340
880078596435	☎
890009364692	0202141
890009461299	1560302
890009461303	☎
890009461327	1560225
890009461329	1560238
890009461503	1510174
890009461504	2010251
890009461505	2610252
890009461506	0110264
890009461510	1503286
890009461533	1511156
890009461534	1513221
890009461628	1512193
890009461649	1562224
890009461690	1413156
890009461779	1513212
890009461784	1513212
890009461785	1813232
890009461787	1513240
890009461806	1562224
890009461886	1514182
890009461888	1514192
890009461893	0714187
890009461893	1514187
890009461898	0714187
890009461898	1514187
890009461899	0714187
890009461899	1514187
890009463182	0372272
890009464676	0713182
890009464699	1513207
890009466040	0723228 EE-TECH
890009466041	1423290
890009466042	0323426
890009466043	1923287 EE-TECH
890009466044	1923287 EE-TECH
890009466045	0323430
890009466046	0323440 EE-TECH

OE	
890009466047	1923309 EE-TECH
890009466048	0323440 EE-TECH
890009466049	1423389 EE-TECH
890009466050	0224390 EE-TECH
890009466051	0323270 EE-TECH
890009466052	3023227
890009466053	2023199
890009466054	1523417 EE-TECH
890009466055	1623311 EE-TECH
890009466056	0223404 EE-TECH
890009466057	1523417 EE-TECH
890009466100	1527432
890009466101	1527283
890009466180	1425378 EE-TECH
890009466181	0224229 EE-TECH
890009466182	1424366
890009466183	0324377
890009466184	1524289
890009466185	0224232 EE-TECH
890009466186	0124309
890009466188	2624191
890009466189	1424250 EE-TECH
890009466190	1424202
890009466191	1524314 EE-TECH
890009466193	0724325 EE-TECH
890009466194	1524411 EE-TECH
890009466195	1524419
890009466321	1525391 EE-TECH
890009466323	2825223
890009466325	1425249
890009466326	1525413 EE-TECH
890009467200	1904187
1101502013810	1917250
1101901950000	1437242
1110612010700	0439222
1110703010500	0319285
1111030011900	1511156
1111612011900	1581456
1111612011901	0139374
1111612011902	0139374
1111614013400	1505295
1111617019300	1429283
1111627019300	1254331
1111630017300	0812275
1210710011600	1401194
1210712015910	0101187
1210712016000	0101200
1210713013900	1601218
1210714019800	0301155
1210737011100	1502504
1210737011900	0302240
0117 9564	0173224
0.007.0967.0	0372245
0.017.7465.0	1527368
0.017.9350.0	0372234
0.018.9044.0	0323519
0110 0903	1501193
0111 1612	0172225
0111 6063	1900078
0111 6066	1400087
0111 6067	1900097
0111 6078	1401081
0111 6080	☎
0111 6081	2001086

OE	
0111 6087	0101099
0111 6089	0101105
0111 6092	0301117
0111 6093	1901133
0111 6096	0301183
0111 6131	0102180
0111 6142	1430231
0112 9778	1901115
0112 9970	1519452
0113 0742	0301155
0113 2421	2137163
0113 6724	1454407
0113 6729	2619370
0113 6731	0703249
0113 6737	0399322
0113 6747	2619370
0113 7509	0201124
0113 9067	1401204
0113 9070	1454282
0113 9079	0102176
0113 9080	1202193
0113 9081	1602195
0113 9082	0202261
0113 9083	0902289
0113 9084	1402307
0113 9085	0302345
0113 9087	0302425
0113 9089	1430287
0113 9090	1530435
0113 9091	0203201
0113 9204	0172195
0113 9208	1118081
0113 9209	2619314
0113 9213	0173207
0113 9216	0273217
0113 9217	0173218
0113 9218	0373225
0113 9220	0173232
0113 9221	0173234
0113 9222	☎
0113 9223	0173212
0113 9225	0172206
0113 9229	0372223
0113 9231	0422134
0113 9232	0372234
0113 9233	0372234
0113 9237	1472292
0113 9241	1537326
0113 9242	1537344
0113 9247	1529198
0113 9248	1429214
0113 9249	1429233
0113 9253	0402159
0113 9257	☎
0113 9258	2619416
0113 9259	2619416
0113 9260	1519526
0113 9301	1402336
0114 1001	1699317
0114 1004	1417242
0114 1289	0372255
0114 1342	1917235
0114 1503	0323431
0114 1510	1425378 EE-TECH

DEUTZ-FAHR

OE	
0114 1530	1501527
0114 1554	2502099
0114 1555	2137177
0114 1556	2787276
0114 1591	0324377
0114 1595	0202285
0114 1608	1923287 EE-TECH
0114 1612	1402363
0114 1613	1527171
0114 1615	1527332
0114 1622	0202222
0114 1623	2619368
0114 1624	1323464
0114 1625	2623538
0114 1637	1511156
0114 1643	2602287
0114 1644	0302393
0114 1645	1523480
0114 1666	1402363
0114 1749	1523568
0114 1759	1424238 EE-TECH
0114 1770	0302205
0114 1788	1101149
0114 1789	1501475
0114 1792	1924195
0114 1798	0202361
0114 1816	1423274
0114 1819	1123301
0114 1820	1559229
0114 1823	2602331
0114 1840	2301262
0114 1850	1401336
0114 1882	0102216
0114 1904	1512154
0114 1909	1524401 EE-TECH
0114 1912	1424227
0114 1917	1402217
0114 1918	1523306 EE-TECH
0114 1919	1524401 EE-TECH
0114 1938	0102184
0114 1941	1524289
0114 1944	1514231
0114 1958	0202235
0114 1971	1514192
0114 2150	0202235
0114 2906	1917250
0114 2913	0372262
0114 2948	0372245
0114 3410	1501135
0114 3412	0102328
0114 3413	1501163
0114 3497	0201335
0114 5003	0101245
0114 5025	0327375
0114 5026	0215198
0114 5026	1915192
0114 5049	1401204
0114 5050	1524427
0114 5051	0101225
0114 5052	2901252
0114 5053	1401499
0114 5054	0301447
0114 5055	1402412
0114 5056	1525431

OE	
0114 5057	0326432
0114 5072	Chain
0114 5087	☎
0114 5093	☎
0114 5097	1510140
0114 5102	1527454
0114 5143	0202222
0114 5186	1402317
0114 5187	0223572
0114 5188	2623489
0114 5202	1560245
0114 5203	0302219
0114 5211	0302326
0114 5214	1401194
0114 5215	0301211
0114 5216	1401260
0114 5218	0101366
0114 5219	1514231
0114 5224	1510184
0114 5226	0423318 EE-TECH
0114 5260	1523244
0114 5261	1224221
0114 5262	0723221 EE-TECH
0114 5263	0301373
0114 5318	0217116
0114 5329	2124287
0114 5330	0323285
0114 5331	1560245
0114 5332	1560234
0114 5335	1402469
0114 5348	1527368
0114 5369	1560239
0114 5374	0215198
0114 5449	0702199
0114 5457	1424202
0114 5465	1562235
0114 5475	0302240
0114 5479	0227294
0114 5481	0302336
0114 5504	2002237
0114 5505	0302227
0114 5625	2001146
0114 5626	1512165
0114 5628	0749465 EE-TECH
0114 5630	0324303
0114 5631	1401180
0114 5633	2602381
0114 5640	0223556
0114 5660	0125322
0114 5667	1923257 EE-TECH
0114 5669	0202141
0114 5690	1524550
0114 5699	0202141
0114 5724	1560245
0114 5725	0101172
0114 5738	1402293
0114 5742	1549263
0114 5744	0749465 EE-TECH
0114 5766	1515202
0114 5789	2001162
0114 5790	2001129
0114 5792	0102328
0114 5823	☎
0114 5865	1524312 EE-TECH

OE	
0114 5866	1424560
0114 5877	1527206
0114 5884	1602240
0114 5921	☎
0114 5949	0202332
0114 5959	2001143
0114 5960	1401122
0114 5961	1424215
0114 5973	1501189
0114 5977	0201155
0114 5980	1523230
0114 5989	0101222
0114 6013	1901188
0114 6025	0327375
0114 6027	☎
0114 6033	2623599
0114 6076	0324385
0114 8492	0285293
0114 8512	0285294
0114 9241	☎
0115 1369	0122155
0115 1370	1472264
0115 4303	0173231
0115 4304	0172230
0115 4306	0372240
0115 4308	0372245
0115 4309	0272247
0115 4311	0372255
0115 4333	0173247
0115 4334	0173249
0115 4350	0173227
0115 4353	0172216
0115 4354	0172219
0115 4355	0172221
0115 4356	0372223
0115 6958	1573238
0116 0306	0373262
0116 1612	1473236
0116 1683	0272218
0116 1685	0272218
0116 1687	0172219
0116 1693	0172221
0116 1697	1472227
0116 1703	0372232
0116 1709	0372234
0116 1746	1472227
0116 1773	1472236
0116 1860	0173231
0116 1989	0172206
0116 1991	1272212
0116 2091	0173223
0116 2443	0173212
0116 2954	0173245
0116 3087	0173249
0116 3224	0172221
0116 3437	0173205
0116 3607	0173219
0116 3690	0173210
0116 4275	0372223
0116 4641	0422134
0116 8304	0273217
0116 8316	0272218
0116 8320	0372223
0116 8322	0422134

DEUTZ-FAHR

OE	Gates
0116 8334	0372242
0116 9888	0172201
0117 1084	1472264
0117 1284	0372242
0117 1286	0172253
0117 2391	0172225
0117 3892	0173225
0117 4284	1472236
0117 4612	0173212
0117 4745	0372234
0117 4748	1472236
0117 4749	0372240
0117 4971	1511156
0117 5555	1472227
0117 5933	1272212
0117 5968	0422134
0117 5969	0372231
0117 5970	1900097
0117 5974	1472236
0117 6089	0173216
0117 6178	0173231
0117 6324	0173219
0117 7190	0272215
0117 8046	0373264
0117 8736	0272218
0117 8737	0172216
0117 8738	1472227
0117 8739	0372234
0117 8909	0272215
0117 8968	0172214
0117 9088	0272215
0117 9126	0173223
0117 9128	0373221
0117 9132	0902122
0117 9474	0173208
0117 9479	0172216
0117 9565	0373221
0117 9566	0173223
0117 9675	1573242
0117 9722	0173244
0117 9747	0173232
0117 9777	0173210
0117 9780	0173253
0117 9852	0173234
0117 9891	0272218
0118 0140	0173210
0118 0173	0173227
0118 0195	0173216
0118 0316	0173257
0118 0350	0372231
0118 0447	1599288
0118 0449	0173245
0118 0468	0172214
0118 0516	1472251
0118 0517	0122155
0118 0552	1472227
0118 0663	0172208
0118 0709	1473203
0118 0828	0172233
0118 0831	0173231
0118 0833	0173225
0118 0846	0373225
0118 0847	0172206
0118 0848	0272210

OE	Gates
0118 0849	0172214
0118 0850	0272218
0118 0901	0373201
0118 1076	0172221
0118 1775	1272212
0118 2184	0173227
0118 2312	0386283
0118 2360	0386283
0118 2367	0386283
0118 2432	0285271
0118 2599	0285294
0118 2728	0386283
0118 2729	0386283
0118 2830	0386283
0118 2831	0386283
0118 2832	0386283
0118 3141	0785267
0118 3144	0386283
0118 3145	0386283
0118 3146	0386283
0118 3147	0386283
0118 3148	0386283
0118 3149	0386283
0118 3362	0285295
0118 3367	0285301
0118 3371	1585272
0118 3377	0386289
0118 3559	1486288
0123 1688	0302393
0139 7560	0372255
0139 7731	2137163
0139 7776	1301116
0139 7951	0118122
0177 4650	1527368
0207 3746	0172192
0207 4320	0372231
0209 1544	0173223
0209 1561	0173223
0209 7654	1272212
0210 0737	0173210
0223 2958	0173240
0223 2960	1573238
0223 4343	0173240
0223 5175	0173234
0223 5176	1573242
0223 5177	1573242
0223 5179	0173223
0223 5180	0173223
0223 5253	0273217
0223 5254	1573238
0223 5255	0173245
0223 5257	0173223
0223 5259	0173225
0223 5260	0173234
0223 5261	0173245
0223 5262	0173249
0223 5264	0173253
0223 5265	0173257
0223 5421	0173257
0223 5533	1573238
0223 5713	0173208
0223 7477	0173210
0241 9104	0172208
0242 0196	0272218

OE	Gates
0317 0529	0102257
0410 5548	1557391
0410 5556	1557485
0410 5564	1599476
0410 6516	1472292
0411 5412	1599476
0414 7646	0172214
0415 4401	0173253
0415 4836	1573242
0415 6387	0173245
0415 6783	0173240
0415 7477	0173257
0433 5452	1402127
0433 7725	0201102
0433 7757	0102108
0433 8212	1601103
0434 2249	0372244
0434 3181	0372232
0434 8910	2602118
0434 9729	0701095
0434 9777	2502096
0434 9778	2602103
0435 9336	0372240
0438 6813	0201097
0439 5701	0173227
0439 6941	0173225
0443 8414	2600124
0445 2440	0401111
0445 2801	0272210
0445 4180	1542184
0445 5177	0372223
0601 5922	2023246
0601 5923	1125260
0602 4474	0124309
0615 4952	0902157
0615 4998	2623506
0615 5819	0502215
062 1852	0301360
0620 4313	1613159
0621 0851	0202235
0621 0853	0301363
0621 0869	0200124
0621 0890	2001129
0621 0906	1601205
0621 0907	1401208
0621 0915	1401234
0621 0917	1401241
0621 0918	1402363
0621 0919	1401248
0621 0921	2301262
0621 0922	1401271
0621 0923	0501273
0621 0927	1401314
0621 0934	☎
0621 0935	☎
0621 0950	2354342
0621 0952	1454371
0621 0970	2602118
0621 0971	0302134
0621 0972	0702151
0621 0973	0902157
0621 0975	0102174
0621 0976	0102176
0621 0977	0102163

DEUTZ-FAHR

OE	Gates
0621 0978	1102171
0621 0981	0102180
0621 0984	1202193
0621 0986	1402293
0621 0988	0202209
0621 0989	2002211
0621 0990	0202209
0621 0991	0302220
0621 0992	0702225
0621 0993	0302227
0621 0994	0202230
0621 0995	2002228
0621 0996	2002237
0621 0997	0302251
0621 1001	2602304
0621 1003	1502315
0621 1004	0302326
0621 1006	1402336
0621 1010	0102415
0621 1014	1530164
0621 1016	☎
0621 1020	1530311
0621 1023	0730343
0621 1024	2330335
0621 1026	0130272
0621 1031	1503267
0621 1034	1530380
0621 1035	☎
0621 1038	☎
0621 1046	1903244
0621 1053	1530253
0621 2833	2117268
0621 2834	0137218
0621 2835	0337311
0621 2862	1272212
0621 2866	0372223
0621 2870	0372232
0621 2878	0372262
0621 2881	0372275
0621 2882	0372279
0621 2886	0372284
0621 2890	2317192
0621 2899	1118081
0621 2900	2637200
0621 2902	1437204
0621 2915	1529205
0621 2918	2954305
0621 2919	1529276
0621 2924	1519193
0621 2925	1519244
0621 2933	1519340
0621 5193	1559258
0621 5195	1560302
0621 5196	☎
0621 5197	1560225
0621 5199	1560238
0621 5202	1510174
0621 5203	0203236
0621 5204	2610252
0621 5205	0203245
0621 5206	1503286
0621 5207	1511156
0621 5209	1512193
0621 5211	1413156

OE	Gates
0621 5212	2013171
0621 5213	1513221
0621 5214	1513212
0621 5215	1813232
0621 5216	1513240
0621 5217	1562224
0621 5220	1514182
0621 5221	1514192
0621 5222	0714187
0621 5222	1514187
0621 5223	0714187
0621 5223	1514187
0621 5226	0713182
0621 5233	1923287 EE-TECH
0621 5234	0323430
0621 5235	1501398
0621 5236	1423389 EE-TECH
0621 5237	0224390 EE-TECH
0621 5238	0323270 EE-TECH
0621 5239	0323225 EE-TECH
0621 5240	1423198
0621 5241	1523417 EE-TECH
0621 5242	0223404 EE-TECH
0621 5243	1523417 EE-TECH
0621 5244	1527432
0621 5245	1527283
0621 5248	0324377
0621 5249	1524289
0621 5250	0224232 EE-TECH
0621 5251	0124309
0621 5252	2624191
0621 5253	0224247 EE-TECH
0621 5254	1424202
0621 5255	1524314 EE-TECH
0621 5257	0724325 EE-TECH
0621 5258	1524411 EE-TECH
0621 5259	1525391 EE-TECH
0621 5261	1425249
0621 5262	1525413 EE-TECH
0621 5263	1904187
0621 5268	1524289
0622 8207	1917250
0623 4476	0439222
0623 6157	0539244
0623 6657	1511156
0624 0268	1505295
0624 0407	0102161
0624 1130	0812275
0624 1147	1254331
0624 1305	0312280
0625 5583	1602382
0625 6381	1401194
0625 6546	1901188
0625 6619	1601218
0625 6714	0301155
0625 7897	1502504
0625 7898	0302240
0627 3236	0202285
0628 5949	1524419
0630 1463	1419300
0631 1053	1530253
0644 1770	1414168
0652 8420	1581456
0658 0024	2117239

OE	Gates
0658 0119	1417242
087-002510-1.776	1472236
087-002510-1.790	1400087
087-002510-1.888	0502215
087-002511-4.612	0312291
087-002511-6.456	1118108
087-002511-6.905	2619370
087-002511-7.590	0202261
087-002511-8.732	0203273
088-000946-1.533	1511156
088-000946-1.779	1513209
088-002215.3-363	0301276
088-002215-0.256	0302200
088-002215-0.302	0202235
088-002215-0.475	0301360
088-002215-2.071	0100057
088-002215-2.100	1900078
088-002215-2.103	0172216
088-002215-2.112	1400087
088-002215-2.118	1300092
088-002215-2.125	1900097
088-002215-2.162	0200124
088-002215-3.106	2001086
088-002215-3.108	0101087
088-002215-3.110	0101088
088-002215-3.118	0701095
088-002215-3.125	0101099
088-002215-3.140	1401113
088-002215-3.145	1901115
088-002215-3.150	0301117
088-002215-3.158	0201124
088-002215-3.165	2001129
088-002215-3.170	1901133
088-002215-3.190	0301147
088-002215-3.195	0201152
088-002215-3.200	0301155
088-002215-3.202	0101156
088-002215-3.212	0101164
088-002215-3.230	2001178
088-002215-3.231	0301183
088-002215-3.250	1501193
088-002215-3.266	1601205
088-002215-3.270	1401208
088-002215-3.275	0301211
088-002215-3.280	0201215
088-002215-3.283	1601218
088-002215-3.300	0101230
088-002215-3.305	1401234
088-002215-3.315	1401241
088-002215-3.318	0301243
088-002215-3.345	0201264
088-002215-3.355	1401271
088-002215-3.360	0501273
088-002215-3.375	0101285
088-002215-3.385	1201291
088-002215-3.412	1401314
088-002215-3.553	0202261
088-002215-4.165	☎
088-002215-4.170	☎
088-002215-4.180	2354241
088-002215-4.315	2354342
088-002215-4.355	1454371
088-002215-4.425	1454423
088-002215-4.426	1454407

DEUTZ-FAHR

OE	
088-002215-5.118	2502099
088-002215-5.120	2502099
088-002215-5.121	2502099
088-002215-5.155	2602118
088-002215-5.159	0302134
088-002215-5.190	0702151
088-002215-5.198	0902157
088-002215-5.200	0402159
088-002215-5.201	0102174
088-002215-5.202	0102176
088-002215-5.206	0102163
088-002215-5.217	1102171
088-002215-5.227	0102180
088-002215-5.228	0102180
088-002215-5.245	1202193
088-002215-5.246	1202193
088-002215-5.256	1402293
088-002215-5.271	0202209
088-002215-5.273	2002211
088-002215-5.273E	2002211
088-002215-5.276	0502215
088-002215-5.280	1402217
088-002215-5.290	0702225
088-002215-5.292	0302227
088-002215-5.297	2002228
088-002215-5.305	2002237
088-002215-5.325	0302251
088-002215-5.370	0202285
088-002215-5.371	0902289
088-002215-5.394	0302302
088-002215-5.400	1402307
088-002215-5.425	0302326
088-002215-5.439	1402336
088-002215-5.444	0202332
088-002215-5.450	0302345
088-002215-5.513	1502392
088-002215-5.545	0102415
088-002215-5.600	0302425
088-002215-6.135	1530164
088-002215-6.195	☎
088-002215-6.200	1430213
088-002215-6.220	1430231
088-002215-6.222	1530311
088-002215-6.224	1430231
088-002215-6.254	1530253
088-002215-6.280	0130272
088-002215-6.295	1430283
088-002215-6.300	1430287
088-002215-6.343	1503267
088-002215-6.375	0730343
088-002215-6.425	1530380
088-002215-6.435	☎
088-002215-6.500	1530435
088-002215-7.242	☎
088-002215-7.250	0203201
088-002215-7.302	0703249
088-002215-7.307	1903244
088-002215-8.103	0101085
088-002215-8.150	0301117
088-002215-8.155	1401122
088-002215-8.175	1401137
088-002215-8.190	0301147
088-002215-8.254	1530253
088-002715-4.170	☎

OE	
088-007753.6-350	☎
088-007753-0.318	2117268
088-007753-0.322	0137218
088-007753-0.327	0337311
088-007753-2.080	0172195
088-007753-2.091	0173207
088-007753-2.096	0173210
088-007753-2.107	0273217
088-007753-2.109	0173218
088-007753-2.116	0373225
088-007753-2.126	0173232
088-007753-2.129	0173234
088-007753-2.134	☎
088-007753-3.087	0173212
088-007753-3.095	0172206
088-007753-3.101	0217106
088-007753-3.103	1272212
088-007753-3.123	0422134
088-007753-3.128	0372232
088-007753-3.131	0372234
088-007753-3.132	0372234
088-007753-3.134	1472236
088-007753-3.148	0372240
088-007753-3.170	0372262
088-007753-3.181	0399322
088-007753-3.182	0399322
088-007753-3.183	0399322
088-007753-3.186	0372275
088-007753-3.191	0372279
088-007753-3.193	0372279
088-007753-3.201	0372284
088-007753-3.212	2317192
088-007753-3.213	2317192
088-007753-3.243	0372318
088-007753-3.337	0337341
088-007753-3.337E	0337341
088-007753-4.132	1537168
088-007753-4.135	1472236
088-007753-4.145	2137177
088-007753-4.150	2787276
088-007753-4.160	1118081
088-007753-4.161	1118081
088-007753-4.175	2637200
088-007753-4.180	1437204
088-007753-4.181	1437204
088-007753-4.233	1537243
088-007753-4.344	1537326
088-007753-4.369	1537344
088-007753-5.186	☎
088-007753-5.200	1529205
088-007753-5.233	1429233
088-007753-5.235	1429233
088-007753-5.265	1529254
088-007753-5.289	1529276
088-007753-6.157	0902122
088-007753-6.207	0402159
088-007753-6.212	1519193
088-007753-6.280	1519244
088-007753-6.300	2119259
088-007753-6.315	2319270
088-007753-6.325	0119278
088-007753-6.335	0319285
088-007753-6.350	☎
088-007753-6.355	1419300

OE	
088-007753-6.375	2619314
088-007753-6.400	2619333
088-007753-6.425	2619352
088-007753-6.435	☎
088-007753-6.450	2619370
088-007753-6.511	2619416
088-007753-6.513	2619416
088-007753-6.560	1519452
088-007753-6.580	1519452
088-007753-6.660	1519526
088-007859-3.101	1272212
088-007859-6.410	1519340
088-007859-6.435	☎
089-000936-4.692	0202141
089-000946-1.299	1560302
089-000946-1.303	☎
089-000946-1.327	1560225
089-000946-1.329	1560238
089-000946-1.503	1510174
089-000946-1.504	2010251
089-000946-1.505	2610252
089-000946-1.506	0110264
089-000946-1.510	1503286
089-000946-1.533	1511156
089-000946-1.534	1513221
089-000946-1.628	1512193
089-000946-1.690	1413156
089-000946-1.779	1513212
089-000946-1.784	1513212
089-000946-1.785	1813232
089-000946-1.787	1513240
089-000946-1.806	1562224
089-000946-1.836	☎
089-000946-1.886	1514182
089-000946-1.888	1514192
089-000946-1.893	1514187
089-000946-1.898	0714187
089-000946-1.898	1514187
089-000946-1.899	0714187
089-000946-1.899	1514187
089-000946-3.182	0372272
089-000946-4.676	0713182
089-000946-4.699	1513207
089-000946-6.040	0723228 EE-TECH
089-000946-6.041	1423290
089-000946-6.042	0323426
089-000946-6.043	1923287 EE-TECH
089-000946-6.044	1923287 EE-TECH
089-000946-6.045	0323430
089-000946-6.046	0323440 EE-TECH
089-000946-6.047	1923309 EE-TECH
089-000946-6.048	0323440 EE-TECH
089-000946-6.049	1423389 EE-TECH
089-000946-6.050	0224390 EE-TECH
089-000946-6.051	0323270 EE-TECH
089-000946-6.052	3023227
089-000946-6.053	2023199
089-000946-6.054	1523417 EE-TECH
089-000946-6.055	1623311 EE-TECH
089-000946-6.056	0223404 EE-TECH
089-000946-6.057	1523417 EE-TECH
089-000946-6.100	1527432
089-000946-6.101	1527283
089-000946-6.180	1425378 EE-TECH

DEUTZ-FAHR / DRONNINGBORG

OE	Gates
089-000946-6.181	0224229 EE-TECH
089-000946-6.182	1424366
089-000946-6.183	0324377
089-000946-6.184	1524289
089-000946-6.185	0224232 EE-TECH
089-000946-6.186	0124309
089-000946-6.188	2624191
089-000946-6.189	1424250 EE-TECH
089-000946-6.190	1424202
089-000946-6.191	1524314 EE-TECH
089-000946-6.193	0724325 EE-TECH
089-000946-6.194	1524411 EE-TECH
089-000946-6.195	1524419
089-000946-6.321	1525391 EE-TECH
089-000946-6.323	2825223
089-000946-6.325	1425249
089-000946-6.326	1525413 EE-TECH
089-000946-7.200	1904187
1-1012-020-127	2117239
1-1015-020-138	1917246
1-1015-020-138.10	1917250
1-1018-020-136	1417242
1-1019-019-500.00	1437242
1-1106-120-107.00	0439222
1-1107-030-105.00	0319285
1-1110-300-119.00	1511156
1-1112-120-100.00E	1419300
1111212010000E	1419300
1-1114-030-105.00E	0337404
1111403010500E	0337404
1-1116-120-119.00	1581456
1-1116-120-119.01	0139374
1-1116-120-119.02	0139374
1-1116-140-134.00	1505295
1-1116-170-193.00	1429283
1-1116-270-193.00	1254331
1-1116-300-173.00	0812275
1170.290.108.00	1900106
1175.025.185.00	0372223
1175.091.124.00	0330292
1175.295.118.00	1300092
1175.300.129.00	0212267
1-2107-100-116.00	1401194
1-2107-120-150.00E	1901188
1210712015000E	1901188
1-2107-120-160.00	0101200
1-2107-130-139.00	1601218
1-2107-140-198.00	0301155
1-2107-370-111.00	1502504
16031403HX	1599476
16062737/30	1523170
1660 3367	2002283
1-7950-070-100.00E	0137334
1795007010000E	0137334
2.4119.092.0	0172217
2.4119.099.0	0372242
2.4119.134.0	0173194
2.4119.193.0	0173231
2.4119.204.0	1400177
2.4119.208.0	0301117
2.4119.209.0	1501135
2.4119.213.0	0323519
2.4119.241.0	0372242
4437549HX	0285299

OE	Gates
ND9081	1118132
ND96006	2002283
DRONNINGBORG	
41336500	☎
41900979	0139209
41901500	1900245
41902600	1472184
41903000	0100057
41903700	0272247
41903800	0372232
41904200	0272215
41904400	0200085
41904600	1900089
41904700	1900095
41904900	1900097
41905200	0200098
41905300	1600100
41905600	1300104
41905800	0122155
41907500	0200124
41907600	0372223
41907800	1900132
41908300	1900136
41908400	0100141
41908600	0100145
41909000	1699317
41910400	1400153
41911000	1600168
41911400	1900174
41912200	1601066
41912300	0200204
41912400	0200204
41912600	1900211
41915000	1900245
41916800	0100357
41919000	0200130
41919900	0272247
41921500	2787257
41921700	0187274
41921801	2687277
41922200	0101066
41922900	1401081
41923000	☎
41923800	2001086
41924200	0101088
41924300	0201090
41924400	1901094
41924500	0201096
41924700	1401101
41924800	0201102
41924900	1601103
41925000	1601103
41925200	1401101
41925300	0101105
41925700	0201108
41926000	0301117
41926100	0401111
41926300	0301118
41926400	1601120
41926500	0201123
41926600	0201123
41926800	0201123
41927000	1401125
41927300	1401129

OE	Gates
41927600	2001129
41927700	2001129
41927800	2001129
41928000	1901133
41928100	2101138
41928400	1901133
41928700	1401137
41928800	2101138
41928900	0301141
41929000	2001143
41929100	1401145
41929200	2001146
41929400	1401144
41929500	1401144
41930100	0301147
41930200	1101149
41930300	0101151
41930400	0101151
41930500	0201152
41930600	0101151
41931200	0101158
41931600	1401161
41931800	0201161
41931900	☎
41932000	0101164
41932200	0101168
41932600	2301174
41932800	0201177
41932900	☎
41933000	0201177
41933200	1401180
41933300	0301183
41933400	0101184
41933500	1601185
41933600	1601185
41933700	0101187
41933800	2001190
41933900	0101184
41934000	0201161
41934200	1625207
41934300	1901196
41934600	1624201
41934700	1401199
41934800	0301198
41934900	0101200
41935000	0101200
41935200	1601205
41935300	1601205
41935400	1401208
41935500	1401209
41935700	0301211
41935900	1601218
41936200	1401220
41936300	1401209
41936400	0301211
41936500	0101222
41936700	1401216
41936800	1401220
41936900	0101227
41937300	1401231
41937500	2901237
41937600	1601218
41937700	1601218
41938000	0101245

DRONNINGBORG

OE	
41938700	0139211
41938900	0201264
41939300	0401279
41939800	0101287
41940700	0101291
41940900	1401306
41941100	0301324
41941500	0201335
41941900	2501256
41942000	1201291
41942100	1601349
41942200	1401378
41943000	0301360
41943200	0301360
41943600	0301392
41944200	1401405
41944700	1401499
41950000	1602195
41950100	0302197
41950200	2602244
41950300	0102257
41950400	2602194
41950600	1902206
41950900	0102174
41951000	1402291
41951100	0102107
41951700	2602125
41952000	0302136
41952200	0102148
41952400	0402155
41952900	0402159
41953100	0102161
41953300	1102171
41953400	0102173
41953600	0102176
41953700	2002167
41953900	0102180
41954100	0202209
41954200	0102184
41954300	0202222
41954800	2002237
41955400	0202275
41955800	0202310
41955900	2002253
41956000	☎
41956500	1402336
41957100	0102464
41957500	0202230
41957600	1402217
41957800	1602254
41957900	0102497
41958300	1302519
41958500	0202528
41958600	1402532
41958700	☎
41959100	0202576
41959200	1602631
41962000	2601079
41962100	1401081
41962600	0101088
41963400	0201108
41963700	0401111
41963800	0301131
41963900	1401122

OE	
41964000	1401122
41964100	1601120
41964200	0201123
41964300	1401122
41964400	1401129
41964500	1401125
41964600	1901133
41964700	1901136
41965100	0101156
41965200	☎
41965600	0101168
41965700	0101169
41965900	1401180
41966100	1601185
41966500	0101200
41966900	0201215
41967400	☎
41969000	☎
41969400	☎
41971000	0115190
41972100	0104232
41972200	0104237
41972300	0104237
41972800	0104248
41974300	0104282
41975300	2904308
41976200	0104332
41977500	0104381
41977900	0223543
41978000	0126299 EE-TECH
41978100	0723264 EE-TECH
41978200	0125287
41978400	0223526
41978500	0104430
41978600	0104430
41978800	0123398
41978900	0323544
41979000	2023280 EE-TECH
41979100	0123239
41979200	1524401 EE-TECH
41979300	0723264 EE-TECH
41979400	1626276 EE-TECH
41979500	1524411 EE-TECH
41979600	1623354
41979800	1625309 EE-TECH
41979900	0226330 EE-TECH
41980000	0111152
41980100	1613266
41980200	0810190
41980300	1611145
41980400	1613281
41980500	0715190
41980600	1611145
41980800	1613159
41980900	1613281
41981000	0215198
41981100	0810228
41981200	0810190
41981300	0102114
41981400	0110242
41981500	0715190
41981800	0102183
41981900	0102148
41982100	0402155

OE	
41982200	0402155
41982400	0402159
41982500	0402159
41982600	0302224
41982700	0102161
41983000	2002167
41983100	1102171
41983200	0102163
41983300	0102180
41983400	0102180
41983500	0102184
41983600	0102184
41983700	2602194
41983800	0702199
41983900	0702199
41984100	0102216
41984300	1430265
41984900	0202268
41985200	0102176
41985300	2002190
41985400	0102449
41985600	0202245
41985900	0702212
41986100	0202230
41986200	0202245
41986300	1402307
41986400	1654247
41986500	1602382
41986800	2002237
41986900	0902157
41987000	0202168
41987100	0102176
41987200	2602194
41987300	1602396
41987500	0102643
41987600	1402501
41987700	2602194
41987800	2002190
41987900	0702151
41988000	0302248
41988400	☎
41988500	0130272
41988600	1630274
41988700	1630274
41988900	0130272
41989000	1630327
41989100	1630347
41989200	0130326
41989400	1630330
41989700	1630347
41989800	1530311
41989900	0105410
41990000	0123224
41990001	0119198
41990006	0102231
41990007	1437204
41990008	0272247
41990009	0372271
41990011	0143239
41990012	0372204
41990013	0372240
41990014	0172221
41990019	0143222
41990025	0199450

DRONNINGBORG

OE	Gates
41990027	0372223
41990037	1630330
41990045	0125211
41990046	0325213
41990048	0223515
41990049	0123366
41990050	0123224
41990051	1524314 EE-TECH
41990052	1424253
41990053	0124309
41990054	0124204
41990055	0124208
41990056	0125209
41990057	0125211
41990058	1625207
41990059	0226330 EE-TECH
41990060	0126295 EE-TECH
41990061	0125209
41990062	0325213
41990063	0124208
41990064	0149339
41990066	0124242 EE-TECH
41990067	1424282
41990068	0105236
41990069	0105447
41990100	0105408
41990200	0105447
41990300	0105408
41990400	0105447
41990700	0372242
41990800	0372244
41991000	1472238
41991100	0372255
41991200	0372240
41991300	0324237
41991400	1523177
41991600	0724321 EE-TECH
41991700	1424250 EE-TECH
41992000	0323254 EE-TECH
41992100	1623297 EE-TECH
41992200	1623311 EE-TECH
41992300	2023246
41992400	1630354
41992700	1630327
41992800	1623311 EE-TECH
41993000	0110288
41993100	0203245
41993400	0324237
41993500	1824175
41993800	0325214
41993900	0110264
41994000	0203294
41994200	0725342
41994300	0114136
41994400	0123252
41994500	0125349
41994600	1424250 EE-TECH
41994900	0113250
41995000	0372257
41995100	1527171
41995200	1514182
41995400	☎
41995600	1624215
41995700	0110196

OE	Gates
41996100	0372286
41996200	1437204
41996300	0137367
41996400	0372260
41996500	1637240
41996600	0137352
41996700	1118081
41997000	0217116
41997100	1118090
41997200	0137218
41997300	0172220
41997400	1437256
41997500	0337304
41997600	0137334
41997700	1118108
41997800	1837245
41998000	0101164
41998700	0139211
41998800	0101164
41998900	0139225
41999100	1472236
41999200	0113286
41999600	0119407
41999700	0137516
41999800	0337404
42327400	☎
42332600	☎
45055100	0172228
46300102	0172208
46300855	0372232
46301057	0372232
49906300	1472236
49907600	0372223
49912500	1443193
49926000	1900113
49926400	0172230
41933900.00	0101184
41942000.00	1201291
41978100.01	0723264 EE-TECH
41978800R2	0123398
41983300R8	0102180
41990060.00	0126274
41990060.01	0126295 EE-TECH
D-41336500	☎
D-41900979	0139209
D-41901500	1900245
D-41902600	1472184
D-41903000	0100057
D-41904200	0272215
D-41904400	0200085
D-41904600	1900089
D-41904700	1900095
D-41904900	1900097
D-41905200	0200098
D-41905300	1600100
D-41905600	1300104
D-41905800	0122155
D-41907500	0200124
D-41907600	0372223
D-41907800	1900132
D-41908300	1900136
D-41908400	0100141
D-41908600	0100145
D-41909000	1699317

OE	Gates
D-41910400	1400153
D-41911000	1600168
D-41911400	1900174
D-41912200	1601066
D-41912300	0200204
D-41912400	0200204
D-41912600	1900211
D-41915000	1900245
D-41916800	0100357
D-41919000	0200130
D-41919900	0272247
D-41921500	2787257
D-41921700	0187274
D-41921801	2687277
D-41922200	0101066
D-41922900	1401081
D-41923000	☎
D-41923800	2001086
D-41924200	0101088
D-41924300	0201090
D-41924400	1901094
D-41924500	0201096
D-41924700	1401101
D-41924800	0201102
D-41924900	1601103
D-41925000	1601103
D-41925200	1401101
D-41925300	0101105
D-41925700	0201108
D-41926000	0301117
D-41926100	0401111
D-41926300	0301118
D-41926400	1601120
D-41926500	0201123
D-41926600	0201123
D-41926800	0201123
D-41927000	1401125
D-41927300	1401129
D-41927600	2001129
D-41927700	2001129
D-41927800	2001129
D-41928000	1901133
D-41928100	2101138
D-41928400	1901133
D-41928700	1401137
D-41928800	2101138
D-41928900	0301141
D-41929000	2001143
D-41929100	1401145
D-41929200	2001146
D-41929400	1401144
D-41929500	1401144
D-41930100	0301147
D-41930200	1101149
D-41930300	0101151
D-41930400	0101151
D-41930500	0201152
D-41930600	0101151
D-41931200	0101158
D-41931600	1401161
D-41931800	0201161
D-41931900	☎
D-41932000	0101164
D-41932200	0101168

DRONNINGBORG

OE	Gates
D-41932600	2301174
D-41932800	0201177
D-41932900	☎
D-41933000	0201177
D-41933200	1401180
D-41933300	0301183
D-41933400	0101184
D-41933500	1601185
D-41933600	1601185
D-41933700	0101187
D-41933800	2001190
D-41933900	0101184
D-41933900.00	0101184
D-41934000	0201161
D-41934200	1625207
D-41934300	1901196
D-41934600	1624201
D-41934700	1401199
D-41934800	0301198
D-41934900	0101200
D-41935000	0101200
D-41935200	1601205
D-41935300	1601205
D-41935400	1401208
D-41935500	1401209
D-41935700	0301211
D-41935900	1601218
D-41936200	1401220
D-41936300	1401209
D-41936400	0301211
D-41936500	0101222
D-41936700	1401216
D-41936800	1401220
D-41936900	0101227
D-41937300	1401231
D-41937500	2901237
D-41937600	1601218
D-41937700	1601218
D-41938000	0101245
D-41938700	0139211
D-41938900	0201264
D-41939300	0401279
D-41939800	0101287
D-41940700	0101291
D-41940900	1401306
D-41941100	0301324
D-41941500	0201335
D-41941900	2501256
D-41942000	1201291
D-41942000.00	1201291
D-41942100	1601349
D-41942200	1401378
D-41943000	0301360
D-41943200	0301360
D-41943600	0301392
D-41944200	1401405
D-41944700	1401499
D-41950000	1602195
D-41950100	0302197
D-41950200	2602244
D-41950300	0102257
D-41950400	2602194
D-41950600	1902206
D-41950900	0102174

OE	Gates
D-41951000	1402291
D-41951100	0102107
D-41951700	2602125
D-41952000	0302136
D-41952200	0102148
D-41952400	0402155
D-41952900	0402159
D-41953100	0102161
D-41953300	1102171
D-41953400	0102173
D-41953600	0102176
D-41953700	2002167
D-41953900	0102180
D-41954100	0202209
D-41954200	0102184
D-41954300	0202222
D-41954800	2002237
D-41955400	0202275
D-41955800	0202310
D-41955900	2002253
D-41956000	☎
D-41956500	1402336
D-41957100	0102464
D-41957500	0202230
D-41957600	1402217
D-41957800	1602254
D-41957900	0102497
D-41958300	1302519
D-41958500	0202528
D-41958600	1402532
D-41958700	☎
D-41959100	0202576
D-41959200	1602631
D-41962000	2601079
D-41962100	1401081
D-41962600	0101088
D-41963400	0201108
D-41963700	0401111
D-41963800	0301131
D-41963900	1401122
D-41964000	1401122
D-41964100	1601120
D-41964200	0201123
D-41964300	1401122
D-41964400	1401129
D-41964500	1401125
D-41964600	1901133
D-41964700	1901136
D-41965100	0101156
D-41965200	☎
D-41965600	0101168
D-41965700	0101169
D-41965900	1401180
D-41966100	1601185
D-41966500	0101200
D-41966900	0201215
D-41967400	☎
D-41969000	☎
D-41969400	☎
D-41971000	0115190
D-41972100	0104232
D-41972200	0104237
D-41972300	0104237
D-41972800	0104248

OE	Gates
D-41974300	0104282
D-41975300	2904308
D-41976200	0104332
D-41977500	0104381
D-41977900	0223543
D-41978000	0126299 EE-TECH
D-41978100	0723264 EE-TECH
D-41978100.01	0723264 EE-TECH
D-41978200	0125287
D-41978400	0223526
D-41978500	0104430
D-41978600	0104430
D-41978800	0123398
D-41978800R2	0123398
D-41978900	0323544
D-41979000	2023280 EE-TECH
D-41979100	0123239
D-41979200	1524401 EE-TECH
D-41979300	0723264 EE-TECH
D-41979400	1626276 EE-TECH
D-41979500	1524411 EE-TECH
D-41979600	1623354
D-41979800	1625309 EE-TECH
D-41979900	0226330 EE-TECH
D-41980000	0111152
D-41980100	1613266
D-41980200	0810190
D-41980300	1611145
D-41980400	1613281
D-41980500	0715190
D-41980600	1611145
D-41980800	1613159
D-41980900	1613281
D-41981000	0215198
D-41981100	0810228
D-41981200	0810190
D-41981300	0102114
D-41981400	0110242
D-41981500	0715190
D-41981900	0102148
D-41982100	0402155
D-41982200	0402155
D-41982400	0402159
D-41982500	0402159
D-41982600	0302224
D-41982700	0102161
D-41983000	2002167
D-41983100	1102171
D-41983200	0102163
D-41983300	0102180
D-41983300R8	0102180
D-41983400	0102180
D-41983500	0102184
D-41983600	0102184
D-41983700	2602194
D-41983800	0702199
D-41983900	0702199
D-41984100	0102216
D-41984300	1430265
D-41984900	0202268
D-41985200	0102176
D-41985300	2002190
D-41985400	0102449
D-41985600	0202245

DRONNINGBORG / EPPLE MOBIL

OE	Gates
D-41985900	0702212
D-41986100	0202230
D-41986200	0202245
D-41986300	1402307
D-41986400	1654247
D-41986500	1602382
D-41986800	2002237
D-41986900	0902157
D-41987000	0202168
D-41987100	0102176
D-41987200	2602194
D-41987300	1602396
D-41987500	0102643
D-41987600	1402501
D-41987700	2602194
D-41987800	2002190
D-41987900	0702151
D-41988000	0302248
D-41988400	☎
D-41988500	0130272
D-41988600	1630274
D-41988700	1630274
D-41988900	0130272
D-41989000	1630327
D-41989100	1630347
D-41989200	0130326
D-41989400	1630330
D-41989700	1630347
D-41989900	☎
D-41990000	0123224
D-41990001	0119198
D-41990006	0102231
D-41990007	1437204
D-41990008	0272247
D-41990009	0372271
D-41990011	0143239
D-41990012	0372204
D-41990013	0372240
D-41990014	0172221
D-41990019	0143222
D-41990025	0199450
D-41990027	0372223
D-41990037	1630330
D-41990045	0125211
D-41990046	0325213
D-41990048	0223515
D-41990049	0123366
D-41990050	0123224
D-41990051	1524314 EE-TECH
D-41990052	1424253
D-41990053	0124309
D-41990054	0124204
D-41990055	0124208
D-41990056	0125209
D-41990057	0125211
D-41990058	1625207
D-41990059	0226330 EE-TECH
D-41990060	0126295 EE-TECH
D-41990060.00	0126274
D-41990060.01	0126295 EE-TECH
D-41990061	0125209
D-41990062	0325213
D-41990063	0124208
D-41990064	0149339

OE	Gates
D-41990066	0124242 EE-TECH
D-41990067	1424282
D-41990068	0105236
D-41990069	0105447
D-41990100	0105408
D-41990200	0105447
D-41990300	0105408
D-41990400	0105447
D-41990700	0372242
D-41990800	0372244
D-41991000	1472238
D-41991100	0372255
D-41991200	0372240
D-41991300	0324237
D-41991400	1523177
D-41991600	0724321 EE-TECH
D-41991700	1424250 EE-TECH
D-41992000	0323254 EE-TECH
D-41992100	1623297 EE-TECH
D-41992200	1623311 EE-TECH
D-41992300	2023246
D-41992400	1630354
D-41992700	1630327
D-41992800	1623311 EE-TECH
D-41993000	0110288
D-41993100	0203245
D-41993400	0324237
D-41993500	1824175
D-41993800	0325214
D-41993900	0110264
D-41994000	0203294
D-41994200	0725342
D-41994300	0114136
D-41994400	0123252
D-41994500	0125349
D-41994600	1424250 EE-TECH
D-41994900	0113250
D-41995000	0372257
D-41995100	1527171
D-41995200	1514182
D-41995400	☎
D-41995600	1624215
D-41995700	0110196
D-41996100	0372286
D-41996200	1437204
D-41996300	0137367
D-41996400	0372260
D-41996500	1637240
D-41996600	0137352
D-41996700	1118081
D-41997000	0217116
D-41997100	1118090
D-41997200	0137218
D-41997300	0172220
D-41997400	1437256
D-41997500	0337304
D-41997600	0137334
D-41997700	1118108
D-41997800	1837245
D-41998000	0101164
D-41998700	0139211
D-41998800	0101164
D-41998900	0139225
D-41999100	1472236

OE	Gates
D-41999200	0113286
D-41999600	0119407
D-41999700	0137516
D-41999800	0337404
D-45055100	0172228
D-46300102	0172208
D-46300855	0372232
D-46301057	0372232
D-49906300	1472236
D-49907600	0372223
D-49912500	1443193
D-49926000	1900113
D-49926400	0172230
EPPLE MOBIL	
497040	0302219
643954	1401378
643971	1602150
643978	1401101
643985	0101366
644001	0173208
644015	0372223
644032	0200085
644040	0201092
644045	0101088
644056	0301141
644057	0301147
644058	0201152
644061	2301174
644063	1601185
644064	2001086
644077	2354182
644087	0302136
644089	0402155
644094	0302240
644097	0302248
644102	1402336
644107	1403222
644127	1401248
644134	1402387
645515	2305402
10X850	2383223
110X3855	2339360
12.5X1175	0372223
12.5X1225	1472227
12.5X1250	0172230
12.5X1275	0372232
12.5X1350	1472236
12.5X2150	2317192
13X1090	0200085
13X2550	2300192
17X1060	0101085
17X1090	0101088
17X1150	0201092
17X1250	1401101
17X1320	0101105
17X1400	0401111
17X1450	1901115
17X1850	1401144
17X1900	1401147
17X1950	0201152
17X2240	2301174
17X2400	1601185
17X4830	0301373
17X5000	1401378

OE	Gates
19X1975	2329208
19X2770	2329267
20X1000	2354182
20X2500	2354293
20X3150	2354342
20X4000	1454407
20X4250	1454423
22X1700	0302134
22X1870	0302146
22X1950	0402153
22X2000	0902157
22X3100	1602240
22X3200	0202245
22X3330	1602254
22X3740	0202285
22X4400	0202332
22X5055	1402387
25X3750	2330335
25X8600	2330695
3/HB/3830	1824328 EE-TECH
32X14X2000	1510174
32X14X4620	2310362
32X2800	1403222
35X17X1844	0361260
38X17X1493	2311132
4/HB/1490	2325158
55X25X2070	1514192
60X18X1400	0366248
80X3370	0439324
9.5X1275	0173232
BBX3500	2304268
CCX5000	2305381
HCCX5280	2305402
FELLA	
118058	2017255
118311	2117266
121282	1917246
122075	0287303
122076	0287279
122297	1917276
122299	2917288
122649	1537168
122652	1537238
123708	1837288
124976	1917261
124977	1517279
130129	0372253
130968	2437275
FENDT	
28274029	1824172
41921801	2687277
41929000	2001143
41937800	1401231
41939300	0401279
41975300	2904308
41978000	0126299 EE-TECH
41978100	0723264 EE-TECH
41978800	0123398
41979600	1623354
41979800	1625309 EE-TECH
41979900	0226330 EE-TECH
41980500	0715190
41981100	0810228
41981200	0810190

OE	Gates
41986300	1402307
41990001	0119198
41990007	1437204
41990057	0125211
41990059	0226330 EE-TECH
41990064	0149339
340433154	1472251
340433197	0200219
340433253	1601120
340433422	0102183
340433423	0102184
340433474	1902354
340433539	1903342
340433984	1904193
340434138	1960189
340435150	1910179
340435152	1915192
344311117	1423207
344311123	1923257 EE-TECH
344311131	1923295 EE-TECH
344311151	1923499
344311227	1924214
344311318	1925345 EE-TECH
344312128	1927295
685121585	1489286
51968200225	2642192
916201040200	0189280
916.201.040.200	0189280
5196820-0225	2642192
F117.200.010.010	0172221
F117200010010	0172221
F119.202.010.040	0372223
F119202010040	0372223
F395.200.001.010	1573238
F395200001010	1573238
F404.200.040.020	0285294
F404200040020	0285294
F716.200.040.020	0785288
F716200040020	0785288
F718.202.040.010	0285294
F718202040010	0285294
F926.202.040.020	1487223
F926202040020	1487223
F934.201.040.010	1486296
F934.201.040.020	1485268
F934201040010	1486296
F934201040020	1485268
F946.201.040.020	1585272
F946201040020	1585272
X696.519.400.000	0100057
X696.611.611.000	0373182
X696.612.000.000	1573238
X696.612.111.000	0173188
X696.612.200.000	0173232
X696.612.313.000	0173190
X696.612.400.000	1473236
X696.612.401.000	1573238
X696.612.600.000	0173232
X696.612.601.000	0173234
X696.612.602.000	0173234
X696.612.700.000	0173194
X696.612.811.000	0173195
X696.612.913.000	0173197
X696.613.002.000	0173195

OE	Gates
X696.613.200.000	0173234
X696.613.308.000	0373201
X696.613.313.000	0373201
X696.613.501.000	0173231
X696.613.600.000	1473203
X696.613.801.000	0173205
X696.613.901.000	0273228
X696.613.902.000	0273228
X696.614.300.000	0173188
X696.614.513.000	0173214
X696.614.601.000	0173214
X696.614.602.000	0173216
X696.614.700.000	0173219
X696.614.800.000	0373221
X696.614.801.000	0373221
X696.614.802.000	0173223
X696.614.913.000	0173223
X696.615.000.000	0373225
X696.615.001.000	0373225
X696.615.200.000	0273228
X696.615.301.000	1473236
X696.615.401.000	0273228
X696.615.408.000	0173225
X696.615.601.000	0173232
X696.615.603.000	0173232
X696.615.613.000	0173232
X696.615.701.000	0173244
X696.615.702.000	0173247
X696.615.704.000	0173244
X696.615.900.000	0173247
X696.616.000.000	0173225
X696.616.102.000	0173189
X696.616.200.000	1473236
X696.616.201.000	1473236
X696.616.300.000	0173194
X696.616.400.000	0173198
X696.616.600.000	0173245
X696.616.701.000	0173247
X696.616.702.000	0173247
X696.616.702.010	0173247
X696.616.703.000	0173247
X696.616.800.000	0173240
X696.616.913.000	0173232
X696.617.601.000	0172189
X696.617.800.000	0173208
X696.617.900.000	0173231
X696.618.713.000	1472227
X696.619.200.000	0272218
X696.619.413.000	0372231
X696.622.000.000	1472184
X696.622.700.000	0172189
X696.622.800.000	0172189
X696.622.900.000	0372193
X696.623.000.000	0172201
X696.623.200.000	0372203
X696.623.300.000	0372204
X696.623.400.000	0172208
X696.623.600.000	0172214
X696.623.700.000	0172219
X696.623.800.000	0172221
X696.623.900.000	0372223
X696.624.100.000	0172214
X696.624.200.000	0172225
X696.624.300.000	0172221

FENDT / FORTSCHRITT

OE	Gates
X696.624.400.000	1472227
X696.624.500.000	0172230
X696.624.800.000	0172237
X696.633.800.000	1901098
X696.635.500.000	0201108
X696.640.500.000	0173197
X696.640.600.000	0173197
X696.642.000.000	0372240
X696.917.829.000	0172192
X696.944.500.000	0173244
X696.989.501.000	1499300
X696519400000	0100057
X696611611000	0373182
X696612000000	1573238
X696612111000	0173188
X696612200000	0173232
X696612313000	0173190
X696612400000	1473236
X696612401000	1573238
X696612600000	0173232
X696612601000	0173234
X696612602000	0173234
X696612700000	0173194
X696612811000	0173195
X696612913000	0173197
X696613002000	0173195
X696613200000	0173234
X696613308000	0373201
X696613313000	0373201
X696613501000	0173231
X696613600000	1473203
X696613801000	0173205
X696613901000	0273228
X696613902000	0273228
X696614300000	0173188
X696614513000	0173214
X696614601000	0173214
X696614602000	0173216
X696614700000	0173219
X696614800000	0373221
X696614801000	0373221
X696614802000	0173223
X696614913000	0173223
X696615000000	0373225
X696615001000	0373225
X696615002000	0273228
X696615200000	0273228
X696615301000	1473236
X696615401000	0273228
X696615408000	0173225
X696615601000	0173232
X696615603000	0173232
X696615613000	0173232
X696615701000	0173244
X696615702000	0173247
X696615704000	0173244
X696615900000	0173247
X696616000000	0173225
X696616102000	0173189
X696616200000	1473236
X696616201000	1473236
X696616300000	0173194
X696616400000	0173198
X696616600000	0173245

OE	Gates
X696616701000	0173247
X696616702000	0173247
X696616702010	0173247
X696616703000	0173247
X696616800000	0173240
X696616913000	0173232
X696617601000	0172189
X696617800000	0173208
X696617900000	0173231
X696618300000	0173189
X696618713000	1472227
X696619200000	0272218
X696619413000	0372231
X696622000000	1472184
X696622700000	0172189
X696622800000	0172189
X696622900000	0372193
X696623000000	0172201
X696623200000	0372203
X696623300000	0372204
X696623400000	0172208
X696623600000	0172214
X696623700000	0172219
X696623900000	0372223
X696624100000	0172214
X696624300000	0172221
X696624400000	1472227
X696624500000	0172230
X696624800000	0172237
X696633800000	1901098
X696635500000	0201108
X696640500000	0173197
X696640600000	0173197
X696642000000	0372240
X696917829000	0172192
X696944500000	0173244
X696989501000	1499300
X697.171.900.000	1473236
X697.173.500.000	1487253
X697.173.600.000	1487267
X697.174.000.000	2642192
X697171900000	1473236
X697173500000	1487253
X697173600000	1487267
X697174000000	2642192
X969.616.300.000	0173194
X969.617.800.000	0173208
X969616300000	0173194
X969617800000	0173208
FORTSCHRITT	
1111243	1843256
1111725	1437256
1111766	0337404
1113011	1625309 EE-TECH
1113550	1837245
1113864	1837267
1113872	0100321
1113880	1837270
1169411	1849518
1169428	1825178
1169436	0226330 EE-TECH
1169444	2826318 EE-TECH
1169485	1849528
1169508	1871332

OE	Gates
1169983	1371317
1170003	1849667
1170011	1225337
1170028	0125322
1170036	1371317
1170085	1871280
6017105	☎
6101585	0337227
11861926	1819365
20797321	1823326 EE-TECH
20797483	1413193
20797491	1813232
42404429	0337278
60067582	1824417
60143505	1118090
60168160	0224406 EE-TECH
60183586	0213198
60191762	0372240
60203060	2124287
60206963	0172220
60206971	0372255
60506933	1473236
61004680	0125349
61009074	0324279 EE-TECH
61009082	0337348
61009396	2137163
61015851	0337227
61020978	2024376
61020986	0223304
61036454	0323270 EE-TECH
061036454	0323270 EE-TECH
72063911	0124208
99060631	1423274
99060663	2623512
99060738	2624333 EE-TECH
203550660	0713301
203790650	0224223 EE-TECH
204711000	1625309 EE-TECH
204711170	1425228
204711250	0724347 EE-TECH
206787740	1423292
207973050	1824328 EE-TECH
207973130	1823248
207973210	1823326 EE-TECH
208040000	0323377 EE-TECH
208465160	0269238
422166817	1899278
424002335	2699315
424002339	0724347 EE-TECH
424004038	0337304
424004340	1118090
424004424	0102184
424004425	1819305
424004426	1837207
424004428	0372284
424004430	0737236
424004458	1118090
424004654	1472264
665140346	2624333 EE-TECH
761098618	0313269
991186164	0372280
2047108603	1411159
2047109403	1813327
2084651603	0269238

FORTSCHRITT / GASPARDO / GATES / GERINGHOFF / GOMSELMASH / GRIMME

OE	
2084652403	0201109
2084653203	1901098
4031827973	0757372
4032804291	1419300
4032804388	0172225
4032806935	1819305
4043403771	1423292
4128787216	1901133
4129785100	0269238
4129785117	0401111
4131775305	1413195
4131775321	2119259
4131777276	0172230
4140753598	1472238
4221613133	1430265
4221668165	1413195
4221668173	1899278
4221668181	0213259
4240023354	2699315
4240023370	1625309 EE-TECH
4240023387	1425228
4240023395	0724347 EE-TECH
4240040388	0337304
4240043405	1118090
4240043413	0337227
4240044246	0102184
4240044254	1819305
4240044262	1837207
4240044287	0372284
4240044295	0337278
4240044301	0737236
4240044584	1118090
4240046545	1472264
4240053712	0337227
4240053761	1637196
4240129730	2619363
4250121764	1824328 EE-TECH
4250121772	1823248
4250121780	1823326 EE-TECH
4250121872	1813249
4250121882	1413246
4254126402	0323377 EE-TECH
4254126702	0323377 EE-TECH
4254138832	0337304
4254138840	1437256
4254138857	2637200
4254138865	0372244
4254643696	2602304
4255643332	1202193
4260697091	1824294 EE-TECH
4260699960	1824417
4260699977	1523306 EE-TECH
4260699985	0324377
4260699993	1513207
4260703838	1882321
4260703846	0173213
4260703942	1824294 EE-TECH
4260713116	0372262
4260715183	0724347 EE-TECH
4270722236	2623278
4270722252	2787387
8800456628	☎
8811861717	☎
9004940756	0337278

OE	
9900456628	0272247
9911461645	0337215
9911634301	0172211
9911860395	2602244
9911860396	2602244
9911860724	0401111
9911861268	☎
9911861364	2619370
9911861436	2637200
9911861452	0373178
9911861540	2119259
9911861645	0372280
9911861653	2619314
9911861717	2137163
9911861821	0372262
9911861846	1319233
9911861862	2623512
9911861901	0319285
9911861918	0272247
9911861926	2619363
9911862043	0372271
42400044295	0337278
50230000081	1319233
50230000299	1819240
93510216000	0223572
990602685000	2619545
990607398023	0724340 EE-TECH
2047108603/20100	1411159
2047109403/25100	1813327
20797483/03	1413193
20797491/03	1813232
2084651603/70000	0269238
2084652403/70000	0201109
2084653203/70000	1901098
35X1228	1899278
50230000081/02	1319233
50230000299/03	1819240
50X2315	0213197
50X3020	1813249
53070000484/03	0323173
53070000826/03	1413193
53070000829/03	2119259
53070000830/03	1423267
53070000832/03	1819202
53071100087/03	0172230
53075900020/03	1472236
EFH0353	1849667
E-FH0353	1849667
E-FH0354	1225337
E-FH0355	0125322
E-FH0369	1849609
E-FH0377	1824172
E-FH0378	1826176
H88576	/
GASPARDO	
F06010158	1842157
F06010159	1842166
F06010160	1842175
F06010161	1842155
F06010163	1842209
F06010164	1842188
GATES	
61CCB142K	2699302
63CCB165K	2699306

OE	
64CCB170K	2699307
65CCB175K	2699309
GERINGHOFF	
34945	2623222 EE-TECH
034945	2623222 EE-TECH
34969	1202193
034969	1202193
34970	1602195
034970	1602195
34976	0202182
034976	0202182
34980	0323231
034980	0323231
34982	2823241 EE-TECH
034982	2823241 EE-TECH
34984	0723264 EE-TECH
034984	0723264 EE-TECH
34985	1823248
034985	1823248
34987	0323231
034987	0323231
703003	2626224
GOMSELMASH	
38x18-1500	2811136
52x16-1250	2864219
68x24-2600	2899383
68x24-2600K	2899385
K3P00050005	0101245
K3P01010005	2849268
K3P02020005	2811136
K3P02210005	1523259
K3P02250005	0101225
У3С-7-0000000	0201177
У3С-7-0400010	0737236
GRIMME	
B95.02000	0100053
B95.02016	1454222
B95.02024	2954265
B95.02025	2954268
B95.02026	2954273
B95.02033	2954379
B95.02039	0702272
B95.02044	0110142
B95.02045	0118122
B95.02047	2904308
B95.02049	0111232
B95.02058	2001129
B95.02070	1401248
B95.02073	2954223
B95.02079	2954272
B95.02082	2954357
B95.02102	2901281
B95.02104	2910151
B95.02106	0373221
B95.02108	0101088
B95.02111	1437256
B95.02114	0201161
B95.02116	0337278
B95.02117	2901237
B95.02120	2902231
B95.02121	2954457
B95.02122	2954305
B95.02125	1837267
B95.02126	0137334

GRIMME / HESSTON / HOLMER / JENZ

OE	
B95.02128	0337304
B95.02131	2954457
B95.02136	1401134
B95.02142	1401248
B95.02144	1437204
B95.02145	1437256
B95.02147	2954357
B95.02149	0301141
B95.02150	0301155
B95.02151	2837174
B95.02155	1901115
B95.02160	1601103
B95.02163	2901252
B95.02165	1401137
B95.02167	2101138
B95.02169	0372262
B95.02170	0399322
B95.02171	2901237
B95.02193	1118105
B95.02205	0337215
B95.02206	2937224
B95.02207	2902164
B95.02208	1118108
B95.02209	0102163
B95.02210	2602168
B95.02211	2937252
B95.02223	2137177
B95.02224	2937202
B95.02225	0137218
B95.02226	1402307
B95.02227	1402433
B95.02228	2801104
B95.02229	2902344
B95.02241	0101151
B95.02247	0102419
B95.02250	0301155
B95.02259	0202222
B95.02261	1402622
B95.02265	0302326
B95.02269	0201152
B95.02272	1402387
B95.02273	0202235
B95.02274	1402355
B95.02280	1472273
B95.02281	2602194
B95.02288	0104242
B95.02294	2924470
B95.02297	0301211
B95.02304	0102189
B95.02306	2637200
B95.02308	0302154
B95.02309	0172253
B95.02314	1118081
B95.02319	2787309
B95.02322	2987589
B95.02329	0102419
B95.05856	1824294 EE-TECH
B95.05902	2001162
B95.06121	0724321 EE-TECH
B9502000	0100053
B9502016	1454222
B9502024	2954265
B9502025	2954268
B9502026	2954273

OE	
B9502033	2954379
B9502039	0702272
B9502044	0110142
B9502045	0118122
B9502047	2904308
B9502049	0111232
B9502058	2001129
B9502070	1401248
B9502073	2954223
B9502079	2954272
B9502082	2954357
B9502102	2901281
B9502104	2910151
B9502106	0373221
B9502108	0101088
B9502111	1437256
B9502114	0201161
B9502116	0337278
B9502117	2901237
B9502120	2902231
B9502121	2954457
B9502122	2954305
B9502125	1837267
B9502126	0137334
B9502128	0337304
B9502131	2954457
B9502136	1401134
B9502142	1401248
B9502144	1437204
B9502145	1437256
B9502147	2954357
B9502149	0301141
B9502150	0301155
B9502151	2837174
B9502155	1901115
B9502160	1601103
B9502163	2901252
B9502165	1401137
B9502167	2101138
B9502169	0372262
B9502170	0399322
B9502171	2901237
B9502193	1118105
B9502205	0337215
B9502206	2937224
B9502207	2902164
B9502208	1118108
B9502209	0102163
B9502210	2602168
B9502211	2937252
B9502223	2137177
B9502224	2937202
B9502225	0137218
B9502226	1402307
B9502227	1402433
B9502228	2801104
B9502229	2902344
B9502241	0101151
B9502247	0102419
B9502250	0301155
B9502259	0202222
B9502261	1402622
B9502265	0302326
B9502269	0201152

OE	
B9502272	1402387
B9502273	0202235
B9502274	1402355
B9502280	1472273
B9502281	2602194
B9502288	0104242
B9502294	2924470
B9502297	0301211
B9502304	0102189
B9502306	2637200
B9502308	0302154
B9502309	0172253
B9502314	1118081
B9502319	2787309
B9502322	2987589
B9502329	0102419
B9505856	1824294 EE-TECH
B9505902	2001162
B9506121	0724321 EE-TECH
HESSTON	
Search under “New Holland” partnumbers	
HOLMER	
1077010507	0173184
1077011590	1472238
1077011661	0173247
1077011662	1472227
1077021831	0272218
1257021870	0385263
1257021912	2685226
1257025598	0272247
JENZ	
303003316	1499348
303008888	1425215
303015496	1449407
303015903	1423179
303015938	1423141
303016005	1823248
303016531	1484424
303016560	2684485
303016817	3084647
303017021	2684462
303017022	2849290
303017023	1923257 EE-TECH
303017344	☎
303017422	1924192
303017545	☎
303017630	1425408
303017738	1426410
303017844	☎
303018160	3084673
303018200	1425215
303018204	2684462
303018206	2849290
303018208	1425254
303018210	1923257 EE-TECH
303018212	1423179
303018214	1449407
303018216	2684485
303018218	1484424
303018220	1426293
303018224	3049260
303018226	1499503
303018228	1425228
303018231	3025344

OE	Gates
303018233	3084427
303018235	0126295 EE-TECH
303018237	1425303
303018239	3023149
303018241	3084647
303018243	3049273
303018247	1499350
303018249	0884317
303018251	3049503
303018255	1225340
303018257	3084444
303018261	3084644
303018263	3084456
303018265	0325362
303018282	3084488
303018288	3026406
303018292	3049284
303018307	3084540
303018320	0225286 EE-TECH
303018322	3099490
303018330	☎
303018334	3084501
303018338	3084490
303018346	3084496
303018358	3084588
303018508	3099676
303018539	3099616
303018553	3084430
303018919	1449458
JFABRIKEN	
1175170	1937248
13612405	2602125
13614101	1401161
13614401	0502165
13614403	0302179
13615202	1601185
13615402	0102184
13615404	2602194
13616401	0702225
13616404	0502215
13616405	0102216
13616406	0702198
13616407	0302200
13616410	0202209
13617403	2002253
13618311	1402336
13618403	1602254
13618505	1903315
13618511	0203677
13618512	2803719
13619733	2787257
13619737	0337304
13619803	1137171
13619906	1419300
13621001	1443145
13621002	0243152
13621003	1525391 EE-TECH
13621005	1443145
13621007	0243152
13621016	1118108
13629804	2937202
JOHN DEERE	
46098	0272215
114489	1485304

OE	Gates
518615	0202610
856559	0102180
857862	0202182
5121847	1473203
5123192	0173225
5124432	0173197
5124512	0373221
5124814	0373178
190040211	1472251
20745/190	0372284
40745/804	0102129
5ZN50866	0702292
A2745R	0372199
A3037R	0372199
A4287R	0372223
A4897R	0173223
AC144	2002283
A-C144	2002283
AC72	0102148
A-C72	0102148
AE28944	0101158
AE31453	☎
AE32893	0244462
AE45931	0244462
AE48912	0304162
AH122862	0202493
AH127866	0302179
AH129955	0268341
AH131960	0302146
AH138762	0202261
AH139436	0702151
AH140623	0223148
AH144618	0251449
AH144891	Chain
AH150678	1402217
AH158880	0102181
AH160080	0202235
AH161460	Chain
AH163931	1602150
AH167161	Chain
AH194916	0202187
AH200019	0240397
AH200020	0303422
AH202176	Chain
AH202773	0302200
AH20314H	0200073
AH206701	Chain
AH206862	Chain
AH21301	0203218
AH232566	Chain
AH232955	0224146
AH233198	2002237
AH236689	0302326
AH62667	0201090
AH75638	0203169
AH76154	1402158
AH79627	2602331
AH79671	0203174
AH80500	1401175
AH80503	1401199
AH80505	0201191
AH84633	0203206
AH87127	1403222
AH87197	0201123

OE	Gates
AH89436	0202168
AH96300	0102129
AH96333	0201191
AH98052	2002167
AJ58940	0272247
AJ58970	0272247
AN190205	0272247
AN190948	0902157
AN194750	0301183
AN194751	0301183
AN194916	0202187
AN194917	2602194
AN273251	0173249
AN273299	0302146
AN274215	0201102
AN274672	0102184
AN274673	0172216
AR29285R	0172216
AR32659R	0173244
AR32661R	1573238
AR41574	0173253
AR41576	0173245
AR41628	0200105
AR41629	0173240
AR43219	0122155
AR46970	0373264
AR50188	0173249
AR51059	1472251
AR53099	0372258
AR53258	0372255
AR54592	0372255
AR56638	0173253
AR57266	0372255
AR70413	0372262
AR70663	1401127
AR72036	0272247
AR74662	0372260
AR78130	0372245
AR86496	0399322
AR87671	0399322
AR93012	0401111
AR99382	1401125
AS26639	0205210
AS33603	0203273
AT23317	0173245
AT23999	0373225
AT24833	0372244
AT262958	0285337
AT28030	0273228
AT31010	0172253
AT31820	0372242
AT58166	1472251
AT81010	0172253
AXE13650	0202203
AXE15956	Chain
AXE17053	Chain
AXE17662	0249794
AXE23140	Chain
AXE25334	0269362
AXE28813	Chain
AXE29294	0204136
AXE33760	1423179
AXE34908	0299317
AXE37395	0226751

JOHN DEERE

OE	
AXE37950	1901136
AXE42095	0202166
AXE51063	1449787
AXE52471	0269343
AXE53952	Chain
AXE54619	Chain
AXE58124	0223166
AXE60961	0299418
AXE70630	0299420
AXE70751	0299419
AXE72268	0284820
AXE72269	0284827
AXE72694	0299848
AXE72695	0299855
AYC10132	0723221 EE-TECH
AYC10133	0203272
AYC18136	0203290
AZ100805	0101172
AZ100806	2301174
AZ100807	1601166
AZ100808	0201170
AZ100809	0201173
AZ100810	2301174
AZ101386	0204159
AZ104276	0299661
AZ17866	1472251
AZ22534	0299231
AZ22914	0203294
AZ25400	1118157
AZ35635	0203281
AZ36853	0237438
AZ37807	0203290
AZ39676	0201155
AZ39677	0204153
AZ39678	1101149
AZ39883	0276589
AZ39891	0244521
AZ40077	0203295
AZ42604	0219123
AZ43804	0201161
AZ43805	0101088
AZ46283	0372240
AZ51087	2502099
AZ51309	0276589
AZ51310	0241523
AZ51311	0240521
AZ51312	0244521
AZ51313	0299625
AZ51314	0240514
AZ51638	0299661
AZ51639	0299660
AZ51640	0241551
AZ51641	0240549
AZ53559	0299653
AZ53569	0241543
AZ53570	0240542
AZ56225	0219123
AZ56472	1201153
AZ58519	0299666
AZ58814	0204153
AZ61336	0204156
AZ61353	0201173
AZ61360	1601166
AZ61389	1401161

OE	
AZ61391	0101158
AZ62282	0201170
AZ62283	2301174
AZ63463	0201173
AZ63883	2301174
AZY70719	2624333 EE-TECH
AZY70722	0902157
AZY70723	0102161
AZY70731	1403222
B1587R	0172192
B17267B	1900106
B2893R	1272212
B3288R	0173214
C22534	1901115
CA20514	0172219
CA20518	0201090
CA22534	1401113
CC100317	0224234
CC100318	0324230
CC100752	0224390 EE-TECH
CC100753	0724370 EE-TECH
CC102733	0224243 EE-TECH
CC18089	1402127
CC19065	0269234
CC20041	0401111
CC21115	0269249
CC26949	1424219
CC26973	1524207
CC32123	0217106
CC38627	1443164
CC38702	0224198
CH10367	0172208
CH12865	0172214
CH14022	1272212
CH15509	0372204
CH16856	0172225
CM15517	2637200
CO13837	2902164
CP144	2002283
CP72	0102148
CQ00626	0203356
CQ00628	0227262
CQ02867	0212267
CQ03265	0302179
CQ03283	0202493
CQ03457	2002237
CQ03478	0201343
CQ03492	0401111
CQ05106	1513240
CQ05208	0203351
CQ06154	0372245
CQ08238	1900196
CQ08239	0300201
CQ12236	1472227
CQ13375	0501121
CQ13673	1472184
CQ13800	0273217
CQ13837	0502165
CQ17755	0201112
CQ24186	1401272
CQ24340	1472264
CQ24356	0400100
CQ28344	0223563
CQ31965	0223204

OE	
CQ33577	0172208
CQ33886	0172206
CQ34122	0172211
CQ34345	2623278
CQ35426	0224292 EE-TECH
CQ35530	0223185
CQ35531	2023186
CQ35559	0223549
CQ37755	1472236
CQ39824	0223561
CQ40221	0211140
CQ40222	0223185
CQ42066	0285276
CQ42150	2602213
CQ45617	1485268
CQ48048	0323282
CQ50143	1585345
CQ51920	0285343
CQ51921	2585303
CQ53369	1901133
CQ53372	1424238 EE-TECH
CQ57311	0200134
CQ58873	0285343
CQ58875	0285301
CQ61084	1400264
CQ71838	☎
CQ71839	☎
CQ72707	1400264
CQ74130	1118081
CQ75223	0237180
CQ76415	1118081
D3116R	0372203
DG10067	1400264
DQ20810	1472236
DQ23754	0372255
E12574	0302136
E127010	2025172
E130084	0201090
E16774	1102171
E35829	☎
E36784	1402129
E37821	0224153
E37905	0102189
E40574	0302224
E43565	2002298
E46113	0202168
E48060	0268344
E48063	0209138
E48310	0101158
E50873	0225155
E50924	1602382
E50973	0100083
E52646	0302197
E52878	0283232
E53936	0200130
E56262	0269238
E57428	0172225
E58483	0502215
E58967	0225151
E60212	0302200
E61137	0202182
E61326	0201102
E61748	0372272
E61749	0372260

JOHN DEERE

OE	Gates
E63031	0102216
E63457	0200090
E63957	2002342
E65863	0225182
E69424	2002135
E69644	0122155
E70675	0202113
E72435	0270259
E72830	0201108
E75596	0201108
E76854	1423188
E78277	0101088
E91575	1900106
E98361	0225155
EP0020	0201109
ER201382	0288278
ER201383	0288278
FH10164	1424238 EE-TECH
FH10165	1424250 EE-TECH
H101352	0200125
H101436	0202261
H101469	0302146
H101813	0200110
H103344	0202528
H105040	1425256
H108175	0244255
H108668	0210144
H108669	0210149
H110085	0302251
H110300	0702295
H110375	0325248
H110921	0211317
H111519	0703313
H112421	0201258
H113565	0172219
H113749	0213197
H115759	0215195
H115881	1425257
H116422	0211323
H118618	0325248
H118730	2002253
H122189	0272215
H125380	1402358
H125381	0202332
H125565	0203321
H125711	0211357
H126345	0203351
H128010	2002365
H128234	1401412
H131169	0202493
H132808	0201108
H132809	2601106
H133576	1400264
H133577	/
H134216	/
H134344	0172217
H134437	0372245
H134772	0372244
H135458	0202595
H136881	0202245
H136963	0302240
H137207	0172230
H137264	0203187
H137670	0251265

OE	Gates
H137830	2602605
H138761	0302251
H138762	0202261
H139963	0201109
H140160	1403325
H140404	0210213
H141166	1402609
H141167	0202610
H141417	0102257
H141429	0244481
H143700	0402155
H143869	1400264
H145026	0372245
H145158	1400286
H145517	0402153
H145528	0301183
H145994	0225253 EE-TECH
H146636	0217106
H146637	0172214
H151952	1403325
H152146	0210220
H152180	1410203
H153297	0223148
H154723	0902289
H154731	0402159
H155525	0223318
H155998	0227365
H156541	0227408
H156796	0203363
H156863	0212364
H157104	1400153
H157105	☎
H157514	0227242
H157523	0323281
H157726	0223404 EE-TECH
H157727	0223372 EE-TECH
H157732	0211317
H158512	1402501
H160080	0202235
H160171	0202610
H160405	0223139
H160406	0217140
H160654	0202332
H161339	0213197
H161648	0211357
H161795	0223137
H161796	1901094
H161945	0227437
H162310	0244394
H162541	0227344
H162629	0215195
H162727	0727301
H163106	0244488
H163515	0285325
H163576	0225253 EE-TECH
H164368	0244287
H164452	2001086
H164870	0201109
H165015	0102181
H165072	0210189
H165545	0251449
H165708	0223201
H166077	0302224
H166457	0212325

OE	Gates
H166457	0218726
H166759	0202517
H166870	0285327
H168301	0102257
H169007	0200285
H169449	0251449
H170047	0223140
H171386	0301211
H172610	0385349
H173024	0212312
H174364	☎
H174367	0244275
H174368	1527332
H174451	☎
H174455	0385331
H174456	0285249
H174457	0227353
H174885	0227353
H175434	0223372 EE-TECH
H175467	0285264
H175587	0202517
H175628	0200328
H175632	0200285
H175742	0215195
H176765	0227482
H176766	0227255
H176882	0203210
H177177	0224390 EE-TECH
H177178	1524411 EE-TECH
H177186	0285333
H177263	1402609
H177383	0203437
H177442	1524427
H177589	0200109
H177887	0285339
H177888	0285343
H178037	0300137
H178757	0285244
H201334	0211310
H201498	0200128
H201571	0323281
H201596	0244278
H201794	0302227
H201821	0227204
H201851	0227408
H201916	0200140
H202646	0202245
H202647	0302251
H202821	0227262
H203393	1411351
H203473	0303343
H203474	0203302
H20407	0702225
H204133	0227208
H204747	0223316 EE-TECH
H205167	0211362
H205169	0211322
H205209	0227218
H205240	0285339
H206048	0810190
H206738	1402501
H206807	0300137
H207851	0251498
H208431	0251431

JOHN DEERE

OE	
H209507	2027389
H209606	0102161
H210001	0102231
H210003	2602213
H210476	0215195
H211581	0257264
H211601	0210209
H213353	0100160
H214241	2500346
H214375	1485332
H215028	0215195
H215388	0210192
H215389	0210213
H216026	0227204
H216027	0227218
H216850	0244438
H216851	0144386
H217141	0217141
H217141	1813327
H217352	1527332
H218197	0244364
H218198	0202285
H218644	0227208
H218645	1402501
H218646	0227218
H218726	0212325
H218726	0218726
H218728	0212364
H219182	0102257
H21925	0202245
H219251	0227204
H220051	0204251
H220052	0744331
H220053	2002253
H220747	1527332
H220884	0302227
H220911	0217141
H220911	1813327
H221273	0200365
H221324	0102231
H221327	2602213
H221498	0251498
H221731	0227208
H221732	0227204
H221733	0227218
H221990	0244316
H223212	0227290
H223230	0203515
H223384	0244285
H223385	0227253
H224184	2002237
H224185	3023237
H225035	0244275
H22529	1401234
H228250	0744360
H228260	0244275
H228261	2625326 EE-TECH
H228346	0244316
H228347	0240274
H228348	0244275
H228563	0302281
H229018	0244438
H229019	0144386
H229882	0244364

OE	
H230230	0257274
H230909	0210192
H232237	1602240
H232394	0110215
H232997	3023237
H235564	0223316 EE-TECH
H236472	0257264
H23817	0302179
H238822	0285328
H238831	0285316
H238867	1400153
H238869	0200076
H238870	0200143
H238871	1400076
H23927	1903244
H23950	0202235
H240885	0102257
H240888	0240322
H240895	0702225
H240972	0202222
H240974	0244307
H241000	0244329
H241212	3027274
H241230	0744331
H24984	0110126
H25645	0210244
H26858	1401275
H27433	0102174
H28770	0172214
H29528	☎
H30634	0172208
H33885	0203292
H35998	0313283
H62560	0201090
H63772	1472238
H64206	0112200
H64913	1410203
H75565	0213197
H75816	0312172
H75846	0213224
H75847	0112223
H75911	/
H76028	0203258
H76030	0210254
H76136	1902120
H76150	0202126
H76273	0210144
H77010	1402336
H77019	0203273
H77021	1403223
H77683	1900095
H77765	0203300
H77766	0202300
H79235	0272247
H79236	1400119
H79237	0372258
H79285	0201264
H79787	0202404
H79789	1402433
H79796	0203351
H79917	0502215
H80103	0202261
H80159	0201215
H80726	0210131

OE	
H80896	0200107
H80897	0172230
H81222	0702292
H81378	0372232
H81524	0202222
H81653	1402469
H81742	1472236
H82318	1900136
H82479	1573242
H82724	0200107
H83078	☎
H84421	0224243 EE-TECH
H84422	0224234
H84424	0203132
H84425	0244255
H84441	0211250
H84462	0244253
H84740	0372262
H84745	0172253
H85377	1472251
H85382	0172235
H86039	1900132
H86060	1900136
H86061	0200143
H86259	0242268
H86271	0372258
H86272	0372262
H86273	0372232
H86274	0372223
H86275	0172228
H87296	0239286
H87459	0172211
H87648	0702212
H91814	0211317
H92080	☎
H94254	1537326
H94373	0372260
H94508	0244357
H96248	0210149
H96408	0224243 EE-TECH
H96414	0202139
H96421	0225236
H96422	0225245 EE-TECH
H96423	0224234
H97929	0203366
HAN1177	☎
HAN1220	☎
HXE100455	1917250
HXE102288	0227564
HXE10501	0244285
HXE10556	0227253
HXE107624	0200220
HXE11117	1285316
HXE11255	0203515
HXE114322	0285420
HXE12425	0224476
HXE12426	0224256
HXE12427	1424250 EE-TECH
HXE124868	0744331
HXE124869	3027274
HXE124870	0327375
HXE130117	0172214
HXE135689	0299418
HXE137654	0223163

JOHN DEERE

OE	
HXE13951	0270313
HXE13957	0270310
HXE145524	0172214
HXE15546	1443167
HXE15547	0172228
HXE15556	0302326
HXE15594	0210192
HXE15671	0227242
HXE16927	0227395
HXE16928	0203354
HXE17071	0285251
HXE17164	1423198
HXE19401	0823205
HXE20763	0223557
HXE22087	0285329
HXE22090	0242166
HXE22617	0211130
HXE23801	0711194
HXE24085	0200093
HXE24086	0200080
HXE24210	0202245
HXE24688	1485268
HXE28843	1485332
HXE32548	0286295
HXE32806	0185337
HXE33641	0385315
HXE34465	1100172
HXE35958	0200118
HXE36535	0244394
HXE38073	0200111
HXE39119	0270364
HXE39397	0323244
HXE40179	0200078
HXE40946	0285308
HXE41402	0285316
HXE43428	0285276
HXE45928	0217141
HXE46027	0251449
HXE47152	0244374
HXE50398	0227342
HXE50399	0213316
HXE51101	0215195
HXE51300	0202609
HXE54503	0257274
HXE57305	0227281
HXE58284	0211126
HXE61507	1485352
HXE62680	1470303
HXE63308	0211126
HXE63990	0251431
HXE64200	0172206
HXE65360	0223225
HXE65361	0224227
HXE68015	0200093
HXE68016	0200082
HXE69280	0284297
HXE69281	0284298
HXE69321	0327375
HXE71043	1585272
HXE71061	0373264
HXE71248	☎
HXE72209	0202196
HXE72281	0223204
HXE73027	0224354

OE	
HXE73048	2624484
HXE73049	1423214
HXE73530	0224252
HXE73868	1423470
HXE74209	0223223
HXE74439	1102189
HXE74517	0202477
HXE74560	0202268
HXE75054	0301211
HXE75142	0202181
HXE76183	0228258
HXE78199	0285420
HXE79106	0285314
HXE79558	0173227
HXE80480	0285263
HXE82335	0202517
HXE86445	0201289
HXE87482	0301243
HXE88507	0385263
HXE88564	0227263
HXE88939	1424259
HXE88940	0227265
HXE90896	0285300
HXE93098	0270346
HXE94485	0215195
HXE94488	1425257
HXE94905	0200146
HXE95150	1485353
HXE95151	0285320
HXE95511	0257264
HXE95935	0227406
HXE98150	0211218
HXE99294	1310191
J101813	0200110
J57007	0385323
J57234	0372203
KB1307032-1	0201108
L101411	0385323
L110391	0785326
L110599	0785285
L110600	0284285
L110602	0785319
L110603	0285320
L110605	0285325
L110606	0285327
L110607	0285329
L110608	0285330
L110609	1485332
L111148	2584288
L111169	0284286
L111170	0785326
L111599	0285346
L111600	0285343
L111601	1585345
L111602	0385349
L111685	2785290
L111801	0185337
L111804	0385323
L111933	0285333
L112388	0285337
L114286	0285301
L114290	0285337
L114292	0285346
L114293	0285348

OE	
L114468	0385349
L114487	0285301
L114488	0285303
L114489	0285304
L115657	0285329
L115658	0285330
L115659	0385331
L115660	0785319
L115661	0785319
L115685	2785290
L153280	0285303
L153281	0285337
L153282	0285346
L153285	0285343
L155538	0285343
L169272	1485350
L169273	0285329
L169990	0284216
L202134	0385349
L41330	0372262
L41331	1699317
L4276N	0202168
L4339N	0202187
L4490N	0402159
L53299	0372275
L53636	0301155
L53647	0201215
L53676	0372268
L59206	0372268
L79344	0385323
L79945	1485332
LCA67563	1401145
LVU11659	0200073
LVU11661	0272215
LVU11662	0172216
M110978	2300192
M117636	1901251
M118549	0104232
M120381	0104242
M125661	0299266
M127523	0101172
M133858	0299380
M136297	0300207
M140021	0204221
M143888	2604217
M150717	0299335
M150718	0299380
M152630	0300207
M154960	0101230
M1862T	0173186
M1900T	0173206
M40757	0200146
M41592	0200076
M41593	0400108
M41642	0200118
M42485	0200086
M44113	1383235
M44272	1200149
M45862	0172225
M71135	1473203
M800313	1473203
M800347	0173207
M801821	0272210
M802627	0172214

JOHN DEERE

OE	Gates
M802674	0173207
M805011	0172208
M805441	0172208
M808685	0172214
M809527	0172217
M81037	0372197
M811284	0173207
M811285	0173208
M82461	0272210
M82462	0200124
M82720	0200085
M83837	0200166
M86996	0100164
M95728	0201215
MG787800	0373225
MIU10141	0283253
N110051	0302248
N110085	0302251
N111527	0102137
N111623	0268271
N113642	0100083
N115368	0201092
N117398	0201092
N117674	1400087
N119624	0225225 EE-TECH
N121113	1902206
N121114	0302197
N121116	2002167
N121235	1402355
N124460	0268271
N125041	0702212
N12551	0202230
N125756	0268310
N128930	0200124
N129368	0201146
N129508	0202332
N129916	0300201
N129955	0101105
N150864	0101105
N15201	0102125
N15202	0200124
N154412	0101085
N154802	0268234
N15527	0122155
N15697	1472251
N190043	0173223
N193822	0225225 EE-TECH
N202856	0372257
N220403	0268303
N220907	1423192
N221266	0200208
N223125	2023199
N274995	1424251
N277058	0224144
N303353	0224225
N304072	0285297
N30716	0702272
N308133	0285264
N310738	0285249
N31437	0102176
N31649	0283227
N33746	2001162
N34820	0203211
N34881	1400072

OE	Gates
N35158	2602145
N377655	1423207
N381930	1423207
N381931	0823205
N407525	0285309
N51225	2501072
P40058	0212267
P40058H	0212267
P41508	0102129
P46553	/
P47885	0702292
P49415	0102189
P49604	1401180
P50335	1602254
P51165	2001129
P55377	0372232
R106120	0285301
R106122	2485285
R106123	1485350
R111090	0342155
R115614	0385331
R115935	0385354
R115936	0385331
R116307	0272210
R116308	0172214
R116492	1485304
R118317	0285294
R118318	1485332
R120524	0385306
R120852	0785288
R122126	0285274
R123293	0185275
R123294	0785286
R123296	0285276
R123306	1585280
R123307	0285273
R123308	0285280
R123432	0785286
R123436	0785278
R123437	0785286
R123438	2385277
R123439	0285274
R123440	0785286
R123441	2385277
R123442	0785278
R123445	1585280
R123449	0185275
R123450	2385277
R123451	0285280
R123453	0285281
R123454	0285281
R123456	0785278
R123457	2985284
R123458	0785285
R123459	0785285
R123460	0785285
R123461	0285281
R123462	0285281
R123463	1885281
R123464	0285282
R123465	1485332
R123466	0285333
R123468	0785284
R123469	0785285

OE	Gates
R123470	0285333
R124785	0285254
R124786	0285303
R125361	2885308
R128196	0785276
R128197	0385289
R128198	0285291
R128199	0285294
R128200	1985296
R128201	0285297
R128202	0285299
R128203	0285299
R128204	0285303
R128205	0285306
R128206	0285309
R128209	0385312
R128210	0285263
R128502	0372255
R128806	0289299
R129083	0385306
R129738	0285345
R130478	0289309
R130889	0285318
R131083	0242193
R131213	0242131
R131230	0242131
R131433	0285330
R131435	0785321
R131622	0289304
R132159	0285348
R133402	0285330
R133518	0285309
R133693	0285257
R133695	0285240
R133696	0242166
R133697	0285299
R133701	0285251
R133702	0285292
R133703	0285303
R133704	0289288
R133706	0289296
R133707	0289312
R134299	0785319
R134594	0285339
R134625	2985284
R134629	0289301
R134630	0289305
R134631	0289311
R134632	1389285
R134633	0289290
R134634	0289300
R134635	0242166
R134636	0285243
R134637	2585303
R134638	0385263
R135169	0285271
R135188	0185340
R135192	0785285
R135193	0385323
R135194	0285333
R135195	2985284
R135196	0285271
R135198	0285346
R135199	0285343

JOHN DEERE

OE	
R135200	2685289
R135438	1885281
R135568	0785288
R135589	2485285
R135590	0785276
R135591	0385289
R135592	0285291
R135593	0285291
R135594	0285292
R135595	0285293
R135596	0285294
R135597	0285299
R135598	0285295
R135599	1985296
R135600	0285297
R135601	0285299
R135602	0285301
R135603	0285303
R135604	0285304
R135605	1485304
R135606	0285306
R135607	0285309
R135608	0285309
R135609	0285310
R135610	0285312
R135611	0385312
R135612	0285348
R135613	0285348
R135614	0385354
R135615	1485350
R135663	1485350
R135664	1485353
R135665	0785355
R135680	0785284
R135681	2385277
R135822	0285274
R135823	0285303
R135824	0285295
R135826	0785284
R135977	0785285
R136235	0285337
R136284	0285325
R136384	0285281
R136535	0785288
R1561R	0173240
R157686	0242131
R157687	0285254
R157688	0285303
R164820	0285249
R174754	0285309
R175712	0285299
R175825	0189283
R175826	0285306
R181917	0385349
R181918	0285263
R190199	0285301
R199163	0285301
R200920	0285293
R200921	0285314
R202628	0285346
R202629	0285263
R205438	0242185
R206983	0285293
R208755	0285314

OE	
R210808	0285317
R211183	0285257
R21525R	0173240
R216071	0284271
R221R	0102114
R222393	0210103
R228118	0285294
R228566	0285316
R230995	0285268
R239551	0211129
R241746	0285346
R245222	0285346
R245223	0285345
R251425	0285345
R265241	0285348
R265242	0385349
R26606R	0372240
R26607R	0372242
R267275	1485350
R269530	0285263
R269531	0285263
R270859	0285320
R270966	0284275
R29474R	0372204
R300399	0211126
R307304	0385252
R41627	0372242
R41628	0372244
R41681	0372242
R46098	0272215
R46113	0272247
R46570	0122155
R49422	0272218
R500089	0385289
R500090	0285348
R500093	0285297
R500173	0285329
R500194	0184270
R500244	1585332
R500377	1885281
R500378	0285345
R500380	0385335
R500381	0385331
R500382	0285337
R500383	1885281
R500384	1585280
R500385	0285346
R500616	1585272
R501007	1585272
R501017	1585272
R501053	0785285
R501191	0285356
R501241	1485352
R501266	1485258
R501308	0285346
R501353	0385354
R501423	1485350
R501458	0285312
R501530	0385315
R502016	0285318
R502078	0285357
R502086	0285311
R502186	2885308
R502306	0289319

OE	
R502416	0285337
R502417	0285317
R502418	0285314
R502461	0289300
R502476	0285291
R502599	0285281
R503312	0242215
R503505	0785321
R503725	0785321
R503726	1485268
R503814	0385270
R503932	0385323
R504022	0285281
R504618	1485332
R504963	0285276
R505186	0785285
R505810	0384334
R515209	0285325
R515218	2884339
R515222	0384336
R521053	0285329
R521259	0385335
R52507	0172253
R52603	0372255
R52604	0372257
R528333	0284331
R529390	0285311
R531353	0785278
R53258	0372268
R533664	0785284
R536677	0285276
R551022	1485304
R551297	0385260
R63900	0172217
R69393	0372242
R69562	0172214
R70871	0200118
R71459	0172216
R71602	0172216
R71603	0172214
R73189	0272218
R73784	2787265
R73785	0401111
R73789	0372245
R76835	0172214
R77252	0172208
R79024	0372242
R82009	0272215
R82174	1401110
R82602	0101099
R87151	0287279
R87152	0301118
R87153	2601106
R87154	0201108
R91407	1401113
R95917	2985284
R95924	0385331
R96255	0185340
R97758	0201092
R97939	1401101
R97940	0201102
RE10219	0243207
RE12086	1699317
RE29018	0372260

JOHN DEERE

OE	Gates
RE37851	1472264
RE41942	0372258
RE44538	0372245
RE49979	0272218
RE50215	0372257
RE503159	0372258
RE51551	0372245
RE52226	1401204
RE52908	1472251
REC020699600	☎
REC309001600	☎
RG60467	0384334
S08035	0902289
S17044	☎
S17045	1400177
S33510	0102183
S33512	0723221 EE-TECH
S33602	0766322
S33605	0227439
S33607	1823326 EE-TECH
S33721	0240359
S37687	0213311
S42162	0205207
S42163	2625330
S43359	0202213
S60011	1424276
S60018	1202193
S60021	2625326 EE-TECH
S60022	0102181
SA00101	2002253
SA00201	0202268
SA00301	0102108
SA00401	2002211
SA00601	1602240
SA00701	0203273
SA00901	0101430
SA01001	1901094
SA01101	0402131
SA01401	0110126
SA01701	1402336
SA01801	0202172
SA01901	0202182
SA02001	1602150
SA02101	0372244
T10552	0173197
T10552T	0173197
T111546	0283224
T11961T	0373221
T12042	0273215
T12267T	0573202
T12530T	0173222
T160034	0285293
T164949	0285251
T178409	0285293
T178410	0785288
T178411	0285357
T178413	0285295
T178414	0385289
T178415	0785278
T178417	0285282
T178419	0285303
T178420	2385277
T178421	0385306
T178422	2985284

OE	Gates
T178423	0385312
T178538	0285294
T184592	0285301
T184594	0785285
T185061	0285294
T186776	0285281
T190809	0285291
T190817	0285297
T197521	2385277
T199T	0173214
T20161	0201096
T20334	0201092
T20334T	0201092
T23505	0201092
T23526	1901098
T24473	1901098
T24757	1901098
T25130	1901094
T26755	0372244
T31710	1601103
T318371	1485352
T323515	0785321
T32517	0273217
T53320	0172217
T60985	0173225
T626T	0173225
TCU13401	1401271
VK648204	0724423
VK648215	1424219
VK648216	2624484
W26375	0210213
W35598	☎
W35600	☎
W35774	☎
W35813	☎
XCC24721	0324198
XZ48472	0372203
YC10133	0203272
YC10134	0302184
YC10135	0723221 EE-TECH
YC10136	0214221
YC10137	0227439
YC10138	1823326 EE-TECH
YC10139	0240359
YC10140	0213311
YC10141	0323270 EE-TECH
YC10142	0205207
YC10143	2625330
YC10144	2602213
YC10145	0202187
YC10147	2625326 EE-TECH
YC10148	0102181
YC11422	0324279 EE-TECH
YC12444	0300170
YC14551	1423329
YC14805	0727299
YC14806	1402293
YC14807	0102163
YC14936	1600168
YC15092	0213224
YC15096	0302200
YC16236	0202130
YC16311	0202261
YC17290	0244242

OE	Gates
YC17373	2623278
YC17499	0902122
YC17657	1425228
YC19014	0323219
YC19015	0223201
YC19016	0227439
YC19017	1823326 EE-TECH
YC19018	0299231
YC19020	1602240
YC19021	0201108
YC19023	0210114
YC19025	0202222
Z101214	0289340
Z103479	0100321
Z103844	0124208
Z103845	0223195
Z103861	0202268
Z103867	0302251
Z104977	1443167
Z104978	0172225
Z104994	☎
Z105506	0242166
Z20459	0809104
Z20460	0302248
Z20562	0202305
Z20703	0102231
Z20743	0202168
Z20823	0713182
Z21137	0400081
Z21171	0372232
Z21254	0200104
Z21398	0202139
Z21400	0102137
Z21401	0239321
Z21402	0339320
Z21403	0239320
Z21500	0203270
Z21501	0203267
Z22208	0172230
Z22606	1400119
Z22648	0239320
Z22831	0101291
Z23086	0202610
Z23087	0402159
Z23307	1401122
Z23693	0202245
Z23752	0372204
Z24729	0102184
Z24833	0200111
Z25472	0202626
Z25473	0102137
Z25670	0203328
Z26628	0302146
Z26888	0702212
Z27710	0203267
Z28339	0102163
Z28450	0402170
Z28458	0402170
Z28842	0310338
Z28843	0902157
Z29197	0210244
Z29962	0325282
Z30130	0203295
Z30543	0201108

JOHN DEERE

OE	
Z30593	0201108
Z30692	0210129
Z30881	0202320
Z30920	0201333
Z31121	0212267
Z31191	0339320
Z31283	0283314
Z31367	0211256
Z31376	0211256
Z31816	0302251
Z31867	/
Z32041	0301360
Z32158	1201291
Z32173	0225286 EE-TECH
Z32190	0299231
Z32514	0239320
Z32568	0223304
Z32883	0300212
Z33163	0902289
Z33368	0302179
Z33605	0200219
Z33638	0102176
Z33774	1401336
Z33790	0225324 EE-TECH
Z33967	2012282
Z34099	0213259
Z34121	0312267
Z34405	0202230
Z34490	0203294
Z34786	0283330
Z34828	0201108
Z35356	0202310
Z35357	0223515
Z35358	2623278
Z35965	0200204
Z36120	0210244
Z36376	0211256
Z36499	0102257
Z36617	1423394
Z36670	2602304
Z36770	2602304
Z36771	1423396 EE-TECH
Z36813	0209107
Z36949	0203350
Z37148	0172221
Z37191	0283205
Z37192	0283316
Z37473	0213198
Z37476	0224223 EE-TECH
Z37892	0902157
Z38148	0172221
Z38149	0372240
Z38186	0223304
Z38685	0224229 EE-TECH
Z38692	0299245
Z38697	2625326 EE-TECH
Z38698	0202182
Z38699	1901098
Z38700	0323282
Z38702	0172228
Z38703	0172235
Z38704	0283326
Z39312	0203328
Z39313	0203294

OE	
Z39314	0203345
Z39750	/
Z40077	0203295
Z41123	0225334
Z41174	1459199
Z41178	0809104
Z41178K	0809104
Z41478	0215196
Z41563	0224229 EE-TECH
Z41728	0224223 EE-TECH
Z41888	1901115
Z41889	0172253
Z41932	1601120
Z42160	0319400
Z42382	1401110
Z42756	0217140
Z42757	1401110
Z42758	1901115
Z43253	0302134
Z43808	0172253
Z43863	0283250
Z43888	0123325
Z43889	0323377 EE-TECH
Z43890	0224306 EE-TECH
Z44740	0202300
Z44761	0223357
Z44762	0223517
Z44930	0223526
Z44936	0215196
Z45026	0201152
Z45191	0299240
Z45192	0272215
Z45359	0202261
Z45367	0272218
Z45369	0172219
Z45455	0302323
Z45482	1401113
Z46222	0324284
Z46365	0210114
Z46366	0302241
Z46443	1923257 EE-TECH
Z46463	0226328 EE-TECH
Z46464	0226328 EE-TECH
Z46709	0224232 EE-TECH
Z46759	0272218
Z46764	0283324
Z46874	0202275
Z47630	0323281
Z47763	0223561
Z47911	2002179
Z47912	0202182
Z48212	0227315
Z48472	0372203
Z48567	0242338
Z49765	0244521
Z51089	1523417 EE-TECH
Z51202	0223556
Z51212	0257283
Z51485	1903336
Z51707	0323282
Z51708	0323282
Z52009	0372244
Z52909	0203194
Z53233	1472251

OE	
Z53288	0713182
Z53290	0224247 EE-TECH
Z53416	0223572
Z53478	1523568
Z53515	0225266
Z53631	1401137
Z54332	0240348
Z54406	0203350
Z54807	0203238
Z54808	0211205
Z55459	0203188
Z55590	1423408
Z55645	0223572
Z55738	1472273
Z55771	0217176
Z55801	0202348
Z56351	0210183
Z56352	0210207
Z56362	0210207
Z56421	0203155
Z56829	1401204
Z56959	0203218
Z57084	2301174
Z57235	0201328
Z57780	0224380
Z58697	2025401
Z58751	0203245
Z58752	1902354
Z58886	0217116
Z58970	0372199
Z59114	0301211
Z59255	0240348
Z59286	0224406 EE-TECH
Z59287	0324545
Z59322	1902206
Z59342	0223543
Z59344	0203236
Z59419	0206356
Z59503	0123398
Z59504	1423329
Z59556	0702199
Z59557	0202230
Z59930	0223556
Z60135	0201333
Z60578	0399322
Z60930	0227402
Z60931	0227294
Z61150	0227241
Z61151	0227281
Z61152	0227286
Z61153	0227234
Z61154	0211205
Z61164	0227395
Z61822	0210220
Z61827	0227241
Z61857	0240348
Z61858	0225266
Z62110	0210183
Z62111	0210207
Z62113	0210207
Z62211	0211206
Z62213	0203194
Z62214	0203364
Z62215	0206356

OE	Gates
Z62551	0227402
Z62552	0227408
Z62567	0212371
Z62568	0212378
Z63005	0702212
Z63322	0402264
Z63327	0227200
Z64010	1224221
Z64912	0227201
Z65924	0215200
Z66787	0203240
Z66873	0324545
Z67285	0301183
Z67326	1424560
Z69174	1424398 EE-TECH
Z69175	1524411 EE-TECH
Z69619	0242376
Z72830	0201108
Z73506	0285326
Z73879	0702199
Z75245	0285314
Z75246	0285372
Z77222	0285263
Z78830	0227482
Z78831	0227255
Z78832	0227262
Z78833	0227200
Z78834	0301198
Z78860	0242376
Z81937	0202111
ZX64616	0401111
ZY18215	0402170
ZY36201	0125287
ZY38621	0102115
ZY40664	0217116
ZY41123	0225334
ZY42179	1901115
ZY45375	1502315
ZY46304	0102181
ZY46309	0224229 EE-TECH
ZY46570	0422134
ZY46778	0172235
ZY50372	0401111
ZY61290	0201152
ZY66748	0223561
ZY67381	0101169
ZY70028	0257283
ZY70720	1403248
ZY70721	0202230
ZY70724	0402264
ZY70727	0810190
ZY70728	0202348
ZY70733	0213229
ZY71498	1901098
ZY71583	0300212
ZY71606	1403222
ZY72690	1903244
ZY72750	0211362
ZY72911	1902120
ZY72912	0302302
ZY72913	0810190
ZY80518	1401231
ZY94115	0302227
ZY95337	2002365

OE	Gates
ZY96558	0202235
262958	0285337
KEMPER	
LCA72100	2643221
KLEINE	
10600070017	1403325
11801070017	0203295
136811001325	2001143
KPAB	
904009	0323233 EE-TECH
904011	0323273
904020	0223572
904022	1523480
904024	1402469
904028	0301146
904030	1927295
904031	0323519
904032	1927295
904033	0323229
904034	0101158
904035	0301277
904036	0723443
904038	0323544
904040	0101504
904041	0301509
904042	1401175
904043	0301198
904045	1523593
904047	2623599
904051	0727299
KRONE	
921592	0337254
2153350	0337227
2159940	2626724
2168800	0399351
2211880	0372240
2253560	☎
2253610	☎
2266930	0384875
2279090	0384875
2279091	0384875
2279100	0374856
2279101	0374856
2279251	1425254
2282320	0372232
2282321	0372232
2282330	0372240
2282340	0122155
2282350	1472273
2282361	1537238
9215002	1137269
9215010	1118108
9215020	1401147
9215030	1201150
9215040	0325159
9215050	2101138
9215060	0324184
9215070	0326161
9215090	1424162
9215101	0172208
9215102	0172208
9215110	0172230
9215130	1601120
9215140	0325294

OE	Gates
9215150	2625185 EE-TECH
9215151	2625185 EE-TECH
9215160	0825416
9215161	0825416
9215170	1901098
9215181	0372223
9215190	0337309
9215210	0337322
9215221	0337312
9215230	0337309
9215232	0337309
9215240	0325425
9215251	1223167
9215260	0337272
9215290	2601132
9215310	0223201
9215320	2624169
9215330	2023197
9215370	0325453
9215380	0723221 EE-TECH
9215390	1425303
9215410	0172230
9215412	1601103
9215420	0323229
9215460	0137235
9215470	0324158
9215480	1902144
9215520	☎
9215530	0372231
9215540	2023197
9215550	1223167
9215560	0324158
9215570	2624169
9215580	2724161
9215601	1101149
9215610	2642220
9215860	0337254
9215910	0137330
9215920	1337264
9215930	2937224
9215931	2937224
9215940	0337234
9215950	1837245
9215962	0337254
9215970	0337220
9215980	0337215
9215981	0337215
9215990	1937206
9216000	0337281
9216010	2637298
9216030	2354182
9216050	1429187
9216070	0337278
9216110	2329207
9251470	☎
20211640	2684901
200160010	1125260
200208260	☎
200211640	2684901
200216850	☎
200225361	0823205
200229240	0337232
270010100	0884332
270012960	☎

OE	
270015140	☎
270015150	☎
270016220	0884317
270017210	1472238
270022770	1425303
270042650	0384875
270042651	2684887
270048110	☎
270063910	2674868
270073020	2623222 EE-TECH
270095930	1499335
270096890	0372242
270187790	1425186
215335.0	0337227
216880.0	0399351
224037.4	0374856
224041.0	1125260
226693.0	0384875
227909.0	0384875
227909.1	0384875
227910.0	0374856
227925.1	1425254
228234.0	0122155
921500.2	1137269
921501.0	1118108
921502.0	1401147
921503.0	1201150
921504.0	0325159
921505.0	2101138
921506.0	0324184
921507.0	0326161
921509.0	1424162
921510.1	0172208
921510.2	0172208
921511.0	0172230
921513.0	1601120
921514.0	0325294
921515.0	2625185 EE-TECH
921515.1	2625185 EE-TECH
921516.1	0825416
921517.0	1901098
921518.1	0372223
921519.0	0337309
921521.0	0337322
921522.1	0337312
921523.0	0337309
921523.2	0337309
921524.0	0325425
921525.1	1223167
921526.0	0337272
921529.0	2601132
921531.0	0223201
921532.0	2624169
921533.0	2023197
921537.0	0325453
921538.0	0723221 EE-TECH
921539.0	1425303
921541.0	0172230
921541.2	1601103
921542.0	0323229
921547.0	0324158
921548.0	1902144
921552.0	☎
921554.0	2023197

OE	
921555.0	1223167
921556.0	0324158
921557.0	2624169
921558.0	2724161
921560.1	1101149
921586.0	0337254
921591.0	0137330
921592.0	1337264
921593.0	2937224
921593.1	2937224
921594.0	0337234
921595.0	1837245
921597.0	0337220
921598.0	0337215
921598.1	0337215
921599.0	1937206
921600.0	0337281
921601.0	2637298
921603.0	2354182
921605.0	1429187
921607.0	0337278
921611.0	2329207
925147.0	☎
KUHN	
6060826	2787276
6061385	2787298
83101057	1482291
83101066	0372270
83101067	0373264
83101252	1443167
83101253	2743177
83101255	0172206
83101262	1443167
83101263	2743177
83101286	1943273
83101609	0337348
83101656	2787313
83101658	2787298
83101662	2637200
83101670	1437256
83101673	1437256
83101680	2787276
83101681	2787283
83101682	2787284
83101685	0137334
83101687	2787299
83101688	2787300
83101764	2787257
83101769	2787258
83101778	2787276
83101785	0301141
83101788	0301183
83101791	2787380
83101792	2787387
A7252002	1837245
KVERNELAND	
0000939	1401101
37771407	1401180
43301603	1837245
43303407	2787398
43303412	2987290
43303418	1987413
43303420	2787258
43303424	1987301

OE	
43303426	2187361
43303432	2787298
43303434	2087342
99201014	0100083
99201017	0172225
99201040	0100164
99201413	1443151
99201418	0372223
99202013	0301117
99202015	1601103
99202017	1601120
99202022	2001129
99202031	0301147
99202036	0101184
99202038	2001190
99202040	1901188
99202041	0101200
99202062	0101287
99203005	0102108
99203014	0202139
99203018	1602150
99203023	0102161
99203029	1602195
99203038	2902231
99203039	0102231
99203042	0302248
99203050	0202275
99203056	2002298
99203063	0302326
99203090	0102163
99203093	2002237
99203418	1630354
AC494745	2642189
AC690115	0373258
AC690156	2142186
ND9036	2017216
ND9073	2117244
ND9092	0137334
ND9198	1118090
ND9240	1272282
ND9359	0337281
ND9471	0337278
ND96001	0101285
ND96016	0337304
ND96023	0337348
ND96053	0337311
ND96070	2637250
ND96074	0372223
ND96078	0372245
ND96084	2037291
ND96085	0372204
ND96087	1118132
ND96089	0337311
ND96091	0137330
ND96094	0343211
ND96108	1837267
ND96109	0337223
ND9629	0372203
ND9704	2137308
ND9732	2887322
ND9775	2937230
ND9909	1118090
ND9928	2787284
ND9958	2537289

KVERNELAND / LANDINI / LAVERDA

OE	Gates
RG00037276	0373264
LANDINI	
1446203M1	0422134
1446980M1	1472227
1447419M91	0122155
1447592M1	0172225
1447695M91	0372245
2614B542	0173227
425578A2	0122155
700462A1	0372203
701747A1	0372203
705686A1	0285304
706505A1	0372244
706505A2	0372244
706506A1	0172216
706508A1	0372203
706522A1	0172214
710176A1	0342153
710907A1	0172225
714568A1	0785278
714569A1	0285281
LAVERDA	
7108	0422134
311237	1924214
431122	1424276
432232	0201092
432244	0401111
433127	0200082
433128	0200082
433138	0172225
433144	1900106
433157	0200128
433189	0200219
433236	0201092
433281	0201173
433440	0702274
435124	1912180
435125	1912177
435130	0812286
435156	0715190
3413000	1423196
3413010	0324211
4310105	0368227
4310226	1969262
4311115	1423192
4311126	1923287 EE-TECH
4311127	1923287 EE-TECH
4311212	1924192
4311216	1924209
4311218	1424238 EE-TECH
4311221	1424273 EE-TECH
4311222	0324279 EE-TECH
4311310	1925179
4311315	1925277
4311316	1925280
4311318	1925345 EE-TECH
4312351	1424238 EE-TECH
4642578	☎
4813541	0372244
4829321	0399322
4839155	1472238
4855022	0422134
4855024	0173234
4855025	0173234
4855026	0373221
4855027	0372234
4855030	0173225
4858201	0372240
8106679	0173208
8109714	1472238
8822704	1472238
28263119	0157382
28263120	2657330
55087701	0101151
71426178	0372240
98419497	0272218
98419529	0272218
98421323	1699317
98421327	1699317
321346350	CHAIN
321666350	1402469
340312105	0227200
340334417	☎
340431114	0123366
340432232	0201092
340432239	0101099
340432243	0201109
340432244	0401111
340432246	0401111
340432250	1601120
340432433	0202235
340432436	0302251
340432437	0302262
340432438	0202268
340433033	0173217
340433038	1983247
340433041	0173223
340433042	1472236
340433045	0373221
340433109	0172188
340433119	0372204
340433125	0200076
340433126	1272212
340433127	0200082
340433128	0400081
340433129	0100083
340433131	0200085
340433132	0172217
340433133	1400087
340433134	1900089
340433137	1900078
340433138	1900095
340433141	0172237
340433143	0400100
340433144	1900106
340433145	0400108
340433149	1900113
340433151	0200118
340433152	0200110
340433153	0372258
340433154	1472251
340433157	1900132
340433159	0200134
340433162	0200143
340433163	0200143
340433166	1900151
340433174	0372301
340433176	1900174
340433177	1900176
340433179	1943273
340433181	1900196
340433182	1900196
340433183	1900211
340433184	0300202
340433185	0300206
340433188	1900211
340433189	0200219
340433190	1900213
340433191	0300243
340433192	0300206
340433195	0300230
340433197	0200219
340433198	0300225
340433223	2601079
340433233	0201090
340433236	1901094
340433237	0301117
340433238	1901097
340433239	1901098
340433241	1901098
340433242	0201102
340433243	0201102
340433244	0401111
340433246	0201108
340433250	1901115
340433252	1601120
340433253	1601120
340433254	0201123
340433256	1401127
340433257	1401113
340433259	0201112
340433260	0301131
340433262	1901133
340433264	1201153
340433266	2001146
340433268	1401145
340433269	1101149
340433270	2001146
340433271	0101151
340433272	0201155
340433274	0101164
340433275	0301155
340433276	0101159
340433279	0101168
340433281	0201173
340433282	2301174
340433283	0201177
340433284	2301174
340433285	2001178
340433286	0301183
340433289	1901188
340433290	0201191
340433308	0101242
340433311	1401248
340433316	1901283
340433326	0201328
340433357	1903286
340433405	0302134
340433406	0102101
340433407	1902102
340433409	0102112
340433410	1902120

LAVERDA

OE	Gates
340433411	0202126
340433412	1902144
340433413	0102137
340433414	0102137
340433415	0201191
340433416	0402159
340433417	0102148
340433418	2002167
340433419	0202168
340433420	0102181
340433421	0102189
340433422	0102183
340433423	0102184
340433424	0202139
340433425	0702199
340433427	0302219
340433428	1902206
340433430	0302220
340433431	0702225
340433432	0302224
340433433	0202235
340433435	0302251
340433440	0202275
340433441	0202305
340433442	2002323
340433446	0202348
340433449	1919430
340433453	1402474
340433455	0202285
340433456	0302313
340433457	0202361
340433458	0702292
340433465	0102161
340433467	0102161
340433469	2602194
340433470	0402170
340433471	0202245
340433472	0102257
340433473	1902376
340433474	1902354
340433475	0102163
340433476	1402158
340433477	2002228
340433496	2602194
340433531	1103242
340433532	0203240
340433537	1903286
340433539	1903342
340433540	1903346
340433926	1901133
340433961	2002190
340433963	0202209
340433968	2002323
340433970	1905344
340433980	0204153
340433983	1904193
340433984	1904193
340433985	0304339
340433986	0104352
340433988	0104242
340434138	1960189
340434140	1961209
340434150	1910179
340434158	☎

OE	Gates
340434245	1981392
340434247	☎
340434250	1981410
340435100	0112142
340435117	1911159
340435120	0111213
340435124	1912180
340435125	1912177
340435126	1912195
340435127	1912236
340435130	0312284
340435131	0312284
340435132	1812281
340435133	1913165
340435135	1913165
340435138	0214173
340435146	1913184
340435147	1913188
340435148	1913200
340435149	1903155
340435150	1910179
340435151	1410169
340435152	1915192
340435153	0203187
340435154	☎
340435155	0215198
340435156	0715190
340437245	☎
344310105	0368227
344310110	☎
344310113	0768273
344310222	☎
344310225	☎
344310226	1969262
344310227	☎
344310230	0369288
344310237	1969335
344311113	1923180
344311115	1423192
344311117	1423207
344311121	1423214
344311123	1923257 EE-TECH
344311124	1923261 EE-TECH
344311126	1923287 EE-TECH
344311127	1923287 EE-TECH
344311129	1623297 EE-TECH
344311130	1923309 EE-TECH
344311131	1923295 EE-TECH
344311132	0123323
344311134	1923369
344311137	1923387 EE-TECH
344311139	2623412
344311140	1523417 EE-TECH
344311141	0323430
344311143	0323440 EE-TECH
344311147	2023474
344311151	1923499
344311161	☎
344311211	1924192
344311212	1924192
344311213	0124208
344311214	1924195
344311216	1924209
344311217	0224236 EE-TECH

OE	Gates
344311218	2024241 EE-TECH
344311220	1424251
344311221	1424276
344311222	0324279 EE-TECH
344311224	1624318
344311225	1424296
344311226	0224236 EE-TECH
344311227	1924214
344311228	1924209
344311229	0224406 EE-TECH
344311230	2624333 EE-TECH
344311231	1924373
344311232	0724325 EE-TECH
344311233	1924214
344311234	1924446
344311235	1924300
344311237	1924214
344311240	0324211
344311278	1923287 EE-TECH
344311310	1925179
344311311	0225225 EE-TECH
344311312	0325214
344311313	1925398
344311314	1425237
344311315	1925277
344311316	1925280
344311318	1925345 EE-TECH
344311319	1925384 EE-TECH
344311320	0724325 EE-TECH
344311322	1925394 EE-TECH
344311410	1926182
344311418	1926435 EE-TECH
344312105	0227200
344312127	1927295
344312128	1927295
344312129	1927295
344312351	3024240
344351146	0213186
344375130	☎
344375132	CHAIN
344375135	☎
344375223	☎
344411229	1924214
430070105	0172225
430432232	0201092
430432243	0201109
430432244	0401111
430432250	1601120
430432433	2002237
430432437	0302262
430432438	0202268
430433127	0172217
430433128	0172217
430433131	0200086
430433133	1900089
430433134	1900089
430433136	0200090
430433140	1900097
430433143	0400100
430433145	0400108
430433162	0200143
430433182	1900196
430433223	1401081
430433266	2001146

LAVERDA / LELY / LEYLAND / LONG / MACDON / MANITOU / MASSEY FERGUSON

OE	Gates
430433274	1601166
430433281	2301174
430433284	2001178
430433289	1901188
430433406	2502099
430433410	0102123
430433413	0202139
430433417	0302146
430433418	2002167
430433419	1102171
430433420	0102180
430433427	1402217
430433430	0202222
430433431	0202230
430433435	0302251
430433441	1402307
430433442	0302326
430433455	2602287
430433531	1103242
430433963	0202209
430435146	1913184
984909360	1472238
3443111278	1923287 EE-TECH
3443112320	0724325 EE-TECH
328160000K	2002228
340433125K	0200076
340433131K	0200086
340433151K	0200118
340433181K	1900196
340433197K	0200219
340433238K	1901097
340433253K	1601120
340433257K	1901115
340433405K	0302134
340433474K	1902354
340435132K	1812281
340435146K	1913184
340435152K	1915192
344311117K	1423207
344311129K	1623297 EE-TECH
344311132K	0123323
344311139K	2623412
344311140K	1523417 EE-TECH
344311151K	1923499
344311227K	1924214
344311231K	1924373
344311318K	1925345 EE-TECH
344312128K	1927295
LELY	
9107500131	0337304
9107500256	1837267
LEYLAND	
12B1421	0372232
13H3348	1272212
13H4646	0172208
BMK977	0372232
BTJ6280	0201102
LONG	
1405	0273215
MD041704	0173210
MACDON	
4441	1472227
9520	0101298
9530	2002190

OE	Gates
20701	0702263
20721	0301211
21964	0172214
24007	0172225
24371	1424250 EE-TECH
24899	0372232
25856	1472227
26316	0202245
29384	0202245
30548	0799430
30656	0785267
30708	2585303
32360	2601068
34055	0402153
34400	0102231
36012	0202113
36013	1602150
38151	0102250
38735	2601082
38926	0799380
42086	0370380
45959	2670400
101110	0102216
108222	0402264
112826	1901094
114006	0202275
125045	0102216
150763	0371271
152049	1101149
152050	0201177
152051	0301141
163368	0172219
K179511	0173231
K194681	0173217
MANITOU	
229300	2786296
238795	2786299
244237	0172214
244288	0172233
257524	2786296
257525	2786299
269138	0372234
605041	0172225
702974	0172221
MASSEY FERGUSON	
2960	1401306
6906	0372234
6907	1472236
10134	0112152
31295	1402522
55111	2101142
55335	1401306
55354	1272212
55541	0102108
055574	1202193
55665	1402317
56226	0502165
57075	0201124
70001	0102101
0070001	0102101
70016	0102105
0070016	0102105
70040	0102101
0070040	0102101

OE	Gates
70047	1601103
0070047	1601103
70052	0201102
0070052	0201102
70053	0302098
0070053	0302098
70054	0102112
0070054	0102112
70059	1902102
0070059	1902102
70065	0201102
0070065	0201102
70068	1102110
0070068	1102110
70069	0201109
0070069	0201109
70070	0172221
0070070	0172221
70071	2502099
0070071	2502099
70077	0172211
0070077	0172211
70078	0372223
0070078	0372223
70079	0101105
0070079	0101105
70086	0172233
0070086	0172233
70087	0172216
0070087	0172216
70089	0201090
0070089	0201090
70101	0172211
0070101	0172211
70102	0172214
0070102	0172214
70103	0272218
0070103	0272218
70104	0172219
0070104	0172219
70105	0172225
0070105	0172225
70106	0172225
0070106	0172225
70107	0172230
0070107	0172230
70108	0372231
0070108	0372231
70109	0372232
0070109	0372232
70110	0372234
0070110	0372234
70111	1472236
0070111	1472236
70112	1472238
0070112	1472238
70113	0372240
0070113	0372240
70119	1472227
0070119	1472227
70144	1472227
0070144	1472227
70159	1601103
0070159	1601103

MASSEY FERGUSON

OE	Gates
70166	0372232
0070166	0372232
70167	0172219
0070167	0172219
70168	0172208
0070168	0172208
70169	0173234
0070169	0173234
70172	0372223
0070172	0372223
70174	1901098
0070174	1901098
70175	0400065
0070175	0400065
70178	0272247
0070178	0272247
70182	0172208
0070182	0172208
70184	0201092
0070184	0201092
70190	1472238
0070190	1472238
90598	0123153
101233	0273217
101934	0372203
104486	2001146
104774	1101149
105053	0101151
160259	0273217
202045	0372242
226981	1912195
270791	1424209
272633	2002167
302733	1401101
303337	1901188
303520	0302205
303834	1401194
315077	1401110
400875	☎
402607	0102189
410959	0202182
417972	1430213
417995	0111213
418209	0102189
486274	0101184
526155	1425218
526369	0101172
527976	1401194
528089	0323173
528826	0223357
603719	0110126
619327	1424202
621258	1901251
621262	0201092
621321	0112223
621646	0112188
670259	1472227
703899	2012167
708926	0372262
709979	1424251
709980	0224247 EE-TECH
710722	0302220
715398	2602194
716183	2602304

OE	Gates
717893	0302258
719716	1502315
721409	2602288
722622	1402358
732684	0172235
741043	0202300
742033	0702199
742527	0302197
743794	0102148
760615	1402293
762195	0323233 EE-TECH
765173	1423211
765174	2623222 EE-TECH
782835	0112185
783539	0112215
788317	0112166
789853	0310109
790833	0110126
790839	0202332
828012	0268271
834110	0112212
834174	0112170
855684	0368227
856039	1100172
856047	1424218
856088	0102276
856260	0125209
856500	0202245
856567	0172253
856591	0200107
857011	0173211
916854	1401304
1111887	1819202
01141615	1527332
1170653	0373251
1175765	0173253
1603701	1623297 EE-TECH
1615254	0202320
1615333	0302368
1616714	0812233
1616715	0112166
1724154	0502215
2020951	0385270
2231579	0373225
2235056	0173249
2235178	0173247
2235256	0173247
2235531	0173232
2235532	1573238
2612005	0173189
2612007	0173192
2612015	0173210
2612016	0173210
2612017	0173212
2612018	0173214
2612019	0173216
2612020	0173216
2612021	0173217
2612022	0173219
2612023	0373221
2612024	0173222
2612025	0173224
2612028	0173227
2612029	0173225

OE	Gates
2612030	0173231
2612031	0173232
2612033	0173235
2612062	0173218
2612065	0173225
2612067	0173234
2612068	0173235
2612069	0173232
2612073	0173245
2612074	0173245
2612075	0173247
2612076	0173247
2612078	0173249
2612080	0173253
2612083	0173257
2612105	0173213
2612153	0173213
2612160	0173224
2612208	0372203
2612214	0272215
2612223	0372231
2612229	0372242
2612289	0172225
2612305	0173195
2612317	0173213
2612319	0173216
2612354	0172192
2612374	0372231
2612375	0372234
2612379	1472236
2612381	1472238
2612383	0372240
2612404	0172208
2612405	0172211
2612406	0172211
2612407	0172214
2612408	0172214
2612412	0272218
2612413	0172219
2612414	0172219
2612416	0172221
2612417	0372223
2612419	0172225
2612420	1472227
2612421	0172228
2612422	0172230
2612423	0372231
2612424	0372232
2612426	0372232
2612428	0372234
2612429	1472236
2612430	0172237
2612431	1472238
2612432	0372240
2612437	0372242
2612439	0372242
2612440	0372245
2612441	0272247
2612447	1472251
2612450	0172253
2612457	0372262
2612460	0172225
2612462	1472227
2612464	0372232

MASSEY FERGUSON

OE	Gates
2612465	0372234
2612466	1472236
2612467	0172237
2612468	1472238
2612469	0372232
2612470	0372231
2612474	0372242
2612475	0172228
2612476	0372242
2612477	0372245
2612478	0272247
2612481	0122155
2612485	0172253
2612533	1601103
2612629	1401081
2612630	0101088
2612631	0201090
2612632	0201102
2612827	0173224
2612868	0372232
2612872	1472238
2612884	0272247
2612949	0372242
2614002	0173195
2614017	0173216
2614018	0173216
2614029	0173227
2614031	0173225
2614079	0173227
2614080	0273228
2614087	0173234
2614089	1573242
2614095	0173247
2614428	0173235
2614547	0172228
2614550	0372231
2614552	0372232
2614555	0172235
2614556	1472236
2614567	0372245
2614645	0172225
2614655	0172235
2614656	1472236
2614667	0372245
2614668	0272247
2614669	0272247
2614670	0122155
3043153	2609122
3043154	0109116
3289470	1985296
3370141	1923180
3371800	1912177
3903098	2485285
3903099	0785278
3911559	0785278
3911563	0185275
3911575	0285271
3911578	0785285
3911579	0385289
3911580	0285291
4624737	0173223
6154847	0172225
6159053	0227290
6627917	0172219

OE	Gates
6659247	0172219
6659248	0372262
7530080	0202517
7530250	2002283
7530490	0202361
7531090	0102415
7532720	0723221 EE-TECH
7532730	0202182
7855315	0201215
7855414	2825189
7855513	1300104
7855646	0102276
7855687	1501181
8338742	0124258
9810110	0112188
9810650	0301339
9810810	0302248
9811190	1402217
9811480	1401216
9811490	1401129
9811683	1472238
9811710	0101291
9811740	1401220
26732797	1537326
26732815	0324377
26732820	1527171
26732833	1402363
26732883	1524289
26732992	0172220
26733247	2001129
26733248	1401241
26733312	0714187
26733312	1514187
26733578	0101187
26733588	0301217
26733596	0301155
26735939	1923287 EE-TECH
26746958	1524207
26746968	0224247 EE-TECH
26746970	2901252
26746971	1401499
26746972	1402412
26746973	1525431
26746995	2124287
26746996	0210149
26746997	0210144
26746998	0215198
26749057	0326432
28263409	0140276
28284841	1402317
28786813	0272247
41900000	0173253
41903400	0172195
41904300	0272218
41931100	0201173
41937800	1401231
41955500	0202261
41973400	☎
41978300	0126271 EE-TECH
41981700	0202285
41982000	2002190
41982300	0102181
41985700	0202245
41990021	0422134

OE	Gates
41990065	2625318
41997900	☎
42325600	☎
42327300	☎
42328100	☎
42328200	☎
42328400	☎
42329000	☎
42329200	Chain
42329300	Chain
42329400	☎
42329600	☎
42332800	Chain
42333300	☎
49030006	1523480
49030007	0227294
49030015	0173240
49030016	0373225
49906200	0172233
70227471	1472227
70229559	0172221
70233489	0272215
70233490	0272215
70240595	0372245
70261802	0372240
70268485	1472236
70502436	0201328
70506910	1527332
70518656	0203201
70519007	2002253
70523202	0101242
70525596	0101227
70527095	0212267
70539207	0203210
70539685	0304255
70541718	0202285
70543900	0201177
70562203	0172219
70577921	0101311
70582090	0111213
70582884	0372240
70802171	0102108
70803587	2502099
70805120	0302097
71116054	0101399
71116055	2501308
71116423	0112188
71118003	2002283
71125976	0302146
71127198	0201343
71129986	0102276
71130178	0302224
71130442	1602150
71131237	1402451
71131774	0172216
71135970	2612258
71139622	1402140
71140810	0112212
71140992	0301339
71146271	1423274
71146659	0809104
71146713	0172253
71146744	0123224
71147547	1423188

MASSEY FERGUSON

OE	Gates
71148120	0372232
71152788	1472227
71157414	0812262
71160836	1401412
71161595	0323238
71161596	1523259
71164177	1923295 EE-TECH
71164350	2012282
71167114	1113237
71167409	0123323
71170490	1912195
71170690	0223318
71172514	0312241
71175575	1423207
71175686	0372258
71175687	1472251
71177597	1902204
71177795	☎
71186454	1472264
71187779	1602150
71188075	1401220
71188635	0723264 EE-TECH
71189170	0723353
71190749	0300243
71190750	1400227
71192282	0102176
71193420	0372240
71194116	0202305
71197876	0812286
71197999	0324261 EE-TECH
71300867	1402373
71300996	0312277
71301859	1401275
71302482	0372231
71305994	2002237
71306200	0372268
71308584	0301375
71309140	0323175
71310380	0702225
71310381	1125260
71310382	0224292 EE-TECH
71312339	0300206
71313804	0201161
71316263	0201333
71316268	0212312
71317254	0372257
71318378	0112200
71320449	☎
71322828	1602254
71322834	2602244
71323444	☎
71324294	0702263
71324690	2002237
71325150	0101245
71325847	0202230
71326253	0301360
71329608	0302220
71330756	0323313
71333673	2602194
71334659	1902206
71334919	1401260
71335475	1402355
71335788	☎
71336137	0372260

OE	Gates
71336199	0102174
71336307	0272247
71337000	0101184
71339768	0202209
71339772	0302281
71339886	0202168
71340653	0201173
71342214	1423267
71344423	1423301 EE-TECH
71345785	0200125
71345800	0302336
71346200	1900123
71347560	0701418
71347561	0201258
71348772	2604217
71348999	2824496
71351260	0724423
71352139	0172217
71352142	0172219
71352729	0372242
71354198	0202305
71354210	2902164
71355170	1401412
71355232	0123323
71356409	1902206
71358134	1601166
71358255	1623311 EE-TECH
71358487	2602213
71359598	0102250
71359681	2301174
71363595	0324299
71363793	0323225 EE-TECH
71363802	1424313
71363804	0124456
71363805	1425459
71364077	☎
71364154	0323374 EE-TECH
71364155	2002342
71364208	0302345
71364514	0201333
71364912	☎
71364922	0102163
71366207	☎
71366276	0202348
71367191	0172225
71367459	0102180
71367460	0205207
71367469	0723228 EE-TECH
71368072	0323233 EE-TECH
71368135	0325441
71368809	1902351
71369747	1472227
71370214	1425459
71370279	0325442
71371616	0785284
71371714	0702272
71372945	0372244
71372946	0285251
71373258	0323281
71373259	1424282
71374276	0324284
71374277	0323282
71374305	0168239
71374306	0302345

OE	Gates
71375178	0323374 EE-TECH
71377787	0327346
71379105	0757517
71379124	0757502
71379782	0324377
71379787	0168253
71379932	1402547
71380601	2623222 EE-TECH
71380653	0123339
71380654	0101321
71380655	0102174
71380657	0323183
71381951	2823241 EE-TECH
71381952	0223204
71381955	0202275
71382504	2623222 EE-TECH
71382717	0302425
71382718	0102419
71382869	2602445
71385693	1424282
71385801	0304214
71385837	0302262
71386352	2024376
71386677	1900176
71386695	0302258
71386852	0100186
71387775	0224306 EE-TECH
71388216	1425378 EE-TECH
71388712	0102406
71390120	1425218
71390188	1524314 EE-TECH
71390199	0323233 EE-TECH
71390209	1424219
71390210	1425218
71390561	0323219
71390885	☎
71390886	☎
71394979	0101151
71395108	0101151
71396569	0125219
71396754	1900132
71398366	2902164
71398384	0127308
71398388	1402373
71399505	0313321
71399514	☎
71399519	0144386
71399562	1424313
71399607	0200124
71400662	0109227
71403685	0302248
71403721	0325367 EE-TECH
71406285	0125244
71406286	0124231
71406338	0123305
71406339	0323448
71406361	1423301 EE-TECH
71406620	1224221
71407328	Chain
71407841	0285343
71410765	1923287 EE-TECH
71410767	1623311 EE-TECH
71410789	Chain
71414420	0202245

MASSEY FERGUSON

OE	Gates
71418976	1425218
71418977	1424219
71418978	1224221
71418984	0125219
71419420	Chain
71423444	1413320
71424226	2823345 EE-TECH
71424227	2623361
71426450	0223204
71427254	1902351
71427255	1402373
71427340	☎
71430816	0124502
71432802	1423329
71444306	0423318 EE-TECH
71444743	☎
71444986	0342200
71448508	0227315
71449019	Chain
72028727	0200219
72074320	0372231
72091544	0373221
72099473	0172219
72108678	0101168
72120232	1401306
72501439	0372240
72514707	0285280
72514850	0285280
72515518	0285273
72515591	0385289
72525946	0372268
72526174	0168325
74321275	1472264
74510744	0172225
80422441	0300206
87041732	0702225
90070001	0173234
90070003	0173227
90070004	0173217
90070005	0173232
90070008	0173216
90070009	0272218
90070013	1573238
90070017	0173224
90070019	1473236
90070020	0172219
200009089	0272247
303075079	0422134
303077284	1272212
303079473	0173210
303143589	0172208
303155102	1472238
303302857	0372240
303315134	1272212
303354288	0272247
303387585	0372272
303390144	0172221
303467767	0185275
303469220	0785278
311566290	0223304
311567900	1401204
311587310	0112200
311589740	1401209
311594230	0324344

OE	Gates
311594240	2624278
311607690	0372255
311669790	2425208
311679050	1923369
311680230	1401442
311695680	0724370 EE-TECH
311710550	0372244
311730870	2103333
311744270	1402340
311774180	1472236
311779320	1524207
311779580	0123343
311809650	0372203
312403270	☎
312404170	0325248
312414670	0422134
312439700	0302326
312448930	2600155
312449290	1600168
312449520	0125211
312492070	1901133
312498110	0372223
312523670	1824417
312543960	2101138
312604010	1401137
317535030	1402474
317535040	0702295
340433251	1601120
684101050	0173214
684101150	0173223
684101175	0372223
684101225	0273228
684101238	0173225
684101350	1573238
684120918	0372204
684120925	0372204
684120992	0172208
684121050	1472251
684121125	0272218
684121300	0372232
684121325	0372234
684121575	0172253
685081680	0785285
685081710	0785288
685081895	0285301
685121530	0189280
700707578	0200110
700708531	0372203
700708547	0785284
700709489	0200140
700710289	2002211
700713435	0372234
700715554	0385289
700718108	0200089
836007765	0101088
971180069	0172230
971180078	0172216
5136710400	1272212
62136710070	0272210
112346446500	2002228
112366410100	0402170
112366410200	0902157
113037510000	0402437
117002018500	0400065

OE	Gates
117029010800	0400108
117029011000	0400100
117502518400	0300202
117502518500	0400081
117502527900	1100049
117502616000	0100083
117512510400	0240359
117522513800	0402155
117537010100	1430231
117537510400	0330336
117537513400	0423318 EE-TECH
650203010870	2385277
850009990188	0502215
850009990198	0272218
021078T1	0372268
026160T1	0272247
026161T1	0272247
0304950M91	0372245
034699T1	0372262
034948T1	0372262
035031T1	0372255
036720T1	0372255
038355T1	0372275
038356T1	0172201
038357T1	1400216
038580T1	1424219
039229T1	2002253
039630T1	0423458
039631T1	0123224
040560T1	0172237
048391T1	0102183
048392T1	2002237
049798T1	0172230
049880T1	1472238
050068T1	0302200
053315T1	1573242
053640T1	0213186
053650T1	0173244
053928T1	0502215
054269T1	0372242
054315T1	1573242
054607T1	0272218
056148T1	0173223
056149T1	0272247
056150T1	0173195
058147P1	0200073
059105T1	2625326 EE-TECH
059106T1	0812286
059169R1	0172206
060794P1	0142192
060795P1	0200146
062805T1	0812233
063211T1	2623194
063212T1	0323254 EE-TECH
063971T1	0302179
064430T1	0812202
064431T1	0812262
064441T1	0112182
065188T1	1123251
065881T1	0102125
068154T1	0323273
068918T1	0123252
069361T1	0213197
069999T1	0173249

MASSEY FERGUSON

OE	Gates
070460T1	0173247
070461T1	0173249
072727T1	1472236
101102M1	0123325
1012455M1	0101151
1012557M1	1699317
1015003M1	0101430
1032843M1	1900136
1033078M1	1402412
103319M1	2002237
103320M1	0102406
1035690M1	0200118
1037585M1	1472238
104072W1	0157530
1041614M1	0300137
1041659M2	1901283
104179W1	1424209
104180W1	1424282
104259W1	1900097
1047702M1	0302240
1051235M1	0102673
1056409M1	☎
1056423M1	☎
105654W1	0325365 EE-TECH
1056877M1	☎
1056914M1	0302205
1057017M1	☎
1071847M1	☎
1076753M1	1885281
1080195M91	0172216
108190W1	0124456
111677W1	0785284
111954W1	0757263
1175-125-104.00	0240359
1347358C1	0323233 EE-TECH
137591M1	0373225
140114M1	0101357
140235M1	1401384
140259M1	1901115
140260M1	0201108
1407123R1	0110162
1408761R1	0101287
1408840R1	0705245
141485M1	0401279
141514M1	0101357
141654M1	2301262
141829M1	0202442
141883M1	1900136
141899M1	1302540
141943M1	0701268
142218M1	1901283
142416M1	0101291
142566M1	0202141
1434208M1	1400115
1435868M1	0401111
1443920X1	0172206
1443921X1	0172195
1443922X1	0172216
1443923X91	0372231
1443924X91	0172225
1443925X91	0372232
1443926X91	0372234
1443927X91	0372242
1443928X91	0372223

OE	Gates
1443929X91	0172219
1445437M1	0118122
1446046M1	0273228
1446201M1	0372232
1446888M1	1573242
1446925M91	0173227
1447154M1	0172228
144720M1	1601185
144721M1	0101493
1447317M1	1472238
1447405M91	0173234
1447407M91	1472236
1447414M91	1573242
1447418M91	0272247
1447695M1	0372245
1447773M91	0173227
1447778M91	1472238
1447784M91	0372223
1480826M1	1601120
1482511M2	0372234
1483201M1	0101107
1483277M1	1401248
1483880M1	0102112
1483881M1	0102184
1483882M1	0102129
1483883M1	1630274
1483884M1	0102231
1506373M1	1901094
151134M3	1902206
151335M1	2600117
151812M1	2501076
152259M1	0302200
154097M1	0384340
156422A	0272247
1594240W1	1424276
1603701M1	1623297 EE-TECH
1604055M1	0902122
1604055M2	0202126
1604401M1	0101285
160440M1	0101285
1604464M1	0172233
1604524M1	0372232
1612892M91	0173244
1613267M1	0172253
1613293M1	1573238
1614371M1	0372223
1614372M1	☎
1614629M91	0372257
1615254M1	0202320
1615333M1	0702295
1615715M1	0112166
1615962M1	0302313
1616040M1	0112166
1616041M1	0812233
1616345M1	0812233
1616346M1	0112166
1616348M1	0812233
1616447M1	0101099
1616477M1	0101099
1616714M1	0812233
1616715M1	0112166
161715M1	0112166
1617331M1	0100160
1617332M1	0100057

OE	Gates
1617448M1	1900095
1621182M1	0273217
1621201M1	0273217
1628951M1	2002342
1628959M1	0124297
1630361M1	0173222
1632646M1	0172188
1637680M1	0173205
1638339M1	0173205
1640971M91	0101168
1642173M1	0100189
1642204M1	0101184
1650254M1	2502099
166422A	0372245
1669570W1	1424187
1669923M1	0372240
1680230W1	1401442
1680230WI	1401442
168023W1	☎
1680323WI	☎
168121M91	0102112
168122M91	1902102
1682680M1	0372232
1682684M1	1472227
1682684M2	1472227
1686614M91	0173240
1686615M91	0173249
1686616M91	0372223
1686837M1	0272218
1686883M1	0272218
1687531M1	0372234
1687531M91	☎
1687610M91	0173249
1688216M91	0372242
1688988M1	0172214
1690692M1	0172214
1691764M1	0372223
1692490M1	0372240
1693745M1	0272247
1693746M1	0372223
1695146M1	0372244
1700120M1	2383223
1700818M1	0173205
170120M1	0173205
1711190M1	0202310
1718508M1	1600168
1718508M91	1600168
1719000M1	0302302
1720205M2	0324299
1720205M3	0724340 EE-TECH
1720255M1	0124297
1720488M1	0202230
1720647M1	0201109
1720674M1	0202235
1720674M2	0201109
1721350M1	0402170
1721398M1	0202209
1721710M1	1901098
1721876M1	0130307
1722835M1	0102161
1722836M1	0310109
1722880M1	2901237
1722939M1	1401314
1724154M1	0202209

MASSEY FERGUSON

OE	Gates
1730033M91	1472264
1730034M91	0372257
1730035M91	0173212
1730036M91	0372260
1730366M1	0102636
1730367M1	0102663
1730687M1	1402336
1730781M1	1602396
1730782M1	0302326
1730976M1	0102464
1731014M1	1402217
1731015M1	0102257
1731023M1	0402264
1731535M1	0200086
1764410W1	1272282
178019C1	0302197
1781280W1	☎
178128W1	☎
1803440M1	0272247
1809095M2	0272247
1810382M91	0201090
1810543M91	0201097
181359C1	2002298
181523M1	0272218
1821573M1	1900097
1821773M1	1401081
184526M1	0172219
184586M1	1573238
1851748M1	0372223
1851749M1	0372223
1851751M1	0372223
185223M1	1472236
1852966M1	1472236
1855008M1	1602150
186750M1	0130307
186750M2	0130307
186976M1	0422134
1874973M1	0172230
1875956M1	0372242
1876670M1	0172233
1878296M2	0372223
1880146M1	0402170
188213C1	2602244
188213C3	0202245
1887533M1	0104428
189789M1	0172228
190083M1	0372232
190823M1	0172225
192360C1	0102489
193923C4	0714185
195432M1	0202209
195433M1	2602194
195671M1	0201177
195672M1	0702199
200432M1	1902204
200557M1	0101200
201900M1	0302251
202242M2	1401127
202691M1	0102276
202726M3	0112142
203437M1	0201096
204084M1	1401208
204095M1	0101230
205235M1	0112170

OE	Gates
205609M1	0112170
206020M1	0702212
206021M1	0102231
206897M3	0302098
210615M1	1401180
210627M1	0101169
210635M1	0402153
210716M1	1901115
210774M1	1202193
210775M1	0102216
210810M1	1601103
211666M1	0102184
213850M1	0201177
216286M1	0302224
216897M1	0300137
221697M2	0101172
222347M1	0101158
222882M2	0501121
222917M1	0217106
226848M1	0112170
226981M1	1912195
227455M1	0102250
227455 1	0102250
227457M1	1602150
227813M1	☎
227976M1	1601103
227978M1	0185284
227984M1	0102282
227986M1	0201343
227986M2	0201343
228113M1	1901115
228147M91	2902231
228542M1	0100315
228722M1	1601103
228813M1	1902120
228813M3	1902120
228997M1	☎
228999M1	2001143
229096M1	0101311
229097M1	2301174
229287M1	0100312
229288M2	0100308
229863M1	2012167
230092M2	2012169
230097M1	1912180
230097M2	1912180
230350M1	1472238
230356M1	0185308
230356M2	0185308
230380M1	0102112
230381M1	0102108
230556M4	☎
232508M1	0102105
232511M2	1912177
232521M1	0101184
233124M1	0112212
233213M2	☎
233950M1	0101099
236670M1	0372242
236958M1	0372240
236959M1	0422134
2403270W1	0273217
2404170W1	1425243 EE-TECH
240447M1	☎

OE	Gates
240575M2	0101099
2439700W1	0302326
2439710W1	1423290
2439720W1	2209296
2445370W1	1513221
2449520W1	2625212
244952M1	0325214
2492070W1	1824417
2496110W1	0323437 EE-TECH
2523670W1	1824417
2543650W1	0302240
2543960W1	☎
2543970W1	0301118
2553480W1	1602150
259047M91	0168255
2593000W1	0323233 EE-TECH
2612330W1	0709210
2614A015	0173195
2614A028	0173206
2614A036	0273215
2614A037	0173216
2614A044	0173222
2614A049	0173227
2614A050	0273228
2614A051	0173225
2614A053	0173231
2614A057	0173234
2614A065	1573242
2614A071	0173247
2614A108	0173189
2614A111	0173192
2614A129	0173210
2614A131	0173210
2614A139	0173217
2614A150	0273228
2614A151	0173225
2614A152	0173230
2614A153	0173231
2614A157	0173234
2614A158	0173234
2614A165	1573242
2614A171	0173247
2614A173	0173249
2614A178	0173253
2614B027	0172208
2614B039	0172221
2614B045	0172225
2614B050	0372231
2614B052	0372232
2614B055	0172235
2614B056	1472236
2614B059	1472238
2614B060	0372240
2614B067	0372245
2614B073	0172253
2614B127	0172208
2614B135	0172217
2614B137	0172219
2614B139	0172221
2614B145	0172225
2614B155	0172235
2614B156	1472236
2614B157	0172237
2614B160	0372240

MASSEY FERGUSON

OE	Gates
2614B167	0372245
2614B168	0272247
2614B169	0272247
2614B170	0122155
2614B173	0172253
2614B178	0372257
2614B185	0372262
2614B650	0372231
2614B657	0172237
2614C145	0101087
2614C148	0201090
2619760W1	1901133
2621170W1	0124456
2624080W1	0400100
2624390W1	0324377
2634420W1	0285273
265522M91	0200128
265522 91	0200128
26714B029	0172211
2674B152	☎
268847M91	1424250 EE-TECH
2716309M1	0401111
2716310M1	1473236
2716311M1	0173245
2717339M1	0173214
2717340M1	0501121
2718177M1	1400072
2727160M2	1424212
273757M91	0301301
273837M91	0372244
2740015M1	0172192
274015M91	0201177
274252M91	0372245
274339M91	2600124
2800674M2	0372231
280071M1	☎
2801859M1	0372242
281560M1	0201177
281560M91	0201177
2821764M1	1472238
2826795M1	1401161
2827362M3	0227281
2833629M1	1530311
2833904M1	0112182
2833904M2	0112182
2833904M3	0112182
2834465M1	0501121
2834466M1	0401111
2834612M1	0125349
2835234M1	1401113
2837791M1	1601218
2839975M1	0300137
2839978M1	0300137
284632M91	0200128
284633M91	0223515
2863984M1	0172237
2874008M91	0372232
2874009M91	0173212
288-1607	☎
2960035M1	0173227
2960036M1	0172219
29622221M91	0173216
2967502M1	0172216
2967567M1	0372234

OE	Gates
2967952M1	0173232
2967954M1	0172221
3000464X1	0173232
3001104X1	0173234
3001105X1	0272215
3002544X1	0173212
3002546X1	0173216
3002547X1	0372232
3002548X1	0173223
3002549X1	0373221
3002550M1	0173227
3002550X1	0173227
3002552X1	0372231
3002553X1	0372223
3002557X1	0372242
3002560X1	1699317
3002561X1	0372262
3002562X1	0173234
3002565X1	0173217
3002566X1	0272218
3002567X1	0172219
3002568X1	0172221
3002569X1	1472251
3002570X1	0372203
3002571X1	0372204
3002572X1	0372255
3002573X1	0372240
3002577X1	1472236
3002578X1	0372245
3002581X1	0372234
3002582X1	0172230
3002584X1	0373225
3002585X1	0422134
3002586X91	0372232
3002588X91	0372223
3002590X91	0173216
3002591X91	0372232
3002592X91	0372231
3002593X91	0372231
3004761X91	0422134
3007513X1	1472236
3007513X91	1472236
3007718X1	0372255
3007736X91	0172208
3021192M1	1400181
3021251M1	0100164
3021313M3	2600124
3021352M91	0172217
3021353M92	0200073
3021546M1	0173205
3028521V	0188231
3034474M1	0302251
3035568M2	0168376
3036278M1	0372223
3036551M1	0724325 EE-TECH
3038999M1	1472238
3040366M1	0172211
3040949M1	0372245
3040950M91	0372245
3040951M1	0372245
3040966M1	0172211
3041017M1	0172208
3041624M1	1601205
3042011M1	1601205

OE	Gates
3042012M1	0201108
3043153M1	0109121
3043154M1	0109116
3045111M1	0272247
3045111M91	0272247
3049010M91	0172228
3049776M1	1402140
3050742M1	2602213
3052209M1	0272247
3057173M1	0100141
30653-380	0213197
3066060M8	1472251
3089212M1	0812261
3098153M1	0125296
3098211M2	0812262
3098212M1	☎
3098212M2	0812202
3098812M1	1402532
3099082M1	0101321
3099829M1	0125299
3101337M1	0301155
3106033M1	0372242
31-1594240	2624278
31-2403270	☎
31-2404170	0325248
31-2414670	0422134
31-2439700	0302326
31-2439720	☎
31-2445370	☎
31-2448930	2600155
31-2449290	1600168
31-2449520	0125211
31-2492070	1901133
31-2496110	☎
31-249710	☎
31-2498110	0372223
31-253670	☎
31-2543960	2101138
31-2543970	☎
31-2553480	☎
31-2604010	1401137
31-2605020	☎
3145135M91	0122155
3145238M1	0122155
3148053M91	0372234
3156220R92	0112175
3156221R92	0112189
3158811R1	0105250
3170530M1	2602457
3170531M1	0202361
3172001M1	0102419
3173304M1	0102411
3175109M1	0102328
3175160M1	0102464
3175529M1	☎
3193693M2	0173219
320496M3	0139242
320551M1	0160312
320593M2	2604348
320595M1	0102112
320595M2	0102112
320596M1	1901133
320623M1	0301183
320623M2	0301183

MASSEY FERGUSON

OE	Gates
320995M1	0102112
321034M3	1401231
321259M1	0101399
3226971M1	0113191
3226971M2	0113191
3226972M1	1413193
3226972M2	2013171
322768M1	0102108
322788M1	1102110
323594M1	1601185
324872M1	0101105
326473M1	0202610
326586M1	0101468
326586M2	0101468
326586M3	0101468
326753M1	0101681
326754M1	1302669
326875M1	0102683
3280157M1	1272212
328030M1	1902204
3281495M1	0172206
3284081M1	0372204
328656M1	2330562
328681M1	2330592
3287276M2	0301360
328978M1	0102176
33145A	0101087
3315232M1	1401272
3315896M1	☎
3315897M1	0101242
3316647M1	0302258
3319791M1	0172211
3320327M1	0172211
3324169M1	1472227
332768M1	1102110
33365A	1401081
3370141M1	1923180
337014M1	1923180
3371171M2	2002167
3371437M1	0201155
3371437M2	0201155
3371438M1	0102461
3371643M1	0102489
3371692M1	1402363
3371800M1	1912177
3371800M2	1912177
3372217M1	0372223
3373171M2	2002167
3381364M1	0122155
3381364M91	0122155
3383044M91	0173240
3383691F1	1272212
3386190M91	0372245
3386214M1	0172221
3389525M1	0172217
3389542M91	0372255
34042011M1	1601205
3412285M2	0372255
34488A	0201090
3465729M1	1601349
35124A	0101088
3547732M1	0372245
3547886M1	0272247
3581286M1	0172253

OE	Gates
3581611M1	1472238
3581635M1	1472251
3582951M1	0272218
3582952M1	0172225
3582953M91	0372253
3590943M1	0101107
3590944M1	0201108
3595070M91	0172225
3612115M1	0172225
3612930M1	0372204
3614706M92	0122155
3614715M1	0172221
3614715M2	0172221
3616512M91	1472251
3617176M91	1472251
3617178M91	0172253
3617180M91	0372245
3617184M91	0272247
3619084M91	0372244
3619356M91	1573242
3619358M91	0372240
3632008M2	0372258
3633190M3	0422134
3637306M91	0372232
3637595M1	0372223
3637597M1	1472227
3637598M91	0372231
3637978M91	0172228
3639095M1	0302098
3639097M1	0172211
3639673M1	0173235
3639674M1	0173247
3639676M1	0172208
3639680M1	0172214
3639681M1	0172217
3639682M1	0272218
3639683M1	0172225
3639684M1	0172230
3639685M1	0372232
3639687M1	0172235
3639688M1	0172237
3639689M1	0372240
3639690M1	0372242
3639692M1	0272247
3639693M1	0101087
3639694M1	0201090
3640426M1	0273215
3640427M1	0173216
3640428M1	0373221
3640430M1	0173232
3640432M1	0172219
3640456M1	0173212
3640457M1	0173213
3640458M1	0173214
3640459M1	0173222
3640460M1	0173225
3640463M1	0173245
3640464M1	0173257
3640465M1	0372203
3640467M1	1472227
3640468M1	1472251
3640471M1	1472238
3640472M1	0372242
3640473M1	0372245

OE	Gates
3641141M1	0172219
3641142M1	0173234
3641412M1	0173234
3648900M1	0422134
3650461M1	0173230
3654924M1	0272218
3656430M1	0172225
3656692M1	0172219
3656765M1	0372253
3659864M1	0172225
3661438M1	1272212
3667988M1	0372240
3669118M1	0372232
3671158M2	0372244
3671159M1	0372240
3674237M1	1472236
3674243M1	0372232
3676567M1	1472251
3677935M1	0372234
3682478M1	0172216
3700656M1	0172208
3712531M1	1272212
3712532M1	0172216
3714894M1	0172225
3777379M91	1472251
3777681M91	0172235
3777682M1	0372232
3778975M2	0372204
3779379M91	0372242
3780061M91	0272247
3780138M91	0372240
3780140M1	0372240
3780141M1	0372242
3780602M1	0272247
3780603M91	0372232
3780604M91	0372232
3780605M91	0372234
3780606M91	0372242
3780607M91	1472238
3780608M91	0372242
3780609M1	0372232
3780610M1	0372232
3780611M1	0372232
3780612M1	0372240
3780613M1	0372240
3780616M91	1472236
3780617M1	1472236
3780645M91	0372242
3780908M91	0372245
3787792M1	0342160
3789028M1	1472238
3808704M1	0372240
3808705M1	1573242
3808730M1	0372242
3809174M1	0172211
3809175M1	0372223
3810420M1	0173232
3815255M2	0372240
3815256M1	0372232
3815257M1	0372234
3817582M1	1472238
393610X1	0400081
3939671M1	0173218
401109M1	0111241

MASSEY FERGUSON

OE	
401110M1	0111210
401753M2	0101372
401753M3	0101372
402177M1	0401111
402188M1	0101088
402354M1	1602150
402603M1	1901251
402604M1	1901098
402604M2	0101099
402605M1	0201155
402606M1	1902204
402607M1	1202193
402608M2	☎
402608M3	1439317
403041M1	0701095
403071M1	0101156
403071M2	0101156
403408D	0102231
403677M1	1202193
405926M1	1501475
405928M1	1501475
406256M1	0372260
406562M1	1402609
406681M1	0202442
406768M1	1402433
406852M1	0702225
406870M1	1402217
406888M1	0202172
406895M1	2002211
407189M91	1472264
407218M1	0119379
407692M1	1601218
407928M1	0173211
408151M1	1472264
408152M1	0372257
408631M1	0372260
409298M1	0173212
410195M1	☎
410617M1	☎
410647M1	0104397
410919M1	0302219
410956M1	1402127
410957M1	0302136
410958M1	0102129
410959M1	0102184
411020M1	2601079
411125M1	0373264
411216M1	0203240
411218M1	2610252
412074M1	0301117
412236M1	0302224
412237M1	1430213
412333M1	0111241
412399M1	0302136
413122M2	0139325
414316M1	0102181
414324M1	0201090
416603M1	1902206
416808M1	0210149
416809M1	0110199
417441M1	0112188
417441M2	0112188
417468M1	0201108
417660M1	0101245

OE	
417795M1	0201170
417797M1	0101099
417822M1	0110142
417972M1	1430213
417974M1	0502215
417995M1	0111213
418192M1	0102125
418209M1	0302134
418232M1	0139325
418900M1	0101099
4189192M1	0102123
41990007X	1523177
4223957M91	0172253
4271806M1	0342161
4272496M1	0372231
4273187M1	2785290
4273188M1	0285291
4273269M1	0187250
4273270M1	0187251
4274241M1	0187251
4274692M91	0372242
4274693M91	0372244
4275185M91	1272212
4275520M1	0285303
4275545M3	0289312
4275784M1	0342160
4275919M1	1485304
4278354M91	1472251
4281725M1	1984281
4282010M1	0186270
4282444M1	1472251
4284981M1	1985296
4285560M3	1585280
4286263M1	0184260
4287376M2	0184270
4288688M1	2689310
4348738M1	0289319
4350583M1	☎
4375174M1	☎
487802M2	0422134
489734M2	0185340
500251D1	0285317
500252D1	0285314
500685D1	0185340
5015577M1	0372244
5016260M1	1272212
503727M1	0372244
505995M2	0172220
508560M1	0172206
508588M2	0372197
509572M1	0172217
511275M1	1900196
511277M3	1900095
511485M1	0372245
5115483M1	1472251
512431M1	0372245
512747M1	1472236
512951M1	0372231
513116M1	0372240
513133M1	0372245
513833M1	0172235
513890M1	0172221
514132M1	0100057
514806M1	1400066

OE	
514891M1	2600155
515757D1	0400081
516467M1	1472251
517344M1	1472238
517344M2	1472238
517411D1	0385312
517456M1	0372231
517951M1	0173247
517951M91	0173247
517965M1	0100159
518125M2	0200076
518223M2	0100053
518505M1	0372199
518506M92	1573238
518671D1	0285311
519958M1	0200146
520305D1	1600100
521110M1	0172216
521370M1	0172225
521398M91	0173247
521404M1	0173249
521411M2	0173240
522061M91	0173253
522063M1	0172219
523733M1	0372204
523734M1	0200109
523735M1	0100184
524413M92	0372231
525009M91	0372242
525832M1	1472238
525832M2	0172228
525833M1	0172228
525906M1	1472227
526969M1	0372242
529883D1	0185340
529900M91	0373251
529964M1	0272218
530328M1	1272212
530329M1	0372203
530756M1	0100186
531371M1	0172235
531603M1	0372232
532527M1	0422134
532779M92	0372232
533902M1	0172208
539735M1	0172219
541192M1	1912177
542304M1	1101149
545000M1	0111224
545654M1	0202172
550596M1	2602194
55397PF	0172214
55471PF	0372231
555243D1	0285293
556779M91	0201090
557292M1	0702199
557514M2	0201177
557784M1	0312172
557784M2	0312172
558141R1	0702199
559808M1	0102123
561800M2	1401175
562088R1	0302197
578628D1	0189298

MASSEY FERGUSON

OE	Gates
578629D1	0289299
583824M1	0104242
584849M2	0102183
584850M1	0201109
595851M1	0372242
603265M1	0902157
603450201247MWM	0173231
603719M1	0110126
603896M1	0101107
6042011M1	1401208
604308M1	1902120
604658M1	0102125
604735M1	2002135
604964M1	0201108
605018M1	1601103
605637M91	0101085
605638M91	0201090
606018M1	1401101
606547M1	0210144
607680M91	0702212
610097M1	1902102
610119M1	1981392
610470M1	0202209
610506M1	2602194
610813M1	0201177
610841M1	0502215
610842M1	0100272
610846M1	☎
611353M1	0302258
611588M1	1901188
612258M1	0101245
612563M1	2301174
612938M1	☎
619192M1	0172230
619317M1	1402140
619317M2	2101138
619327M1	1424202
619595M1	1902102
619760W1	☎
6200242M1	0502165
6200432M1	0812233
620050M1	0101085
620073M1	0702272
6201102M1	0172220
620112M1	0101087
6201602M91	0372240
6201932M1	0372240
620201M1	0102184
620202M1	0102570
6202555M1	0124208
620291M1	1402609
620292M1	0102663
6202933M1	1525391 EE-TECH
6203323M91	0372242
6203678M1	0202268
620510M1	0101200
620511M1	1902204
620521M1	0102673
6209374M1	1423290
6209375M1	2901252
6210826M1	2023280 EE-TECH
6210914M2	☎
6211078M1	1401217
6211081M1	0323225 EE-TECH

OE	Gates
6211082M1	1125260
6211250M1	0202275
621231M2	0112223
621258M1	0101245
621259M1	0902122
621261M1	0201170
6212622M1	1901098
621262M1	0101099
6212790M1	2602244
621320M2	0112247
621321M2	0112223
621321M91	0112223
6214645M1	0172253
621587M1	0302248
621588M1	0702225
621646M1	0112188
6216981M1	1472227
6217950M1	0173253
6217977M1	0202230
6218984M1	0325362
6219167M1	0202285
6219396M1	0315204
6219414M1	1425257
6220987M1	0102163
6230739M1	1602240
6230741M1	1823248
623098M1	0101066
6231547M1	2623567
6231843M1	2602213
6232489M1	2023246
6236823M1	1272212
6237300M1	0157382
6237301M1	2657330
6237302M1	0357271
624390W1	☎
6247231M1	0301198
6247485M1	0757263
6247946M1	☎
6248926M1	☎
625641M1	1901188
625724M1	0201109
6262408M1	0157573
6263504M1	1401101
6268436M1	1423364
6272560M1	0140276
6272565M1	0153565
6273869M1	☎
6275380M1	0110196
6275381M1	0810228
6289544M1	0223304
629004M1	0301080
6290138M1	1900078
6290856M1	1423290
629212M1	0112142
6294242M1	1423389 EE-TECH
629716M2	0302219
629720M1	1902206
6298761M1	2023280 EE-TECH
630123M2	0302200
6303174M1	1623311 EE-TECH
6303185M1	0324230
636034M1	1400227
636154M2	0302197
636603M1	0201102

OE	Gates
637633M1	0300256
641406M1	1601120
641696M1	2601079
645701M1	2354293
647119M1	0301131
647120M1	0101107
647492M1	2101138
648012M1	0110215
648414M1	2901237
648459M1	1301116
648480M1	0104278
648769M1	0101504
669452M91	0300187
669454M91	1401081
671870M1	0372242
677653M1	2501256
677656M1	2101138
678053M1	0201258
687995M1	0201092
687996M1	0302179
7106858M1	1402317
71186454V	1472264
71188075V	1401220
71197876V	☎
71197999V	0324261 EE-TECH
71301859V	1401275
71302482V	☎
71305994V	2002237
71306200V	0372268
71307200V	☎
71309150V	☎
71309685V	☎
71310380V	0702225
71310382V	0224292 EE-TECH
71312339V	0300206
71314273V	☎
71315910V	☎
71316263V	0201333
71316268V	0212312
71317254V	0372257
71319657V	☎
71320449V	☎
71322418V	☎
71325150V	0101245
71325847V	0202230
71326253V	0301360
71326830V	☎
71333673V	2602194
71334919V	1401260
71336137V	0372260
71336199V	0102174
71336307V	0272247
71336997V	☎
71337000V	0101184
71339772V	0302281
71339886V	0202168
71342143V	☎
71344935V	☎
71345785V	0200125
71345800V	0302336
71347560V	0701418
71347561V	0201258
71348772V	2604217
71348989V	☎

MASSEY FERGUSON

OE	
71348999V	☎
71351260V	0724423
71354198V	0202305
71354210V	2902164
71356409V	1902206
71358134V	1601166
71358486V	☎
71358487V	2602213
71359598V	0102250
71359681V	2301174
71364154-6	0323374 EE-TECH
71364789V	☎
723521M1	0272210
723558M1	0372234
726015M91	1573238
734432M1	1472227
74321275V	1472264
745734M91	0273228
747278M1	0173224
764926M1	0172219
767356M1	0422134
773300M1	0172225
780931M1	0185310
782523M1	0112166
782835M1	0112185
782849M1	0102112
782849M2	0102112
782850M1	0102107
782850M2	0102108
783539M1	0112215
783907M1	0201123
783907M2	0201123
784170M2	0101430
784796M1	0102282
784796M2	0302281
784797M1	1601103
784797M2	1601103
785585M1	0102174
785585M2	0102173
785585M3	0102174
785676M1	0301375
785676M2	0101372
785806M1	0310109
785806M2	0310109
785810M1	1201291
787237M1	1202193
788317M1	0112166
788685M1	0812233
789084M1	0101392
789217M1	0702295
789697M1	0185284
789853M1	0310109
789930M1	0185316
789931M1	0185310
789966M1	0202172
789967M1	0185284
789976M1	☎
790833M1	0110126
790839M1	0202332
793861M1	0142225
793862M1	0185306
793863M1	0785283
794128M1	0112170
794129M1	0112212

OE	
795514M1	1201153
795514M3	1201153
795514M4	1201153
795582M1	0301141
795582M2	0301141
795587M1	0301141
796487M1	0202320
796487M2	0202320
797216M91	0102173
817129M1	0102129
828729M1	0172214
829002M1	0172201
829729M1	0172214
832085M1	0102184
832446M1	0201258
832490M1	1537168
832526M1	0100303
832538M1	0101156
832789M3	☎
832790M3	☎
832806M1	0202126
832807M1	0302197
832822M1	1601205
832832M1	0302241
832852M1	0110160
832855M1	☎
832866M2	0102415
832867M1	0201258
832869M1	0202172
832870M1	0102231
832872M1	2002253
832873M1	0112208
832876M1	2502099
832877M1	1901115
832878M1	0102161
832882M1	0301211
832895M2	2600070
832896M1	2600117
832906M1	0202310
832910M1	1902102
832965M1	0311177
833128M1	0102161
833131M1	0100340
833563M1	1401336
833655M2	0200128
833674M1	0102161
833758M1	0103103
833768M1	0110106
833854M1	0101227
833854M2	0101227
833855M1	1401412
833856M1	0142259
833857M1	0112200
833857M2	1912195
833857M3	1912195
833857M4	1912195
833857M5	1912195
833858M1	0112198
833858M3	0112200
833858M4	0112200
833858M5	0112200
833859M2	0112208
833859M3	0112208
833859M4	0112208

OE	
833860M1	0102406
833861M1	1401175
833862M1	1423216
833862M3	1423216
833863M1	0109123
833863M3	☎
833865M1	0225266
833865M2	0225266
833866M1	0142268
833867M1	0200109
833868M1	0112230
833868M2	0112230
833869M1	0168232
833870M1	1600100
833871M1	1523244
833872M1	0302313
833873M1	0123190
833874M1	0124258
833874M2	0124258
833962M1	0202230
834058M1	0102174
834110M1	0112212
834111M1	0101200
834112M2	0209107
834139M1	0302146
834140M1	0302281
834174M1	0112170
834175M1	1224245
834176M1	2624191
834190M1	0202172
834191M1	1902204
834254M1	0101291
834332M1	0201191
834492M1	0101099
834492M2	0101099
842110M1	0301373
842382M1	2600124
842383M1	0501121
842389M2	0201123
842413M1	1301116
842413M2	1301116
842413 1	0101114
842417M1	0372245
842419M1	0301301
842423M1	2609135
842463M1	1901098
842464M2	0102129
842644M1	0201092
842796M1	0173245
842809M1	0302251
842845M1	0301155
842851M1	2301174
842935M1	0102107
843008M1	2600124
843009M1	0200125
843029M1	0102180
843030M1	0202268
843040M1	0102180
843041M1	1902206
843045M1	0172221
843198M1	0172235
843302M1	0102449
843310M1	0101454
843313M1	0142167

MASSEY FERGUSON

OE	Gates
843324M1	2602381
843413M1	1301116
843413M2	1301116
843571M1	0372232
843732M2	☎
843737M1	1601103
843742M1	2601323
843747M1	0102419
843758M1	☎
843759M1	☎
843760M1	1902376
843811M1	0302197
843948M1	0111213
844077M1	0122158
844079M1	0372234
844079 1	0172235
844091M1	☎
844163M1	0122155
844171M1	1473236
844306M1	1300104
844307M1	☎
844336M1	☎
844461M1	0172208
844475M1	1125260
844496M1	☎
852175M1	2501076
864049M1	0101168
866862M3	1423216
866865M2	0225266
87041732C	0702225
874097C1	0172211
890982M1	0172225
893508M1	0372203
893575M1	0372231
895575M1	0372231
896585M1	0372231
899519L	1401412
90070001A	0173234
901762M1	0102189
901855M1	1602150
902270M1	2383223
903412M1	1401180
903412M2	0301183
903552M1	1601218
903555M1	1601205
903594M2	0201102
904419M1	0100321
904454M1	1602150
904554M2	1602150
905447M1	0111116
905481M1	0101321
905737M1	0202187
905920M1	0111213
905921M1	0111241
905980M1	0123153
905981M1	0312284
905981M2	0312284
905982M1	0112208
906022M1	0372231
906022M2	0372231
906424M1	1472251
906424M2	1472251
909319M3	0172225
912717M1	0812233

OE	Gates
912877M1	0270259
916799M1	0402159
916800M2	0202332
916801M2	1902206
916833M1	0111123
916854M1	1401304
922921M1	0201333
923639M1	0101168
923802M2	1912195
923971M2	0112166
924327M1	1601120
924623M1	1401129
924769M2	1601120
925216M1	0101200
935133M1	2685308
936291M1	1900095
955881M1	0202268
960029M1	0172214
960912M1	0422134
960972M1	0422134
962184M1	0172225
962184M2	0172225
962666M1	0373225
963175M1	0172216
965616M1	0272210
966427M1	0272210
9666427M1	0272210
968721M1	0172225
969186M1	0172219
973099M1	0200089
975368M1	1400087
976941M1	0100083
977679M1	0200086
979022M1	0200086
9811830W2	0124204
995514M4	0201152
A3288601	0285251
A3288623	0285251
A3288999	1885281
A3289213	0385289
A3289224	0385289
A3289503	0285297
A71410501	0285314
AG027148	0200109
AG121891	0285293
AG605631	0200124
AG605632	0172225
AG609854	1885281
C1MT05x211	2002228
C1MT05x212	0302240
C5948	0172188
CR112	0402159
CR121	0302224
D-41981700	0202285
D-41993400	0324237
D-49030015	0173240
D-49030016	0373225
D5420	0101158
GB5123	0100257
GH5038	1401180
GH5045	1901136
GH5046	1401304
GH5047	0201109
GH5096	1401122

OE	Gates
GH5110	1401127
GK5019	0104405
GK5032	0302313
GK5045	0101242
GK5080	1602150
GK5098	0702212
GK5105	0101184
GK5262	1602240
GT5027	0104426
GT5047	0200219
GT5072	1601205
GX1720674M1	0201109
GX1721130M1	0201108
GX1721398M1	0202209
GX1722880M1	0337304
GX1722939M1	1401304
GX1722969M1	0337311
GX1724341M1	0201108
GXA10889	1401216
GXA20597	0102137
GXA21267	0202182
GXA21368	0201090
GXA21789	0201108
GXA21798	0201108
GXA21799	1901115
GXA21963	0102180
GXB13376	0302393
GXB13379	2619363
GXB13508	1602396
GXB13509	0302326
GXB13621	0102257
GXB13622	0702272
GXB13623	0102461
GXB13624	0302224
GXB13629	1402307
GXB13630	1902206
GXB22042	0173212
GXB22189	1330221
GXB24346	2901237
GXB24370	0101099
GXB24378	1430213
GXB24403	0202209
GXB24429	0102123
GXB24430	0201108
GXB24550	0302134
GXB24809	1401101
GXB25034	0130307
HR3906	0102683
J892	0101087
K5009	2601079
OX18245	0102163
PF55351	0173227
PF55354	1272212
PF55355	0173240
PF55356	0173191
PF55358	0172217
PF55360	0172208
PF55362	0173244
PF55363	1473236
PF55365	0173247
PF55366	0173224
PF55370	0173245
PF55373	1573242
PF55374	0372232

MASSEY FERGUSON

OE	
PF55375	0301080
PF55376	0422134
PF55377	1472236
PF55378	1472227
PF55379	0372255
PF55380	0172219
PF55383	0372242
PF55385	1272212
PF55389	0172225
PF55390	0372231
PF55393	0101085
PF55396	0372240
PF55397	0172214
PF55398	0173234
PF55399	0173219
PF55400	0173227
PF55401	0173217
PF55402	0173232
PF55403	0173218
PF55404	0273215
PF55405	0272218
PF55406	0173240
PF55407	0173223
PF55408	0373221
PF55409	1573238
PF55410	0173231
PF55411	0173217
PF55412	0173227
PF55413	0173223
PF55414	0372242
PF55415	0372234
PF55416	0173200
PF55417	0173208
PF55418	0173213
PF55419	0173232
PF55422	0173253
PF55429	0172221
PF55433	1472236
PF55434	0372240
PF55446	0173217
PF55447	0372223
PF55450	0172208
PF55455	0172235
PF55457	1472227
PF55458	0372234
PF55469	0372255
PF55471	0372231
PF55473	0172225
PF55481	0373221
PF55486	0173218
PF55489	0173218
PF55491	0372231
PF55492	1472236
PF55493	0173245
PF55497	0422134
S0613113	2017103
S0613116	0100083
S0613122	1472227
S0613124	1472236
S0613147	1400153
S0613148	0100159
S0614115	1601103
S0614122	1601120
S0614124	1401129

OE	
S0614125	1401129
S0614131	1201153
S0614136	2001162
S0614140	2001178
S0614143	2001190
S0614144	0101200
S0614146	1601205
S0614147	1601218
S0614149	1401209
S0614150	1401234
S0614152	0101242
S0614157	0401279
S0614166	1401378
S0614172	1401405
S0614208	1301116
S0614212	0201124
S0614214	1401127
S0614215	2001127
S0614216	1901133
S0614217	2001129
S0614222	2001143
S0614225	0101151
S0614226	0101151
S0614227	0301155
S0614242	1601185
S0614246	0101200
S0614260	0101287
S0615108	0102125
S0615110	2002135
S0615116	1602150
S0615121	0202172
S0615123	0202182
S0615124	0302197
S0615128	0202209
S0615129	0302220
S0615130	2002211
S0615133	0302251
S0615135	0502215
S0615139	2002279
S0615140	2002283
S0615146	1402336
S0615147	1902376
S0615150	0102406
S0615155	1602396
S0615161	2002179
S0615162	2002167
S0615163	1202193
S0615164	0202222
S0615165	2002342
S0615167	0102231
S0615168	1902204
S0615169	0102189
S0615170	2002190
S0615173	0302200
S0615182	2002253
S0615189	2619389
S0615190	0302419
S0619041	2010306
S0619054	2023212
S0619062	2004345
S0619065	2023280 EE-TECH
S0619071	2005364
S0619080	2024241 EE-TECH
S0619082	2023246

OE	
S0619085	2023474
S0619090	2024368
S0619091	2023199
S0619092	2023280 EE-TECH
S0619093	2023419 EE-TECH
S0619146	2013144
S0619168	2012273
S0619169	2013164
S0619170	0110162
S0619173	2012156
S0619175	0212169
S0619178	0112169
S0619179	2013171
S0619180	2013220
S0619181	2009158
S0619182	0212169
S0619183	2012167
S0619185	0111232
S0619190	2013171
SXS71	0201215
U10597	1623311 EE-TECH
U10598	0210202
U32804	0201124
V33099800	0372203
V33279300	0372234
V33279600	0172219
V35354900	0217106
V625121530	0189280
V684101025	0173214
V684101050	0173214
V684101100	0173219
V684101150	0173223
V684101175	0372223
V684101225	0273228
V684101238	0173225
V684101350	1573238
V684120825	0372197
V684120875	0172201
V684120900	0372203
V684120918	0372204
V684120925	0372204
V684120950	0172206
V684120975	0172208
V684120992	0172208
V684121050	1472251
V684121075	0172216
V684121100	0272218
V684121125	0172219
V684121200	0172225
V684121225	1472227
V684121250	1472227
V684121275	0372231
V684121550	1472251
V684121575	0172253
V684121625	0372257
V684121650	0372258
V685061725	0284286
V685081315	1485258
V685081660	0785284
V685081680	0785285
V685081710	0785288
V685081730	2685289
V685081745	2785290
V685081800	0285294

MASSEY FERGUSON / MENGELE / MITSUBISHI-SATOH / NEW HOLLAND

OE	
V685081850	0285297
V685081895	0285301
V685081920	0285303
V685082300	1585332
V685121370	0342183
V685121530	0189280
V685121555	0189283
V685121570	1389285
V685121585	1489286
V685121610	0289288
V685121725	0289296
V685121845	0289304
V685121860	0289305
V685121880	0189308
V685121905	0289309
V685121945	0289312
V685122020	2689318
V836007765	0101088
VA205892	0372232
VA357190	0372234
W403404D	0202320
W4863	0902122
W508938E	1601166
W895806L	1401275
W9811180	0702263
W9811470	0302390
W9811790	1401412
X696623800000	0172221
X696624200000	0172225
XP12472	1502315
Y302935	0200090
Y55970	0110126
Y57497	2002365
Y855049	0102257
MENGELE	
1111678	2937230
1111717	1137269
4109135	2625406
04109135	2625406
4113180	0371357
4113516	0326432
4113518	0326303
4113598	0125209
4122838	0326303
4133180	0371357
98014367	0701095
98018167	0173210
98022173	1401137
98022618	1901133
98022745	0301141
98022753	0101230
98022754	0101242
98023422	1424181
98024123	1423188
98024329	2623194
98024334	0223201
98025202	2624191
98025203	0324196
98026090	1424202
98027977	0324198
98028535	☎
98029075	1424253
98029076	1123251
98029383	0173223

OE	
98029384	1573242
98031800	0324263
98031801	☎
98031802	2124361
98031803	0724370 EE-TECH
98032070	0324230
98032914	0370357
98036087	1424227
98036261	☎
98036276	☎
98039373	1423179
98039776	1426413
98039777	0371372
98039925	0372268
98039955	☎
98041405	0202139
98041408	0126268
98041788	1524401 EE-TECH
98042220	0124204
98043776	☎
98043777	0324392
98043929	0302136
98045896	2671363
98046005	0172235
04-113516	0326432
04-113598	0125209
04-122838	0326303
04-133180	0371357
98-014367	0701095
98-018167	0173210
98-022173	1401137
98-022618	1901133
98-022745	0301141
98-022753	0101230
98-022754	0101242
98-023422	1424181
98-024123	1423188
98-024329	2623194
98-024334	0223201
98-025202	2624191
98-025203	0324196
98-026090	1424202
98-027977	0324198
98-029075	1424253
98-029076	1123251
98-029383	0173223
98-029384	1573242
98-031800	0324263
98-031802	2124361
98-031803	0724370 EE-TECH
98-032070	0324230
98-032914	0370357
98-036087	1424227
98-039373	1423179
98-039776	1426413
98-039777	0371372
98-039925	0372268
98-041405	0202139
98-041408	0126268
98-041788	1524401 EE-TECH
98-042442	0724325 EE-TECH
98-043777	0324392
98-043929	0302136
98-045896	2671363

OE	
E644206	0366248
MITSUBISHI-SATOH	
180190	0173217
180200	0173220
4136713030	0172214
K7974241	0172216
MD030768	0173205
NEW HOLLAND	
20481	1901115
21486	0173189
32840	1601205
42002	0101222
46914	1102171
48224	1901188
55970	0210129
56242	2001190
56325	0402153
56408	1300092
56606	0202285
56853	1401175
57471	1902206
57604	0302098
57902	1423207
58417	0302224
61129	0173231
63106	2002253
63804	0302197
64234	0102125
66232	2602244
66869	1512251
92756	0172208
100345	0272218
103579	2388232
103580	0385263
103724	0400108
108324	0285274
109130	0305357
113036	0301426
121444	0372240
121960	1902144
126805	1400066
126866	0200085
129696	0102181
130012	0372242
130013	0372260
130071	1472238
131725	0302197
132747	0385324
137695	0702212
142976	0101169
151992	2002190
161374	0301117
163437	0702295
164528	0709210
166203	1901133
166906	0173187
168618	0202209
170876	2602288
179878	0102137
182381	1601185
185471	1912195
186347	0302200
186623	1425303
189130	0324184

NEW HOLLAND

OE	Gates
189131	0324211
197411	☎
212509	1401113
213105	0302136
214252	2002167
215249	0102181
219250	0573202
219349	0173197
219435	0200098
221458	0201258
221957	0223316 EE-TECH
221958	0223318
224354	0173195
225915	0102161
226487	1401209
226488	1401208
227247	0402159
228673	2624322
229760	0323219
230037	0172219
230038	0172219
230039	0372234
230040	0301375
230041	2601079
230042	1401081
230043	0401111
230044	2101138
230045	0301147
230046	0301183
230047	1401204
230048	0101222
230049	1201291
230050	1401306
230051	0302098
230052	1902102
230053	0302124
230054	0402131
230055	1402140
230056	0402155
230057	0302179
230059	0102216
230060	0202235
230061	0202268
230062	0302313
230064	0202361
230065	0302428
230066	0102489
230067	1402547
230068	1402587
230069	1602631
230070	0102663
230073	0330293
230074	0330331
230075	1511156
230076	0112182
230077	0812262
230078	0213186
230079	0381384
230080	0381385
230093	0202187
230094	0401279
230101	0110126
230103	0330188
230108	1601218

OE	Gates
230127	0372232
230128	0301392
230131	0172221
230143	0301375
230150	2601079
230151	1601103
230152	2301174
230153	1401234
230154	0101245
230155	1401248
230156	1401260
230162	0102180
230164	2002190
230166	0302251
230167	0902289
230168	0202310
230169	1402650
230170	0203273
230172	0312241
230267	1402547
231583	0324230
234658	0173205
239104	☎
242307	0201123
244025	0201123
244853	0322421
245213	0322415
246573	1423286
246727	0301360
246771	0200134
246978	0325290 EE-TECH
246980	0303317
247782	0102216
248133	0200076
248332	2001129
248752	0323183
251499	1200149
251512	1601218
252155	1415188
254084	0173234
254093	1913200
255603	0173213
259346	1472227
259348	0173227
259477	1401129
261000	1413195
261001	0313269
261472	☎
263765	1401194
263766	1401194
264557	0172235
266209	☎
266408	1524289
268612	0352336
271471	0102497
275422	0173231
275425	1901283
275427	1401231
276565	1601349
276602	1401231
276634	1401487
282333	0285345
283105	0302227
283139	0305353

OE	Gates
283315	1224245
284062	2602118
284063	0202182
284235	0173213
284521	☎
286497	2001190
288477	0323229
302791	2901237
302792	0101242
302793	1402270
308548	0102683
309087	0330351
309364	1602150
310050	0172225
314115	0812275
317063	0202275
320043	0401111
320059	0102216
320883	☎
320935	0309132
321559	1413193
321582	0102257
321583	0324230
322686	0302281
323037	0101311
323318	1902204
323413	0402153
323646	0325214
323661	2602145
323904	☎
324391	0303257
324632	2002211
325551	0401111
325552	0312263
325554	0312263
325555	0312263
325566	0312263
325568	0312263
325569	0401111
325896	0202268
326049	0110126
326135	1401405
326298	0102129
326467	0309132
326468	1413193
326469	1413193
326470	0324230
326471	0325214
326472	2002190
326475	0702199
326478	0402153
326954	0311169
327024	0173234
327041	0273217
328424	0330336
330198	0812275
330204	1901133
330441	0313272
330715	0202275
331019	1401384
331094	1530380
331098	☎
333255	0202332
333347	0305278

NEW HOLLAND

OE	Gates
333958	0302262
334065	0310109
335258	0401111
336386	1573238
336396	1573238
336426	0373221
336610	0102276
336612	2330335
336784	0313181
337415	1602195
338921	0302302
350236	0324284
350245	1401272
350312	0102161
350776	0313283
352038	0172230
352219	0330292
353418	1602254
353584	2002283
353882	0172235
354115	0812275
354338	0300064
355797	0213186
356024	0312262
356024	0812262
356025	0313271
356913	0302134
357250	1402293
362141	0301447
362500	0301276
364033	0172225
364418	0311177
367659	0311169
371222	0172225
373401	0312319
375977	0303261
377164	0101366
378201	0101468
378672	0305315
378989	1901133
379217	0102183
379540	0402153
381236	0372240
381237	0372240
381489	0300212
383416	0302146
383927	0272210
384397	0372271
386155	0373225
387452	1224272 EE-TECH
387454	0325209
387460	0315188
387469	0302251
387931	0301147
388280	2610138
389245	1401145
391142	1523259
391143	0301217
391650	0325282
392134	0302219
392361	1425237
393326	0323270 EE-TECH
393519	0372257
394426	0101298

OE	Gates
395955	0302134
396749	0402153
396750	0402153
397297	0324279 EE-TECH
397298	0124208
398731	0301355
399058	0372268
410896	0302146
411543	0325248
417643	0213186
420606	0312172
421173	0372232
421178	0372232
422281	1401253
422441	0300206
422725	0102137
422731	0302248
422791	0302248
424317	0312172
424318	0112182
424563	0327292
425011	0225286 EE-TECH
426924	1423211
427012	0302136
427455	1699317
427456	0101168
427766	0173249
431784	0301217
432642	0372258
432801	0373225
432802	0373225
432829	1573238
433639	1601120
433746	0301351
433747	0301351
434044	0325367 EE-TECH
434045	1425218
434046	1402217
434047	0323229
434160	0315205
434222	0323284
435917	0327215
435922	1813249
436304	1573238
437033	0402155
437226	0784277
439129	0312267
439446	1424200
439495	1400264
439496	0372325
439832	0310153
440780	0313321
442457	0173200
443596	1699317
443634	0372223
443636	0373221
443705	0372260
443775	1523417 EE-TECH
444045	0372231
444934	0213186
444935	1413193
444936	0313271
445640	0302134
445930	0372271

OE	Gates
446452	0202209
446780	2602304
446969	0312262
446969	0812262
446970	1812281
446971	0312291
447031	0324299
447041	0302197
447076	0302219
447436	0372255
448794	1402307
449380	0373262
449701	1401442
449769	0223304
449770	0323426
449837	0304325
450511	0368227
450552	1637240
450699	0201152
451076	0101287
451078	1401271
451457	0324284
451481	0325209
451791	0310146
451832	0372257
452022	0372262
452023	0372262
452075	0100141
452216	0302369
452301	1601120
453268	1401208
454177	2300192
454194	0100141
454990	0324392
455327	0125211
455586	0357432
455649	0373264
455865	1425218
455958	0300218
456216	0372244
457309	0100357
457643	0300212
458353	1424475
458780	0202187
465058	0312291
465059	0312280
466140	0372232
467783	0301301
468291	1402270
468759	0302227
472598	1401145
479898	0372231
500594	0172220
500595	0172214
500597	0372223
500598	0173223
500599	0173216
500602	0173230
501353	0373221
501543	0172220
516776	1401248
517680	1224272 EE-TECH
518300	0173200
521108	0102161

NEW HOLLAND

OE	Gates
522357	0102176
523946	0737337
538450	0100303
538893	0502215
543226	1118090
561832	0310109
562569	0201109
564450	0323254 EE-TECH
565234	1901097
565498	0100141
570221	0102176
571684	0172235
571895	☎
571926	0324279 EE-TECH
571927	1400071
572192	0172219
572981	0172217
573957	1900106
576135	0323175
576676	1472238
576771	0325294
576772	1901133
576774	0172225
576775	0172225
576776	0172237
577240	1472238
577900	0102148
577982	0272215
578097	0227294
578206	0101321
578897	1573242
579364	0102125
590154	0172219
592711	0372234
592712	0372234
593325	1401314
598436	0201328
600101	0273228
601881	0368245
602211	0172216
605529	0401279
605580	2602288
610767	0372260
612305	1472264
613568	☎
614040	0202305
614963	0369288
615790	0300137
616355	0302220
616476	☎
616484	☎
617362	1423188
617901	0173232
618040	0301426
618805	0302220
618853	0323472
619657	0272247
619748	0302224
619842	☎
620944	1937206
621104	0102148
621367	0702225
621368	0202230
624398	0809104

OE	Gates
624650	1101149
625241	0325301 EE-TECH
626654	0372240
626657	0372240
627561	1101149
627870	0173257
630010	0312262
630406	☎
631478	0369282
632243	0373201
632244	0373178
632679	0157260
632880	0172221
632881	0173209
632889	0137218
632890	0137218
633512	0301198
634042	2002237
634069	1401217
634563	1501181
636645	0313269
637782	1413201
637783	1513207
638337	1513207
640091	0101158
640143	0213197
642569	☎
642920	0357416
643076	0357350
643307	0323225 EE-TECH
643353	0401279
644733	0301198
647901	0372232
649035	0357416
656028	0201109
675732	0272215
677419	2001129
679215	1401134
682008	0303370
692974	☎
692975	0351272
694676	0101168
694982	1902206
695648	1424219
696719	1400066
699268	0357262
699368	0357250
703274	1300092
703747	0202187
705807	0201177
705808	0201177
708176	2623222 EE-TECH
708177	0323238
708178	0101200
709806	2023199
709997	0101158
709998	0101159
710751	☎
710752	0710117
710754	0102108
713281	0201215
715130	0368238
715782	2624191
715785	1413193

OE	Gates
716254	0101098
716258	0201124
716414	0102231
716416	0302717
717075	0302224
717399	1426253
717699	0323281
717700	1413195
719536	0323281
727852	1102171
740013	2625231 EE-TECH
740014	2023246
740150	0304223
743041	0110217
743877	0225286 EE-TECH
746889	2602287
746893	0223304
746894	0323426
747057	0225286 EE-TECH
747177	0272247
747403	0357261
748003	0372255
748004	0373264
748337	0324301
748473	0323225 EE-TECH
750045	0173244
750166	0326220
750290	0325367 EE-TECH
750318	0310153
750773	0402437
751095	0325356
751222	1423301 EE-TECH
751223	1423240
751224	0324263
751522	0372245
751626	0302197
751896	1523417 EE-TECH
753053	0102257
753063	0302224
753252	0323426
753276	0172214
753415	0372253
753416	0272247
753643	0201333
753732	1101149
753797	0101085
754165	0372204
754285	0202168
754388	0201112
754389	1401208
754423	0302219
754768	0223515
755808	2612258
757100	0812275
757725	0713182
758340	☎
758632	0812262
758728	0372257
768340	2043185
772654	0172228
772656	0272247
773255	0272247
773300	2610134
774041	0312316

NEW HOLLAND

OE	Gates
774199	0301353
774747	0323281
782169	2602194
782170	0202209
783511	0172219
785415	0323282
787583	☎
787800	0173224
788803	0357416
792809	0310128
792811	0111152
795009	0357350
796623	0357250
797475	1899278
797978	0357428
797979	0357429
798255	☎
821812	0302219
822022	0372245
823644	1472236
824175	0372271
824176	0200204
824182	1472264
824517	0372275
824518	0172253
824801	0272218
825013	0323183
825399	1402436
834460	0315198
848607	0101158
849514	0312262
849888	0200109
849889	1400119
851791	/
851792	0370253
855387	1224272 EE-TECH
855528	0372232
855676	0372260
855718	0137218
855833	0101087
855924	0269238
855981	0372232
856195	0201102
856310	0102231
856328	0244287
856369	2002342
856385	1402293
856518	0372234
856526	0323231
856542	0101088
856732	2001146
857128	1901115
857136	1425171
857755	0202222
857813	0102163
858900	1472227
859063	1401175
861731	2101138
900611	0172216
904027	2623567
913058	0302240
913151	1201153
913153	0372286
913506	0102183

OE	Gates
913524	1501398
915800	0173205
915820	0330306
916342	0301351
916348	1900113
916504	0349277 EE-TECH
916849	0315204
917374	1524314 EE-TECH
918062	0372268
918367	0102112
918402	1901136
918461	0325356
918481	0173245
919391	1201153
919543	0172201
919544	0372203
919681	0323229
919739	0303147
920067	0325356
920093	2001162
920913	0325367 EE-TECH
920914	0326220
921178	1902204
921263	1401336
921330	0302345
921698	0272247
922311	0325376 EE-TECH
922872	0325361
922911	0325362
922985	1401164
923019	0300230
976208	0224247 EE-TECH
980546	2002283
997373	0323381
997637	2625326 EE-TECH
1101723	1901133
1101908	2002253
1108520	0102163
1111895	1319233
1112638	0713308
1113831	2826318 EE-TECH
1113928	0172235
1169694	1118132
1170132	1423292
1170157	0285320
1301131	1699317
1487307	0285268
1721000	0173197
1865046	0384324
1865047	0342140
1865048	0384324
1909636	1472238
2040910	0201102
2041024	0101151
2041084	1401127
2041124	2319270
2201165	0102129
2202076	0102161
2853138	0385263
2855950	0785267
2858019	0785286
2976800	0172235
3034944	0285264
3131095	1423202

OE	Gates
3140058	0272218
3142558	0372240
3142590	0372197
3143002	0173222
3781694	0301155
3795185	2002253
4113516	0326432
4113598	0125209
4122838	0326303
4549901	0324392
4558657	1425218
4582127	0272210
4607107	0101105
4611312	0172221
4688853	0373221
4698598	1400114
4702438	0173222
4705361	0173222
4712148	0173234
4756335	0173223
4796325	0173227
4796327	0173223
4796328	0173223
4796442	1573238
4796652	0173222
4806326	0372245
4809680	0173222
4814275	0173214
4816716	0172225
4830920	0172230
4898546	0285251
4898547	0785285
4899178	2385277
4899373	0387236
5088081	0173223
5094418	0173217
5106165	0173253
5112185	0173245
5140009	0173214
5140010	0273217
5140011	0373225
5140014	0173245
5140015	0373264
5154152	0172201
5186232	0173222
5186233	0173210
5186926	0173197
6018358	1413193
7010751	0111152
7436771	0325290 EE-TECH
7827397	0201090
7855042	1402307
7855059	0323169
7855455	1470277
7855620	0124297
7855745	0302219
7855828	0201102
7855836	0302224
7855885	2025172
7855893	0324299
7855943	0102161
7855950	0502215
7855968	0102184
7855976	1400076

NEW HOLLAND

OE	Gates
8092319	0300230
8238328	1472236
8238342	0372234
8652069	☎
8747177	0272247
8764971	0388230
8818153	0372234
8819672	0372234
9131533	0372286
9228728	0325361
9230191	0300230
9501018	0323173
9501163	0172206
9501182	0372245
9501314	0357265
9501315	0357265
9501462	0372275
9501643	0325356
9501707	0325356
9501863	0372232
9502654	0303144
9502745	0369281
9502828	0368247
9502832	0372244
9502942	0172253
9503181	0302428
9503427	0302197
9504005	0324377
9504227	0325356
9504450	0402155
9504547	1401336
9504548	1401336
9504953	0202235
9505014	1902206
9505015	0702212
9505016	0323254 EE-TECH
9505086	0101311
9505269	1925280
9505281	0323426
9505306	2024241 EE-TECH
9505865	1623311 EE-TECH
9506401	0357432
9506402	0357432
9506748	0372199
9507997	0101158
9508282	1402217
9508557	0372244
9508558	0372231
9508792	0323426
9509397	0202305
9509459	0300223
9509473	1401405
9509656	0324301
9509739	2602304
9510604	0201161
9511979	0703150
9512483	0305495
9512704	0300225
9512971	0302134
9513136	0300256
9513386	0324385
9513440	0337220
9513589	0384314
9513592	0384340

OE	Gates
9513620	0202187
9513876	0327327
9513984	0302200
9514192	0372318
9514193	0372318
9514310	0300202
9514311	0372284
9514601	0301324
9514691	0372284
9514846	0327346
9514987	1423393
9514988	0323377 EE-TECH
9514989	1423389 EE-TECH
9514990	0323374 EE-TECH
9516212	0337223
9516215	0337227
9575059	0372242
9575153	0202300
9579546	0302200
9593400	0325436
9593418	0302393
9593440	0302400
9593464	0325442
9596330	0302205
9596335	0302227
9596996	0210149
9598016	1823248
9598079	1224221
9598153	0372301
9598154	0300240
9598168	1925384 EE-TECH
9598228	0372297
9598575	2005577
9598724	0310109
9598725	1423240
9598768	0310349
9599416	0310338
9599812	0310338
9601511	1613266
9601666	0372240
9601699	0201177
9604339	0372240
9604713	0323231
9607568	0326233
9609607	0301117
9611904	☎
9611905	0369288
9612805	0172220
9613719	0300201
9613723	0100184
9613724	0100159
9613728	1900132
9613963	0324344
9616745	1902206
9622032	2602213
9625879	0372245
9636395	0372242
9636667	0372197
9637348	0372197
9672186	0101087
9672198	0323169
9672200	1601103
9672204	1401306
9672205	1401306

OE	Gates
9672206	0201090
9672207	0201108
9672210	1423211
9672211	0172228
9672212	0201097
9672213	0200073
9672216	0173222
9672219	1402140
9672223	0200140
9700204	0372244
9706589	1472236
9707244	0172221
9800111	0302262
9806163	0342140
9807449	0372223
9808497	2001162
9809884	0200093
9811150	0324392
9811151	2024376
9811867	0702292
9812049	0372258
9812882	2027266
9813998	2002279
9814069	0323173
9814483	0302393
9814759	0302400
9815396	0372288
9815431	0325436
9815432	0325442
9815437	0122155
9817249	0312284
9817250	0312277
9817250	0712277
9817374	1524314 EE-TECH
9817375	0702212
9817439	0202168
9817454	0372286
9817487	2002323
9817488	0327376
9817814	0300230
9817831	0300223
9817959	0372288
9818509	1523417 EE-TECH
9818568	0301155
9818570	0372325
9818704	0372255
9818705	0372271
9818830	0300241
9818994	0372325
9819470	1401127
9819508	1623311 EE-TECH
9819676	2002228
9828424	0342140
9829162	1585345
9831173	0372255
9831174	0172253
9831515	0172253
9831516	0172253
9831571	0325365 EE-TECH
9832299	0337232
9832309	0324284
9832311	0399322
9832601	0315205
9833541	0385331

NEW HOLLAND

OE	Gates
9833619	0372280
9833620	1272282
9833719	0399322
9833721	☎
9833722	0372244
9833888	0399400
9835010	0202275
9835047	0302425
9835120	0327381
9835382	0302281
9835426	0337227
9835429	0368247
9835683	0285330
9835742	0423318 EE-TECH
9835743	0399280
9835815	0372242
9835816	0172253
9835876	0372203
9835877	0372193
9835878	0172195
9837412	1602150
9838180	0123224
9838606	0102216
9838745	1402217
9838949	1272282
9839030	0372245
9839375	0202332
9842161	0300276
9842162	0101099
9842163	1100162
9842660	0372244
9842665	0357434
9842808	0310115
9845513	0173198
9849523	0373179
9849524	0373179
9850080	0372279
9850091	0302428
9850253	0223316 EE-TECH
9850261	2099358
9850321	0370359
9850532	0337234
9850770	1102171
9850782	0312265
9963275	0173212
9966451	0122155
9966894	0172217
20001727	1513221
20001749	1423211
20002112	0102129
20012977	1423210
20012979	0323169
20012986	1923499
20012993	1425167
20012996	0323169
20070601	0327375
20091111	1402336
20092100	0202222
20092102	0101242
20092103	0102163
20092104	1601205
20092105	1601218
20092106	0202139
20092108	0902289

OE	Gates
20092112	1302519
20092113	0201177
20092115	1502315
20092118	0312172
20093025	2002135
20093028	1102171
20093036	0172219
20093070	0312168
20098582	1901251
20098588	0713182
20098593	0302262
20471086	2699315
20953053	0337304
23446969	0812262
23452216	0302369
31314408	0285320
44000282	1901098
47107838	0172201
47129821	0172214
47131754	0285264
47135840	0385263
47364506	0242166
47409060	0399322
47412211	0285348
47413433	0301299
47414501	0326302
47415905	2624293
47430047	0385315
47434574	3024240
47451475	1624215
47452304	0385349
47452756	0385263
47470491	0285271
47487792	0151262
47499273	0324230
47513876	0189308
47517242	0310171
47533795	0301233
47554216	0326303
47572218	☎
47637560	1485353
47649517	☎
47649529	☎
47705826	0224247 EE-TECH
47753794	0285318
47778259	1485258
47783488	0272247
47801625	0342160
47805218	0751201
47837780	0351195
47852514	0343215
47901651	1524432
47948721	0101168
48013326	0151262
48114650	1224272 EE-TECH
48116472	0172208
60007646	1319233
60038666	1882321
60067654	0300223
60178276	1923257 EE-TECH
61068992	0787324
70785593	0324299
72048753	1453293
73201816	1901098

OE	Gates
73401350	0172206
76195542	0285268
76195544	0185275
76195548	0285276
76195551	0785267
76195553	2785290
76195554	0285292
76195557	0285297
76195558	0285301
76195559	0785284
76195561	0285271
76195578	1585280
76195587	0285309
76195600	0285303
76195602	0285301
76195604	0785267
76195606	0285306
80046914	1102171
80066232	2602244
80113036	0301426
80116140	Chain
80159837	2001190
80186347	0302200
80189130	0324184
80189131	0324211
80226486	0312211
80226488	1401208
80229760	0323219
80230037	0172219
80230038	0172219
80230039	0372234
80230040	0301375
80230041	2601079
80230042	1401081
80230043	0401111
80230044	2101138
80230045	0301147
80230046	0301183
80230048	0101222
80230049	1201291
80230050	1401306
80230051	0302098
80230052	1902102
80230053	0302124
80230054	0402131
80230055	1402140
80230056	0402155
80230057	0302179
80230059	0102216
80230060	0202235
80230061	0202268
80230062	0302313
80230063	1902351
80230064	0202361
80230065	0302428
80230066	0102489
80230068	1402587
80230069	1602631
80230070	0102663
80230071	0302803
80230073	0330293
80230074	0330331
80230075	1511156
80230076	0112182

NEW HOLLAND

OE	Gates
80230077	0812262
80230078	0213186
80230079	0381384
80230080	0381385
80230101	0110126
80230103	0330188
80230108	1601218
80230127	0372232
80230131	0172221
80230143	0301375
80230151	1601103
80230154	0101245
80230156	1401260
80230164	2002190
80230168	0202310
80230169	1402650
80230170	0203273
80230267	1402547
80246727	0301360
80246771	1900132
80246978	0325290 EE-TECH
80246980	0303317
80247782	0102216
80248332	2001129
80259346	1472227
80259477	1401129
80261000	1413195
80261001	0313269
80264557	0172235
80284521	☎
80309087	0330351
80309364	1602150
80320059	0102216
80320935	0309132
80321559	1413193
80321582	0102257
80321583	0324230
80323413	1602150
80323646	0325214
80324391	0303257
80325552	0312263
80325554	0312263
80325555	0312263
80325566	0312263
80325568	0312263
80326298	0102129
80326954	0311169
80327024	0173234
80327040	0173231
80327041	0273217
80327062	0172225
80328424	0330336
80330204	1901133
80330441	0313272
80330715	0202275
80333255	0202332
80333347	0305278
80333958	0302262
80334065	0310109
80335258	0401111
80336386	1573238
80336426	0373221
80336784	0313181
80337415	1602195

OE	Gates
80347469	0302251
80350236	0324284
80350776	0313283
80352219	0330292
80353584	2002283
80353882	0172235
80354115	0812275
80354338	0300064
80355797	0213186
80356024	0312262
80356025	0313271
80356913	0302134
80362500	0301276
80364033	0172225
80364418	0311177
80366784	0313181
80367659	0311169
80371222	0172225
80372809	0310128
80373401	0312319
80375977	0303261
80378672	0305315
80378989	1901133
80379217	0102183
80381236	0372240
80381237	0372240
80381489	0300212
80384397	0372272
80386155	0373225
80387452	1224272 EE-TECH
80387454	0325209
80387460	0315188
80387469	0302251
80387931	0301147
80388280	2610138
80389245	1401145
80391142	0301217
80391143	0301217
80391650	0325282
80392134	0302219
80392361	1425237
80392701	☎
80393326	0323270 EE-TECH
80393519	0372257
80394426	0101298
80395955	0302134
80396749	0402153
80396750	0402153
80397297	0324279 EE-TECH
80397298	0124208
80398440	0323169
80398441	1424251
80398622	1472236
80398731	0301355
80398748	0324237
80399058	0372268
80410896	0302146
80411543	0325248
80417643	0213186
80420349	0372271
80420606	0312172
80420819	0724171
80421173	0372232
80422006	0101291

OE	Gates
80422281	0124297
80422441	0300206
80422725	0102137
80422731	0302248
80424318	0112182
80424563	0327292
80425011	0225286 EE-TECH
80426924	1423211
80427012	0302136
80427455	1699317
80427456	0101168
80431784	0301217
80432642	0372258
80432801	0373225
80432802	0373225
80432828	1573238
80432829	1573238
80433134	1900089
80433184	0300202
80433417	0102148
80433430	0302220
80433435	0302251
80433531	1103242
80433639	1601120
80433746	0301351
80433747	0301351
80434044	0325367 EE-TECH
80434045	1425218
80434046	1402217
80434047	0323229
80434140	1961209
80434160	0315205
80434222	0323284
80435127	1912236
80436304	1573238
80437033	0402155
80439129	0312267
80439495	1400264
80439496	0372325
80439832	0310153
80440780	0313321
80442457	0173200
80443634	0372223
80443635	0373221
80443636	0373221
80443775	1523417 EE-TECH
80444045	0372231
80444934	0213186
80444935	1413193
80444936	0313271
80445640	0302134
80445930	0372271
80446780	2602304
80446969	0312262
80446970	1812281
80446971	0312291
80447031	0324299
80447041	0302197
80447076	0302219
80448794	1402307
80449380	0373262
80449701	1401442
80449837	0304325
80450511	0368227

NEW HOLLAND

OE	Gates
80450600	Chain
80451076	0101287
80451078	1401271
80451481	0325209
80451832	0372257
80452022	0372262
80452023	0372262
80453267	1401208
80453268	1401208
80454990	0324392
80455586	0357432
80455649	0373264
80455865	1425218
80456216	0372244
80457309	0100357
80457643	0300212
80458780	0202187
80500594	☎
80516776	1401248
80543226	1118090
80562569	0201109
80565498	1118090
80576771	0325294
80576772	1901133
80576776	0172237
80577240	1472238
80605529	0401279
80610767	0372260
80612305	1472264
80614040	0202305
80619748	0302224
80621104	0102148
80621367	0702225
80625241	0325301 EE-TECH
80636645	0313272
80643307	0323225 EE-TECH
80643353	0401279
80682008	0303370
80694982	1902206
80699268	0357262
80703747	0202187
80708177	0323238
80715785	1413193
80716253	☎
80716254	0101098
80716414	0102231
80716416	0202182
80717699	0323281
80717700	1413195
80719213	☎
80719214	☎
80724518	☎
80727852	1102171
80734877	0225286 EE-TECH
80743877	0225286 EE-TECH
80746889	2602287
80746890	2602288
80746891	2602367
80746893	0223304
80746894	0323426
80747177	0272247
80747261	0302197
80748003	0372255
80748004	0373264

OE	Gates
80749144	0302136
80749145	2301174
80750045	0173244
80750166	0326220
80750290	0325367 EE-TECH
80750318	0310153
80751626	0302197
80753053	0102257
80754165	0372204
80754285	0202168
80754388	0201112
80754389	1401208
80754423	0302219
80755808	2612258
80785415	0323282
80792809	0310128
80795009	0357350
80797978	0357428
80797979	0357429
80824175	0372271
80824176	0200204
80824182	1472264
80824518	0172253
80825013	0323183
80825117	1225316
80825238	☎
80825399	1402436
80851791	/
80851792	0370253
80855676	0372260
80912771	☎
80913151	1201153
80913153	0372286
80913524	1501398
80916348	1900113
80918062	0372268
80918402	2101138
80918481	0173245
80919681	0323229
80919739	0303147
80921178	1902204
80921330	0302345
80921698	0272247
80922872	0325361
80922911	0325362
80923019	0300230
81011710	0173230
81540764	0172225
81540767	1472227
81549846	0372223
81718144	0172228
81718145	0302097
81718146	0172221
81817633	0423318 EE-TECH
81817637	0323448
81822583	0372240
81836785	0372240
81843821	0372223
81845565	0372240
81845757	0372240
81865047	0342140
81865048	0384324
82007330	0342145
82010895	0342139

OE	Gates
82012177	0342139
82021010	0342142
82850750	0384324
82850751	0384325
82850752	0342140
83903416	0372223
83907659	0372223
83910824	0372223
83913921	0172195
83949803	0172195
84000133	0372242
84000189	0302220
84000190	0323426
84000191	1523417 EE-TECH
84000836	☎
84000838	0372284
84001336	0227353
84002709	0902157
84004443	0323437 EE-TECH
84004444	0423318 EE-TECH
84005357	0301117
84005417	0323313
84005860	0384324
84005861	0342140
84005971	2602420
84007006	0327292
84007307	0372280
84007677	0227395
84011339	0323437 EE-TECH
84011864	1485350
84012390	0325430
84012562	0325197
84012974	0372307
84012975	0372307
84015156	☎
84015531	0102176
84015852	1601120
84017579	0372309
84017621	0323448
84017742	0357271
84017753	0357271
84017835	0223318
84018864	0101168
84018998	0302429
84019041	0302281
84019385	0402437
84021488	0302419
84021505	1402433
84021588	0300201
84021589	0300201
84021590	0372318
84021591	0372318
84021863	0399462
84022152	0302419
84022215	0302424
84022377	0305270
84022378	0202261
84022715	0399437
84022807	0372275
84023277	0303117
84023278	0360230
84023911	1272212
84023913	0785326
84024926	0100057

NEW HOLLAND

OE	Gates
84026042	0323254 EE-TECH
84026045	0343303
84026080	0302320
84026668	0302224
84026761	0300223
84026762	0300223
84026892	0302146
84032454	1426198
84035748	0353283
84036070	0385359
84036144	1401208
84036145	0304214
84036578	0357261
84036579	0357261
84037815	0327223
84037964	0372297
84038109	0202187
84038200	0315205
84038363	1401122
84038364	1601218
84038365	1402293
84039364	0372288
84041069	1423470
84041070	0423458
84041094	0323472
84041095	0323462
84041106	0339136
84041157	0304364
84041287	1100172
84041377	0101158
84041465	☎
84041518	0372309
84042180	0367305
84043106	1401175
84043107	2301174
84045018	0302262
84045188	0301324
84045220	0302345
84045226	0201170
84045256	1902204
84045402	1225316
84045486	1424331
84045751	0372275
84045959	2002228
84052102	1424560
84053330	1923499
84054417	0369268
84056019	0172208
84056149	0304339
84056150	0304358
84056168	0101158
84056913	1201153
84056914	1201153
84056995	0323440 EE-TECH
84057085	0100272
84057392	0223201
84057393	0223204
84057482	0301339
84057578	0325607
84057609	2001178
84057610	2001178
84057710	0385354
84057874	0102250
84057903	0825454

OE	Gates
84057914	1425268
84058063	1439131
84058255	2602213
84058338	0101087
84058339	0101087
84058741	0170353
84061279	0724325 EE-TECH
84061293	0323282
84061463	1472251
84061465	1472251
84061468	0399322
84061615	1624328
84061953	0301183
84062866	0399291
84064058	1623297 EE-TECH
84064309	0323448
84064314	1923309 EE-TECH
84068997	0323331
84071851	1423476
84071858	1423476
84072278	0325607
84072406	1401180
84072421	0325537
84072613	1424313
84072772	1825189
84072815	1225216
84073276	2601233
84073457	0301147
84073615	0101184
84073933	2602145
84073979	1510174
84074137	0370357
84074272	1437231
84074273	1437231
84075053	0101184
84075345	1423286
84075635	0223404 EE-TECH
84075677	0399409
84075683	0399409
84075955	1623354
84076421	0323453
84078581	0367305
84100327	0399409
84137965	1923287 EE-TECH
84168012	0223304
84172256	0701422
84175580	0323431
84175581	0323285
84175582	1425268
84180490	0101225
84188121	0224306 EE-TECH
84188942	0304285
84191907	1927295
84192753	0327412
84194087	1502315
84196804	0100187
84214748	0201335
84215838	1485353
84223612	0187250
84229205	0785285
84238513	0342200
84238514	0187250
84247606	0227344
84254480	1524289

OE	Gates
84262973	1425292
84266080	0302320
84274885	0323541
84281470	1923257 EE-TECH
84284468	1423394
84291570	0302343
84292639	0285346
84292913	0385323
84296393	☎
84298895	0324317
84317961	0387236
84320963	0223304
84332132	0100187
84334995	0325607
84336005	0399322
84344776	☎
84345673	0302240
84345674	2823241 EE-TECH
84352807	1423404
84352808	0224406 EE-TECH
84353448	0101156
84371625	0285295
84373502	0385312
84376536	0323229
84376860	2624278
84384158	0372203
84394081	0325596
84395801	0373221
84395802	0173211
84398996	1424218
84398997	0323238
84398998	0324263
84406423	0385349
84412878	0785267
84422774	0372231
84431680	0349579
84432785	0202235
84434260	1423476
84434295	1123301
84435035	1123301
84435248	0170353
84438011	1425254
84439511	0302326
84440188	1602382
84441893	0785321
84442574	0373182
84442973	0300170
84443238	0371271
84443251	0170261
84443565	0285372
84443869	0342233
84446171	2300192
84446792	1623311 EE-TECH
84448591	1402217
84448701	0300350
84448759	0399324
84449048	0170261
84449232	0399319
84449233	0399312
84449518	0122155
84449662	0202222
84449765	0302343
84449861	1499396
84449874	0370341

NEW HOLLAND

OE	
84452112	0301131
84452153	1510140
84452683	0399899
84452723	1401194
84453627	1402243
84455757	0300187
84455765	0300187
84457069	0399809
84457079	0223204
84458482	0374755
84459056	0372257
84459680	0370333
84462530	2602244
84462590	0502215
84464057	0223304
84491658	Replaced by 47837780
84491659	☎
84513766	0387298
84522331	0785267
84522809	0325612
84536660	0342160
84582506	1424273 EE-TECH
84582509	0325529
84589012	0724321 EE-TECH
84589013	0324317
84607712	0324261 EE-TECH
84607713	0324271 EE-TECH
84790244	1201153
84790355	0204251
84790356	0104278
84792077	0112166
84814035	0370357
84817596	2002211
84817621	2002190
84817622	2602304
84817623	1425218
84817624	0201112
84817625	1401208
84817626	0372245
84817627	0303144
84817628	0302200
84817629	0323173
84817630	0372288
84817631	0325365 EE-TECH
84817632	0324284
84817633	0423318 EE-TECH
84817634	0325430
84817635	0102176
84817636	1601120
84817637	0323448
84817638	0385359
84817639	0372309
84817640	0367305
84817670	0372245
84818007	0342156
84818008	0342161
84818387	0369281
84818393	0368247
84970040	0323486
84971217	0327386
84981586	0323507
84981849	0312267
84982278	0323430
84989160	0337228

OE	
84989965	1400235
84991234	0324509
84991836	0502215
84993120	0325376 EE-TECH
84993224	2612258
84994984	0172211
84996134	0323486
84998862	0202332
84999531	0357308
84999647	0122155
85004716	0201092
85004717	1402140
85004718	2902164
85004720	2103333
85004721	1423240
85004722	1423290
85004723	0125322
85004724	0227286
85004725	1961209
85004726	0512258
85004727	0313181
85804035	0372244
85804036	0172253
85812044	0372257
85826230	1485268
86001157	1385254
86011009	0285372
86013676	1472227
86013678	1485350
86020845	0285264
86502470	0302124
86502858	1184350
86503087	0303370
86508838	1425191
86513664	0285301
86514163	0357433
86514256	0302224
86514496	0702199
86514497	1402217
86514499	0173223
86514500	0100053
86514501	0100083
86514509	1900176
86514511	0300266
86514512	0300267
86514514	0172228
86514515	2501076
86514519	1901094
86514520	1601120
86514521	1901136
86514523	1401145
86514524	1601166
86514525	0101168
86514526	0301183
86514527	0101187
86514528	1901196
86514529	1401204
86514530	1401208
86514531	1401216
86514532	2601233
86514534	2023199
86514596	☎
86514598	0172219
86514599	0272210

OE	
86514600	0173218
86514601	0173213
86514602	0173212
86514603	0173205
86514604	0173192
86514605	0173191
86514606	0384324
86514607	2484242
86514608	1472236
86514609	1472236
86514610	0373225
86514611	0172221
86514612	0172220
86514613	0172217
86514614	0373201
86514615	0172195
86514616	0372193
86514617	1472238
86514618	1472238
86514621	0272218
86514622	0272218
86514623	0173208
86514625	0173207
86514627	0173227
86514629	0172208
86514631	0372223
86514637	0372245
86514639	0372245
86514640	0372245
86514641	0173220
86514642	0172216
86514988	1400087
86516699	0342161
86516733	0172219
86517673	0325361
86517678	0100184
86517679	0101172
86517680	1224272 EE-TECH
86517751	1425257
86517907	1401275
86517908	2001162
86517911	0714187
86517912	0102276
86517915	0302220
86517925	0172237
86517926	2601077
86517930	1901097
86517931	1900151
86517932	0101242
86517933	0101230
86517937	0300170
86517938	0300137
86517939	1900113
86517943	1900196
86517952	0300260
86518260	0301211
86518568	0351568
86518569	0351272
86518570	0213197
86518571	1513207
86518659	☎
86518897	0372268
86518898	1699317
86518899	0372262

NEW HOLLAND

OE	Gates
86518900	0372260
86518902	0372204
86518903	0172188
86518904	0501273
86518907	0173245
86518908	0342140
86518909	0372231
86518910	1423144
86518919	0173183
86518938	0173231
86518943	1900095
86518944	1400115
86519303	1423319
86520042	1423198
86520043	1423188
86520126	0702199
86523096	1425257
86528541	1402293
86534422	1425229 EE-TECH
86537318	0327416
86537319	1925345 EE-TECH
86547070	0323472
86547809	1424475
86549361	2625231 EE-TECH
86563175	0351195
86566286	1423267
86566287	0302258
86566606	0225286 EE-TECH
86566785	1423286
86570558	0285316
86571938	0327416
86572020	0223204
86572021	1623311 EE-TECH
86572022	1401271
86584741	0323219
86589482	0325416
86592734	0751201
86595191	0301243
86596143	0351143
86610859	0351272
86610860	1613266
86615142	1423198
86629764	2001162
86729163	0724325 EE-TECH
86976208	0224247 EE-TECH
86980546	2002283
86988710	1823248
86989142	0372204
87011585	0323285
87020184	0302864
87031441	0387231
87031779	1423301 EE-TECH
87053803	0351803
87053804	0751201
87053805	0351805
87061270	0302224
87109130	0305357
87282305	0386278
87282333	0285348
87283139	0305353
87283315	1224245
87284244	1472273
87289309	0172206
87300105	0387236

OE	Gates
87309958	0385312
87309962	0385306
87309963	0342140
87315599	2002253
87316555	0385270
87316556	0384323
87317063	0202275
87319821	1923287 EE-TECH
87323050	1699317
87324567	0372244
87325314	1402217
87325327	1472251
87325684	0101156
87337385	0122155
87339998	0323431
87341371	0223201
87346514	0387290
87346859	0372272
87349745	1472273
87363088	0385289
87366024	0172189
87366407	0384279
87368902	1423389 EE-TECH
87372654	1901133
87374615	1400264
87382455	0342161
87393905	0323175
87402831	0385315
87403144	0385323
87403145	0285320
87415774	0285264
87437226	0284278
87441267	0285320
87441270	0785326
87441272	0285325
87443440	0785288
87476486	0705388
87485501	0172211
87485645	0727515
87489502	0372231
87491779	0324263
87521887	1401234
87526022	0223304
87527868	0324513
87531428	0385312
87531466	0317149
87535206	1472238
87540195	0351195
87543560	1402387
87545651	0326289
87545652	1423274
87545653	0325545
87546479	1423286
87547431	2001143
87547837	0351803
87556830	0173249
87557181	0324303
87564450	0323254 EE-TECH
87567251	1585272
87567471	0172208
87572660	0301141
87580097	0225286 EE-TECH
87580099	1423267
87580100	1423301 EE-TECH

OE	Gates
87583899	0324316 EE-TECH
87590392	0715187
87604563	☎
87608059	0285273
87618427	0384253
87621086	0715188
87621132	0385270
87622201	0351319
87628477	1423320
87628478	1323464
87635650	0393650
87636309	1401137
87646971	0388230
87653464	0300394
87654007	0392956
87655953	0302323
87656225	0272247
87662910	0372329
87663279	0386289
87664226	1425408
87664231	1423404
87664428	0300267
87664956	0392956
87671748	0223563
87676816	0351319
87677965	0325416
87683178	1401137
87699094	1985296
87705654	2001143
87705655	☎
87705866	0385306
87709228	0342156
87710660	0387245
87710661	0342153
87721960	0324261 EE-TECH
87733431	0100164
87739437	0201112
87741240	0325416
87747431	1524314 EE-TECH
87755884	0285309
87758085	0300279
87800127	0372240
87800129	0372242
87800858	0385306
87802644	0387245
87802822	0385312
87802911	0342153
87840341	0385270
87855836	0302224
87971217	1585280
89434160	0315205
89501182	0372245
89501863	0372232
89502654	0303144
89502745	0369281
89502828	0368247
89504005	0324377
89504547	1401336
89505865	1623311 EE-TECH
89506463	1523417 EE-TECH
89506748	0372199
89507997	0101158
89508557	0372244
89508558	0372231

NEW HOLLAND

OE	Gates
89508792	0323426
89509473	1401405
89509739	2602304
89510091	0301155
89512971	0302134
89513136	0300256
89513386	0324377
89513440	0337223
89513620	0202187
89513984	0302200
89514310	0300202
89514311	0372284
89514939	1423389 EE-TECH
89514989	1423389 EE-TECH
89514990	0323374 EE-TECH
89515075	0310193
89515076	0310157
89515166	0372253
89515167	0102125
89515172	0102123
89516212	0337223
89575059	0372242
89575153	0202300
89579546	0302200
89593400	0325436
89593418	0302393
89593440	0302400
89593464	0325442
89611905	0369288
89638606	0102216
89811150	0324392
89811151	2024376
89811480	1523417 EE-TECH
89811963	0323426
89813594	1401412
89814069	0323173
89815437	0122155
89817249	0312284
89817250	0312277
89817374	1524314 EE-TECH
89817375	0702212
89817439	0202168
89817454	0372286
89817487	2002323
89817488	0327376
89817548	☎
89817814	0300230
89817831	0300223
89817959	0372288
89818570	0372325
89818704	0372255
89818705	0372271
89818830	0300241
89818873	0325248
89819507	0323440 EE-TECH
89819509	1523417 EE-TECH
89819676	2002228
89831515	0172253
89831571	0325365 EE-TECH
89831693	0373182
89831694	0373201
89831695	1473203
89831696	0173205
89831697	0173213
89831698	0173210
89831699	0173216
89831700	0273217
89831701	0373221
89831702	0173223
89831703	0372223
89831704	0173227
89831705	0173225
89831706	0173231
89831707	0173232
89831708	0173234
89831709	1473236
89831710	1573238
89831711	0173240
89831712	1573242
89831713	0173244
89831714	0173245
89831715	0173247
89831716	0173249
89831718	0173253
89831719	0373255
89831720	0373258
89831721	0173222
89831722	0372193
89831723	0372197
89831724	0372199
89831725	0172201
89831726	0372203
89831727	0372204
89831728	0272210
89831729	0272218
89831730	0172219
89831731	0172221
89831732	0372223
89831733	0172225
89831734	1472227
89831735	0422134
89831736	0372231
89831737	0372232
89831738	0372234
89831739	1472236
89831740	1472238
89831741	0372240
89831742	0372242
89831743	0372244
89831744	0372245
89831745	0272247
89831746	0122155
89831747	0172253
89831748	0372257
89831751	1699317
89831752	0372268
89832118	0224247 EE-TECH
89832299	0337232
89832309	0324284
89832311	0399322
89832601	0315205
89833619	0372280
89833719	0399322
89833888	0399400
89835010	0202275
89835047	0302425
89835120	0327381
89835683	0285330
89835743	0399280
89835815	0372242
89835816	0172253
89835876	0372203
89837412	1602150
89837879	Chain
89838606	0102216
89839030	0372245
89839375	0202332
89850091	0302428
89850261	2099358
89850321	0370359
89850770	1102171
89850782	0312265
95011824	0372245
98021123	1472238
98039673	1425243 EE-TECH
98039777	0371372
98039783	0324198
98042197	0326308
98042220	0124204
98042442	0724325 EE-TECH
98042446	0372255
98045851	1573242
98046076	1472236
98411643	0173223
98419479	0172225
98419486	0272218
98424142	0173232
98429196	0372232
98432119	0373225
98433148	0373225
98454854	0422134
98473705	0173227
98490936	1472238
98493301	0172217
98493307	0372197
99466943	0372231
99466947	0372232
99472776	0342156
201108473	0302154
201108520	0102163
209553078	2637200
300070108	0172230
322930750	0385260
323019750	0285251
419375000	2901237
500344766	0172225
500369112	0373225
500371653	0386283
500380059	0342200
500386112	0372232
504009874	1485268
504020489	0342160
504029021	0289299
504049425	0385295
504113903	☎
504145203	0342160
504207016	0342156
504368979	0372255
504380539	1485350
684121400	0372240
684121475	0372245
684121500	0272247

NEW HOLLAND

OE	Gates
685081730	2685289
685121370	0342183
700051066	2471331
700051957	0371277
700052041	1402140
700052261	0349277 EE-TECH
700052372	0723221 EE-TECH
700052374	0349270
700052517	1902144
700053018	2425208
700053103	1223167
700053614	1401125
700054608	2001143
700054712	0323219
700054920	1472264
700055209	0422134
700055302	1423224
700055430	0170261
700055627	0323191
700055787	1425204
700055788	0323183
700055802	0349273
700055970	0110126
700055977	1625207
700055978	1125200
700056325	1602150
700057083	1505295
700057604	0302098
700701242	0225225 EE-TECH
700701244	1423216
700855122	2470319
700855585	2471336
700855718	0337220
700855791	0302400
700855833	0101087
700855965	2470270
700855973	0323165
700856195	0201102
700856302	0268234
700856310	0102231
700856526	0323229
700857383	0101066
700857813	0502165
701720895	0373262
701721000	0173197
701722321	0371339
702700262	2124361
703990010	0173213
707855059	0323169
707855356	0301117
707855414	0370274
707855455	1470277
707855588	1201291
707855695	2502099
707855760	1401147
707855828	0201102
707855836	0302224
707855885	2025172
707855893	0124297
707855943	0102161
770001008	1523593
920001732	1901094
920001739	0224144
920012994	1901136

OE	Gates
920012995	0172230
920012998	1573238
920016070	1901115
920016253	0172219
920016254	1472238
920017850	0401111
920018070	1901115
920018555	0373201
920018558	1473236
920018580	0173197
920018706	0372197
920018710	0101099
920018888	0373221
920018889	0373221
920019295	0372232
920019296	0272218
920019616	☎
920098590	1401248
944003230	2625231 EE-TECH
944003367	1425218
1374310262	0110162
1628297010	0173208
2604796324	0373225
4254138496	0372244
4270722517	2787387
9911861612	0737236
130100130071	1472236
130100130112	0372244
130100130113	1699317
130800060010	0273228
139900130003	0372240
139900270408	0372271
140100060001	0173232
140100130131	0372260
142000060001	1472238
142000130004	0272210
162000060001	0372242
162000060006	0372242
162000131001	0272210
190003140006	0172225
190003140007	0173232
190003140013	1573238
190003140030	0173208
190003140032	0173232
190003140041	0173232
190003140047	0372231
190003140078	0172201
190003140081	0272210
190003140084	0372203
190003141018	0173231
190003142278	0173194
190003142350	0173249
190003142358	1573242
190003142523	0372204
190003142525	0372234
190003142710	1401081
190003142718	0701095
990607383023	1424331
04-113516	0326432
04-113598	0125209
04-122838	0326303
04-133180	0371357
072510T1	0372223
082.383/28	1472236

OE	Gates
082.383/42	0372234
103580A	0385263
103580B	0385263
121960A	1902144
121960B	1902144
142976A	0101169
142976B	0101169
163437A	0702295
166906A	0173187
2/B133	1123301
219250A	0573202
221458A	0201258
228673A	2624322
243372A1	0285281
244025A	0201123
244025B	0201123
247428A1	0202209
248265A2	0172208
251512A	1601218
255603A	0173213
275422A	0173231
275422B	0173231
276602A	1401231
283105A	0302227
283105B	0302227
284062A	2602118
284063A	0202182
284063B	0202182
286497A	2001190
301146A1	0310157
3068901R1	1272212
3069379R1	1400066
3113342R1	0122155
3156216R1	0112188
3175457R1	1201153
3175578R1	1417242
3176558R1	2117268
317904A1	0202245
3228131R1	0372223
3228274R1	0422134
32840A	1601205
341530A1	0172201
355797A	0213186
380041A1	0744354
389069A1	0372270
42002A	0101222
431784K	0301217
500595A	0172214
500599A	0173216
500602A	0173230
501353A	0373221
501543A	0172220
518300A	0173200
532746R2	1401125
573957A	1900106
573957B	1900106
576775A	0172225
577240A	1472238
577240B	1472238
577982A	0272215
578897A	1573242
590154A	0172219
592712A	0372234
603450211353MWM	1472236

NEW HOLLAND

OE	Gates
6102366M1	0172208
615790A	0300137
619657A	0272247
627561A	1101149
627870A	0173257
632243A	0373201
632244A	0373178
632244B	0373178
634069A	1401217
64234A	0102125
662213R1	0102112
705807A	0201177
708178A	0101200
708178B	0101200
709997A	0101158
716258A	0201124
716258B	0201124
755808K	2612258
762861R1	0273217
782170A	0202209
782170B	0202209
783511A	0172219
783511B	0172219
787800A	0173224
787800B	0173224
8106679	0173208
849888A	0200109
858900A	1472227
86514496A	0702199
86514497A	1402217
86514500A	0100053
86514500B	0100053
86514501A	0100083
86514509A	1900176
86514509B	1900176
86514511A	0300266
86514511B	0300266
86514512A	0300267
86514512B	0300267
86514515A	2501076
86514519A	1901094
86514519B	1901094
86514520A	1601120
86514520B	1601120
86514523A	1401145
86514524A	1601166
86514524B	1601166
86514525A	0101168
86514525B	0101168
86514526A	0301183
86514527B	0101187
86514528A	1901196
86514529A	1401204
86514529B	1401204
86514531A	1401216
86514532A	2601233
86514599A	0272210
86514599B	0272210
86514600A	0173218
86514601A	0173213
86514602A	0173212
86514603A	0173205
86514603B	0173205
86514604A	0173192

OE	Gates
86514605A	0173191
86514605B	0173191
86514606A	0384324
86514608A	0384323
86514608B	0384323
86514609A	1472236
86514610A	0373225
86514610B	0373225
86514614A	0373201
86514614B	0373201
86514621A	0272218
86514622A	0272218
86514629A	0172208
86514629B	0172208
86514642A	0172216
86514642B	0172216
86514988A	1400087
86514988B	1400087
86516733A	0172219
86517678A	0100184
86517679B	0101172
86517751X	1425257
86517907A	1401275
86517908A	2001162
86517908B	2001162
86517912A	0102276
86517912B	0102276
86517915A	0302220
86517915B	0302220
86517926A	2601077
86517930A	1901097
86517931A	1900151
86517932A	0101242
86517932B	0101242
86517933A	0101230
86517937A	0300170
86517937B	0300170
86517938A	0300137
86517939A	1900113
86517939B	1900113
86517943A	1900196
86517943B	1900196
86518897A	0372268
86518898A	1699317
86518899A	0372262
86518900A	0372260
86518900B	0372260
86518902A	0372204
86518902B	0372204
86518919A	0173183
86518919B	0173183
86518943A	1900095
86518944A	1400115
86520126A	0702199
86520126B	0702199
86528541A	1402293
86528541B	1402293
87971217W	1585280
9612805A	0172220
9613719A	0300201
9613719B	0300201
9613723A	0100184
9613723B	0100184
9613724A	0100159

OE	Gates
9613724B	0100159
9613728A	1900132
9616745A	1902206
9616745B	1902206
9622032A	2602213
9622032B	2602213
9672186A	0101087
9672205A	1401306
9672207A	0201108
9672207B	0201108
9672216A	0173222
9672219A	1402140
9672219B	1402140
9672223A	0200140
9706589A	1472236
9800111A	0302262
98-021123	1472238
98-039673	1425243 EE-TECH
98-039783	0324198
98-042197	0326308
98-042446	0372255
98-045851	1573242
98-046076	1472236
9807449A	0372223
9807449B	0372223
9842163A	1100162
9842163B	1100162
9842808A	0310115
9845513A	0173198
9845513B	0173198
9849524A	0373179
9849524B	0373179
98927C	0302281
99439812	0372244
A32B	0300064
A56B	0200109
A78B	1900151
A938768	0173210
AA116K	0399409
AUB161355	0301303
AUB162193	0201264
B140B	1401271
B37B	2601077
B506233	0105447
B506239	0302184
B938746	1573242
BEL01	0223195
BEL02	0202268
C0NN8620B	0173210
C0NN-8620-B	0173210
C0NN8A602B	1473203
C0NN-8A602-B	1473203
C101B	0702199
C136	0202268
C338723	0173240
C7NN8620A	0173240
C7NN-8620-A	0173240
C7NN8620B	0173240
C7NN-8620-B	0173240
C9NN10C318A	0372240
C9NN-10C318-A	0372240
C9NN10C318B	1472238
C9NN-10C318-B	1472238
C9NN10C318C	0372242

NEW HOLLAND / OLIVER / PEZET / POTTINGER / RAYCO / REEKIE / REKORD/AGRAM

OE	Gates
C9NN-10C318-C	0372242
C9NN8620A	0372242
C9NN-8620-A	0372242
D2NN8620A	0372244
D2NN-8620-A	0372244
D3NN10C318C	0372242
D3NN-10C318-C	0372242
D3NN10C318D	0372242
D3NN-10C318-D	0372242
D3NN10C813C	0372240
D3NN-10C813-C	0372240
D3NN19D621B	0172206
D3NN-19D621-B	0172206
D3NN8620A	0372223
D3NN-8620-B	1472251
D4NN10C318A	0372240
D4NN-10C318-A	0372240
D5NN10C318A	0372197
D5NN-10C318-A	0372197
D5NN10C318C	0372193
D5NN-10C318-C	0372193
D5NN8620A	0372223
D5NN-8620-A	0372223
D5NN8620C	0372223
D5NN-8620-C	0372223
D5NN8620E	0372255
D5NN-8620-E	0372255
D6NN8620A	0372223
D6NN-8620-A	0372223
D6NN8620A1	0372223
D6NN-8620-A1	0372223
D6NN8620B	0272247
D6NN-8620-B	0272247
D7NN10C318A	0172195
D7NN-10C318-A	0172195
D7NN10C318B	0372240
D7NN-10C318-B	0372240
D8NN10C318AA	0372245
D8NN-10C318-AA	0372245
D8NN10C318BA	0172195
D8NN-10C318-BA	0172195
DF069791	1562235
DF091572	1602240
E128625	2787258
E1ADKN8620C	0172221
E1ADKN-8620-C	0172221
E38713	1900089
E3NN19D621AA	0372242
E3NN-19D621-AA	0372242
E4NN10C318AA	0172195
E4NN-10C318-AA	0172195
E7NN10C318AA	0372199
E7NN-10C318-AA	0372199
E7NN10C318BA	0372242
E7NN-10C318-BA	0372242
E7NN8620AA	0172221
E7NN-8620-AA	0172221
E84994	0173216
EAF8577A	0272215
EAF-8577-A	0272215
F0NN8620EA	0342140
F0NN-8620-EA	0342140
F0NN8620FA	0384325
F0NN-8620-FA	0384325

OE	Gates
F0NN8620GA	1184350
F0NN-8620-GA	1184350
F3NN8620AA	0342140
F3NN-8620-AA	0342140
F7NN20C318BA	0372242
F7NN-20C318-BA	0372242
G38715	1401113
H938775	1437204
HSS057885	1402387
J38717	0201090
J911557	0785267
J911577	0785284
J911580	0385289
JAC995721	0200143
K38718	0372244
MGP1112	0172217
ND9050	1901098
P138703	0201108
P938712	1401081
REMF6430	0172219
S938761	0143239
SBA080109049	0173195
SFD019438	0272247
U938740	0173223
V938764	1573238
W938742	1573238
X938743	0173247
Z938744	0273217
Z938767	1637196
OLIVER	
24270	1102110
55476	0102108
4818920	0373225
200007935	0372245
207000472	0173220
303075087	0422134
303076253	0372257
103926A	0173186
106093A	0272210
106821A	1573238
106834A	0173199
106841A	0173192
10A30590	0372232
10A30623	0372245
155985A	1272212
156096A	0173232
157176A	0173194
157176AA	0173194
157177A	0173209
157177AA	0173210
157187AA	0173199
157538A	0173231
157680A	0373225
157751A	0273217
158599A	0422134
158679A	0173224
160610A	0172220
162071A	0373225
162075A	0372231
162123A	0173223
166301A	0372245
167836A	0372244
167890A	1472236
167897A	0173230

OE	Gates
167910A	1473203
168052A	0273217
1K372A	0173219
1K372B	0373225
1M372A	0273217
1M372B	0373221
606670F	1472236
676865A	0173223
7A1257	0172189
7A372B	0172219
PEZET	
1141341	1417218
1142912	0372244
1142913	0372262
6212834	0137218
ND9003	0372309
ND9030	1437242
ND9317	1417231
ND9372	0337227
ND96063	1217254
ND9630	1443164
ND9762	0137235
POTTINGER	
460.0000026	2001146
460186	1118090
460198	0337278
460212	0301155
460216	0201123
460222	1901133
460223	0201152
460411	1401217
460412	1401217
460452	0325294
460453	1825298
4600000025	1401129
460.000.0025	1401129
RAYCO	
716607	2699311
750121	2699308
750605	2699310
REEKIE	
1750x25	2699314
1750x68	2699318
2660x47	2699388
RNS1026/1750x47	2699317
RNS1027/1750x75	2699319
RNS1028/2100x47	2699346
RNS1029/2520x47	2699377
RNS1060/896x25	2699253
RNS1220/2240X47	2699203
RNS1234/1750x37	2699316
REKORD/AGRAM	
20370	0302512
44271	0302656
65570	0402159
75771	0337493
518361	1401122
518364	1401129
655270	0902122
3527100	0302538
5292399	0337369
5292400	0119407
5292510	0202517
5293400	0319288

REKORD/AGRAM / ROPA / ROSTELMACH

OE	Gates
5293550	1419300
5293750	2619314
5293800	0319318
5294000	2619333
5295910	0319475
16511725	2001190
25295700	0319459
25295910	0319475
25296450	2619515
25297160	0319568
35295640	0302429
35296390	1402486
53001003	0202517
53001009	2657375
53001010	2657508
53001011	0757372
53001012	2657509
53001013	2657376
53001014	2657377
53001015	2657508
53001501	2602445
53001502	1402340
53001504	2602288
53001505	0202361
53001506	0302258
53001508	0302345
53001510	0202310
53001511	1402486
53001513	0319285
53001514	2619333
53001515	0357410
53001516	0337445
53001517	0302428
53001518	2619389
53001519	0302369
53001531	0302227
53001533	0702272
53001534	2002283
53001537	0319568
53001543	2602457
53001546	0319395
53001547	0702292
53001549	2602381
53001551	0302336
53001553	0102388
53001554	2619440
53001555	2619363
53001560	0302220
53001561	2602304
53001562	1519452
53001563	1402373
53001564	1902376
53001565	0302345
53001566	0302323
53001567	1902354
53001568	0702225
53001570	2657485
53001571	2657553
53001572	2637380
53001573	2619346
53001574	2657488
53001577	2602463
53001579	2657458
53001582	0102231

OE	Gates
53001583	2602379
53001584	0202361
53001585	2002228
53001589	0102231
53001590	2657330
53001591	2657584
53001592	2657613
53001594	1302540
53001595	1402556
53001596	0302368
53001597	2657381
53001598	2657472
53001600	2657375
53001601	2657492
53001604	2627279
53001607	0202517
53001610	2657553
53001611	0302393
53001612	0302585
53001613	0302659
53001618	0102419
53001622	0323238
53001623	2657641
53001624	0201328
53001655	0101158
53001656	0304358
53001663	0304339
53001671	0304255
53001570K	2657479
53001590K	2657330
53001600K	2657375
53001623K	2657641
53001657K	0304339
53001669K	0104278
65AG99202026	0301141
65AG99202423	0337281
65AG99203011	0102129
65AG99203012	0302134
RK01610	2657553
RK01622	0323238
ROPA	
226021	0372223
226029	1573242
226045	0302200
226053	0173219
226059	1442293
226061	0285330
ROSTELMACH	
6201005	0201092
6201006	2603269
6201015	2826318 EE-TECH
6201016	0325301 EE-TECH
6201017	2802439
6201022	2002279
6201023	0302425
6201028	0101105
6201029	0123324
6201080	2801104
6201081	0172206
6201083	2849450
6201084	0323270 EE-TECH
6201085	2849394
6201086	0224243 EE-TECH
6201087	2837174

OE	Gates
6201088	2023419 EE-TECH
6201089	2823345 EE-TECH
6201091	2319270
6201094	2825366 EE-TECH
6201096	0210131
6201097	1401127
6201166	1819202
6201191	2825189
6201195	2825383
6201196	2849290
6201197	2619352
6201246	2899383
6201247	2884427
6201249	2649360
6201251	2625326 EE-TECH
6201253	1519244
6201254	1819202
6201255	1813327
6201256	0202332
6201258	2013220
6201260	2819534
6201263	1819202
6201264	0225245 EE-TECH
6201265	0224243 EE-TECH
6201266	1837267
6201269	1437204
6201270	1519452
6201271	2319270
6201272	0337304
6201273	2811136
6201275	0337348
6201277	2619314
6201290	2603267
6201297	1419300
6201298	2619333
6201315	2901237
6201316	2823241 EE-TECH
6201317	2823255
6201318	0323377 EE-TECH
6201319	2824257
6201320	2849412
6201322	2849323
6201324	1118090
6201325	2602304
6201326	1902376
6201327	0172220
6201328	2819482
6201329	1224272 EE-TECH
6201330	0323270 EE-TECH
6201335	1524314 EE-TECH
6201339	0337278
6201340	2823493
6201341	1225316
6201342	1402358
6201343	0402155
6201344	0402170
6201345	0202182
6201346	0302200
6201347	0702272
6201348	1402532
6201349	2002253
6201350	1402451
6201351	0110126
6201352	2502099

OE	Gates
6201353	1903346
6201354	2803403
6201355	2001190
6201356	0101454
6201357	0101468
6201358	0202268
6201362	1623311 EE-TECH
6201363	1823248
6201371	0172214
6201373	0110288
6201375	0723443
6201376	1837245
6201377	2849346
6201378	1423364
6201380	0325248
6201381	0200098
6201382	1423198
6201383	2823218
6201384	1449760
6201385	2319270
6201387	1118081
6201391	2825386
6201392	1623311 EE-TECH
6201393	3023228
6201394	1225340
6201396	0137218
6201397	0223204
6201399	2824496
6201400	1823326 EE-TECH
6201401	0300266
6201403	1499855
6201404	1423290
6201405	0201112
6201406	1900245
6201407	0323426
6201408	2826211
6201409	0723443
6201410	3023182
6201411	0372271
6201412	1601120
6201414	1472236
6201415	1424200
6201416	☎
6201417	0300256
6201418	☎
6201419	0323233 EE-TECH
6201420	2823345 EE-TECH
6201421	0337227
6201424	1423290
6201425	☎
6201426	0323233 EE-TECH
6201428	0137367
6201432	0100357
6201437	0337227
6201460	☎
6201461	0172219
6201486	0300266
6201489	1900095
6201493	1223167
6201495	1902376
6201517	2826388
6201521	2623298
6201522	0223318
6201523	2623194

OE	Gates
6201524	0723248
6201525	0123398
6201526	1837267
6201527	1423211
6201528	☎
6201529	1425378 EE-TECH
100237862	2319270
100758565	0137218
100831575	☎
101475387	2853277
101616640	0724325 EE-TECH
101616643	0787324
101616645	1118081
101616646	0337341
101743194	2023246
101747865	2826364
101762196	0300266
101762228	1900095
101767792	1423396 EE-TECH
101767796	2823241 EE-TECH
101767798	1423210
101859554	1623297 EE-TECH
101872236	1424560
101881035	2887324
101909697	0323191
102030919	☎
102200433	0225324 EE-TECH
ROUSSEAU	
4100552	1519244
SAMPO ROSENLEW	
493602	☎
600843	☎
613101	☎
613104	0172201
613107	☎
613108	1272212
613113	2017103
613116	0100083
613122	1472227
613124	1472236
613126	0200105
613128	0372244
613129	0201155
613130	☎
613131	2600117
613147	1400153
613148	0100159
614109	2001086
614115	1601103
614122	1601120
614124	1401129
614125	1401129
614126	1901133
614127	1901136
614129	1401145
614131	1201153
614132	2001146
614133	☎
614134	0101158
614136	2001162
614140	2001178
614141	0101184
614143	2001190
614144	0101200

OE	Gates
614146	1601205
614147	1601218
614148	0201215
614149	1401209
614150	1401234
614152	0101242
614157	0401279
614166	1401378
614172	1401405
614173	1601185
614208	1301116
614212	0201124
614214	1401127
614215	2001127
614216	1901133
614217	2001129
614218	☎
614222	2001143
614224	0301147
614225	0101151
614226	0101151
614227	0301155
614242	1601185
614246	0101200
614260	0101287
615104	0302136
615105	0902122
615108	0102125
615109	0202139
615110	2002135
615115	☎
615116	1602150
615121	0202172
615122	0302179
615123	0202182
615124	0302197
615127	0202209
615128	0202209
615129	0302220
615130	2002211
615131	1602240
615133	0302251
615134	2002253
615135	0502215
615139	2002279
615140	2002283
615141	2602287
615142	2002279
615146	1402336
615147	1902376
615150	0102406
615151	0402437
615155	1602396
615159	0202310
615160	☎
615161	2002179
615162	2002167
615163	1202193
615164	0202222
615165	2002342
615166	2002323
615167	0102231
615168	1902204
615169	0102189

SAMPO ROSENLEW

OE	Gates
615170	2002190
615173	0302200
615175	1402127
615177	2002365
615179	0702225
615180	2002228
615181	2002237
615182	2002253
615184	2002298
615185	2002342
615186	0202305
615187	1902351
615189	2619389
615190	0302419
619041	2010306
619044	2010251
619050	2023186
619054	2023212
619055	1423216
619059	2004311
619062	2004345
619065	2023280 EE-TECH
619070	2005364
619071	2005364
619077	2023197
619080	2024241 EE-TECH
619081	0123239
619082	2023246
619085	2023474
619086	2024241 EE-TECH
619087	2724161
619088	☎
619090	2024368
619091	2023199
619092	2023280 EE-TECH
619093	2023419 EE-TECH
619094	2023246
619095	2025370
619096	1423476
619097	2025401
619098	1124342
619146	2013144
619168	2012273
619169	2013164
619170	0110162
619173	2012156
619174	0112166
619175	2012166
619178	0112169
619179	2013171
619180	2013220
619181	2009158
619182	0212169
619183	2012167
619185	0111232
619188	2009173
619189	2009200
619190	2013171
619191	2013164
619192	0312169
634633	0172217
634635	1400153
634640	2001162
634649	0102176

OE	Gates
636679	0101242
657101	CHAIN
657110	CHAIN
657122	CHAIN
657129	CHAIN
684121350	1472236
2R593893A	0111232
3R621546	0112166
3R644247A	0201215
3R661600R	0110162
3R661600RA	0110162
3R680791	1902376
3R680812A	2024368
3R680812B	2024368
3R687074	2013164
3R687271	2010250
3R693412	0302248
3R693890	2010305
3R694259	2005364
3T89177F	2013145
4R634644	1401234
4R634644A	1401234
4R634650A	0302197
4R634650B	0302197
4R634655	1902376
4R634655A	1902376
4R644247A	0201215
4R652307A	0702212
4R680812B	2024368
4R686977A	1401234
4R688204	0302419
4R694251	2604348
4R694252A	1601218
4R694253	0202209
4R694254	0101151
4R694255	0202139
4R694255A	0202139
4R694256	2002298
4R694257	1902204
4R694258A	2043189
4R694260A	2043185
4R694261A	1272212
4R694262	1901115
4R694263	0101151
4R694264	0101200
4R694265A	1401127
4R694294	0302248
4R694333	2001127
4R694643	1201153
4R694943	1472227
4R696651	2024368
4R696652	2027266
4R696653	1423198
4R696654	2023280 EE-TECH
4R696655	1523417 EE-TECH
4R696656	2023246
4R696657	0102176
4R696658	2023212
4R696659	2002190
4R696660	2005364
4R696661	0709099
4R696662	2002342
4R696663	2027370
4R696665	1902204

OE	Gates
4R698062	1601185
4R698063	1401129
4R698063A	2001129
4R700327	2001143
4R700328	2101142
4R701183	0312169
4R706495	0301147
R593893	0111232
R615865	2024241 EE-TECH
R621546	0112166
R634644	1401234
R634650	0302197
R634650A	0302197
R634655	1902376
R644247	0201215
R644247A	0201215
R652307	0702212
R652307A	0502215
R661600	0110162
R680791	1902376
R680812	2024368
R680812B	2024368
R686977	1401234
R687074	2013164
R687918	☎
R688204	0302419
R693412	0302248
R693890	2010305
R694251	2604348
R694252	1601218
R694252A	2001127
R694253	0202209
R694254	0101151
R694255	0202139
R694255A	0202139
R694256	2002298
R694257	1902204
R694258	2043189
R694259	2005364
R694260	2043185
R694261	1272212
R694262	1901115
R694263	0101151
R694264	0101200
R694265	1401127
R694294	0302248
R694333	2001127
R694643	1201153
R694943	1472227
R696651	2024368
R696652	2027266
R696653	1423198
R696654	2023280 EE-TECH
R696655	1523417 EE-TECH
R696656	2023246
R696657	0102176
R696658	2023212
R696659	2002190
R696660	2005364
R696661	0709099
R696662	2002342
R696663	2027370
R696665	1902204
R698062	1601185

SAMPO ROSENLEW / SEMANATOAREA / SHEPPARD / SISU DIESEL / SPITOR / STOLL / VALTRA

OE	Gates
R698063	2001129
R700327	2001143
R700328	2101142
R701183	0312169
R706495	0301147
T89177F	2013145
SEMANATOAREA	
12.5X10X1175LE	0372223
13X8X1400LP	1900106
140X6X3460LE	1981410
17X11X1180LP	0201092
17X11X1554LP	1601120
17X13X1250LP	2137163
17X13X1443LP	2137177
17X14X1800LP	2101138
22X14X1460LP	0302313
22X14X1630LP	0202126
22X14X1800LP	0102137
22X14X2000LP	0302154
22X14X2120LP	0102161
22X14X3000LP	0702225
22X14X3100LP	0202235
22X14X3150LP	1602240
22X14X3300LP	0302248
22X14X3450LP	0202261
22X14X3600LP	0202275
22X14X4100LP	0202310
22X18X2000LP	2119184
22X18X2120LP	1519193
22X18X2800LP	1519244
22X18X3000LP	2119259
2B/HB2650LE	1423240
2B/HB3300LE	1524289
2B/HB4250LE	2124361
2C/HC3185LE	0227286
32X19X3115LP	0203240
32X19X3700LP	1903286
32X19X4350LP	2103333
35X12X1340LP	1961209
40X20X1750LI	1411159
45X20X1800LI	☎
45X20X2750LI	1912236
45X20X2950LI	1512251
45X20X3070LI	0812260
4B/HB3250LE	2124287
4B/HB3700LE	0724321 EE-TECH
4B/HB3950LE	0124338
50X20X1983LI	0713182
51X20X1983LI	0713182
55X20X1850LI	2013171
SHEPPARD	
400050	0173247
400251	1401110
SISU DIESEL	
684101025	0173214
684101100	0173219
684101125	0373221
684120825	0372197
684120875	0172201
684120900	0372203
684120950	0172206
684120975	0172208
684121000	0272210
684121075	0172216

OE	Gates
684121100	0272218
684121175	0372223
684121200	0172225
684121225	1472227
684121250	0422134
684121275	0372231
684121300	0372232
684121325	0372234
684121350	1472236
684121375	1472238
684121450	0372244
684121475	0372245
684121500	0272247
684121525	0122155
684121550	1472251
684121625	0372257
684121650	0372258
685061623	0384279
685061650	1984281
685061725	0284286
685081220	0285251
685081315	1485258
685081660	0785284
685081730	2685289
685081745	2785290
685081770	0285292
685081785	0285293
685081800	0285294
685081850	0285297
685081920	0285303
685082030	0285311
685082100	0285316
685082200	0385323
685082300	0385331
685121555	0189283
685121570	1389285
685121585	1489286
685121610	0289288
685121725	0289296
685121800	0289301
685121845	0289304
685121860	0289305
685121880	0189308
685121905	2689310
685121945	0289312
685122020	2689318
684121400A	0372240
684121425A	0372242
684121450A	0372244
SPITOR	
161.891	2685308
163.081	2685294
240.702	2685314
B-2004	2623342
B-2005	1523417 EE-TECH
B-2006	2623491
B-2017	0223572
B-2026	2623506
B-2035	2623439
B-2036	2623513
B-2036CK	2623509
B-2037	2623586
B-2054	2623379
B-2056	0223526

OE	Gates
B-2057	2623602
B-2065	0323462
B-2085	1423476
B-2523	1923287 EE-TECH
B-2524	2623361
B-2553	1923309 EE-TECH
B-2573	0123324
B-2574	0123398
B-2576	2623546
B-2576K	2623532
B-2582	1923257 EE-TECH
B-2843	0223304
B-3054	2624381
B-3885	2624484
C-2065	2627469
C-2192	2627270
C-2363K	2627323
C-2553	2627317
L20-0212	2685318
STOLL	
425550	1402217
0425550	1402217
441860	1454282
0441860	1454282
445510	0137235
0445510	0137235
462680	1401081
0462680	1401081
464580	2602194
0464580	2602194
465530	0302179
465620	2610346
0465620	2610346
465930	1602396
0465930	1602396
467010	1401134
0467010	1401134
469800	0101066
0469800	0101066
469810	2602103
0469810	2602103
470590	0102415
0470590	0102415
480490	1902102
0480490	1902102
484640	0201173
0484640	0201173
1117400	1443145
1125960	1137171
13615405	2602194
13619703	1437204
13619707	0137235
13629732	1437242
VALTRA	
5007231	0422134
5007388	0173231
5007661	0172217
5009066	0173257
5017160	0373258
5024987	1472251
5025737	0172214
5026279	0172208
5027286	0172217
5030946	0272210

VALTRA / VERSATILE / VICON / VOLVO / YANMAR / ZETOR / ZMAJ

OE	Gates
5031726	0172216
5074724	0172206
684120900	0372203
684121025	1272212
684121100	0272218
684121425	0372242
684121450	0372244
684121525	0122155
684121550	1472251
685061650	1984281
685061725	0284286
685081315	1485258
685081730	2685289
685081785	0285293
685121585	1489286
685121905	2689310
685122020	2689318
921001330	1472238
921001599	0372234
VERSATILE	
20974	0172217
34922	1472238
47613	0101087
63727	0172225
86452	0272215
178428	0172217
178434	0373178
178598	0201096
178608	0102101
196937	1601103
200549	0172225
201927	1472238
202046	0372245
202047	0272247
205913	1888236
3903091	0785267
VICON	
99202424	0337281
99202425	0337281
ND96120	0737236
ND96123	2637298
VF06580119N	1417242
VGND9909	1118090
VOLVO	
434746	☎
453247	0312265
453248	0712295
453249	1512193
4440913	0112225
4460969	0239321
4460970	2011184
4461990	☎
4463092	1562235
4463122	1910179
4516225	☎
YANMAR	
121023	0372199
121522	0372204
124064	0172192
124240	0272210
124756	0172208
12102342290	0372199
12406442290	0172192

OE	Gates
ZETOR	
974312	0201097
62455705	0201092
84013901	0173231
84013902	0173231
ZMAJ	
71155	2602213
690104	0810190
690106	0212267
690112	1601103
710156	2604421
713946	0112142
713975	2839301
720211	2604348
7113107	0102683
830162032	0337220
830171419	2601106
830171565	0301118
830171959	0301147
830172046	0201155
830172450	0101184
830172800	1401209
830221900	2602145
830222330	0102176
830222560	2602194
830222820	2602213
830222900	0302219
830222949	0202222
830223085	0102231
830223238	2602244
830223640	0202275
830223815	2602287
830225000	1902376
830225600	2602420
830225760	0302424
830227060	0202528
830323224	0203245
830324840	0203366
831225600	2605425
832251415	2609122
832251583	2609135
832321213	0310109
832321540	2610133
832321795	0310153
832451698	2612149
832451715	0212150
832451755	2612153
832451810	2612157
832451964	2012169
832453165	2612258
832453220	0312262
832453380	0312280
832502880	1113237
832503190	2613261
832602130	0315188
833176310	2623512
833341369	2623145
833342046	1423196
833343180	2023280 EE-TECH
833361300	1900097
833362380	0723221 EE-TECH
833362410	2623222 EE-TECH
833363610	1623311 EE-TECH
833441875	2627190

OE	Gates
833442330	2627224
833442900	2027266
833443750	2627330
833472760	2627256
833551959	2624191
833553180	1424282
833553335	2624293
833553520	0224306 EE-TECH
833553710	0724321 EE-TECH
833553750	2624322
833553810	1824328 EE-TECH
833554450	2024376
833554460	2024376
833683750	2603284
833743810	2625330
834003492	0139333
837171980	1101149
837222330	0327223
837223100	0202235
837223640	0202275
837323750	2603284
838173519	1901188
970005240	2612153
9690000102	2630309
9690100107	0112184
9700005240	0112152
9710003946	0112142
9720000209	2630302
083-016-2032	0337220
083-017-1419	2601106
083-017-1565	0301118
083-017-1959	0301147
083-017-2046	0201155
083-017-2450	0101184
083-017-2800	1401209
083-022-1900	2602145
083-022-2330	0102176
083-022-2560	2602194
083-022-2820	2602213
083-022-2900	0302219
083-022-2949	0202222
083-022-3085	0102231
083-022-3238	2602244
083-022-3640	0202275
083-022-3815	2602287
083-022-5000	1902376
083-022-5600	2602420
083-022-5760	0302424
083-022-7060	0202528
083-032-3224	0203245
083-032-4840	0203366
083-122-5600	2605425
083-225-1415	2609122
083-225-1583	2609135
083-232-1213	0310109
083-232-1540	2610133
083-232-1795	0310153
083-245-1698	2612149
083-245-1715	0212150
083-245-1755	2612153
083-245-1810	2612157
083-245-1964	2012169
083-245-3165	2612258
083-245-3220	0312262

ZMAJ

OE	Gates
083-245-3380	0312280
083-250-2880	1113237
083-250-3190	2613261
083-260-2130	0315188
083-317-6310	2623512
083-334-1369	2623145
083-334-2046	1423196
083-334-3180	2023280 EE-TECH
083-336-1300	1900097
083-336-2380	0723221 EE-TECH
083-336-2410	2623222 EE-TECH
083-336-3610	1623311 EE-TECH
083-344-1875	2627190
083-344-2330	2627224
083-344-2900	2027266
083-344-3750	2627330
083-347-2760	2627256
083-355-1959	2624191
083-355-3180	1424282

OE	Gates
0833553180K	1424282
083-355-3180K	1424282
083-355-3335	2624293
083-355-3520	0224306 EE-TECH
0833553520K	0224306 EE-TECH
083-355-3520K	0224306 EE-TECH
083-355-3710	0724321 EE-TECH
083-355-3750	2624322
083-355-3810	1824328 EE-TECH
083-355-4450	2024376
083-355-4460	2024376
083-368-3750	2603284
083-374-3810	2625330
083-400-3492	0139333
083-717-1980	1101149
083-722-2330	0327223
083-722-3100	0202235
083-722-3640	0202275
083-732-3750	2603284

OE	Gates
083-817-3519	1901188
690101/1	0381385
69-0101/1	0381385
69-0104	0810190
69-0106	0212267
690107/1	2612183
69-0107/1	2612183
69-0112	1601103
690116/1	0102112
69-0116/1	0102112
71-0156	2604421
71-13107	0102683
71-155	2602213
71-3946	0112142
71-5240	0112152
72-0211	2604348
970-000-5240	0112152
971-000-3946	0112142

DRIVEN BY POSSIBILITY™

CUSTOMER EXPERIENCE TEAM

Korte Keppestraat 21/51
B-9320 EREMBODEGEM
Mail: inforequest@gates.com

The manufacturers reserve the right to amend details where necessary.

E2/20142 - © Gates Corporation 2020 - Printed in Belgium - 06/20.