DIMENSIONS OF POLY-V TAPER-LOCK® PULLEYS

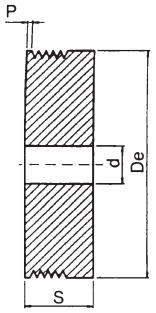

EXECUTION 1

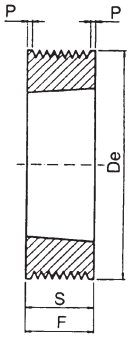

EXECUTION 2

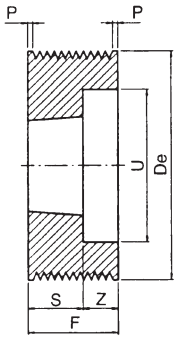

EXECUTION 3

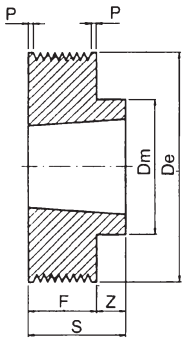

EXECUTION 4

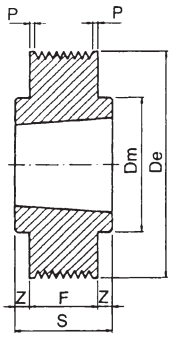

EXECUTION 5

PPV – L CROSS-SECTION

De	Exec.	No. of Grooves	Bush	S	Z	Dm	U	
	1	8	-	32	-	-	-	12
40	1	12	-	41.5	-	-	-	12
	1	16	-	51	-	-	-	12
	1	8	-	32	-	-	-	12
45	1	12	-	41.5	-	-	-	12
	1	16	-	51	-	-	-	12
	1	8	-	32	-	-	-	12
50	1	12	-	41.5	-	-	-	12
	1	16	-	51	-	-	-	12
	2	8	1108	23	-	-	-	-
56	1	12	-	41.5	-	-	-	12
	1	16	-	51	-	-	-	12
	2	8	1108	23	-	-	-	-
63	3	12	1108	23	9.5	-	46	-
	1	16	-	51	-	-	-	12
	2	8	1108	23	-	-	-	-
71	3	12	1108	23	9.5	-	46	-
	2	16	1215	42	-	-	55	-
	2	8	1108	23	-	-	-	-
75	3	12	1610	26	6.5	-	60	-
	3	16	1610	26	16	-	60	-
	4	8	1610	26	3	70	-	-
80	3	12	1610	26	6.5	-	60	-
	3	16	1610	26	16	-	60	-
	4	8	1610	26	3	70	-	-
85	3	12	1610	26	6.5	-	60	-
	3	16	1610	26	16	-	60	-
	4	8	1610	26	3	70	-	-
90	3	12	1610	26	6.5	-	74	-
	3	16	1610	26	16	-	74	-
	4	8	1610	26	3	82	-	-
95	3	12	1610	26	6.5	-	74	-
	3	16	1610	26	16	-	74	-
	4	8	1610	26	3	82	-	-
100	3	12	1610	26	6.5	-	74	-
	3	16	1610	26	16	-	74	-

De	Exec.	No. of Grooves	Bush	S	Z	Dm	U
	4	8	1610	26	3	82	-
106	3	12	1610	26	6.5	-	88
	3	16	1610	26	16	-	88
	4	8	1610	26	3	90	-
112	3	12	1610	26	6.5	-	88
	3	16	1610	26	16	-	88
	4	8	1610	26	3	90	-
118	3	12	2012	32	0.5	-	98
	3	16	2012	32	10	-	98
	4	8	1610	26	3	90	-
125	3	12	2012	32	0.5	-	98
	3	16	2012	32	10	-	98
	4	8	1610	26	3	90	-
132	3	12	2012	32	0.5	-	98
	3	16	2012	32	10	-	98
	4	8	1610	26	3	90	-
140	4	12	2517	45	12.5	120	-
	4	16	2517	45	3	120	-
	5	8	2012	32	4.5	110	-
160	4	12	2517	45	12.5	120	-
	4	16	2517	45	3	120	-
	5	8	2012	32	4.5	110	-
180	5	12	2517	45	6.25	120	-
	5	16	2517	45	1.5	120	-
	5	8	2012	32	4.5	110	-
200	5	12	2517	45	6.25	120	-
	5	16	2517	45	1.5	120	-
	5	8	2012	32	4.5	110	-
224	5	12	2517	45	6.25	120	-
	5	16	2517	45	1.5	120	-
	5	8	2012	32	4.5	110	-
250	5	12	2517	45	6.25	120	-
	5	16	2517	45	1.5	120	-

No. of Grooves	F±0.1	P
8	23	3.31
12	32.5	3.38
16	42	3.45

DIMENSIONS OF POLY-V TAPER-LOCK® PULLEYS

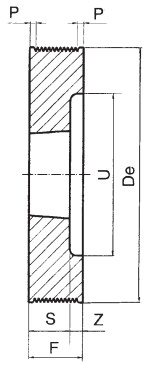

EXECUTION 3

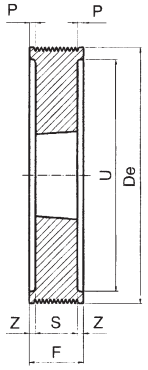

EXECUTION 6

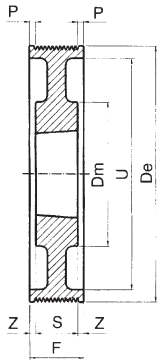

EXECUTION 7

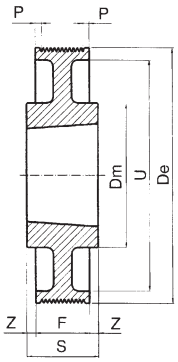

EXECUTION 8

PPV – L CROSS-SECTION

De	Exec.	No. of Grooves	Bush	S	Z	Dm	U
	3	8	1210	26	22	-	56
75	3	12	1215	42	25	-	56
	3	8	1210	26	22	-	56
80	3	12	1215	42	25	-	56
	3	8	1210	26	22	-	61
85	3	12	1215	42	25	-	61
	6	16	1215	42	22	-	61
	3	8	1610	26	22	-	66
90	3	12	1615	42	25	-	66
	6	16	1615	42	22	-	66
	3	8	1610	26	22	-	71
95	3	12	1615	42	25	-	71
	6	16	1615	42	22	-	71
	3	8	1610	26	22	-	76
100	3	12	2012	32	35	-	79
	6	16	2012	32	27	-	79
	3	8	1610	26	22	-	82
106	3	12	2012	32	35	-	82
	6	16	2012	32	27	-	82
	3	8	1610	26	22	-	88
112	3	12	2012	32	35	-	88
	6	16	2012	32	27	-	88
	3	8	2012	32	16	-	94
118	6	12	2517	45	11	-	97
	6	16	2517	45	20.5	-	97
	3	8	2012	32	16	-	101
125	6	12	2517	45	11	-	101
	6	16	2517	45	20.5	-	101
	3	8	2012	32	16	-	108
132	6	12	2517	45	11	-	108
	6	16	2517	45	20.5	-	108

De	Exec.	No. of Grooves	Bush	S	Z	Dm	U
	3	8	2517	45	3	82	116
140	6	12	2517	45	11	-	116
	6	16	2517	45	20.5	-	116
	3	8	2517	45	3	-	126
150	6	12	2517	45	11	-	126
	6	16	2517	45	20.5	-	126
	3	8	2517	45	3	-	136
160	6	12	2517	45	11	-	136
	6	16	3020	52	17	-	136
	3	8	2517	45	3	-	146
170	6	12	2517	45	11	-	146
	6	16	3020	52	17	-	146
	7	8	2517	45	1.5	120	156
180	7	12	2517	45	11	120	156
	6	16	3020	52	17	-	156
	7	8	2517	45	1.5	120	176
200	7	12	3020	52	7.5	146	176
	7	16	3020	52	17	146	176
	7	8	2517	45	1.5	120	202
224	7	12	3020	52	7.5	146	202
	7	16	3020	52	17	146	202
	8	8	3020	52	2	146	228
250	7	12	3020	52	7.5	146	228
	8	16	3535	89	1.5	178	228
	8	8	3020	52	2	146	256
280	7	12	3020	52	7.5	146	256
	8	16	3535	89	1.5	178	256
	8	8	3020	52	2	146	285
315	8	12	3535	89	11	178	285
	8	16	3535	89	1.5	178	285

No. of Grooves	F±0.1	P
8	48	7,55
12	67	7,65
16	86	7,75

POWERGRIP® TOOTHED PULLEYS FOR SYNCHRONOUS BELTS

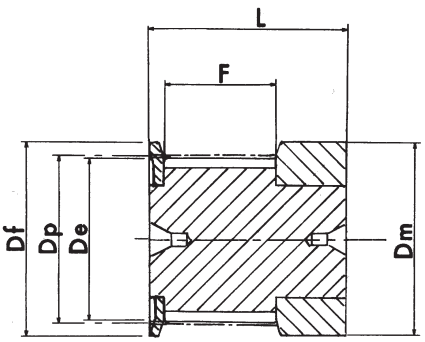

execution 0F

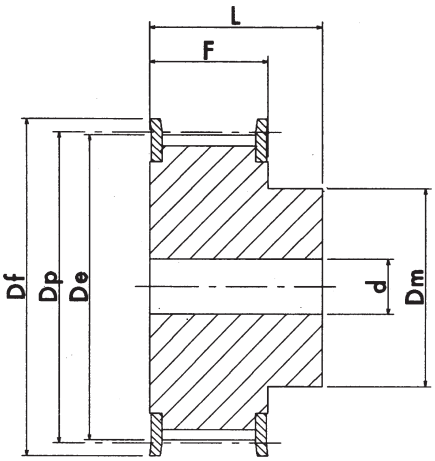

execution 1F

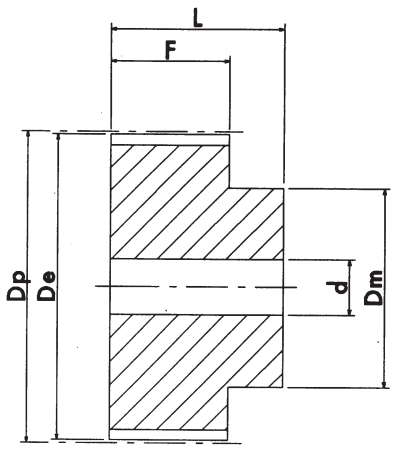

execution 2

MXL 025 PITCH 0.080" (2.032 mm.)

CHARACTERISTICS		TYPE	EXEC.	No. of TEETH	Dp PITCH LINE	De EXTERNAL	Df FLANGE	Dm HUB	F	L	d	FLANGE No.
ALUMINIUM	WITH FLANGE	16 MXL 025	0F	16	10.35	9.84	15	15	8.5	16	-	502
		18 MXL 025	0F	18	11.64	11.12	16	16	8.5	16	-	503
		20 MXL 025	0F	20	12.94	12.43	16	16	8.5	16	-	503
		22 MXL 025	1F	22	14.23	13.72	17	10	11	16	3	504
		24 MXL 025	1F	24	15.52	15.01	20	10	11	16	3	505
		28 MXL 025	1F	28	18.11	17.60	25	11	11	16	3	506
		30 MXL 025	1F	30	19.40	18.90	25	12	11	16	4	506
		32 MXL 025	1F	32	20.70	20.19	26	14	11	16	4	507
		36 MXL 025	1F	36	23.29	22.78	28	16	11	16	4	508
		40 MXL 025	1F	40	25.87	25.37	32	18	11	16	4	509
		42 MXL 025	1F	42	27.17	26.67	32	18	11	16	5	509
		44 MXL 025	1F	44	28.46	27.95	36	18	11	16	5	510
	WITHOUT FLANGE	48 MXL 025	2	48	31.05	30.54	-	20	11	16	5	-
		60 MXL 025	2	60	38.81	38.30	-	24	11	16	5	-
		72 MXL 025	2	72	46.57	46.06	-	25	11	16	6	-

POWERGRIP® TOOTHED PULLEYS FOR SYNCHRONOUS BELTS

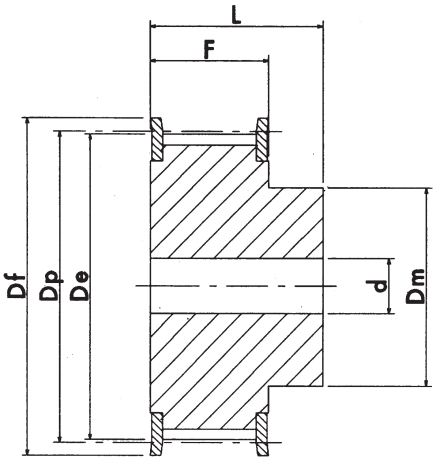

execution 1F

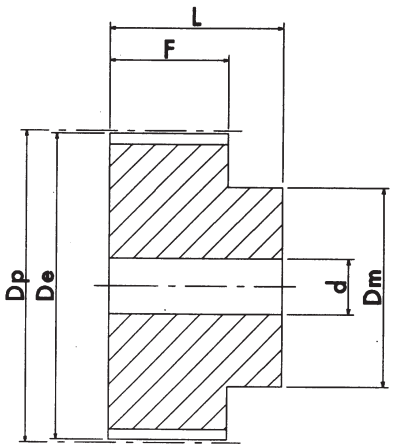

execution 2

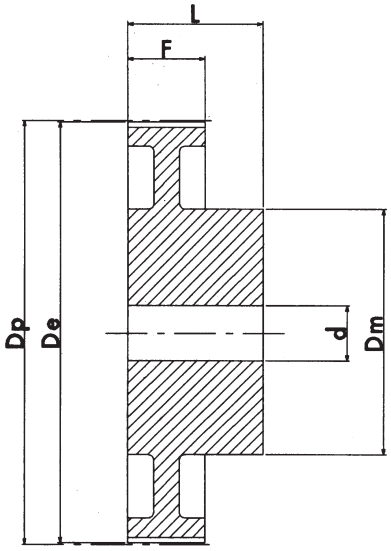

execution 3

XL 037 PITCH 1/5" (5.08 mm.)

CHARACTERISTICS		TYPE	EXEC.	No. of TEETH	Dp PITCH LINE	De EXTERNAL	Df FLANGE	Dm HUB	F	L	d	FLANGE No.
STEEL/ALUMINIUM	WITH FLANGE	10 XL 037	1F	10	16.17	15.66	23.0	9.5	14.3	20	-	1
		11 XL 037	1F	11	17.79	17.28	23.0	9.5	14.3	20	-	1
		12 XL 037	1F	12	19.40	18.90	25.0	10	14.3	20	-	2
		13 XL 037	1F	13	21.02	20.51	25.0	10	14.3	20	-	2
		14 XL 037	1F	14	22.64	22.13	28.0	15	14.3	20	-	4
		15 XL 037	1F	15	24.26	23.75	28.0	15	14.3	20	-	4
		16 XL 037	1F	16	25.87	25.36	32.0	16	14.3	20	-	5
		17 XL 037	1F	17	27.49	26.98	32.0	20	14.3	20	-	6
		18 XL 037	1F	18	29.11	28.60	35.0	20	14.3	20	-	7
		19 XL 037	1F	19	30.72	30.22	35.0	20	14.3	22	-	7
		20 XL 037	1F	20	32.34	31.83	38.0	23.5	14.3	22	-	9
		21 XL 037	1F	21	33.96	33.45	38.0	23.5	14.3	22	-	9
		22 XL 037	1F	22	35.57	35.07	41.0	25	14.3	22	6	10
		24 XL 037	1F	24	38.81	38.30	44.0	30	14.3	22	6	12
		26 XL 037	1F	26	42.04	41.53	48.0	30	14.3	22	8	11
		27 XL 037	1F	27	43.66	43.15	48.0	30	14.3	22	8	11
		28 XL 037	1F	28	45.28	44.77	51.0	34	14.3	22	8	16
		30 XL 037	1F	30	48.51	48.00	54.0	38	14.3	22	8	18
		32 XL 037	1F	32	51.74	51.24	57.0	38	14.3	25	8	20
		34 XL 037	1F	34	54.98	54.47	61.0	38	14.3	25	8	22
		35 XL 037	1F	35	56.60	56.09	61.0	38	14.3	25	8	22
ALUMINIUM	WITHOUT FLANGE	36 XL 037	2	36	58.21	57.70	-	45	14.3	25	8	-
		38 XL 037	2	38	61.45	60.94	-	45	14.3	25	8	-
		40 XL 037	2	40	64.68	64.17	-	45	14.3	25	8	-
		42 XL 037	2	42	67.91	67.41	-	45	14.3	25	8	-
		44 XL 037	2	44	71.15	70.64	-	45	14.3	25	8	-
		48 XL 037	3	48	77.62	77.11	-	45	14.3	25	10	-
		60 XL 037	3	60	97.02	96.51	-	45	14.3	25	10	-
		72 XL 037	3	72	116.42	115.92	-	45	14.3	25	10	-

POWERGRIP® TOOTHED PULLEYS FOR SYNCHRONOUS BELTS

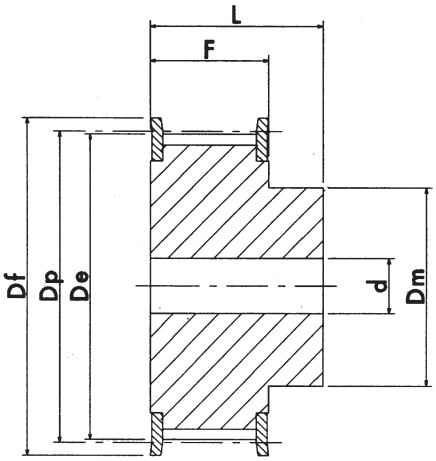

execution 1F

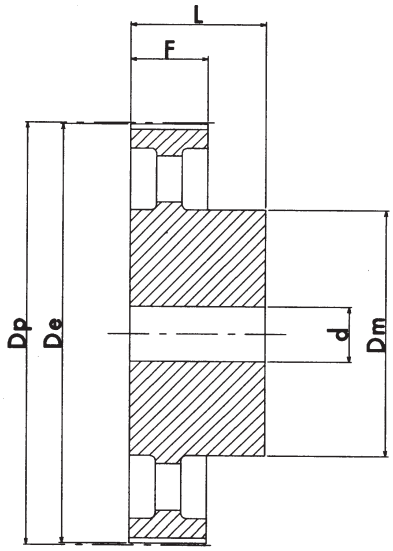

execution 4

L 050 PITCH 3/8" (9.52 mm.)

CHARACTERISTICS		TYPE	EXEC.	No. of TEETH	Dp PITCH LINE	De EXTERNAL	Df FLANGE	Dm HUB	F	L	d	FLANGE No.
STEEL	WITH FLANGE	10 L 050	1F	10	30.33	29.56	37.00	20	19.0	28	8	50
		11 L 050	1F	11	33.35	32.59	37.00	22	19.0	30	8	50
		12 L 050	1F	12	36.37	35.62	43.00	24	19.0	30	8	52
		13 L 050	1F	13	39.41	38.65	44.00	28	19.0	30	8	83
		14 L 050	1F	14	42.44	41.68	48.00	28	19.0	30	8	54
		15 L 050	1F	15	45.48	44.72	51.00	34	19.0	30	8	55
		16 L 050	1F	16	48.51	47.75	54.00	36	19.0	32	8	56
		17 L 050	1F	17	51.54	50.78	57.00	36	19.0	32	10	57
		18 L 050	1F	18	54.59	53.81	60.00	40	19.0	32	10	58
		19 L 050	1F	19	57.61	56.84	64.00	40	19.0	32	10	59
		20 L 050	1F	20	60.63	59.88	66.50	40	19.0	32	10	60
		21 L 050	1F	21	63.68	62.91	70.00	45	19.0	32	10	61
		22 L 050	1F	22	66.70	65.94	75.00	45	19.0	32	10	62
		23 L 050	1F	23	69.73	68.97	79.00	55	19.0	32	10	63
		24 L 050	1F	24	72.77	72.00	79.00	55	19.0	32	10	63
		25 L 050	1F	25	75.80	75.04	82.50	58	19.0	32	10	64
		26 L 050	1F	26	78.84	78.07	86.00	58	19.0	32	11	65
		27 L 050	1F	27	81.86	81.10	86.00	58	19.0	32	11	65
		28 L 050	1F	28	84.89	84.13	91.00	58	19.0	32	11	66
		30 L 050	1F	30	90.96	90.20	97.00	70	19.0	32	11	68
		32 L 050	1F	32	97.03	96.26	102.00	70	19.0	32	11	70
		33 L 050	1F	33	100.05	99.29	106.00	70	19.0	32	11	71
		34 L 050	1F	34	103.08	102.32	112.00	70	19.0	32	11	72
		35 L 050	1F	35	106.12	105.35	112.00	70	19.0	32	11	72
		36 L 050	1F	36	109.14	108.39	115.00	70	19.0	32	11	74
		40 L 050	1F	40	121.29	120.51	128.00	70	19.0	32	11	78
		42 L 050	1F	42	127.34	126.57	135.00	70	19.0	32	11	80
		44 L 050	1F	44	133.40	132.64	142.00	70	19.0	32	11	81
		45 L 050	1F	45	136.44	135.67	142.00	70	19.0	32	11	81
		48 L 050	1F	48	145.54	144.77	150.00	70	19.0	32	11	85
CAST-IRON	WITHOUT FLANGE	50 L 050	4	50	151.60	150.83	-	70	19.0	32	14	-
		52 L 050	4	52	157.66	156.90	-	70	19.0	32	14	-
		56 L 050	4	56	169.79	169.02	-	70	19.0	32	14	-
		57 L 050	4	57	172.82	172.06	-	70	19.0	32	14	-
		60 L 050	4	60	181.92	181.15	-	75	19.0	42	14	-
		72 L 050	4	72	218.29	217.53	-	75	19.0	42	14	-
		84 L 050	4	84	254.69	253.92	-	75	19.0	42	14	-
		96 L 050	4	96	291.06	290.30	-	75	19.0	42	14	-

POWERGRIP® TOOTHED PULLEYS FOR SYNCHRONOUS BELTS

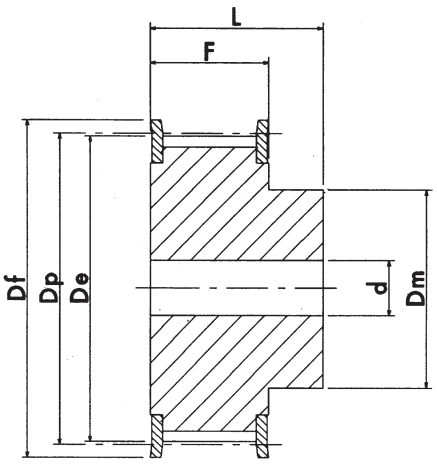

execution 1F

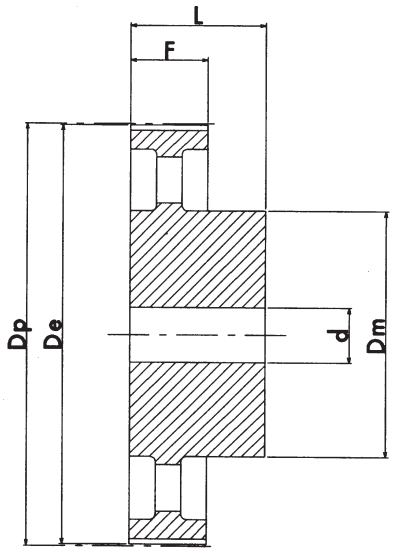

execution 4

L 075 PITCH 3/8" (9.52 mm.)

CHARACTERISTICS		TYPE	EXEC.	No. of TEETH	Dp PITCH LINE	De EXTERNAL	Df FLANGE	Dm HUB	F	L	d	FLANGE No.
STEEL	WITH FLANGE	10 L 075	1F	10	30.33	29.56	37.0	20	25.4	38	8	50
		11 L 075	1F	11	33.35	32.59	37.0	22	25.4	38	8	50
		12 L 075	1F	12	36.37	35.62	43.0	24	25.4	38	8	52
		13 L 075	1F	13	39.41	38.65	44.0	28	25.4	38	8	83
		14 L 075	1F	14	42.44	41.68	48.0	28	25.4	38	11	54
		15 L 075	1F	15	45.48	44.72	51.0	34	25.4	38	11	55
		16 L 075	1F	16	48.51	47.75	54.0	36	25.4	38	11	56
		17 L 075	1F	17	51.54	50.78	57.0	36	25.4	38	11	57
		18 L 075	1F	18	54.59	53.81	60.0	40	25.4	38	11	58
		19 L 075	1F	19	57.61	56.84	64.0	40	25.4	38	11	59
		20 L 075	1F	20	60.63	59.88	66.5	40	25.4	38	11	60
		21 L 075	1F	21	63.68	62.91	70.0	45	25.4	38	11	61
		22 L 075	1F	22	66.70	65.94	75.0	45	25.4	38	11	62
		23 L 075	1F	23	69.73	68.97	79.0	55	25.4	38	11	63
		24 L 075	1F	24	72.77	72.00	79.0	55	25.4	38	11	63
		25 L 075	1F	25	75.80	75.04	82.5	58	25.4	38	11	64
		26 L 075	1F	26	78.84	78.07	86.0	58	25.4	38	11	65
		27 L 075	1F	27	81.86	81.10	86.0	58	25.4	38	11	65
		28 L 075	1F	28	84.89	84.13	91.0	58	25.4	38	11	66
		30 L 075	1F	30	90.96	90.20	97.0	70	25.4	38	11	68
		32 L 075	1F	32	97.03	96.26	102.0	70	25.4	38	11	70
		33 L 075	1F	33	100.05	99.29	106.0	70	25.4	38	11	71
		34 L 075	1F	34	103.08	102.32	112.0	70	25.4	38	11	72
		35 L 075	1F	35	106.12	105.35	112.0	70	25.4	38	11	72
		36 L 075	1F	36	109.14	108.39	115.0	70	25.4	38	11	74
		40 L 075	1F	40	121.29	120.51	128.0	70	25.4	38	11	78
		42 L 075	1F	42	127.34	126.57	135.0	70	25.4	38	11	80
		44 L 075	1F	44	133.40	132.64	142.0	70	25.4	38	11	81
		45 L 075	1F	45	136.44	135.67	142.0	70	25.4	38	11	81
		48 L 075	1F	48	145.54	144.77	150.0	70	25.4	38	11	85
CAST-IRON	WITHOUT FLANGE	50 L 075	4	50	151.60	150.83	-	70	25.4	38	14	-
		52 L 075	4	52	157.66	156.90	-	70	25.4	38	14	-
		56 L 075	4	56	169.79	169.02	-	70	25.4	38	14	-
		57 L 075	4	57	172.82	172.06	-	70	25.4	38	14	-
		60 L 075	4	60	181.92	181.15	-	75	25.4	45	14	-
		72 L 075	4	72	218.29	217.53	-	75	25.4	45	14	-
		84 L 075	4	84	254.69	253.92	-	75	25.4	45	14	-
		96 L 075	4	96	291.06	290.30	-	75	25.4	45	14	-

POWERGRIP® TOOTHED PULLEYS FOR SYNCHRONOUS BELTS

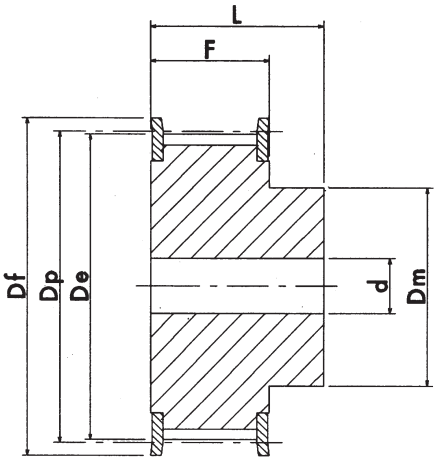

execution 1F

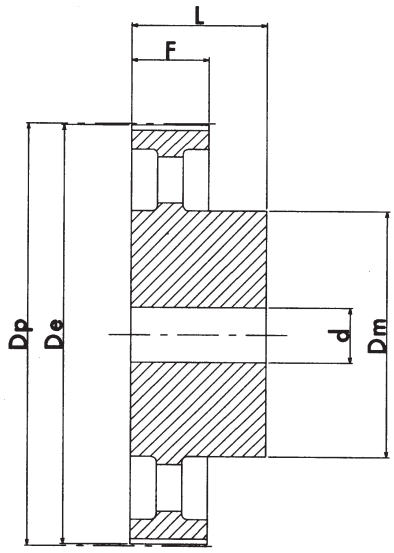

execution 4

L 100 PITCH 3/8" (9.52 mm.)

CHARACTERISTICS		TYPE	EXEC.	No. of TEETH	Dp PITCH LINE	De EXTERNAL	Df FLANGE	Dm HUB	F	L	d	FLANGE No.
STEEL	WITH FLANGE	10 L 100	1F	10	30.33	29.56	37.0	20	31.8	45	8	50
		11 L 100	1F	11	33.35	32.59	37.0	22	31.8	45	8	50
		12 L 100	1F	12	36.37	35.62	43.0	24	31.8	45	8	52
		13 L 100	1F	13	39.41	38.65	44.0	28	31.8	45	8	83
		14 L 100	1F	14	42.44	41.68	48.0	28	31.8	45	11	54
		15 L 100	1F	15	45.48	44.72	51.0	34	31.8	45	11	55
		16 L 100	1F	16	48.51	47.75	54.0	36	31.8	45	11	56
		17 L 100	1F	17	51.54	50.78	57.0	36	31.8	45	11	57
		18 L 100	1F	18	54.59	53.81	60.0	40	31.8	45	11	58
		19 L 100	1F	19	57.61	56.84	64.0	40	31.8	45	11	59
		20 L 100	1F	20	60.63	59.88	66.5	40	31.8	45	11	60
		21 L 100	1F	21	63.68	62.91	70.0	45	31.8	45	11	61
		22 L 100	1F	22	66.70	65.94	75.0	45	31.8	45	11	62
		23 L 100	1F	23	69.73	68.97	79.0	55	31.8	45	11	63
		24 L 100	1F	24	72.77	72.00	79.0	55	31.8	45	11	63
		25 L 100	1F	25	75.80	75.04	82.5	58	31.8	45	11	64
		26 L 100	1F	26	78.84	78.07	86.0	58	31.8	45	11	65
		27 L 100	1F	27	81.86	81.10	86.0	58	31.8	45	11	65
		28 L 100	1F	28	84.89	84.13	91.0	58	31.8	45	11	66
		30 L 100	1F	30	90.96	90.20	97.0	70	31.8	45	11	68
		32 L 100	1F	32	97.03	96.26	102.0	70	31.8	45	11	70
		33 L 100	1F	33	100.05	99.29	106.0	70	31.8	45	11	71
		34 L 100	1F	34	103.08	102.32	112.0	70	31.8	45	11	72
		35 L 100	1F	35	106.12	105.35	112.0	70	31.8	45	11	72
		36 L 100	1F	36	109.14	108.39	115.0	70	31.8	45	11	74
		40 L 100	1F	40	121.29	120.51	128.0	70	31.8	45	11	78
		42 L 100	1F	42	127.34	126.57	135.0	70	31.8	45	11	80
		44 L 100	1F	44	133.40	132.64	142.0	70	31.8	45	11	81
		45 L 100	1F	45	136.44	135.67	142.0	70	31.8	45	11	81
		48 L 100	1F	48	145.54	144.77	150.0	70	31.8	45	11	85
CAST-IRON	WITHOUT FLANGE	50 L 100	4	50	151.60	150.83	-	70	31.8	45	14	-
		52 L 100	4	52	157.66	156.90	-	70	31.8	45	14	-
		56 L 100	4	56	169.79	169.02	-	70	31.8	45	14	-
		57 L 100	4	57	172.82	172.06	-	70	31.8	45	14	-
		60 L 100	4	60	181.92	181.15	-	75	31.8	45	14	-
		72 L 100	4	72	218.29	217.53	-	75	31.8	45	14	-
		84 L 100	4	84	254.69	253.92	-	75	31.8	45	14	-
		96 L 100	4	96	291.06	290.30	-	75	31.8	45	14	-

POWERGRIP® TOOTHED PULLEYS FOR SYNCHRONOUS BELTS

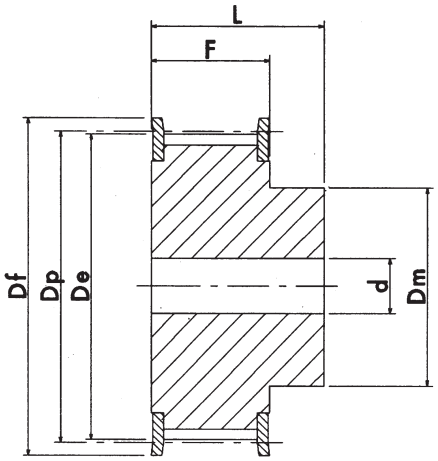

execution 1F

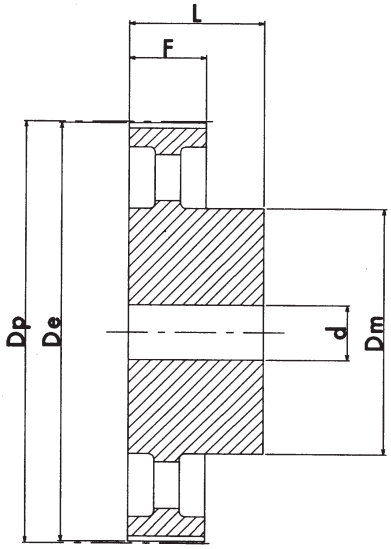

execution 4

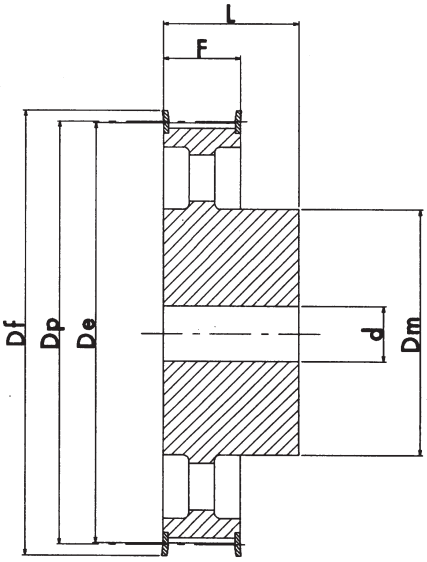

execution 5 F

TIPO: H 075 PASSO 1/2" (12.7 mm.)

CHARACTERISTICS		TYPE	EXEC.	No. of TEETH	Dp PITCH LINE	De EXTERNAL	Df FLANGE	Dm HUB	F	L	d	FLANGE No.
STEEL	WITH FLANGE	14 H 075	1F	14	56.59	55.22	64.0	40	26.4	40	_	59
		15 H 075	1F	15	60.64	59.27	66.5	45	26.4	40	_	60
		16 H 075	1F	16	64.67	63.31	70.0	45	26.4	40	_	61
		17 H 075	1F	17	68.72	67.35	75.0	45	26.4	40	_	62
		18 H 075	1F	18	72.77	71.39	79.0	55	26.4	40	_	63
		19 H 075	1F	19	76.81	75.44	82.5	60	26.4	40	11	64
		20 H 075	1F	20	80.85	79.48	87.0	62	26.4	40	11	76
		21 H 075	1F	21	84.89	83.52	91.0	65	26.4	40	11	66
		22 H 075	1F	22	88.93	87.56	94.0	68	26.4	40	11	67
		23 H 075	1F	23	92.98	91.61	97.0	72	26.4	40	11	68
		24 H 075	1F	24	97.03	95.65	102.0	72	26.4	40	11	70
		25 H 075	1F	25	101.06	99.69	106.0	72	26.4	40	11	71
		26 H 075	1F	26	105.11	103.73	112.0	80	26.4	40	11	72
		27 H 075	1F	27	109.15	107.78	115.0	80	26.4	40	11	74
		28 H 075	1F	28	113.18	111.82	120.0	80	26.4	40	11	75
		30 H 075	1F	30	121.29	119.90	128.0	80	26.4	40	11	78
		32 H 075	1F	32	129.30	127.99	135.0	80	26.4	40	11	80
		33 H 075	1F	33	133.40	132.03	142.0	80	26.4	40	11	81
		34 H 075	1F	34	137.45	136.07	142.0	80	26.4	40	11	81
		35 H 075	1F	35	141.49	140.12	150.0	80	26.4	40	11	85
		36 H 075	1F	36	145.54	144.16	150.0	80	26.4	40	11	85
		38 H 075	1F	38	153.62	152.24	158.0	80	26.4	40	11	86
		40 H 075	1F	40	161.70	160.33	168.0	80	26.4	40	11	90
		42 H 075	1F	42	169.79	168.41	184.0	80	26.4	40	11	94
CAST-IRON		44 H 075	5F	44	177.80	176.50	184.0	80	26.4	40	14	95
		48 H 075	5F	48	194.03	192.67	200.0	90	26.4	45	14	100
	WITHOUT FLANGE	50 H 075	4	50	202.13	200.75	-	90	26.4	45	14	-

POWERGRIP® TOOTHED PULLEYS FOR SYNCHRONOUS BELTS

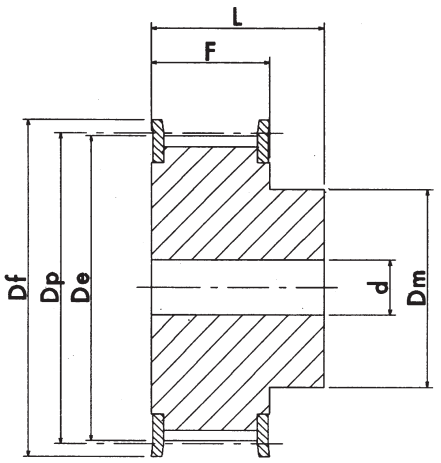

esecuzione 1F

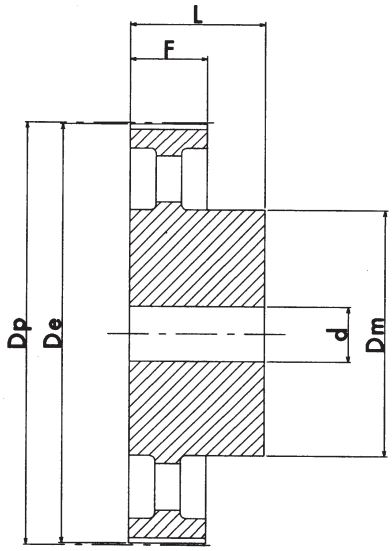

esecuzione 4

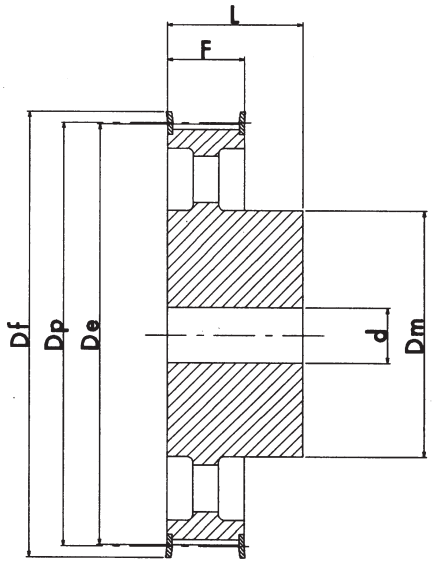

esecuzione 5F

H 100 PITCH 1/2" (12.7 mm.)

CHARACTERISTICS		TYPE	EXEC.	No. of TEETH	Dp PITCH LINE	De EXTERNAL	Df FLANGE	Dm HUB	F	L	d	FLANGE No.
STEEL	WITH FLANGE	14 H 100	1F	14	56.59	55.22	64.0	40	31.8	45	-	59
		15 H 100	1F	15	60.64	59.27	66.5	45	31.8	45	-	60
		16 H 100	1F	16	64.67	63.31	70.0	45	31.8	45	-	61
		17 H 100	1F	17	68.72	67.35	75.0	45	31.8	45	-	62
		18 H 100	1F	18	72.77	71.39	79.0	55	31.8	45	-	63
		19 H 100	1F	19	76.81	75.44	82.5	60	31.8	45	14	64
		20 H 100	1F	20	80.85	79.48	87.0	62	31.8	45	14	76
		21 H 100	1F	21	84.89	83.52	91.0	65	31.8	45	14	66
		22 H 100	1F	22	88.93	87.56	94.0	68	31.8	45	14	67
		23 H 100	1F	23	92.98	91.61	97.0	72	31.8	45	14	68
		24 H 100	1F	24	97.03	95.65	102.0	72	31.8	45	14	70
		25 H 100	1F	25	101.06	99.69	106.0	72	31.8	45	14	71
		26 H 100	1F	26	105.11	103.73	112.0	80	31.8	45	14	72
		27 H 100	1F	27	109.15	107.78	115.0	80	31.8	45	14	74
		28 H 100	1F	28	113.18	111.82	120.0	80	31.8	45	14	75
		29 H 100	1F	29	117.23	115.86	120.0	80	31.8	45	14	75
		30 H 100	1F	30	121.29	119.90	128.0	80	31.8	45	14	78
		32 H 100	1F	32	129.30	127.99	135.0	80	31.8	45	14	80
		33 H 100	1F	33	133.40	132.03	142.0	80	31.8	45	14	81
		34 H 100	1F	34	137.45	136.07	142.0	80	31.8	45	14	81
		35 H 100	1F	35	141.49	140.12	150.0	80	31.8	45	14	85
		36 H 100	1F	36	145.54	144.16	150.0	80	31.8	45	14	85
		38 H 100	1F	38	153.62	152.24	158.0	80	31.8	45	14	86
		40 H 100	1F	40	161.70	160.33	168.0	80	31.8	45	14	90
		42 H 100	1F	42	169.79	168.41	180.0	80	31.8	45	14	94
CAST-IRON		44 H 100	5F	44	177.88	176.50	184.0	80	31.8	50	14	95
		45 H 100	5F	45	181.91	180.54	192.0	80	31.8	50	14	96
		48 H 100	5F	48	194.03	192.67	200.0	90	31.8	50	14	100
	WITHOUT FLANGE	50 H 100	4	50	202.13	200.75	-	90	31.8	50	19	-
		52 H 100	4	52	210.21	208.84	-	90	31.8	50	19	-
		58 H 100	4	58	234.47	233.09	-	90	31.8	50	19	-
		60 H 100	4	60	242.55	241.18	-	120	31.8	50	19	-
		70 H 100	4	70	282.98	281.61	-	120	31.8	55	19	-
		72 H 100	4	72	291.06	289.69	-	120	31.8	55	19	-
		84 H 100	4	84	339.57	338.20	-	120	31.8	55	19	-
		96 H 100	4	96	388.09	386.71	-	120	31.8	60	19	-
		120 H 100	4	120	485.12	483.73	-	120	31.8	60	19	-

POWERGRIP® TOOTHED PULLEYS FOR SYNCHRONOUS BELTS

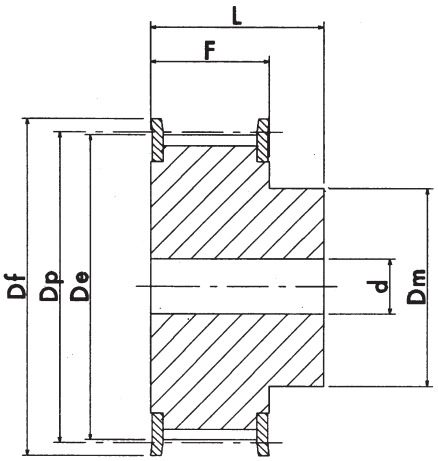

esecuzione 1F

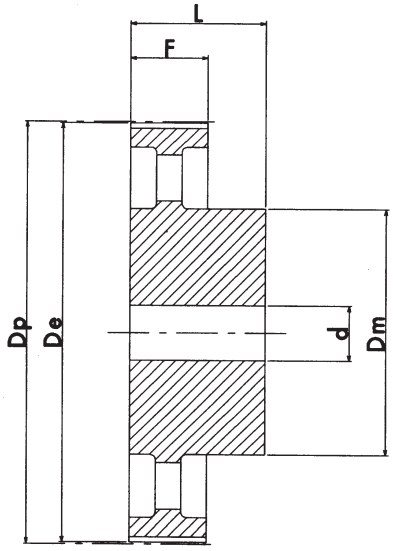

esecuzione 4

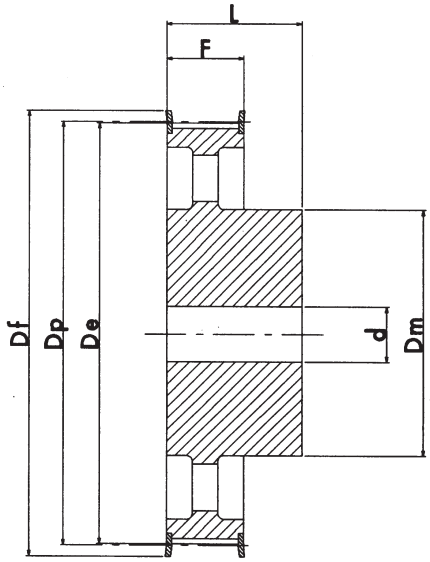

esecuzione 5F

H 150 PITCH 1/2" (12.7 mm.)

CARATTERISTICHE		TYPE	EXEC.	No. of TEETH	Dp PITCH LINE	De EXTERNAL	Df FLANGE	Dm HUB	F	L	d	FLANGE No.
STEEL	WITH FLANGE	14 H 150	1F	14	56.59	55.22	64.0	42	46.0	58	-	59
		15 H 150	1F	15	60.64	59.27	66.5	45	46.0	58	-	60
		16 H 150	1F	16	64.67	63.31	70.0	45	46.0	58	-	61
		17 H 150	1F	17	68.72	67.35	75.0	45	46.0	58	-	62
		18 H 150	1F	18	72.77	71.39	79.0	55	46.0	58	-	63
		19 H 150	1F	19	76.81	75.44	82.5	60	46.0	58	-	64
		20 H 150	1F	20	80.85	79.48	87.0	62	46.0	58	-	76
		21 H 150	1F	21	84.89	83.52	91.0	65	46.0	58	-	66
		22 H 150	1F	22	88.93	87.56	94.0	68	46.0	58	-	67
		23 H 150	1F	23	92.98	91.61	97.0	72	46.0	58	-	68
		24 H 150	1F	24	97.03	95.65	102.0	72	46.0	58	-	70
		25 H 150	1F	25	101.06	99.69	106.0	72	46.0	58	-	71
		26 H 150	1F	26	105.11	103.73	112.0	80	46.0	58	-	72
		27 H 150	1F	27	109.15	107.78	115.0	80	46.0	58	-	74
		28 H 150	1F	28	113.18	111.82	120.0	80	46.0	58	-	75
		29 H 150	1F	29	117.23	115.86	120.0	80	46.0	58	-	75
		30 H 150	1F	30	121.29	119.90	128.0	80	46.0	58	-	78
		32 H 150	1F	32	129.30	127.99	135.0	80	46.0	58	-	80
		33 H 150	1F	33	133.40	132.03	142.0	80	46.0	58	-	81
		34 H 150	1F	34	137.45	136.07	142.0	80	46.0	58	-	81
		35 H 150	1F	35	141.49	140.12	150.0	80	46.0	58	-	85
		36 H 150	1F	36	145.54	144.16	150.0	80	46.0	58	-	85
		38 H 150	1F	38	153.62	152.24	158.0	80	46.0	58	-	86
		40 H 150	1F	40	161.70	160.33	168.0	80	46.0	58	-	90
		42 H 150	1F	42	169.79	168.41	180.0	80	46.0	58	-	94
		44 H 150	5F	44	177.88	176.50	184.00	80	46.0	58	19	95
		45 H 150	5F	45	181.91	180.54	192.00	80	46.0	58	19	96
		48 H 150	5F	48	194.03	192.67	200.00	90	46.0	65	19	100
CAST-IRON	WITHOUT FLANGE	50 H 150	4	50	202.13	200.75	-	90	46.0	65	19	-
		52 H 150	4	52	210.21	208.84	-	90	46.0	65	19	-
		58 H 150	4	58	234.47	233.09	-	90	46.0	65	19	-
		60 H 150	4	60	242.55	241.18	-	120	46.0	65	19	-
		70 H 150	4	70	282.98	281.61	-	120	46.0	65	24	-
		72 H 150	4	72	291.06	289.69	-	120	46.0	65	24	-
		84 H 150	4	84	339.57	338.20	-	120	46.0	65	24	-
		96 H 150	4	96	388.09	386.71	-	120	46.0	65	24	-
		120 H 150	4	120	485.12	483.73	-	120	46.0	65	24	-

POWERGRIP® TOOTHED PULLEYS FOR SYNCHRONOUS BELTS

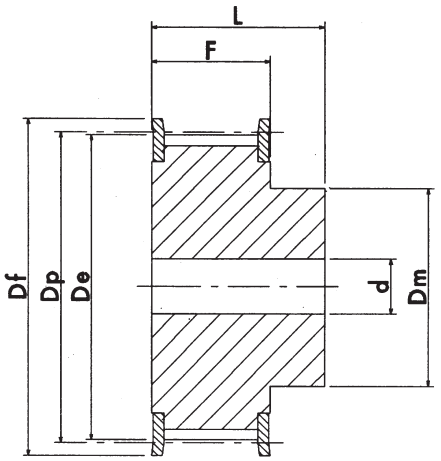

execution 1F

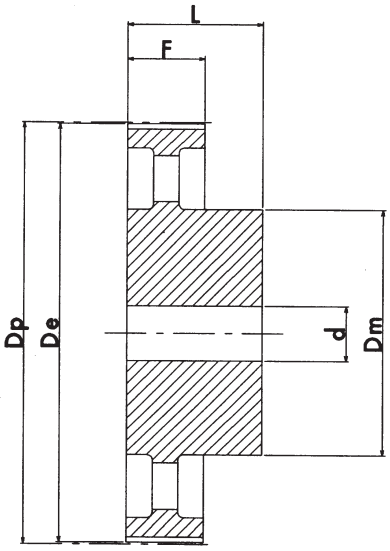

execution 4

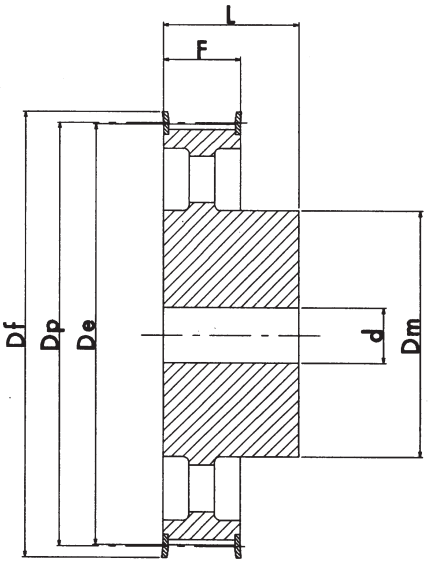

execution 5 F

H 200 PITCH 1/2" (12.7 mm.)

CHARACTERISTICS		TYPE	EXEC.	No. of TEETH	Dp PITCH LINE	De EXTERNAL	Df FLANGE	Dm HUB	F	L	d	FLANGE No.
STEEL	WITH FLANGE	14 H 200	1F	14	56.59	55.22	64.0	42	58.7	70	-	59
		15 H 200	1F	15	60.64	59.27	66.5	45	58.7	70	-	60
		16 H 200	1F	16	64.67	63.31	70.0	45	58.7	70	-	61
		17 H 200	1F	17	68.72	67.35	75.0	45	58.7	70	-	62
		18 H 200	1F	18	72.77	71.39	79.0	55	58.7	70	-	63
		19 H 200	1F	19	76.81	75.44	82.5	60	58.7	70	-	64
		20 H 200	1F	20	80.85	79.48	87.0	62	58.7	70	-	76
		21 H 200	1F	21	84.89	83.52	91.0	65	58.7	70	-	66
		22 H 200	1F	22	88.93	87.56	94.0	68	58.7	70	-	67
		23 H 200	1F	23	92.98	91.61	97.0	72	58.7	70	-	68
		24 H 200	1F	24	97.03	95.65	102.0	72	58.7	70	-	70
		25 H 200	1F	25	101.06	99.69	106.0	72	58.7	70	-	71
		26 H 200	1F	26	105.11	103.73	112.0	80	58.7	70	-	72
		27 H 200	1F	27	109.15	107.78	115.0	80	58.7	70	-	74
		28 H 200	1F	28	113.18	111.82	120.0	80	58.7	70	-	75
		29 H 200	1F	29	117.23	115.86	120.0	80	58.7	70	-	75
		30 H 200	1F	30	121.29	119.90	128.0	80	58.7	70	-	78
		32 H 200	1F	32	129.30	127.99	135.0	80	58.7	70	-	80
		33 H 200	1F	33	133.40	132.03	142.0	80	58.7	70	-	81
		34 H 200	1F	34	137.45	136.07	142.0	80	58.7	70	-	81
		35 H 200	1F	35	141.49	140.12	150.0	80	58.7	70	-	85
		36 H 200	1F	36	145.54	144.16	150.0	80	58.7	70	-	85
		38 H 200	1F	38	153.62	152.24	158.0	80	58.7	70	-	86
		40 H 200	1F	40	161.70	160.33	168.0	80	58.7	70	-	90
		42 H 200	1F	42	169.79	168.41	180.0	80	58.7	70	-	94
CAST-IRON		44 H 200	5F	44	177.88	176.50	184.0	80	58.7	70	19	95
		45 H 200	5F	45	181.91	180.54	192.0	80	58.7	70	19	96
		48 H 200	5F	48	194.03	192.67	200.0	90	58.7	75	24	100
	WITHOUT FLANGE	50 H 200	4	50	202.13	200.75	-	90	58.7	75	24	-
		52 H 200	4	52	210.21	208.84	-	90	58.7	75	24	-
		58 H 200	4	58	234.47	233.09	-	90	58.7	75	24	-
		60 H 200	4	60	242.55	241.18	-	120	58.7	75	24	-
		70 H 200	4	70	282.98	281.61	-	120	58.7	75	28	-
		72 H 200	4	72	291.06	289.69	-	120	58.7	75	28	-
		84 H 200	4	84	339.57	338.20	-	120	58.7	75	28	-
		96 H 200	4	96	388.09	386.71	-	120	58.7	75	28	-
		120 H 200	4	120	485.12	483.73	-	120	58.7	75	28	-

POWERGRIP® TOOTHED PULLEYS FOR SYNCHRONOUS BELTS

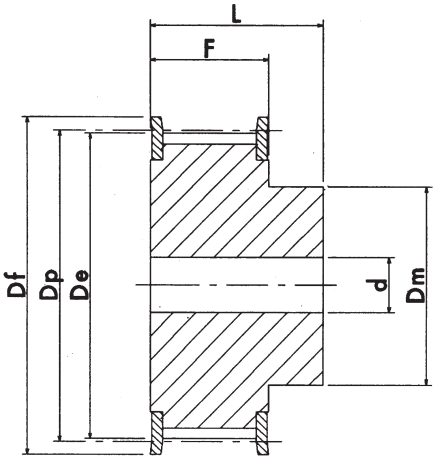

execution 1F

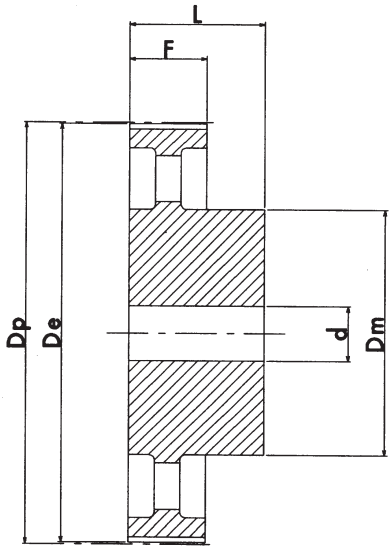

execution 4

TIPO: H 300 PASSO 1/2" (12.7 mm.)

CHARACTERISTICS		TYPE	EXEC.	No. of TEETH	Dp PITCH LINE	De EXTERNAL	Df FLANGE	Dm HUB	F	L	d	FLANGE No.
STEEL	WITH FLANGE	14 H 300	1F	14	56.59	55.22	64.0	42	85.7	100	-	59
		15 H 300	1F	15	60.64	59.27	66.5	45	85.7	100	-	60
		16 H 300	1F	16	64.67	63.31	70.0	45	85.7	100	-	61
		17 H 300	1F	17	68.72	67.35	75.0	45	85.7	100	-	62
		18 H 300	1F	18	72.77	71.39	79.0	55	85.7	100	-	63
		19 H 300	1F	19	76.81	75.44	82.5	60	85.7	100	-	64
		20 H 300	1F	20	80.85	79.48	87.0	62	85.7	100	-	76
		21 H 300	1F	21	84.89	83.52	91.0	65	85.7	100	-	66
		22 H 300	1F	22	88.93	87.56	94.0	68	85.7	100	-	67
		23 H 300	1F	23	92.98	91.61	97.0	72	85.7	100	-	68
		24 H 300	1F	24	97.03	95.65	102.0	72	85.7	100	-	70
		25 H 300	1F	25	101.06	99.69	106.0	72	85.7	100	-	71
		26 H 300	1F	26	105.11	103.73	112.0	80	85.7	100	-	72
		27 H 300	1F	27	109.15	107.78	115.0	80	85.7	100	-	74
		28 H 300	1F	28	113.18	111.82	120.0	80	85.7	100	-	75
		30 H 300	1F	30	121.29	119.90	128.0	80	85.7	100	-	78
		32 H 300	1F	32	129.30	127.99	135.0	80	85.7	100	-	80
		33 H 300	1F	33	133.40	132.03	142.0	80	85.7	100	-	81
		34 H 300	1F	34	137.45	136.07	142.0	80	85.7	100	-	81
		35 H 300	1F	35	141.49	140.12	150.0	80	85.7	100	-	85
		36 H 300	1F	36	145.54	144.16	150.0	80	85.7	100	-	85
		38 H 300	1F	38	153.62	152.24	158.0	80	85.7	100	-	86
		40 H 300	1F	40	161.70	160.33	168.0	80	85.7	100	-	90
		42 H 300	1F	42	169.79	168.41	180.0	80	85.7	100	-	94
CAST-IRON	WITHOUT FLANGE	44 H 300	4	44	177.88	176.50	-	80	85.7	100	24	-
		48 H 300	4	48	194.03	192.67	-	90	85.7	100	24	-
		50 H 300	4	50	202.13	200.75	-	90	85.7	100	24	-
		58 H 300	4	58	234.47	233.09	-	90	85.7	100	24	-
		60 H 300	4	60	242.55	241.18	-	120	85.7	100	24	-
		72 H 300	4	72	291.06	289.69	-	120	85.7	100	28	-
		84 H 300	4	84	339.57	338.20	-	120	85.7	100	28	-
		96 H 300	4	96	388.09	386.71	-	120	85.7	100	28	-
		120 H 300	4	120	485.12	483.73	-	120	85.7	100	28	-

POWERGRIP® TOOTHED PULLEYS FOR SYNCHRONOUS BELTS

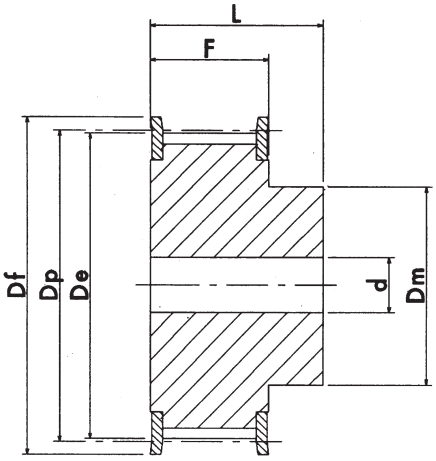

execution 1F

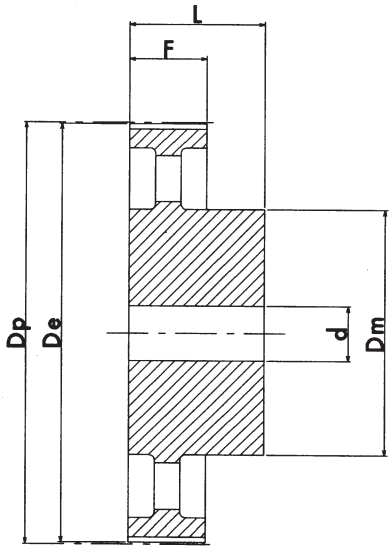

execution 4

* Toothing marked with an asterisk are produced on request

XH 200 PITCH 7/8" (22.22mm.)

CHARACTERISTICS		TYPE	EXEC.	No. of TEETH	Dp PITCH LINE	De EXTERNAL	Df FLANGE	Dm HUB	F	L	d	FLANGE No.
STEEL	WITH FLANGE	18 XH 200	1F	18	127.34	124.55	140.0	100	65	80	24	155
		19 XH 200	1F	19	134.41	131.62	146.0	100	65	80	24	156
		20 XH 200	1F	20	141.49	138.69	155.0	100	65	80	24	157
		21 XH 200	1F	21	148.56	145.77	160.0	110	65	80	24	158
		22 XH 200	1F	22	155.64	152.84	170.0	110	65	80	24	159
		24 XH 200	1F	24	169.79	166.99	184.0	120	65	80	24	161
		25 XH 200	1F	25	176.86	174.07	188.0	120	65	80	24	162
		26 XH 200	1F	26	183.93	181.14	198.0	120	65	80	24	163
		27 XH 200	1F	27	191.01	188.22	205.0	120	65	80	24	164
		28 XH 200	1F	28	198.09	195.29	212.0	120	65	80	24	165
		30 XH 200	1F	30	212.23	209.44	227.0	120	65	80	24	167
		32 XH 200	1F	32	226.38	223.59	240.0	120	65	80	24	169
		34 XH 200	1F	34	240.53	237.74	256.0	120	65	80	24	170
CAST-IRON	WITHOUT FLANGE	*38 XH 200	4	38	268.83	266.03	-	150	65	80	28	-
		*40 XH 200	4	40	282.98	280.18	-	150	65	100	28	-
		*48 XH 200	4	48	339.57	336.78	-	150	65	100	28	-
		*60 XH 200	4	60	424.47	421.67	-	150	65	100	28	-
		*72 XH 200	4	72	509.36	506.56	-	160	65	100	28	-
		*84 XH 200	4	84	594.25	591.46	-	160	65	100	28	-
		*96 XH 200	4	96	679.15	676.35	-	160	65	100	28	-
		*120 XH 200	4	120	848.93	846.14	-	160	65	100	28	-

POWERGRIP® TOOTHED PULLEYS FOR SYNCHRONOUS BELTS

XH 300 PITCH 7/8" (22.22mm.)

CHARACTERISTICS		TYPE	EXEC.	No. of TEETH	Dp PITCH LINE	De EXTERNAL	Df FLANGE	Dm HUB	F	L	d	FLANGE No.
STEEL	WITH FLANGE	18 XH 300	1F	18	127.34	124.55	140.0	100	90.5	110	28	155
		19 XH 300	1F	19	134.41	131.62	146.0	100	90.5	110	28	156
		20 XH 300	1F	20	141.49	138.69	155.0	100	90.5	110	28	157
		21 XH 300	1F	21	148.56	145.77	160.0	110	90.5	110	28	158
		22 XH 300	1F	22	155.64	152.84	170.0	110	90.5	110	28	159
		24 XH 300	1F	24	169.79	166.99	184.0	120	90.5	110	28	161
		25 XH 300	1F	25	176.86	174.07	188.0	120	90.5	110	28	162
		26 XH 300	1F	26	183.93	181.14	198.0	120	90.5	110	28	163
		27 XH 300	1F	27	191.01	188.22	205.0	120	90.5	110	28	164
		28 XH 300	1F	28	198.09	195.29	212.0	150	90.5	110	28	165
		30 XH 300	1F	30	212.23	209.44	227.0	150	90.5	110	28	167
		32 XH 300	1F	32	226.38	223.59	240.0	150	90.5	110	28	169
		34 XH 300	1F	34	240.53	237.74	256.0	150	90.5	110	28	170
CAST-IRON	WITHOUT FLANGE	*38 XH 300	4	38	268.83	266.03	-	150	90.5	120	32	-
		*40 XH 300	4	40	282.98	280.18	-	150	90.5	120	32	-
		*48 XH 300	4	48	339.57	336.78	-	175	90.5	120	32	-
		*60 XH 300	4	60	424.47	421.67	-	175	90.5	120	32	-
		*72 XH 300	4	72	509.36	506.56	-	175	90.5	120	32	-
		*84 XH 300	4	84	594.25	591.46	-	175	90.5	120	32	-
		*96 XH 300	4	96	679.15	676.35	-	175	90.5	120	32	-
		*120 XH 300	4	120	848.93	846.14	-	175	90.5	120	32	-

* Toothing marked with an asterisk are produced on request

XH 400 PITCH 7/8" (22.22mm.)

CHARACTERISTICS		TYPE	EXEC.	No. of TEETH	Dp PITCH LINE	De EXTERNAL	Df FLANGE	Dm HUB	F	L	d	FLANGE No.
STEEL	WITH FLANGE	18 XH 400	1F	18	127.34	124.55	140.0	100	118	132	32	155
		19 XH 400	1F	19	134.41	131.62	146.0	100	118	132	32	156
		20 XH 400	1F	20	141.49	138.69	155.0	100	118	132	32	157
		21 XH 400	1F	21	148.56	145.77	160.0	110	118	132	32	158
		22 XH 400	1F	22	155.64	152.84	170.0	110	118	132	32	159
		24 XH 400	1F	24	169.79	166.99	184.0	120	118	132	32	161
		25 XH 400	1F	25	176.86	174.07	188.0	120	118	132	32	162
		26 XH 400	1F	26	183.93	181.14	198.0	120	118	132	32	163
		27 XH 400	1F	27	191.01	188.22	205.0	120	118	132	32	164
		28 XH 400	1F	28	198.09	195.29	212.0	150	118	132	32	165
		30 XH 400	1F	30	212.23	209.44	227.0	150	118	132	32	167
		32 XH 400	1F	32	226.38	223.59	240.0	150	118	132	32	169
		34 XH 400	1F	34	240.53	237.74	256.0	150	118	132	32	170
CAST-IRON	WITHOUT FLANGE	*38 XH 400	4	38	268.83	266.03	-	150	118	132	32	-
		*40 XH 400	4	40	282.98	280.18	-	150	118	132	32	-
		*48 XH 400	4	48	339.57	336.78	-	175	118	132	32	-
		*60 XH 400	4	60	424.47	421.67	-	175	118	132	32	-
		*72 XH 400	4	72	509.36	506.56	-	175	118	132	32	-
		*84 XH 400	4	84	594.25	591.46	-	175	118	132	32	-
		*96 XH 400	4	96	679.15	676.35	-	175	118	132	32	-
		*120 XH 400	4	120	848.93	846.14	-	175	118	132	32	-

POWERGRIP® TOOTHED PULLEYS FOR SYNCHRONOUS BELTS

XXH 200 PITCH 1" 1/4 (31.75mm.)

CHARACTERISTICS		TYPE	EXEC.	No. of TEETH	Dp PITCH LINE	De EXTERNAL	Df FLANGE	Dm HUB	F	L	d	FLANGE No.
STEEL	WITH FLANGE	18 XXH 200	1F	18	181.91	178.87	198.0	140	64.2	100	28	163
		20 XXH 200	1F	20	202.13	199.08	212.0	150	64.2	100	28	165
		22 XXH 200	1F	22	222.34	219.29	240.0	150	64.2	100	28	169
		24 XXH 200	1F	24	242.55	239.50	267.0	150	64.2	100	28	173
		26 XXH 200	1F	26	262.76	259.79	290.0	150	64.2	100	28	178
CAST-IRON	WITHOUT FLANGE	*30 XXH 200	4	30	303.19	300.14	-	150	64.2	100	28	-
		*40 XXH 200	4	40	404.25	401.21	-	150	64.2	100	28	-
		*48 XXH 200	4	48	485.10	482.06	-	175	64.2	120	32	-
		*60 XXH 200	4	60	606.38	603.33	-	175	64.2	120	32	-
		*72 XXH 200	4	72	727.66	724.61	-	175	64.2	120	38	-
		*90 XXH 200	4	90	909.57	906.52	-	175	64.2	120	38	-

* Toothing marked with the asterisk are produced on request

XXH 300 PITCH 1" 1/4 (mm 31.75)

CHARACTERISTICS		TYPE	EXEC.	No. of TEETH	Dp PITCH LINE	De EXTERNAL	Df FLANGE	Dm HUB	F	L	d	FLANGE No.
STEEL	WITH FLANGE	18 XXH 300	1F	18	181.91	178.87	198.0	140	91.4	110	28	163
		20 XXH 300	1F	20	202.13	199.08	212.0	150	91.4	110	28	165
		22 XXH 300	1F	22	222.34	219.29	240.0	150	91.4	110	28	169
		24 XXH 300	1F	24	242.55	239.50	267.0	150	91.4	110	28	173
		26 XXH 300	1F	26	262.76	259.79	290.0	150	91.4	110	28	178
CAST-IRON	WITHOUT FLANGE	*30 XXH 300	4	30	303.19	300.14	-	150	91.4	110	28	-
		*40 XXH 300	4	40	404.25	401.21	-	150	91.4	110	28	-
		*48 XXH 300	4	48	485.10	482.06	-	175	91.4	120	32	-
		*60 XXH 300	4	60	606.38	603.33	-	175	91.4	120	32	-
		*72 XXH 300	4	72	727.66	724.61	-	175	91.4	120	38	-
		*90 XXH 300	4	90	909.57	906.52	-	175	91.4	120	38	-

POWERGRIP® TOOTHED PULLEYS FOR SYNCHRONOUS BELTS

XXH 400 PITCH 1" 1/4 (31.75mm.)

CHARACTERISTICS		TYPE	EXEC.	No. of TEETH	Dp PITCH LINE	De EXTERNAL	Df FLANGE	Dm HUB	F	L	d	FLANGE No.
STEEL	WITH FLANGE	18 XXH 400	1F	18	181.91	178.87	198.0	140	118.2	140	32	163
		20 XXH 400	1F	20	202.13	199.08	212.0	150	118.2	140	32	165
		22 XXH 400	1F	22	222.34	219.29	240.0	150	118.2	140	32	169
		24 XXH 400	1F	24	242.55	239.50	267.0	150	118.2	140	32	173
		26 XXH 400	1F	26	262.76	259.79	290.0	150	118.2	140	32	178
CAST-IRON	WITHOUT FLANGE	*30 XXH 400	4	30	303.19	300.14	-	185	118.2	140	32	-
		*40 XXH 400	4	40	404.25	401.21	-	185	118.2	140	32	-
		*48 XXH 400	4	48	485.10	482.06	-	185	118.2	140	38	-
		*60 XXH 400	4	60	606.38	603.33	-	185	118.2	140	38	-
		*72 XXH 400	4	72	727.66	724.61	-	220	118.2	140	38	-
		*90 XXH 400	4	90	909.57	906.52	-	220	118.2	140	38	-

* Toothing marked with the asterisk are produced on request

XXH 500 PITCH 1" 1/4 (mm 31.75)

CHARACTERISTICS		TYPE	EXEC.	No. of TEETH	Dp PITCH LINE	De EXTERNAL	Df FLANGE	Dm HUB	F	L	d	FLANGE No.
STEEL	WITH FLANGE	18 XXH 500	1F	18	181.91	178.87	198.0	140	145.3	168	32	163
		20 XXH 500	1F	20	202.13	199.08	212.0	150	145.3	168	32	165
		22 XXH 500	1F	22	222.34	219.29	240.0	150	145.3	168	32	169
		24 XXH 500	1F	24	242.55	239.50	267.0	150	145.3	168	32	173
		26 XXH 500	1F	26	262.76	259.79	290.0	150	145.3	168	32	178
CAST-IRON	WITHOUT FLANGE	*30 XXH 500	4	30	303.19	300.14	-	215	145.3	168	32	-
		*40 XXH 500	4	40	404.25	401.21	-	215	145.3	168	32	-
		*48 XXH 500	4	48	485.10	482.06	-	215	145.3	168	38	-
		*60 XXH 500	4	60	606.38	603.33	-	240	145.3	168	38	-
		*72 XXH 500	4	72	727.66	724.61	-	240	145.3	168	38	-
		*90 XXH 500	4	90	909.57	906.52	-	240	145.3	168	38	-

POWERGRIP® TOOTHED PULLEYS FOR SYNCHRONOUS BELTS

EXPORT "PHOSPHATED"

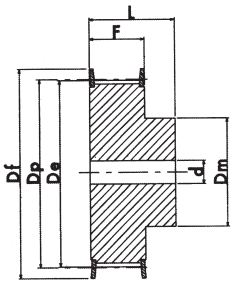

EXECUTION 1F

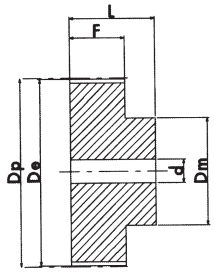

EXECUTION 2

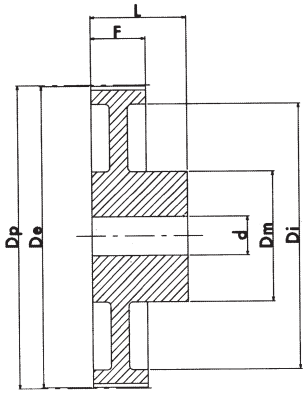

EXECUTION 3

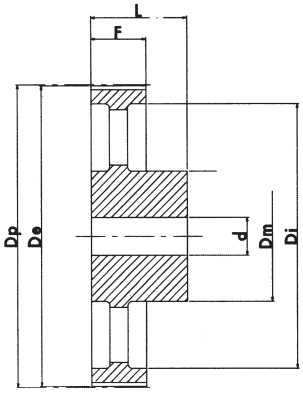

EXECUTION 4

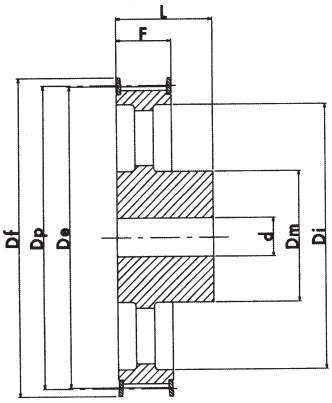

EXECUTION 5F

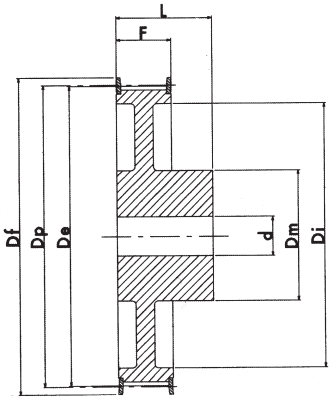

EXECUTION 6F

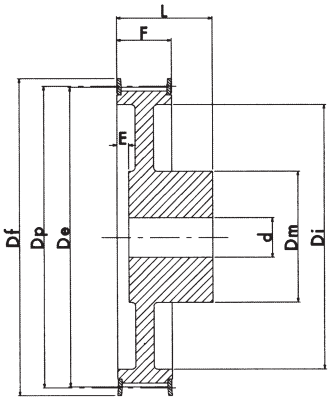

EXECUTION 7F

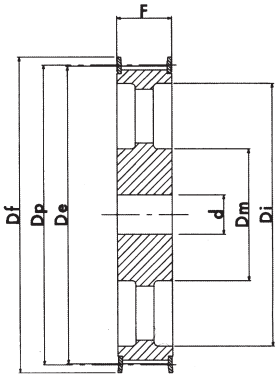

EXECUTION 8F

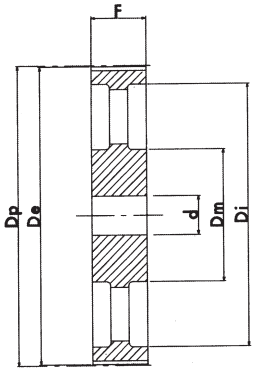

EXECUTION 9

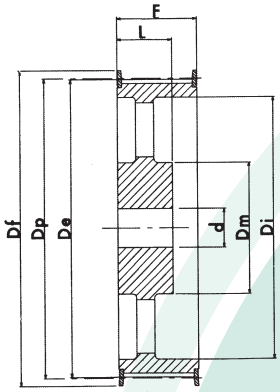

EXECUTION 10F

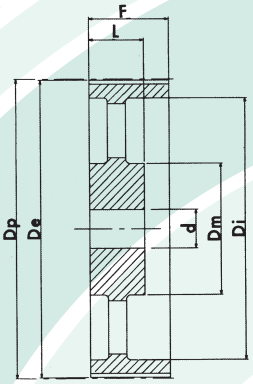

EXECUTION11

POWERGRIP® TOOTHED PULLEYS FOR SYNCHRONOUS BELTS

EXPORT "PHOSPHATED"

XL 037 PITCH 1/5" (5.08mm.)

CHARACTERISTICS		TYPE	EXEC.	No. of TEETH	Dp PITCH LINE	De EXTERNAL	Df FLANGE	Dm HUB	Di	F	L	d Ø bore	No. 2 holes threaded at 90°	FLANGE No.
STEEL/ALUMINIUM	WITH FLANGE	10 XL 037	1F	10	16.17	15.66	23	9.5	-	14.3	19.8	4.0	M3	1
		11 XL 037	1F	11	17.79	17.28	23	11.0	-	14.3	19.8	4.0	M3	1
		12 XL 037	1F	12	19.40	18.90	25	12.7	-	14.3	19.8	4.0	M3	2
		14 XL 037	1F	14	22.64	22.13	28	14.3	-	14.3	19.8	6.0	M4	4
		15 XL 037	1F	15	24.26	23.75	28	15.9	-	14.3	19.8	6.0	M4	4
		16 XL 037	1F	16	25.87	25.36	32	17.5	-	14.3	19.8	6.0	M4	5
		18 XL 037	1F	18	29.11	28.60	35	20.6	-	14.3	19.8	6.0	M4	7
		20 XL 037	1F	20	32.34	31.83	38	23.8	-	14.3	22.2	6.0	M4	9
		21 XL 037	1F	21	33.96	33.45	38	23.8	-	14.3	22.2	6.0	M4	9
		22 XL 037	1F	22	35.57	35.07	41	25.4	-	14.3	22.2	6.0	M4	10
		24 XL 037	1F	24	38.81	38.30	44	27.0	-	14.3	22.2	6.0	M4	12
		26 XL 037	1F	26	42.04	41.53	48	30.0	-	14.3	22.2	6.0	M4	11
		28 XL 037	1F	28	45.28	44.77	51	30.2	-	14.3	22.2	6.0	M4	16
		30 XL 037	1F	30	48.51	48.00	54	34.9	-	14.3	22.2	6.0	M4	18
ALUMINIUM	WITHOUT FLANGE	32 XL 037	2	32	51.74	51.24	-	38.0	-	14.3	25.4	8.0	M4	-
		36 XL 037	2	36	58.21	57.70	-	38.0	-	14.3	25.4	8.0	M4	-
		40 XL 037	2	40	64.68	64.17	-	38.0	-	14.3	25.4	8.0	M4	-
		42 XL 037	3	42	67.91	67.41	-	38.0	58	14.3	25.4	8.0	M4	-
		44 XL 037	3	44	71.15	70.64	-	38.0	60	14.3	25.4	8.0	M4	-
		48 XL 037	3	48	77.62	77.11	-	38.0	66	14.3	25.4	8.0	M4	-
		60 XL 037	3	60	97.02	96.51	-	38.0	82	14.3	25.4	8.0	M4	-
		72 XL 037	3	72	116.43	115.92	-	38.0	100	14.3	25.4	8.0	M4	-

L 050 PITCH 3/8" (9.52mm.)

CHARACTERISTICS		TYPE	TYPE	No. of TEETH	Dp PITCH LINE	De EXTERNAL	Df FLANGE	Dm HUB	Di	F	L	d Ø bore	FLANGE No.
STEEL	WITH FLANGE	10 L 050	1F	10	30.32	29.56	37	22	-	19	26	6	50
		12 L 050	1F	12	36.38	35.62	43	28	-	19	26	6	52
		13 L 050	1F	13	39.41	38.65	44	30	-	19	26	6	83
		14 L 050	1F	14	42.45	41.68	48	33	-	19	26	8	54
		15 L 050	1F	15	45.48	44.72	51	36	-	19	26	8	55
		16 L 050	1F	16	48.51	47.75	54	38	-	19	26	8	56
		17 L 050	1F	17	51.54	50.78	57	40	-	19	26	10	57
		18 L 050	1F	18	54.57	53.81	60	40	-	19	26	10	58
		19 L 050	1F	19	57.61	56.84	64	40	-	19	26	10	59
		20 L 050	1F	20	60.64	59.88	66.5	46	-	19	26	10	60
		21 L 050	1F	21	63.67	62.91	70	46	-	19	26	10	61
		22 L 050	1F	22	66.70	65.94	75	50	-	19	26	10	62
		24 L 050	1F	24	72.77	72.00	79	50	-	19	26	12	63
		26 L 050	1F	26	78.83	78.07	86	50	-	19	26	12	65
		28 L 050	1F	28	84.89	84.13	91	50	-	19	26	12	66
		30 L 050	1F	30	90.96	90.20	97	50	-	19	26	12	68
		32 L 050	1F	32	97.02	96.26	102	50	-	19	26	12	70
		36 L 050	6F	36	109.15	108.39	115	50	94	19	26	12	74
		40 L 050	6F	40	121.28	120.51	128	50	98	19	26	12	78
CAST-IRON		44 L 050	5F	44	133.40	132.64	142	50	108	19	26	12	81
		48 L 050	5F	48	145.53	144.77	150	50	118	19	26	12	85
	WITHOUT FLANGE	60 L 050	4	60	191.91	181.15	-	50	163	19	28	15	-
		72 L 050	4	72	218.30	217.53	-	50	199	19	28	15	-
		84 L 050	4	84	254.68	253.92	-	50	236	19	28	15	-

N.B. The aluminium pulleys are not phosphated

POWERGRIP® TOOTHED PULLEYS FOR SYNCHRONOUS BELTS

EXPORT "PHOSPHATED"

L 075 PITCH 3/8" (9.52mm.)

CHARACTERISTICS		TYPE	TYPE	No. of TEETH	Dp PITCH LINE	De EXTERNAL	Df FLANGE	Dm HUB	Di	F	L	d Ø bore	FLANGE No.
STEEL	WITH FLANGE	10 L 075	1F	10	30.32	29.56	37	22	-	25	32	8	50
		12 L 075	1F	12	36.38	35.62	43	28	-	25	32	8	52
		13 L 075	1F	13	39.41	38.65	44	30	-	25	32	8	83
		14 L 075	1F	14	42.45	41.68	48	33	-	25	32	8	54
		15 L 075	1F	15	45.48	44.72	51	36	-	25	32	8	55
		16 L 075	1F	16	48.51	47.75	54	38	-	25	32	8	56
		17 L 075	1F	17	51.54	50.78	57	40	-	25	32	10	57
		18 L 075	1F	18	54.57	53.81	60	40	-	25	32	10	58
		19 L 075	1F	19	57.61	56.84	64	40	-	25	32	10	59
		20 L 075	1F	20	60.64	59.88	66.5	46	-	25	32	10	60
		21 L 075	1F	21	63.67	62.91	70	46	-	25	32	10	61
		22 L 075	1F	22	66.70	65.94	75	50	-	25	32	10	62
		24 L 075	1F	24	72.77	72.00	79	50	-	25	32	12	63
		26 L 075	1F	26	78.83	78.07	86	50	-	25	32	12	65
		28 L 075	1F	28	84.89	84.13	91	50	-	25	32	12	66
		30 L 075	1F	30	90.96	90.20	97	50	-	25	32	12	68
		32 L 075	1F	32	97.02	96.26	102	50	-	25	32	12	70
		36 L 075	6F	36	109.15	108.39	115	55	94	25	32	12	74
		40 L 075	6F	40	121.28	120.51	128	60	98	25	32	12	78
CAST-IRON		44 L 075	5F	44	133.40	132.64	142	60	108	25	32	12	81
		48 L 075	5F	48	145.53	144.77	150	60	118	25	32	12	85
	WITHOUT FLANGE	60 L 075	4	60	191.91	181.15	-	60	163	26	35	15	-
		72 L 075	4	70	218.30	217.53	-	60	199	26	35	15	-
		84 L 075	4	84	254.68	253.92	-	60	236	26	35	15	-

L 100 PITCH 3/8" (9.52mm.)

CHARACTERISTICS		TYPE	TYPE	No. of TEETH	Dp PITCH LINE	De EXTERNAL	Df FLANGE	Dm HUB	Di	F	L	d Ø bore	FLANGE No.
STEEL	WITH FLANGE	10 L 100	1F	10	30.32	29.56	37	22	-	31	38	8	50
		12 L 100	1F	12	36.38	35.62	43	28	-	31	38	8	52
		13 L 100	1F	13	39.41	38.65	44	30	-	31	38	8	83
		14 L 100	1F	14	42.45	41.68	48	33	-	31	38	8	54
		15 L 100	1F	15	45.48	44.72	51	36	-	31	38	8	55
		16 L 100	1F	16	48.51	47.75	54	38	-	31	38	8	56
		17 L 100	1F	17	51.54	50.78	57	40	-	31	38	10	57
		18 L 100	1F	18	54.57	53.81	60	40	-	31	38	10	58
		19 L 100	1F	19	57.61	56.84	64	40	-	31	38	10	59
		20 L 100	1F	20	60.64	59.88	66.5	46	-	31	38	10	60
		21 L 100	1F	21	63.67	62.91	70	46	-	31	38	10	61
		22 L 100	1F	22	66.70	65.94	75	50	-	31	38	10	62
		24 L 100	1F	24	72.77	72.00	79	50	-	31	38	12	63
		26 L 100	1F	26	78.83	78.07	86	50	-	31	38	12	65
		28 L 100	1F	28	84.89	84.13	91	50	-	31	38	12	66
		30 L 100	1F	30	90.96	90.20	97	50	-	31	38	12	68
		32 L 100	1F	32	97.02	96.26	102	50	-	31	38	12	70
		36 L 100	7F	36	109.15	108.39	115	55	94	32	38	12	74
		40 L 100	7F	40	121.28	120.51	128	60	98	32	38	12	78
CAST-IRON		44 L 100	8F	44	133.40	132.64	142	60	108	32	-	12	81
		48 L 100	8F	48	145.53	144.77	150	60	118	32	-	12	85
	WITHOUT FLANGE	60 L 100	4	60	191.91	181.15	-	60	163	32	35	15	-
		72 L 100	4	72	218.30	217.53	-	60	199	32	35	15	-
		84 L 100	4	84	254.68	253.92	-	60	236	32	35	15	-

POWERGRIP® TOOTHED PULLEYS FOR SYNCHRONOUS BELTS

EXPORT "PHOSPHATED"

H 100 PITCH 1/2" (12.7mm.)

CHARACTERISTICS		TYPE	EXEC.	No. of TEETH	Dp PITCH LINE	De EXTERNAL	Df FLANGE	Dm HUB	Di	F	L	E	d Ø bore	FLANGE No.
STEEL	WITH FLANGE	14 H 100	1F	14	56.60	55.22	64	40	-	31	41	-	10	59
		16 H 100	1F	16	64.68	63.31	70	46	-	31	41	-	10	61
		18 H 100	1F	18	72.77	71.39	79	54	-	31	41	-	12	63
		19 H 100	1F	19	76.81	75.44	82.5	58	-	31	41	-	12	64
		20 H 100	1F	20	80.85	79.48	87	62	-	31	41	-	12	76
		21 H 100	1F	21	84.89	83.52	91	67	-	31	41	-	12	66
		22 H 100	1F	22	88.94	87.56	94	70	-	31	41	-	12	67
		24 H 100	1F	24	97.02	95.65	102	75	-	31	41	-	12	70
		26 H 100	7F	26	105.11	103.73	112	55	81	32	40	8	15	72
		28 H 100	7F	28	113.19	111.82	115	60	88	32	40	8	15	75
		30 H 100	7F	30	121.28	119.90	128	60	97	32	40	8	15	78
		32 H 100	6F	32	129.36	127.99	135	70	105	32	40	-	20	80
		36 H 100	6F	36	145.53	144.16	150	80	118	32	40	-	20	85
CAST-IRON		40 H 100	5F	40	161.70	160.33	168	80	135	32	40	-	20	90
		44 H 100	5F	44	177.87	176.50	184	80	150	32	40	-	20	95
		48 H 100	5F	48	194.04	192~67	200	80	170	32	40	-	20	100
	WITHOUT FLANGE	60 H 100	4	60	242.55	241.18	-	80	216	34	45	-	20	-
		72 H 100	4	72	291.06	289.69	-	80	263	34	45	-	20	-
		84 H 100	4	84	339.57	338.20	-	80	312	34	45	-	20	-
		96 H 100	4	96	388.08	386.71	-	80	360	34	45	-	20	-
		120 H 100	4	120	485.10	483.73	-	90	458	34	50	-	20	-

H 150 PITCH 1/2" (12.7mm.)

CHARACTERISTICS		TYPE	EXEC.	No. of TEETH	Dp PITCH LINE	De EXTERNAL	Df FLANGE	Dm HUB	Di	F	L	E	d Ø bore	FLANGE No.
STEEL	WITH FLANGE	14 H 150	1F	14	56.60	55.22	64	40	-	44	54	-	12	59
		16 H 150	1F	16	64.68	63.31	70	46	-	44	54	-	12	61
		18 H 150	1F	18	72.77	71.39	79	54	-	44	54	-	12	63
		19 H 150	1F	19	76.81	75.44	82.5	58	-	44	54	-	12	64
		20 H 150	1F	20	80.85	79.48	87	62	-	44	54	-	12	76
		21 H 150	1F	21	84.89	83.52	91	67	-	44	54	-	12	66
		22 H 150	1F	22	88.94	87.56	94	70	-	44	54	-	12	67
		24 H 150	1F	24	97.02	95.65	102	75	-	44	54	-	12	70
		26 H 150	7F	26	105.11	103.73	112	55	81	45	53	18	15	72
		28 H 150	7F	28	113.19	111.82	115	60	88	45	53	18	15	75
		30 H 150	7F	30	121.28	119.90	128	60	97	45	53	18	15	78
		32 H 150	6F	32	129.36	127.99	135	70	105	45	53	-	20	80
		36 H 150	6F	36	145.53	144.16	150	80	118	45	53	-	20	85
CAST-IRON		40 H 150	8F	40	161.7	160.33	168	80	135	45	-	-	20	90
		44 H 150	8F	44	177.87	176.50	184	80	150	45	-	-	20	95
		48 H 150	8F	48	194.04	192.67	200	80	170	45	-	-	20	100
	WITHOUT FLANGE	60 H 150	9	60	242.55	241.18	-	85	216	46	-	-	20	-
		72 H 150	9	72	291.06	289.69	-	85	263	46	-	-	20	-
		84 H 150	9	84	339.57	338.20	-	85	312	46	-	-	20	-
		96 H 150	9	96	388.08	386.71	-	85	360	46	-	-	20	-
		120 H 150	4	120	485.10	483.73	-	95	458	46	55	-	24	-

POWERGRIP® TOOTHED PULLEYS FOR SYNCHRONOUS BELTS

EXPORT "PHOSPHATED"

H 200 PITCH 1/2" (12.7mm.)

CHARACTERISTICS		TYPE	EXEC.	No. of TEETH	Dp PITCH LINE	De EXTERNAL	Df FLANGE	Dm HUB	Di	F	L	E	d Ø bore	FLANGE No.
STEEL	WITH FLANGE	14 H 200	1F	14	56.60	55.22	64	40	-	58	68	-	-	59
		16 H 200	1F	16	64.68	63.31	70	46	-	58	68	-	-	61
		18 H 200	1F	18	71.77	71.39	79	54	-	58	68	-	-	63
		19 H 200	1F	19	76.81	75.44	82.5	58	-	58	68	-	-	64
		20 H 200	1F	20	80.85	79.48	87	62	-	58	68	-	-	76
		21 H 200	1F	21	84.89	83.52	91	67	-	58	68	-	-	66
		22 H 200	1F	22	88.94	87.56	94	70	-	58	68	-	-	67
		24 H 200	1F	24	97.02	95.65	102	75	-	58	68	-	-	70
		26 H 200	7F	26	105.11	103.73	112	60	81	58	66	24	15	72
		28 H 200	7F	28	113.19	111.82	115	60	88	58	66	24	15	75
		30 H 200	7F	30	121.28	119.9o	128	70	97	58	66	24	15	78
		32 H 200	7F	32	129.36	127.99	135	70	105	58	66	19	20	80
		36 H 200	7F	36	145.53	144.16	150	80	118	58	66	19	20	85
CAST-IRON		40 H 200	10F	40	161.70	160.33	168	80	135	58	45	-	20	90
		44 H 200	10F	44	177.87	176.50	184	80	150	58	45	-	20	95
		48 H 200	10F	48	194.04	192.67	200	80	170	58	45	-	20	100
	WITHOUT FLANGE	60 H 200	11	60	242.55	241.18	-	90	216	60	50	-	20	-
		72 H 200	11	72	291.06	289.69	-	90	263	60	50	-	20	-
		84 H 200	11	84	339.57	338.20	-	90	312	60	50	-	20	-
		96 H 200	11	96	388.08	386.71	-	90	360	60	50	-	20	-
		120 H 200	9	120	485.10	483.73	-	100	458	60	-	-	24	-

H 300 PITCH 1/2" (12.7mm.)

CHARACTERISTICS		TYPE	EXEC.	No. of TEETH	Dp PITCH LINE	De EXTERNAL	Df FLANGE	Dm HUB	Di	F	L	E	d Ø bore	FLANGE No.
STEEL	WITH FLANGE	16 H 300	1F	16	64.68	63.31	70	46	-	84	94	-	-	61
		18 H 300	1F	18	71.77	71.39	79	54	-	84	94	-	-	63
		19 H 300	1F	19	76.81	75.44	82.5	58	-	84	94	-	-	64
		20 H 300	1F	20	80.85	79.48	87	62	-	84	94	-	-	76
		21 H 300	1F	21	84.89	83.52	91	67	-	84	94	-	-	66
		22 H 300	1F	22	88.94	87.56	94	70	-	84	94	-	-	67
		24 H 300	1F	24	97.02	95.65	102	75	-	84	94	-	-	70
		26 H 300	7F	26	105.11	103.73	112	60	81	84	92	35	15	72
		28 H 300	7F	28	113.19	111.82	115	60	88	84	92	35	15	75
		30 H 300	7F	30	121.28	119.90	128	70	97	84	92	35	15	78
		32 H 300	7F	32	129.36	127.99	135	70	105	84	92	35	20	80
		36 H 300	7F	36	145.53	144.16	150	80	118	84	92	35	20	85
CAST-IRON		40 H 300	10F	40	161.70	160.33	168	80	135	84	55	-	20	90
		44 H 300	10F	44	177.87	176.50	184	80	150	84	55	-	20	95
		48 H 300	10F	48	194.04	192.67	200	85	170	84	55	-	20	100
	WITHOUT FLANGE	60 H 300	11	60	242.55	241.18	-	100	216	86	55	-	20	-
		72 H 300	11	72	291.06	289.69	-	100	263	86	55	-	20	-
		84 H 300	11	84	339.57	338.20	-	100	312	86	55	-	20	-
		96 H 300	11	96	388.08	386.71	-	100	360	86	55	-	20	-
		120 H 300	11	120	485.10	483.73	-	110	458	86	65	-	24	-

TAPER-LOCK® PULLEYS "PHOSPHATED"

Materials used for construction:

Steel: C 40 UNI 7845
Cast iron: G 20 UNI 5007

How to interpret the code reference:

TL 30 L 100

TL	Taper Lock®
30	No. of teeth
L	belt pitch
100	belt width in inches

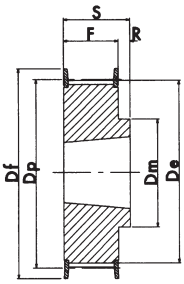

EXECUTION 1F

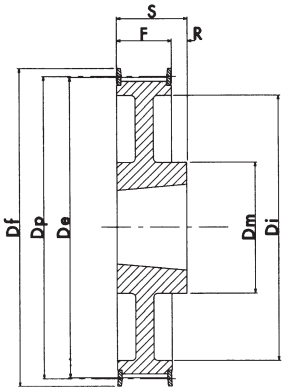

EXECUTION 2F

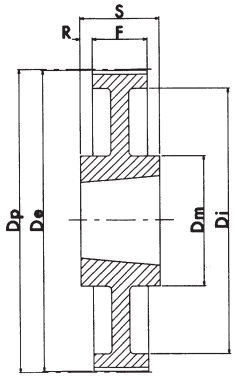

EXECUTION 3

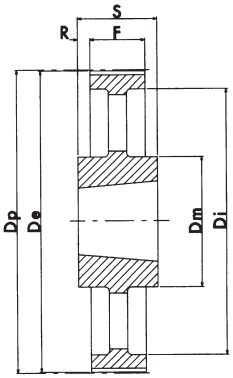

EXECUTION 4

L 050 PITCH 3/8" (9.52mm.)

CHARACTERISTICS		TYPE	EXEC.	BUSH	MAX BORE	Dp PITCH LINE	De EXTERNAL	D FLANGE	Dm HUB	Di	F	S	R	FLANGE No.
STEEL	WITH FLANGE	TL 18 L 050	1F	1108	28	54.57	53.81	60	45	-	19.0	22.0	3	58
		TL 19 L 050	1F	1108	28	57.61	56.84	64	45	-	19.0	22.0	3	59
		TL 20 L 050	1F	1108	28	60.64	59.88	66.5	48	-	19.0	22.0	3	60
		TL 21 L 050	1F	1108	28	63.67	62.91	70	48	-	19.0	22.0	3	61
		TL 22 L 050	1F	1108	28	66.70	65.94	75	51	-	19.0	22.0	3	62
		TL 23 L 050	1F	1108	28	69.73	68.97	79	54	-	19.0	22.0	3	63
		TL 24 L 050	1F	1108	28	72.77	72.00	79	54	-	19.0	22.0	3	63
		TL 25 L 050	1F	1108	28	75.80	75.04	82.5	56	-	19.0	22.0	3	64
		TL 26 L 050	1F	1108	28	78.83	78.07	86	60	-	19.0	22.0	3	65
		TL 27 L 050	1F	1108	28	81.86	81.10	86	62	-	19.0	22.0	3	65
		TL 28 L 050	1F	1108	28	84.89	84.13	91	65	-	19.0	22.0	3	66
		TL 30 L 050	1F	1108	28	90.96	90.20	97	70	-	19.0	22.0	3	68
		TL 32 L 050	1F	1108	28	97.02	96.26	102	74	-	19.0	22.0	3	70
		TL 36 L 050	1F	1108	28	109.15	108.39	115	85	-	19.0	22.0	3	74
		TL 40 L 050	1F	1610	42	121.28	120.51	128	97	-	19.0	25.0	6	78
		TL 44 L 050	2F	1610	42	133.40	132.64	142	88	110	19.0	25.0	6	81
		TL 48 L 050	2F	1610	42	145.53	147.77	150	88	120	19.0	25.0	6	85
CAST-IRON	WITHOUT FLANGE	TL 60 L 050	3	1610	42	181.91	181.15	-	92	166	19.0	25.0	3	-
		TL 72 L 050	4	1610	42	218.30	217.53	-	92	202	19.0	25.0	3	-
		TL 84 L 050	4	1610	42	254.68	253.90	-	92	236	19.0	25.0	3	-
		TL 96 L 050	4	2012	50	291.06	290.30	-	106	270	19.0	32.0	6.5	-
		TL 120 L 050	4	2012	50	363.83	363.07	-	106	343	19.0	32.0	6.5	-

TAPER-LOCK® PULLEYS "PHOSPHATED"

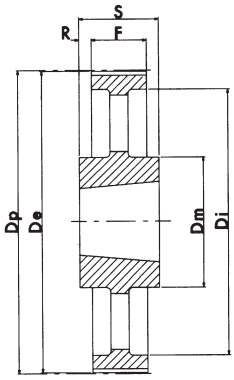

EXECUTION 4

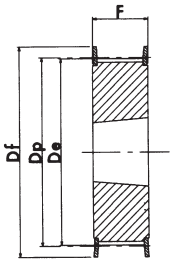

EXECUTION 5F

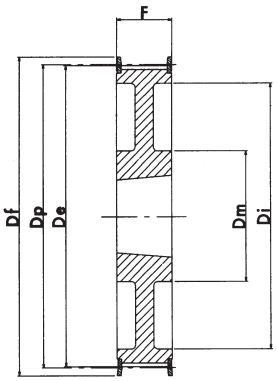

EXECUTION 6F

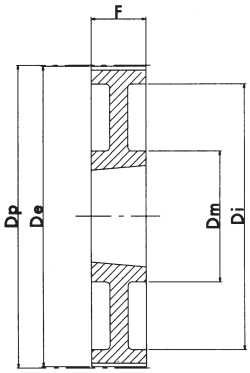

EXECUTION 7

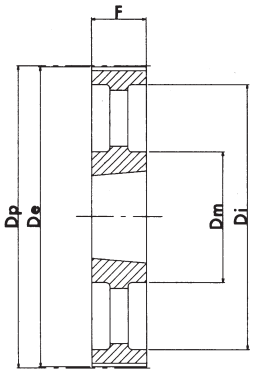

EXECUTION 8

TIPO: L 075 Passo 3/8" (9.52mm.)

CHARACTERISTICS		TYPE	EXEC.	BUSH	MAX BORE	Dp PITCH LINE	De EXTERNAL	D FLANGE	Dm HUB	Di	F	S	R	FLANGE No.
STEEL	WITH FLANGE	TL 18 L 075	5F	1108	28	54.57	53.81	60	-	-	25.0	25.0	-	58
		TL 19 L 075	5F	1108	28	57.61	56.84	64	-	-	25.0	25.0	-	59
		TL 20 L 075	5F	1108	28	60.64	59.88	66.5	-	-	25.0	25.0	-	60
		TL 21 L 075	5F	1108	28	63.67	62.91	70	-	-	25.0	25.0	-	61
		TL 22 L 075	5F	1108	28	66.70	65.94	75	-	-	25.0	25.0	-	62
		TL 23 L 075	5F	1108	28	69.73	68.97	79	-	-	25.0	25.0	-	63
		TL 24 L 075	5F	1108	28	72.77	72.00	79	-	-	25.0	25.0	-	63
		TL 25 L 075	5F	1108	28	75.80	75.04	82.5	-	-	25.0	25.0	-	64
		TL 26 L 075	5F	1108	28	78.83	78.07	86	-	-	25.0	25.0	-	65
		TL 27 L 075	5F	1108	28	81.86	81.10	86	-	-	25.0	25.0	-	65
		TL 28 L 075	5F	1108	28	84.89	84.13	91	-	-	25.0	25.0	-	66
		TL 30 L 075	5F	1108	28	90.96	90.20	97	-	-	25.0	25.0	-	68
		TL 32 L 075	5F	1108	28	97.02	96.26	102	-	-	25.0	25.0	-	70
		TL 36 L 075	5F	1610	42	109.15	108.39	115	-	-	25.0	25.0	-	74
		TL 40 L 075	5F	1610	42	121.28	120.51	128	-	-	25.0	25.0	-	78
		TL 44 L 075	6F	1610	42	133.40	132.64	142	90	110	25.0	25.0	-	81
		TL 48 L 075	6F	1610	42	145.53	144.77	150	92	120	25.0	25.0	-	85
CAST-IRON	WITHOUT FLANGE	TL 60 L 075	7	1610	42	181.91	181.15	-	92	166	25.0	25.0	-	-
		TL 72 L 075	8	1610	42	218.30	217.53	-	92	202	25.0	25.0	-	-
		TL 84 L 075	4	2012	50	254.68	253.90	-	106	236	25.0	32.0	3.5	-
		TL 96 L 075	4	2012	50	291.06	290.30	-	106	270	25.0	32.0	3.5	-
		TL 120 L 075	4	2012	50	363.83	363.07	-	106	343	25.0	32.0	3.5	-

TAPER-LOCK® PULLEYS "PHOSPHATED"

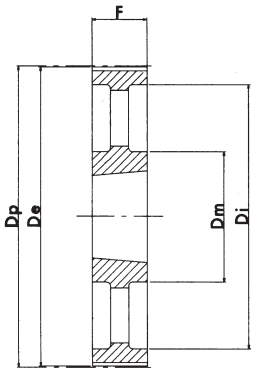

EXECUTION 8

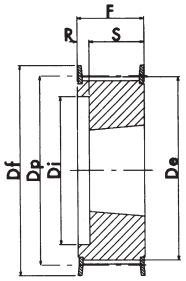

EXECUTION 9F

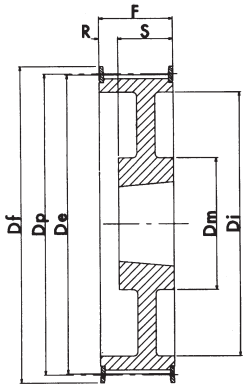

EXECUTION 10F

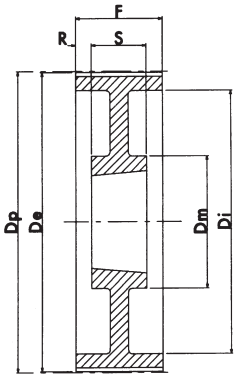

EXECUTION 11

L 100 PITCH 3/8" (9.52mm.)

CHARACTERISTICS		TYPE	EXEC.	BUSH	MAX BORE	Dp PITCH LINE	De EXTERNAL	D FLANGE	Dm HUB	Di	F	S	R	FLANGE No.
STEEL	WITH FLANGE	TL 18 L 100	9F	1108	28	54.57	53.81	60	-	38	31.0	22.0	9.0	58
		TL 19 L 100	9F	1108	28	57.61	56.84	64	-	38	31.0	22.0	9.0	59
		TL 20 L 100	9F	1108	28	60.64	59.88	66.5	-	45	31.0	22.0	9.0	60
		TL 21 L 100	9F	1108	28	63.67	62.91	70	-	45	31.0	22.0	9.0	61
		TL 22 L 100	9F	1108	28	66.70	65.94	75	-	48	31.0	22.0	9.0	62
		TL 23 L 100	9F	1108	28	69.73	68.97	79	-	52	32.0	22.0	10.0	63
		TL 24 L 100	9F	1108	28	72.77	72.00	79	-	52	32.0	22.0	10.0	63
		TL 25 L 100	9F	1108	28	75.80	75.04	82.5	-	54	32.0	22.0	10.0	64
		TL 26 L 100	9F	1108	28	78.83	78.07	86	-	60	32.0	22.0	10.0	65
		TL 27 L 100	9F	1108	28	81.86	81.10	86	-	60	32.0	22.0	10.0	65
		TL 28 L 100	9F	1108	28	84.89	84.13	91	-	65	32.0	22.0	10.0	66
		TL 30 L 100	9F	1210	32	90.96	90.20	97	-	71	32.0	25.0	7.0	68
		TL 32 L 100	9F	1210	32	97.02	96.26	102	-	75	32.0	25.0	7.0	70
		TL 36 L 100	9F	1610	42	109.15	108.39	115	-	86	32.0	25.0	7.0	74
		TL 40 L 100	9F	1610	42	121.28	120.51	128	-	96	32.0	25.0	7.0	78
		TL 44 L 100	10F	1610	42	133.40	132.64	142	90	110	32.0	25.0	7.0	81
		TL 48 L 100	10F	1610	42	145.53	144.77	150	92	120	32.0	25.0	7.0	85
CAST-IRON	WITHOUT FLANGE	TL 60 L 100	11	1610	42	181.91	181.15	-	92	166	32.0	25.0	3.5	-
		TL 72 L 100	8	2012	50	218.30	217.53	-	106	202	32.0	32.0	-	-
		TL 84 L 100	8	2012	50	254.68	253.90	-	106	236	32.0	32.0	-	-
		TL 96 L 100	8	2012	50	291.06	290.30	-	106	270	32.0	32.0	-	-
		TL 120 L 100	8	2012	50	363.83	363.07	-	106	343	32.0	32.0	-	-

TAPER-LOCK® PULLEYS "PHOSPHATED"

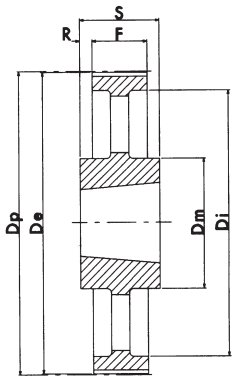

EXECUTION 4

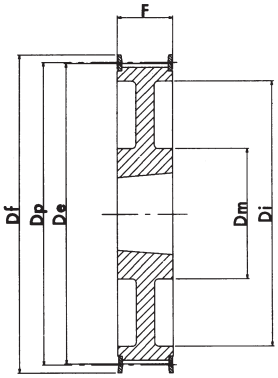

EXECUTION 6F

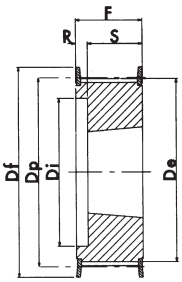

EXECUTION 9F

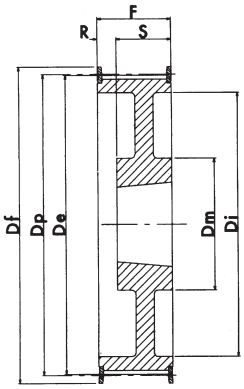

EXECUTION 10F

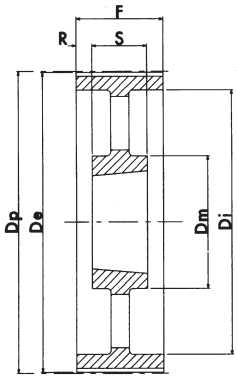

EXECUTION 12

H 100 PITCH 1/2" (12.7mm.)

CHARACTERISTICS		TYPE	EXEC.	BUSH	MAX BORE	Dp PITCH LINE	De EXTERNAL	D FLANGE	Dm HUB	Di	F	S	R	FLANGE No.
STEEL	WITH FLANGE	TL 16 H 100	9F	1108	28	64.68	63.31	70	-	45	31.0	22.0	9.0	61
		TL 18 H 100	9F	1210	32	72.77	71.39	79	-	52	31.0	25.0	6.0	63
		TL 19 H 100	9F	1210	32	76.81	74.44	82.5	-	56	31.0	25.0	6.0	64
		TL 20 H 100	9F	1210	32	80.55	79.48	87	-	60	31.0	25.0	6.0	76
		TL 21 H 100	9F	1210	32	84.89	83.52	91	-	64	32.0	25.0	7.0	66
		TL 22 H 100	9F	1210	32	88.94	87.56	94	-	67	32.0	25.0	7.0	67
		TL 23 H 100	9F	1610	42	92.98	91.61	97	-	70	32.0	25.0	7.0	68
		TL 24 H 100	9F	1610	42	97.02	95.65	102	-	73.5	32.0	25.0	7.0	70
		TL 25 H 100	9F	1610	42	101.06	99.69	106	-	77	32.0	25.0	7.0	71
		TL 26 H 100	9F	1610	42	105.11	103.73	112	-	82	32.0	25.0	7.0	72
		TL 27 H 100	9F	1610	42	109.15	107.78	115	-	85	32.0	25.0	7.0	74
		TL 28 H 100	9F	1610	42	113.19	111.82	120	-	90.5	32.0	25.0	7.0	75
		TL 30 H 100	9F	1610	42	121.28	119.90	128	-	98	32.0	25.0	7.0	78
		TL 32 H 100	10F	1610	42	129.36	127.99	135	80	106	32.0	25.0	7.0	80
		TL 36 H 100	10F	1610	42	145.53	144.16	150	92	121	32.0	25.0	7.0	85
		TL 40 H 100	10F	1610	42	161.70	160.33	168	92	138	32.0	25.0	7.0	90
		TL 44 H 100	6F	2012	50	177.87	176.50	184	106	152	32.0	32.0	-	95
		TL 48 H 100	6F	2012	50	194.04	192.67	200	106	169	32.0	32.0	-	100
CAST-IRON	WITHOUT FLANGE	TL 60 H 100	12	2012	50	242.55	241.18	-	106	223	34.0	32.0	1.0	-
		TL 72 H 100	12	2012	50	291.06	289.69	-	106	270	34.0	32.0	1.0	-
		TL 84 H 100	12	2012	50	339.57	338.20	-	106	318	34.0	32.0	1.0	-
		TL 96 H 100	4	2517	60	388.08	386.71	-	119	366	34.0	45.0	5.5	-
		TL 120 H 100	4	2517	60	485.10	483.73	-	119	462	34.0	45.0	5.5	-

TAPER-LOCK® PULLEYS "PHOSPHATED"

H 150 PITCH 1/2" (12.7mm.)

CHARACTERISTICS		TYPE	EXEC.	BUSH	MAX BORE	Dp PITCH LINE	De EXTERNAL	D FLANGE	Dm HUB	Di	F	S	R	FLANGE No.
STEEL	WITH FLANGE	TL 18 H 150	9F	1210	32	72.77	71.39	79	-	52	45.0	25.0	20.0	63
		TL 19 H 150	9F	1210	32	76.81	74.44	82.5	-	56	45.0	25.0	20.0	64
		TL 20 H 150	9F	1210	32	80.55	79.48	87	-	60	45.0	25.0	20.0	76
		TL 21 H 150	9F	1210	32	84.89	83.52	91	-	64	45.0	25.0	20.0	66
		TL 22 H 150	9F	1210	32	88.94	87.56	94	-	67	45.0	25.0	20.0	67
		TL 23 H 150	9F	1610	42	92.98	91.61	97	-	70	45.0	25.0	20.0	68
		TL 24 H 150	9F	1610	42	97.02	95.65	102	-	73.5	45.0	25.0	20.0	70
		TL 25 H 150	9F	1610	42	101.06	99.69	106	-	77	45.0	25.0	20.0	71
		TL 26 H 150	9F	1610	42	105.11	103.73	112	-	82	45.0	25.0	20.0	72
		TL 27 H 150	9F	1610	42	109.15	107.78	115	-	85	45.0	25.0	20.0	74
		TL 28 H 150	9F	1610	42	113.19	111.82	120	-	90.5	45.0	25.0	20.0	75
		TL 30 H 150	9F	1610	42	121.28	119.90	128	-	98	45.0	25.0	20.0	78
		TL 32 H 150	10F	1610	42	129.36	127.99	135	80	106	45.0	25.0	20.0	80
		TL 36 H 150	10F	1610	42	145.53	144.16	150	92	121	45.0	25.0	20.0	85
		TL 40 H 150	10F	1610	42	161.70	160.33	168	92	138	45.0	25.0	20.0	90
		TL 44 H 150	10F	2012	50	177.87	176.50	184	106	152	45.0	32.0	13.0	95
		TL 48 H 150	10F	2012	50	194.04	192.67	200	106	169	45.0	32.0	13.0	100
CAST-IRON	WITHOUT FLANGE	TL 60 H 150	12	2012	50	242.55	241.18	-	106	223	46.0	32.0	7.0	-
		TL 72 H 150	12	2012	50	291.06	289.69	-	106	270	46.0	32.0	7.0	-
		TL 84 H 150	12	2012	50	339.57	338.20	-	106	318	46.0	32.0	7.0	-
		TL 96 H 150	12	2517	60	388.08	386.71	-	119	366	46.0	45.0	0.5	-
		TL 120 H 150	12	2517	60	485.10	483.73	-	119	462	46.0	45.0	0.5	-

H 200 PITCH 1/2" (12.7mm.)

CHARACTERISTICS		TYPE	EXEC.	BUSH	MAX BORE	Dp PITCH LINE	De EXTERNAL	D FLANGE	Dm HUB	Di	F	S	R	FLANGE No.
STEEL	WITH FLANGE	TL 18 H 200	9F	1210	32	72.77	71.39	79	-	52	58.0	25.0	33.0	63
		TL 19 H 200	9F	1210	32	76.81	74.44	82.5	-	56	58.0	25.0	33.0	64
		TL 20 H 200	9F	1610	42	80.85	79.48	87	-	62	58.0	25.0	33.0	76
		TL 21 H 200	9F	1610	42	84.89	83.52	91	-	64	58.0	25.0	33.0	66
		TL 22 H 200	9F	1610	42	88.94	87.56	94	-	67	58.0	25.0	33.0	67
		TL 23 H 200	9F	1610	42	92.98	91.61	97	-	70	58.0	25.0	33.0	68
		TL 24 H 200	9F	1610	42	97.02	95.65	102	-	73.5	58.0	25.0	33.0	70
		TL 25 H 200	9F	1610	42	101.06	99.69	106	-	77.0	58.0	25.0	33.0	71
		TL 26 H 200	9F	1610	42	105.11	103.73	112	-	82	58.0	25.0	33.0	72
		TL 27 H 200	9F	1610	42	109.15	107.78	115	-	85	58.0	25.0	33.0	74
		TL 28 H 200	9F	1610	42	113.19	111.82	120	-	90.5	58.0	25.0	33.0	75
		TL 30 H 200	9F	1610	42	121.28	119.90	128	-	98	58.0	25.0	33.0	78
		TL 32 H 200	9F	2012	50	129.36	127.99	135		106	58.0	32.0	26.0	80
		TL 36 H 200	10F	2012	50	145.53	144.16	150	102	121	58.0	32.0	26.0	85
		TL 40 H 200	10F	2012	50	161.70	160.33	168	106	138	58.0	32.0	26.0	90
		TL 44 H 200	10F	2012	50	177.87	176.50	184	106	152	58.0	32.0	26.0	95
		TL 48 H 200	10F	2517	60	194.04	192.67	200	119	168	58.0	45.0	13.0	100
CAST-IRON	WITHOUT FLANGE	TL 60 H 200	12	2517	60	242.55	241.18	-	119	223	60.0	45.0	7.5	-
		TL 72 H 200	12	2517	60	291.06	289.69	-	119	270	60.0	45.0	7.5	-
		TL 84 H 200	12	2517	60	339.57	338.20	-	119	320	60.0	45.0	7.5	-
		TL 96 H 200	12	2517	60	388.08	386.71	-	119	366	60.0	45.0	7.5	-
		TL 120 H 200	12	2517	60	485.10	483.73	-	119	462	60.0	45.0	7.5	-

TAPER-LOCK® PULLEYS "PHOSPHATED"

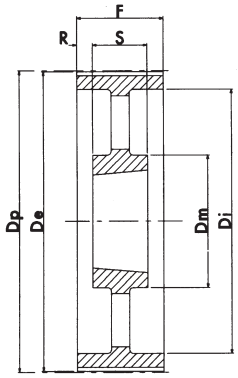

EXECUTION 12

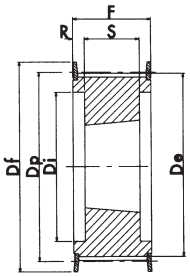

EXECUTION 13F

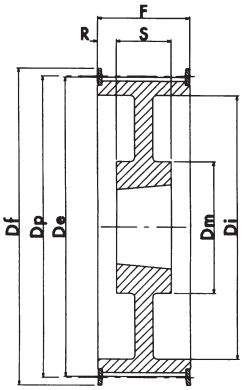

EXECUTION 14F

H 300 PITCH 1/2" (12.7mm.)

CHARACTERISTICS		TYPE	EXEC.	BUSH	MAX BORE	Dp PITCH LINE	De EXTERNAL	D FLANGE	Dm HUB	Di	F	S	R	FLANGE No.
STEEL	WITH FLANGE	TL 20 H 300	13F	1615	42	80.85	79.48	87	-	64.5	84.0	38.0	23.0	76
		TL 21 H 300	13F	1615	42	84.89	83.52	91	-	65	84.0	38.0	23.0	66
		TL 22 H 300	13F	1615	42	88.94	87.56	94	-	67	84.0	38.0	23.0	67
		TL 23 H 300	13F	1615	42	92.98	91.61	97	-	70	84.0	38.0	23.0	68
		TL 24 H 300	13F	1615	42	97.02	95.65	102	-	73.5	84.0	38.0	23.0	70
		TL 25 H 300	13F	1615	42	101.06	99.69	106	-	77	84.0	38.0	23.0	71
		TL 26 H 300	13F	1615	42	105.11	103.73	112	-	82	84.0	38.0	23.0	72
		TL 27 H 300	13F	2012	50	109.15	107.78	115	-	85	84.0	32.0	26.0	74
		TL 28 H 300	13F	2012	50	113.19	111.82	120	-	90.5	84.0	32.0	26.0	75
		TL 30 H 300	13F	2012	50	121.28	119.90	128	-	98	84.0	32.0	26.0	78
		TL 32 H 300	13F	2517	60	129.36	127.99	135	-	106	84.0	45.0	19.5	80
		TL 36 H 300	13F	2517	60	145.53	144.16	150	-	121	84.0	45.0	19.5	85
		TL 40 H 300	13F	2517	60	161.70	160.33	168	-	138	84.0	45.0	19.5	90
		TL 44 H 300	14F	2517	60	177.87	176.50	184	119	150	86.0	45.0	20.5	95
		TL 48 H 300	14F	2517	60	194.04	192.67	200	119	165	86.0	45.0	20.5	100
CAST-IRON	WITHOUT FLANGE	TL 60 H 300	12	2517	60	242.55	241.18	-	119	223	86.0	45.0	20.5	-
		TL 72 H 300	12	2517	60	291.06	289.69	-	119	270	86.0	45.0	20.5	-
		TL 84 H 300	12	2517	60	339.57	338.20	-	119	320	86.0	45.0	20.5	-
		TL 96 H 300	12	3030	75	388.08	386.71	-	150	362	86.0	76.0	5.0	-
		TL 120 H 300	12	3030	75	485.10	483.73	-	150	460	86.0	76.0	5.0	-

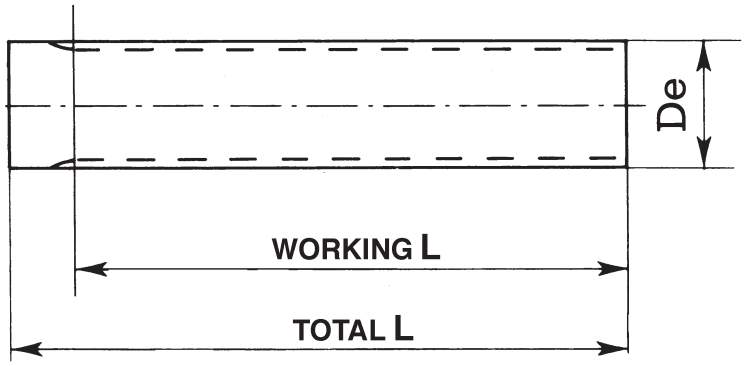

MXL 0.080" (2.032 mm.)

DESCRIPTION	No. of TEETH	De EXTERNAL	L WORKING	L TOTAL
MXL 12	12	7.26	50	75
MXL 14	14	8.56	50	75
MXL 15	15	9.19	50	75
MXL 16	16	9.83	50	75
MXL 18	18	11.12	50	75
MXL 20	20	12.42	90	120
MXL 22	22	13.72	125	140
MXL 24	24	15.01	125	140
MXL 25	25	15.67	125	140
MXL 26	26	16.31	125	140
MXL 28	28	17.60	125	140
MXL 30	30	18.90	125	140
MXL 32	32	20.19	125	140
MXL 34	34	21.49	125	140
MXL 36	36	22.78	132	140
MXL 38	38	24.08	132	140
MXL 40	40	25.37	132	140
MXL 42	42	26.67	140	140
MXL 44	44	27.94	140	140
MXL 45	45	28.60	140	140
MXL 48	48	30.53	140	140
MXL 50	50	31.83	140	140
MXL 60	60	38.30	160	160
MXL 70	70	44.78	160	160
MXL 72	72	46.05	160	160

XL 1/5" (5.08 mm.)

DESCRIPTION	No. of TEETH	De EXTERNAL	L WORKING	L TOTAL
XL 10	10	15.66	125	140
XL 11	11	17.28	125	140
XL 12	12	18.90	125	140
XL 13	13	20.51	125	140
XL 14	14	22.13	132	140
XL 15	15	23.75	132	140
XL 16	16	25.36	140	140
XL 17	17	26.98	140	140
XL 18	18	28.60	140	140
XL 19	19	30.22	140	140
XL 20	20	31.83	140	140
XL 21	21	33.45	160	160
XL 22	22	35.07	160	160
XL 23	23	36.60	160	160
XL 24	24	38.30	160	160
XL 25	25	39.93	160	160
XL 26	26	41.53	160	160
XL 27	27	43.15	160	160
XL 28	28	44.77	160	160
XL 29	29	46.39	160	160
XL 30	30	48.00	160	160
XL 32	32	51.24	160	160
XL 33	33	52.76	160	160
XL 34	34	54.47	160	160
XL 35	35	56.09	160	160
XL 36	36	57.70	160	160
XL 38	38	60.94	160	160
XL 39	39	62.56	160	160
XL 40	40	64.17	160	160
XL 41	41	65.79	160	160
XL 42	42	67.41	160	160
XL 43	43	69.02	160	160
XL 44	44	70.64	160	160
XL 48	48	77.11	160	160
XL 56	56	90.04	160	160
XL 60	60	96.51	160	160
XL 72	72	115.92	160	160

L 3/8" (9.525 mm.)

DESCRIPTION	No. of TEETH	De EXTERNAL	L WORKING	L TOTAL
L 10	10	29.56	140	140
L 11	11	32.59	140	140
L 12	12	35.62	160	160
L 13	13	38.65	160	160
L 14	14	41.68	160	160
L 15	15	44.72	160	160
L 16	16	47.75	160	160
L 17	17	50.78	160	160
L 18	18	53.81	160	160
L 19	19	56.84	160	160
L 20	20	59.88	160	160
L 21	21	62.91	160	160
L 22	22	65.94	160	160
L 23	23	68.97	160	160
L 24	24	72.00	160	160
L 27	27	81.10	160	160
L 30	30	90.20	160	160

N.B.
The MXL pitch bars are only manufactured in Aluminium suitable for hard anodysing.
The XL – L bars are only manufactured in Steel and Aluminium suitable for hard anodysing.

HTD® PILOT BORE "PHOSPHATED" PULLEYS

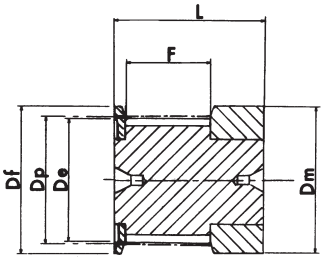

EXECUTION 0F

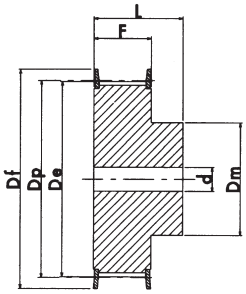

EXECUTION 1F

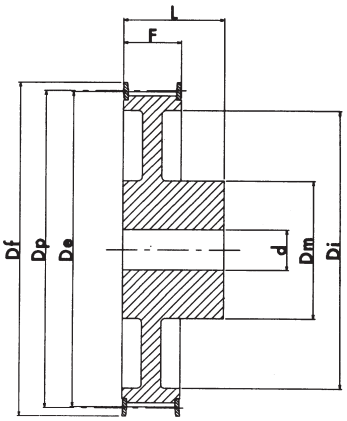

EXECUTION 2F

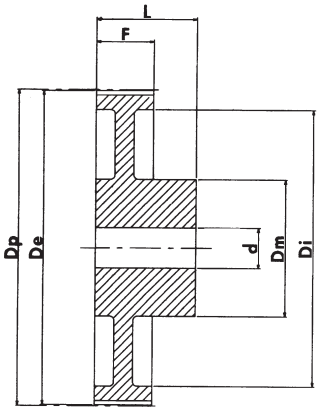

EXECUTION 3

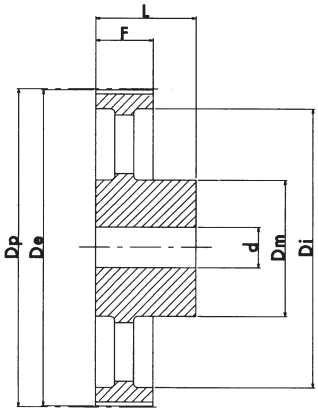

EXECUTION 4

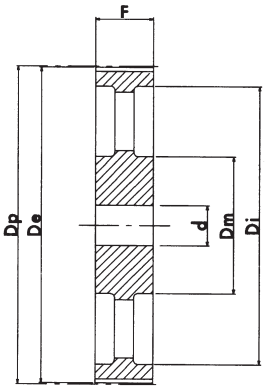

EXECUTION 5

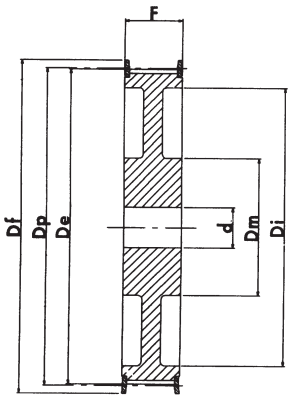

EXECUTION 6F

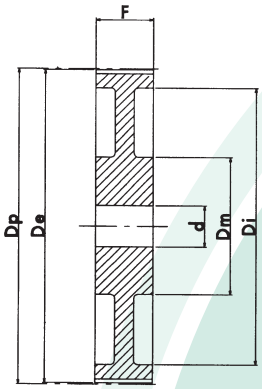

EXECUTION 7

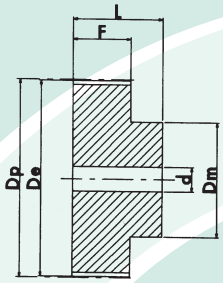

EXECUTION 8

HTD® PILOT BORE "PHOSPHATED" PULLEYS

HTD® 3M 09

CHARACTERISTICS		TYPE	No. of TEETH	EXEC.	Dp PITCH LINE	De EXTERNAL	Df FLANGE	Dm HUB	F	L	d bore Ø	FLANGE No.
ALUMINIUM	WITH FLANGE	10-3M-09	10	0F	9.55	8.79	13.0	13.0	10.2	17.5	-	501
		12-3M-09	12	0F	11.46	10.70	15.0	15.0	10.2	17.5	-	502
		14-3M-09	14	0F	13.37	12.61	16.0	16.0	10.2	17.5	-	503
		15-3M-09	15	0F	14.32	13.56	17.5	17.5	10.2	17.5	-	516
		16-3M-09	16	1F	15.28	14.52	17.5	10.0	12.8	20.6	4.0	504
		18-3M-09	18	1F	17.19	16.43	20.0	11.0	12.8	20.6	6.0	505
		20-3M-09	20	1F	19.10	18.34	23.0	13.0	12.8	20.6	6.0	517
		21-3M-09	21	1F	20.05	19.29	25.0	14.0	12.8	20.6	6.0	518
		22-3M-09	22	1F	21.01	20.25	25.0	14.0	12.8	20.6	6.0	518
		24-3M-09	24	1F	22.92	22.16	25.0	14.0	12.8	20.6	6.0	518
		26-3M-09	26	1F	24.83	24.07	28.0	16.0	12.8	20.6	6.0	508
		28-3M-09	28	1F	26.74	25.98	32.0	18.0	12.8	20.6	6.0	509
		30-3M-09	30	1F	28.65	27.89	32.0	20.0	12.8	20.6	6.0	509
		32-3M-09	32	1F	30.56	29.80	36.0	22.0	12.8	20.6	6.0	510
		36-3M-09	36	1F	34.38	33.62	39.0	26.0	13.4	22.2	6.0	519
		40-3M-09	40	1F	38.20	37.44	42.0	28.0	13.4	22.2	6.0	513
		44-3M-09	44	1F	42.02	41.26	48.0	33.0	13.4	22.2	6.0	520
	WITHOUT FLANGE	48-3M-09	48	8	45.84	45.08	-	33.0	13.4	22.2	8.0	-
		60-3M-09	60	8	57.30	56.54	-	33.0	13.4	22.2	8.0	-
		72-3M-09	72	8	68.75	67.99	-	33.0	13.4	22.2	8.0	-

HTD® 3M 15

CHARACTERISTICS		TYPE	No. of TEETH	EXEC.	Dp PITCH LINE	De EXTERNAL	Df FLANGE	Dm HUB	F	L	d bore Ø	FLANGE No.
ALUMINIUM	WITH FLANGE	10-3M-15	10	0F	9.55	8.79	13.0	13.0	17.0	26.0	-	501
		12-3M-15	12	0F	11.46	10.70	15.0	15.0	17.0	26.0	-	502
		14-3M-15	14	0F	13.37	12.61	16.0	16.0	17.0	26.0	-	503
		15-3M-15	15	0F	14.32	13.56	17.5	17.5	17.0	26.0	-	516
		16-3M-15	16	1F	15.28	14.52	17.5	10.0	19.5	26.0	4.0	504
		18-3M-15	18	1F	17.19	16.43	20.0	11.0	19.5	26.0	6.0	505
		20-3M-15	20	1F	19.10	18.34	23.0	13.0	19.5	26.0	6.0	517
		21-3M-15	21	1F	20.05	19.29	25.0	14.0	19.5	26.0	6.0	518
		22-3M-15	22	1F	21.01	20.25	25.0	14.0	19.5	26.0	6.0	518
		24-3M-15	24	1F	22.92	22.16	25.0	14.0	19.5	26.0	6.0	518
		26-3M-15	26	1F	24.83	24.07	28.0	16.0	19 5	26.0	6.0	508
		28-3M-15	28	1F	26.74	25.98	32.0	18.0	19.5	26.0	6.0	509
		30-3M-15	30	1F	28.65	27.89	32.0	20.0	19.5	26.0	6.0	509
		32-3M-15	32	1F	30.56	29.80	36.0	22.0	19.5	26.0	6.0	510
		36-3M-15	36	1F	34.38	33.62	39.0	26.0	20.0	30.0	6.0	519
		40-3M-15	40	1F	38.20	37.44	42.0	28.0	20.0	30.0	6.0	513
		44-3M-15	44	1F	42.02	41.26	48.0	33.0	20.0	30.0	6.0	520
	WITHOUT FLANGE	48-3M-15	48	8	45.84	45.08	-	33.0	20.0	30.0	8.0	-
		60-3M-15	60	8	57.30	56.54	-	33.0	20.0	30.0	8.0	-
		72-3M-15	72	8	68.75	67.99	-	33.0	20.0	30.0	8.0	-

HTD® PILOT BORE "PHOSPHATED" PULLEYS

HTD® 5M 09

CHARACTERISTICS		TYPE	No. of TEETH	EXEC.	Dp PITCH LINE	De EXTERNAL	Df FLANGE	Dm HUB	Di	F	L	d bore Ø	FLANGE No.
STEEL	WITH FLANGE	12-5M-09	12	1F	19.10	17.96	23.0	13.0	-	14.5	20.0	4.0	14
		14-5M-09	14	1F	22.28	21.14	25.0	13.0	-	14.5	20.0	6.0	2
		15-5M-09	15	1F	23.87	22.73	28.0	16.0	-	14.5	20.0	6.0	4
		16-5M-09	16	1F	25.46	24.32	28.0	16.5	-	14.5	20.0	6.0	4
		18-5M-09	18	1F	28.65	27.51	32.0	20.0	-	14.5	20.0	6.0	6
		20-5M-09	20	1F	31.83	30.69	36.0	23.0	-	14.5	22.5	6.0	8
		21-5M-09	21	1F	33.42	32.28	38.0	24.0	-	14.5	22.5	6.0	9
		22-5M-09	22	1F	35.01	33.87	39.0	25.5	-	14.5	22.5	6.0	15
		24-5M-09	24	1F	38.20	37.06	42.0	27.0	-	14.5	22.5	6.0	13
		26-5M-09	26	1F	41.38	40.24	44.0	30.0	-	14.5	22.5	6.0	12
		28-5M-09	28	1F	44.56	43.42	48.0	30.5	-	14.5	22.5	6.0	11
		30-5M-09	30	1F	47.75	46.60	51.0	35.0	-	14.5	22.5	6.0	16
		32-5M-09	32	1F	50.93	49.79	54.0	38.0	-	14.5	22.5	8.0	18
		36-5M-09	36	1F	57.30	56.16	60.0	38.0	-	14.5	22.5	8.0	21
		40-5M-09	40	1F	63.66	62.52	71.0	38.0	-	14.5	22.5	8.0	25
ALUMINIUM	WITHOUT FLANGE	44-5M-09	44	3	70.03	68.89	-	38.0	54	14.5	25.5	8.0	-
		48-5M-09	48	3	76.39	75.25	-	45.0	61	14.5	25.5	8.0	-
		60-5M-09	60	3	95.49	94.35	-	45.0	80	14.5	25.5	8.0	-
		72-5M-09	72	3	114.59	113.45	-	45.0	100	14.5	25.5	8.0	-

HTD® 5M 15

CHARACTERISTICS		TYPE	No. of TEETH	EXEC.	Dp PITCH LINE	De EXTERNAL	Df FLANGE	Dm HUB	Di	F	L	d bore Ø	FLANGE No.
STEEL	WITH FLANGE	12-5M-15	12	1F	19.10	17.96	23.0	13.0	-	20.5	26.0	-	14
		14-5M-15	14	1F	22.28	21.14	25.0	13.0	-	20.5	26.0	6.0	2
		15-5M-15	15	1F	23.87	22.73	28.0	16.0	-	20.5	26.0	6.0	4
		16-5M-15	16	1F	25.46	24.32	28.0	16.5	-	20.5	26.0	6.0	4
		18-5M-15	18	1F	28.65	27.51	32.0	20.0	-	20.5	26.0	6.0	6
		20-5M-15	20	1F	31.83	30.69	36.0	23.0	-	20.5	26.0	6.0	8
		21-5M-15	21	1F	33.42	32.28	38.0	24.0	-	20.5	26.0	6.0	9
		22-5M-15	22	1F	35.01	33.87	39.0	25.5	-	20.5	26.0	6.0	15
		24-5M-15	24	1F	38.20	37.06	42.0	27.0	-	20.5	28.0	6.0	13
		26-5M-15	26	1F	41.38	40.24	44.0	30.0	-	20.5	28.0	6.0	12
		28-5M-15	28	1F	44.56	43.42	48.0	30.5	-	20.5	28.0	6.0	11
		30-5M-15	30	1F	47.75	46.60	51.0	35.0	-	20.5	28.0	6.0	16
		32-5M-15	32	1F	50.93	49.79	54.0	38.0	-	20.5	28.0	8.0	18
		36-5M-15	36	1F	57.30	56.16	60.0	38.0	-	20.5	28.0	8.0	21
		40-5M-15	40	1F	63.66	62.52	71.0	38.0	-	20.5	28.0	8.0	25
ALUMINIUM	WITHOUT FLANGE	44-5M-15	44	3	70.03	68.89	-	38.0	54	20.5	30.0	8.0	-
		48-5M-15	48	3	76.39	75.25	-	38.0	61	20.5	30.0	8.0	-
		60-5M-15	60	3	95.49	94.35	-	50.0	80	20.5	30.0	8.0	-
		72-5M-15	72	3	114.59	113.45	-	50.0	100	20.5	30.0	8.0	-

N.B. Aluminium pulleys are not phosphated.

PULEGGE CON FORO INIZIALE PER CINGHIE DENTATE POWERGRIP® HTD® "FOSFATATE"

HTD® 5M 25

CHARACTERISTICS		TYPE	No. of TEETH	EXEC.	Dp PITCH LINE	De EXTERNAL	Df FLANGE	Dm HUB	Di	F	L	d bore Ø	FLANGE No.
STEEL	WITH FLANGE	12-5M-25	12	1F	19.10	17.96	23.0	13.0	-	30.5	36	-	14
		14-5M-25	14	1F	22.28	21.14	25.0	13.0	-	30.5	36	6.0	2
		15-5M-25	15	1F	23.87	22.73	28.0	16.0	-	30.5	36	6.0	4
		16-5M-25	16	1F	25.46	24.32	28.0	16.5	-	30.5	36	6.0	4
		18-5M-25	18	1F	28.65	27.51	32.0	20.0	-	30.5	36	6.0	6
		20-5M-25	20	1F	31.83	30.69	36.0	23.0	-	30.5	36	6.0	8
		21-5M-25	21	1F	33.42	32.28	38.0	24.0	-	30.5	38	6.0	9
		22-5M-25	22	1F	35.01	33.87	39.0	25.5	-	30.5	38	6.0	15
		24-5M-25	24	1F	38.20	37.06	42.0	27.0	-	30.5	38	6.0	13
		26-5M-25	26	1F	41.38	40.24	44.0	30.0	-	30.5	38	6.0	12
		28-5M-25	28	1F	44.56	43.42	48.0	30.5	-	30.5	38	6.0	11
		30-5M-25	30	1F	47.75	46.60	51.0	35.0	-	30.5	38	6.0	16
		32-5M-25	32	1F	50.93	49.79	54.0	38.0	-	30.5	38	8.0	18
		36-5M-25	36	1F	57.30	56.16	60.0	38.0	-	30.5	38	8.0	21
		40-5M-25	40	1F	63.66	62.52	71.0	38.0	-	30.5	38	8.0	25
ALUMINIUM	WITHOUT FLANGE	44-5M-25	44	8	70.03	68.89	-	38.0	-	30.5	40	8.0	-
		48-5M-25	48	3	76.39	75.25	-	38.0	61	30.5	40	8.0	-
		60-5M-25	60	3	95.49	94.35	-	50.0	80	30.5	40	8.0	-
		72-5M-25	72	3	114.59	113.45	-	50.0	100	30.5	40	8.0	-

HTD® 8M 20

CHARACTERISTICS		TYPE	No. of TEETH	EXEC.	Dp PITCH LINE	De EXTERNAL	Df FLANGE	Dm HUB	Di	F	L	d bore Ø	FLANGE No.
STEEL	WITH FLANGE	22-8M-20	22	1F	56.02	54.65	60	43	-	28	38	12	53
		24-8M-20	24	1F	61.12	59.75	66	45	-	28	38	12	69
		26-8M-20	26	1F	66.21	64.85	70	48	-	28	38	12	61
		28-8M-20	28	1F	71.30	70.08	75	50	-	28	38	15	79
		30-8M-20	30	1F	76.39	75.13	83	55	-	28	38	15	73
		32-8M-20	32	1F	81.49	80.16	87	60	-	28	38	15	76
		34-8M-20	34	1F	86.58	85.22	91	66	-	28	38	15	66
		36-8M-20	36	1F	91.67	90.30	97	70	-	28	38	15	68
		38-8M-20	38	1F	96.77	95.39	102	75	-	28	38	15	70
		40-8M-20	40	1F	101.86	100.49	106	75	-	28	38	15	77
		44-8M-20	44	1F	112.05	110.67	120	75	-	28	38	15	75
		48-8M-20	48	1F	122.23	120.86	128	75	-	28	38	15	78
		56-8M-20	56	2F	142.60	141.23	150	80	116	28	38	15	85
		64-8M-20	64	2F	162.97	161.60	168	80	137	28	38	15	90
		72-8M-20	72	2F	183.35	181.97	192	80	158	28	38	15	97
ALUMINIUM	WITHOUT FLANGE	80-8M-20	80	3	203.72	202.35	-	90	180	28	38	15	-
		90-8M-20	90	3	229.18	227.81	-	90	204	28	38	15	-
		*112-8M-20	112	4	285.21	283.83	-	90	254	28	38	18	-
		*144-8M-20	144	4	366.69	365.32	-	90	336	28	38	20	-
		*168-8M-20	168	4	427.81	426.44	-	100	400	28	38	20	-
		*192-8M-20	192	4	488.92	487.55	-	100	460	28	38	20	-

* Toothing marked with an asterisk are produced on request

HTD® PILOT BORE "PHOSPHATED" PULLEYS

HTD® 8M 30

CHARACTERISTICS		TYPE	No. of TEETH	EXEC.	Dp PITCH LINE	De EXTERNAL	Df FLANGE	Dm HUB	Di	F	L	d bore Ø	FLANGE No.
STEEL	WITH FLANGE	22-8M-30	22	1F	56.02	54.65	60	43	-	38	48	12	53
		24-8M-30	24	1F	61.12	59.75	66	45	-	38	48	12	69
		26-8M-30	26	1F	66.21	64.85	70	48	-	38	48	12	61
		28-8M-30	28	1F	71.30	70.08	75	50	-	38	48	15	79
		30-8M-30	30	1F	76.39	75.13	83	55	-	38	48	15	73
		32-8M-30	32	1F	81.49	80.16	87	60	-	38	48	15	76
		34-8M-30	34	1F	86.58	85.22	91	66	-	38	48	15	66
		36-8M-30	36	1F	91.67	90.30	97	70	-	38	48	15	68
		38-8M-30	38	1F	96.77	95.39	102	75	-	38	48	15	70
		40-8M-30	40	1F	101.86	100.49	106	75	-	38	48	15	77
		44-8M-30	44	1F	112.05	110.67	120	75	-	38	48	15	75
		48-8M-30	48	1F	122.23	120.86	128	75	-	38	48	15	78
		56-8M-30	56	2F	142.60	141.23	150	90	116	38	48	15	85
		64-8M-30	64	2F	162.97	161.60	168	90	137	38	48	15	90
		72-8M-30	72	2F	183.35	181.97	192	95	158	38	48	15	97
CAST IRON	WITHOUT FLANGE	80-8M-30	80	3	203.72	202.35	-	100	180	38	48	15	-
		90-8M-30	90	3	229.18	227.81	-	100	204	38	48	15	-
		112-8M-30	112	4	285.21	283.83	-	100	254	38	48	18	-
		144-8M-30	144	4	366.69	365.32	-	100	336	38	48	20	-
		168-8M-30	168	4	427.81	426.44	-	100	400	38	48	20	-
		192-8M-30	192	4	488.92	487.55	-	100	460	38	48	20	-

HTD® 8M 50

CHARACTERISTICS		TYPE	No. of TEETH	EXEC.	Dp PITCH LINE	De EXTERNAL	Df FLANGE	Dm HUB	Di	F	L	d bore Ø	FLANGE No.
STEEL	WITH FLANGE	22-8M-50	22	1F	56.02	54.65	60	43	-	60	70	-	53
		24-8M-50	24	1F	61.12	59.75	66	45	-	60	70	-	69
		26-8M-50	26	1F	66.21	64.85	70	48	-	60	70	-	61
		28-8M-50	28	1F	71.30	70.08	75	50	-	60	70	-	79
		30-8M-50	30	1F	76.39	75.13	83	55	-	60	70	-	73
		32-8M-50	32	1F	81.49	80.16	87	60	-	60	70	-	76
		34-8M-50	34	1F	86.58	85.22	91	66	-	60	70	-	66
		36-8M-50	36	1F	91.67	90.30	97	70	-	60	70	-	68
		38-8M-50	38	1F	96.77	95.39	102	75	-	60	70	-	70
		40-8M-50	40	1F	101.86	100.49	106	75	-	60	70	-	77
		44-8M-50	44	1F	112.05	110.67	120	75	-	60	70	-	75
		48-8M-50	48	1F	122.23	120.86	128	80	-	60	70	-	78
		56-8M-50	56	6F	142.60	141.23	150	90	116	60	60	18	85
		64-8M-50	64	6F	162.97	161.60	168	100	137	60	60	18	90
		72-8M-50	72	6F	183.35	181.97	132	100	158	60	60	18	97
CAST IRON	WITHOUT FLANGE	80-8M-50	80	7	203.72	202.35	-	110	180	60	60	18	-
		90-8M-50	90	7	229.18	227.81	-	110	204	60	60	18	-
		112-8M-50	112	5	285.21	283.83	-	110	254	60	60	18	-
		144-8M-50	144	5	366.69	365.32	-	110	336	60	60	20	-
		168-8M-50	168	5	427.81	426.44	-	120	400	60	60	20	-
		192-8M-50	192	5	488.92	487.55	-	130	460	60	60	20	-

HTD® PILOT BORE "PHOSPHATED" PULLEYS

HTD® 8M 85

CHARACTERISTICS		TYPE	No. of TEETH	EXEC.	Dp PITCH LINE	De EXTERNAL	Df FLANGE	Dm HUB	Di	F	L	d bore Ø	FLANGE No.
STEEL	WITH FLANGE	22-8M-85	22	1F	56.02	54.65	60	43	-	95	105	-	53
		24-8M-85	24	1F	61.12	59.75	66	45	-	95	105	-	69
		26-8M-85	26	1F	66.21	64.85	70	48	-	95	105	-	61
		28-8M-85	28	1F	71.30	70.08	75	50	-	95	105	-	79
		30-8M-85	30	1F	76.39	75.13	83	55	-	95	105	-	73
		32-8M-85	32	1F	81.49	80.16	87	60	-	95	105	-	76
		34-8M-85	34	1F	86.58	85.22	91	66	-	95	105	-	66
		36-8M-85	36	1F	91.67	90.30	97	70	-	95	105	-	68
		38-8M-85	38	1F	96.77	95.39	102	75	-	95	105	-	70
		40-8M-85	40	1F	101.86	100.49	106	75	-	95	105	-	77
		44-8M-85	44	1F	112.05	110.67	120	75	-	95	105	-	75
		48-8M-85	48	1F	122.23	120.86	128	80	-	95	105	-	78
		56-8M-85	56	1F	142.60	141.23	150	90	-	95	105	20	85
		64-8M-85	64	6F	162.97	161.60	168	100	137	95	95	20	90
		72-8M-85	72	6F	183.35	181.97	192	100	158	95	95	20	97
CAST IRON	WITHOUT FLANGE	80-8M-85	80	5	203.72	202.35		110	180	95	95	20	-
		90-8M-85	90	5	229.18	227.81		110	204	95	95	20	-
		112-8M-85	112	5	285.21	283.83		110	254	95	95	24	-
		144-8M-85	144	5	366.69	365.32		110	336	95	95	24	-
		*168-8M-85	168	5	427.81	426.44		120	400	95	95	24	-
		*192-8M-85	192	5	488.92	487.55		130	460	95	95	24	-

HTD® 14M 40

CHARACTERISTICS		TYPE	No. of TEETH	EXEC.	Dp PITCH LINE	De EXTERNAL	Df FLANGE	Dm HUB	Di	F	L	d bore Ø	FLANGE No.
STEEL	WITH FLANGE	28-14M-40	28	1F	124.78	122.12	128	100	-	54	69	24	153
		*29-14M-40	29	1F	129.23	126.57	138	100	-	54	69	24	154
		30-14M-40	30	1F	133.69	130.99	138	100	-	54	69	24	154
		32-14M-40	32	1F	142.60	139.88	154	100	-	54	69	24	160
		34-14M-40	34	1F	151.52	148.79	160	100	-	54	69	24	166
		36-14M-40	36	1F	160.43	157.68	168	100	-	54	69	24	168
		38-14M-40	38	1F	169.34	166.60	183	120	-	54	69	24	172
		40-14M-40	40	1F	178.25	175.49	188	120	-	54	69	24	162
		44-14M-40	44	1F	196.08	193.28	211	120	-	54	69	24	175
CAST IRON		48-14M-40	48	2F	213.90	211.11	226	135	170	54	69	24	180
		56-14M-40	56	2F	249.55	246.76	256	135	207	54	69	28	182
		64-14M-40	64	2F	285.21	282.41	296	135	240	54	69	28	184
	WITHOUT FLANGE	72-14M-40	72	4	320.86	318.06	-	135	278	54	69	28	-
		80-14M-40	80	4	356.51	353.71	-	135	314	54	69	28	-
		90-14M-40	90	4	401.07	398.28	-	135	358	54	69	28	-
		112-14M-40	112	4	499.11	496.32	-	135	456	54	69	28	-
		*144-14M-40	144	4	641.71	638.92	-	135	600	54	69	28	-
		*168-14M-40	168	4	748.66	745.87	-	135	706	54	69	28	-
		*192-14M-40	192	4	855.62	852.82	-	135	813	54	69	28	-
		*216-14M-40	216	4	962.57	959.76	-	150	920	54	69	28	-

* Toothing marked with an asterisk are produced on request

HTD® PILOT BORE "PHOSPHATED" PULLEYS

HTD® 14M 55

CHARACTERISTICS		TYPE	No. of TEETH	EXEC.	Dp PITCH LINE	De EXTERNAL	Df FLANGE	Dm HUB	Di	F	L	d bore Ø	FLANGE No.
STEEL	WITH FLANGE	28-14M-55	28	1F	124.78	122.12	128	100	-	70	85	24	153
		*29-14M-55	29	1F	129.23	126.57	138	100	-	70	85	24	154
		30-14M-55	30	1F	133.69	130.99	138	100	-	70	85	24	154
		32-14M-55	32	1F	142.60	139.88	154	100	-	70	85	24	160
		34-14M-55	34	1F	151.52	148.79	160	100	-	70	85	24	166
		36-14M-55	36	1F	160.43	157.68	168	100	-	70	85	24	168
		38-14M-55	38	1F	169.34	166.6	183	120	-	70	85	24	172
		40-14M-55	40	1F	178.25	175.49	188	120	-	70	85	24	162
		44-14M-55	44	1F	196.08	193.28	211	120	-	70	85	24	175
CAST IRON		48-14M-55	48	6F	213.90	211.11	226	135	170	70	70	24	180
		56-14M-55	56	6F	249.55	246.76	256	135	207	70	70	28	182
		64-14M-55	64	6F	285.21	282.41	296	135	240	70	70	28	184
	WITHOUT FLANGE	72-14M-55	72	5	320.86	318.06	-	135	278	70	70	28	-
		80-14M-55	80	5	356.51	353.71	-	135	314	70	70	28	-
		90-14M-55	90	5	401.07	398.28	-	135	358	70	70	28	-
		112-14M-55	112	5	499.11	496.32	-	135	456	70	70	28	-
		144-14M-55	144	5	641.71	638.92	-	135	600	70	70	28	-
		168-14M-55	168	5	748.66	745.87	-	135	706	70	70	28	-
		192-14M-55	192	5	855.62	852.82	-	135	813	70	70	28	-
		*216-14M-55	216	5	962.57	959.76	-	150	920	70	70	28	-

HTD® 14M 85

CHARACTERISTICS		TYPE	No. of TEETH	EXEC.	Dp PITCH LINE	De EXTERNAL	Df FLANGE	Dm HUB	Di	F	L	d bore Ø	FLANGE No.
STEEL	WITH FLANGE	28-14M-85	28	1F	124.78	122.12	128	100	-	102	117	-	153
		*29-14M-85	29	1F	129.23	126.57	138	100	-	102	117	-	154
		30-14M-85	30	1F	133.69	130.99	138	100	-	102	117	-	154
		32-14M-85	32	1F	142.60	139.88	154	100	-	102	117	-	160
		34-14M-85	34	1F	151.52	148.79	160	100	-	102	117	-	166
		36-14M-85	36	1F	160.43	157.68	168	100	-	102	117	-	168
		38-14M-85	38	1F	169.34	166.60	183	120	-	102	117	-	172
		40-14M-85	40	1F	178.25	175.49	188	135	-	102	117	-	162
		44-14M-85	44	1F	196.08	193.28	211	135	-	102	117	-	175
		48-14M-85	48	1F	213.90	211.11	226	150	-	102	117	-	180
CAST IRON		56-14M-85	56	6F	249.55	246.76	256	150	207	102	102	32	182
		64-14M-85	64	6F	285.21	282.41	296	150	240	102	102	32	184
	WITHOUT FLANGE	72-14M-85	72	5	320.86	318.06	-	150	278	102	102	32	-
		80-14M-85	80	5	356.51	353.71	-	150	314	102	102	32	-
		90-14M-85	90	5	401.07	398.28	-	150	358	102	102	32	-
		112-14M-85	112	5	499.11	496.32	-	150	456	102	102	32	-
		144-14M-85	144	5	641.71	638.92	-	150	600	102	102	32	-
		168-14M-85	168	5	748.66	745.87	-	150	706	102	102	32	-
		192-14M-85	192	5	855.62	852.82	-	165	813	102	102	32	-
		*216-14M-85	216	5	962.57	959.76	-	165	920	102	102	32	-

* Toothing marked with an asterisk are produced on request

HTD® PILOT BORE "PHOSPHATED" PULLEYS

HTD® 14M 115

CHARACTERISTICS		TYPE	No. of TEETH	EXEC.	Dp PITCH LINE	De EXTERNAL	Df FLANGE	Dm HUB	Di	F	L	d bore Ø	FLANGE No.
STEEL	WITH FLANGE	28-14M-115	28	1F	124.78	122.12	128	100	-	133	148	-	153
		*29-14M-115	29	1F	129.23	126.57	138	100	-	133	148	-	154
		30-14M-115	30	1F	133.69	130.99	138	100	-	133	148	-	154
		32-14M-115	32	1F	142.60	139.88	154	100	-	133	148	-	160
		34-14M-115	34	1F	151.52	148.79	160	100	-	133	148	-	166
		36-14M-115	36	1F	160.43	157.68	168	120	-	133	148	-	168
		38-14M-115	38	1F	169.34	166.60	183	120	-	133	148	-	172
		40-14M-115	40	1F	178.25	175.49	188	135	-	133	148	-	162
		44-14M-115	44	1F	196.08	193.28	211	140	-	133	148	-	175
		48-14M-115	48	1F	213.90	211.11	226	150	-	133	148	-	180
		56-14M-115	56	1F	249.55	246.76	256	150	-	133	148	-	182
CAST IRON		64-14M-115	64	6F	285.21	282.41	296	150	240	133	133	32	184
	WITHOUT FLANGE	72-14M-115	72	5	320.86	318.06	-	150	278	133	133	32	-
		80-14M-115	80	5	356.51	353.71	-	150	314	133	133	32	-
		90-14M-115	90	5	401.07	398.28	-	150	358	133	133	32	-
		112-14M-115	112	5	499.11	496.32	-	150	456	133	133	32	-
		144-14M-115	144	5	641.71	638.92	-	165	600	133	133	32	-
		168-14M-115	168	5	748.66	745.87	-	165	706	133	133	32	-
		192-14M-115	192	5	855.62	852.82	-	165	813	133	133	32	-
		*216-14M-115	216	5	962.57	959.76	-	165	920	133	133	32	-

HTD® 14M 170

CHARACTERISTICS		TYPE	No. of TEETH	EXEC.	Dp PITCH LINE	De EXTERNAL	Df FLANGE	Dm HUB	Di	F	L	d bore Ø	FLANGE No.
STEEL	WITH FLANGE	28-14M-170	28	1F	124.78	122.12	128	100	-	187	202	-	153
		*29-14M-170	29	1F	129.23	126.57	138	100	-	187	202	-	154
		30-14M-170	30	1F	133.69	130.99	138	100	-	187	202	-	154
		32-14M-170	32	1F	142.60	139.88	154	100	-	187	202	-	160
		34-14M-170	34	1F	151.52	148.79	160	100	-	187	202	-	166
		36-14M-170	36	1F	160.43	157.68	168	120	-	187	202	-	168
		38-14M-170	38	1F	169.34	166.60	183	135	-	187	202	-	172
		40-14M-170	40	1F	178.25	175.49	188	140	-	187	202	-	162
		*44-14M-170	44	1F	196.08	193.28	211	160	-	187	202	-	175
		*48-14M-170	48	1F	213.90	211.11	226	160	-	187	202	-	180
		*56-14M-170	56	1F	249.55	246.76	256	160	-	187	202	-	182
		*64-14M-170	64	1F	285.21	282.41	296	180	-	187	202	-	184
CAST IRON	WITHOUT FLANGE	*72-14M-170	72	7	320.86	318.06	-	180	278	187	187	32	-
		80-14M-170	80	7	356.51	353.71	-	180	314	187	187	32	-
		90-14M-170	90	5	401.07	398.28	-	180	358	187	187	38	-
		112-14M-170	112	5	499.11	496.32	-	200	456	187	187	38	-
		144-14M-170	144	5	641.71	638.92	-	220	600	187	187	38	-
		168-14M-170	168	5	748.66	745.87	-	220	706	187	187	38	-
		*192-14M-170	192	5	855.61	852.82	-	220	813	187	187	38	-
		*216-14M-170	216	5	962.57	959.76	-	220	920	187	187	38	-

* Toothing marked with an asterisk are produced on request

HTD® "PHOSPHATED" PULLEYS TAPER-LOCK®

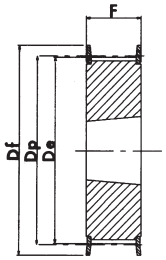

EXECUTION 1F

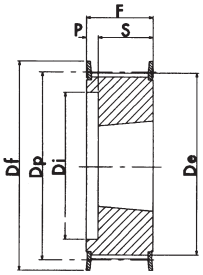

EXECUTION 2F

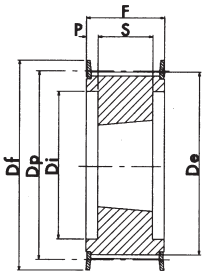

EXECUTION 3F

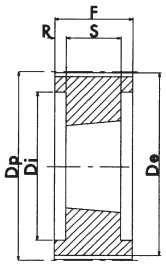

EXECUTION 4

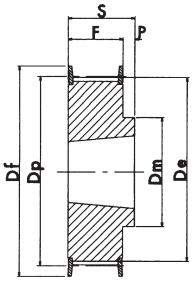

EXECUTION 5F

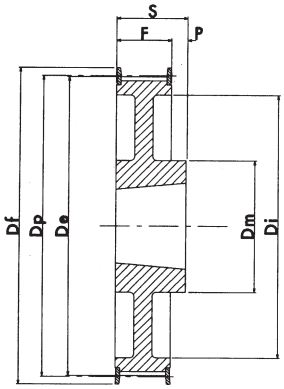

EXECUTION 6F

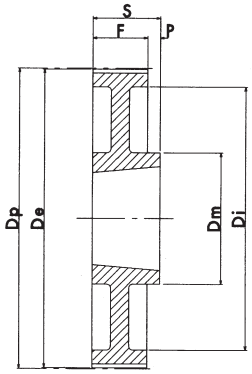

EXECUTION 7

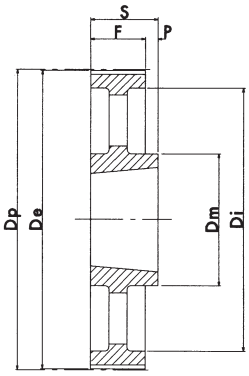

EXECUTION 8

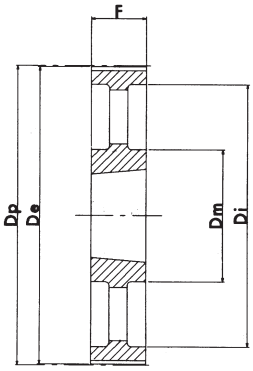

EXECUTION 9

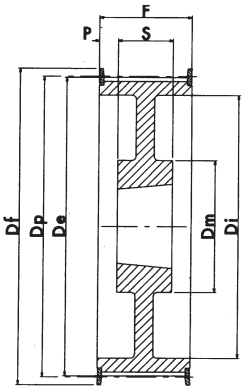

EXECUTION 10F

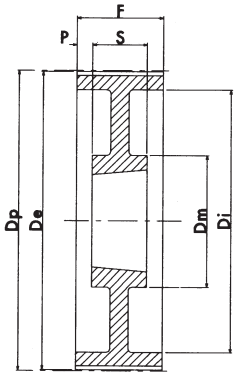

EXECUTION 11

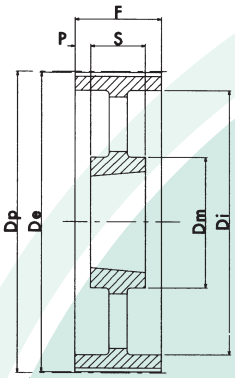

EXECUTION 12

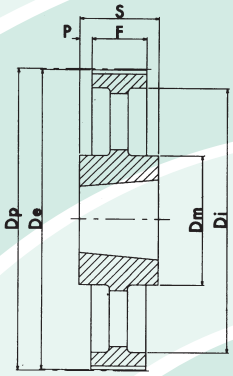

EXECUTION 13

HTD® "PHOSPHATED" PULLEYS TAPER-LOCK®

HTD® 5M 15

CHARACTERISTICS		TYPE	No. of TEETH	EXEC.	BUSH	MAX. BORE	Dp PITCH LINE	De EXTERNAL	Df FLANGE	Dm HUB	Di	F	S	P	FLANGE No.
STEEL	WITH FLANGE	TL 34-5M-15	34	1F	1008	25	54.11	52.97	57	-	-	22	22	-	20
		TL 36-5M-15	36	1F	1108	25	57.30	56.15	60	-	-	22	22	-	21
		TL 38-5M-15	38	1F	1108	25	60.48	59.34	66.5	-	-	22	22	-	24
		TL 40-5M-15	40	1F	1108	25	63.66	62.52	71	-	-	22	22	-	25
		TL 44-5M-15	44	1F	1108	25	70.03	68.89	75	-	-	22	22	-	27
		TL 48-5M-15	48	5F	1210	32	76.39	75.25	83	59	-	22	25	3	29
		TL 56-5M-15	56	5F	1210	32	89.13	87.39	93	70	-	22	25	3	33
		TL 64-5M-15	64	5F	1210	32	101.86	100.72	106	80	-	22	25	3	38
	WITHOUT FLANGE	TL 72-5M-15	72	5	1610	42	114.59	113.45	-	92	-	22	25	3	-
		TL 80-5M-15	80	5	1610	42	127.32	126.18	-	92	-	22	25	3	-
		TL 90-5M-15	90	5	1610	42	143.24	142.10	-	92	-	22	25	3	-
		TL112-5M-15	112	5	2012	50	178.25	177.11	-	110	-	20	32	12	-
		TL136-5M-15	136	13	2012	50	216.45	215.31	-	110	199	20	32	6	-

HTD® 8M 20

CHARACTERISTICS		TYPE	No. of TEETH	EXEC.	BUSH	MAX. BORE	Dp PITCH LINE	De EXTERNAL	Df FLANGE	Dm HUB	Di	F	S	P	FLANGE No.
STEEL	WITH FLANGE	TL22-8M-20	22	2F	1008	25	56.02	54.65	60	-	37	28	22	6	53
		TL24-8M-20	24	2F	1108	25	61.12	59.75	66	-	44	28	22	6	69
		TL26-8M-20	26	2F	1108	25	66.21	64.85	70	-	45	28	22	6	61
		TL28-8M-20	28	2F	1108	25	71.30	70.08	75	-	50	28	22	6	79
		TL30-8M-20	30	2F	1108	25	76.39	75.13	83	-	58	28	22	6	73
		TL32-8M-20	32	2F	1610	42	81.49	80.16	87	-	63	28	25	3	76
		TL34-8M-20	34	2F	1610	42	86.58	85.22	91	-	64	28	25	3	66
		TL36-8M-20	36	2F	1610	42	91.67	90.30	97	-	68	28	25	3	68
		TL38-8M-20	38	2F	1610	42	96.77	95.39	102	-	72	28	25	3	70
		TL40-8M-20	40	2F	1610	42	101.86	100.49	106	-	76	28	25	3	77
		TL44-8M-20	44	5F	2012	50	112.05	110.67	120	92	-	28	32	4	75
		TL48-8M-20	48	5F	2012	50	122.23	120.86	128	96	-	28	32	4	78
		TL56-8M-20	56	5F	2012	50	142.60	141.23	150	110	-	28	32	4	85
		TL64-8M-20	64	6F	2012	50	162.97	161.60	168	110	137	28	32	4	90
		TL72-8M-20	72	6F	2012	50	183.35	181.97	192	110	158	28	32	4	97
CAST IRON	WITHOUT FLANGE	TL80-8M-20	80	7	2012	50	203.72	202.35	-	110	180	28	32	4	-
		TL90-8M-20	90	7	2012	50	229.18	227.81	-	110	204	28	32	4	-
		TL112-8M-20	112	7	2517	60	285.21	283.83	-	125	254	28	45	17	-
		TL144-8M-20	144	13	2517	60	366.69	365.32	-	125	336	28	45	12	-

HTD® "PHOSPHATED" PULLEYS TAPER-LOCK®

HTD® 8M 30

CHARACTERISTICS		TYPE	No. of TEETH	EXEC.	BUSH	MAX. BORE	Dp PITCH LINE	De EXTERNAL	Df FLANGE	Dm HUB	Di	F	S	P	FLANGE No.
STEEL	WITH FLANGE	TL 22-8M-30	22	2F	1008	25	56.02	54.65	60	-	37	38	22	16	53
		TL 24-8M-30	24	2F	1108	25	61.12	59.75	66	-	44	38	22	16	69
		TL 26-8M-30	26	2F	1108	25	66.21	64.85	70	-	44	38	22	16	61
		TL 28-8M-30	28	2F	1210	32	71.30	70.08	75	-	50	38	25	13	79
		TL 30-8M-30	30	1F	1615	42	76.39	75.13	83	-	-	38	38	-	73
		TL 32-8M-30	32	1F	1615	42	81.49	80.16	87	-	-	38	38	-	76
		TL 34-8M-30	34	1F	1615	42	86.58	85.22	91	-	-	38	38	-	66
		TL 36-8M-30	36	1F	1615	42	91.67	90.30	97	-	-	38	38	-	68
		TL 38-8M-30	38	1F	1615	42	96.77	95.39	102	-	-	38	38	-	70
		TL 40-8M-30	40	1F	1615	42	101.86	100.49	106	-	-	38	38	-	77
		TL 44-8M-30	44	2F	2012	50	112.05	110.67	120	-	86	38	32	6	75
		TL 48-8M-30	48	2F	2012	50	122.23	120.86	128	-	90	38	32	6	78
		TL 56-8M-30	56	2F	2012	50	142.60	141.23	150	-	110	38	32	6	85
		TL 64-8M-30	64	5F	2517	60	162.97	161.60	168	125	-	38	45	7	90
		TL 72-8M-30	72	6F	2517	60	183.35	181.97	192	125	158	38	45	7	97
CAST IRON	WITHOUT FLANGE	TL 80-8M-30	80	7	2517	60	203.72	202.35	-	125	180	38	45	7	-
		TL 90-8M-30	90	7	2517	60	229.18	227.81	-	125	204	38	45	7	-
		TL 112-8M-30	112	7	2517	60	285.21	283.83	-	125	254	38	45	7	-
		TL 144-8M-30	144	8	2517	60	366.69	365.32	-	125	336	38	45	7	-

HTD® 8M 50

CHARACTERISTICS		TYPE	No. of TEETH	EXEC.	BUSH	MAX. BORE	Dp PITCH LINE	De EXTERNAL	Df FLANGE	Dm HUB	Di	F	S	P	FLANGE No.
STEEL	WITH FLANGE	TL 28-8M-50	28	2F	1210	32	71.30	70.08	75	-	50	60	25	35	79
		TL 30-8M-50	30	2F	1615	42	76.39	75.13	83	-	58	60	38	22	73
		TL 32-8M-50	32	2F	1615	42	81.49	80.16	87	-	63	60	38	22	76
		TL 34-8M-50	34	2F	1615	42	86.58	85.22	91	-	65	60	38	22	66
		TL 36-8M-50	36	2F	1615	42	91.67	90.30	97	-	68	60	38	22	68
		TL 38-8M-50	38	2F	1615	42	96.77	95.39	102	-	72	60	38	22	70
		TL 40-8M-50	40	3F	2012	50	101.86	100.49	106	-	80	60	32	14	77
		TL 44-8M-50	44	3F	2012	50	112.05	110.67	120	-	86	60	32	14	75
		TL 48-8M-50	48	3F	2012	50	122.23	120.86	128	-	95	60	32	14	78
		TL 56-8M-50	56	3F	2517	60	142.60	141.23	150	-	116	60	45	7.5	85
		TL 64-8M-50	64	3F	2517	60	162.97	161.60	168	-	136	60	45	7.5	90
		TL 72-8M-50	72	10F	2517	60	183.35	181.97	192	125	158	60	45	7.5	97
CAST IRON	WITHOUT FLANGE	TL 80-8M-50	80	4	3020	75	203.72	202.3	-	-	180	60	51	4.5	-
		TL 90-8M-50	90	11	3020	75	229.18	227.81	-	160	204	60	51	4.5	-
		TL 112-8M-50	112	11	3020	75	285.21	283.83	-	170	254	60	51	4.5	-
		TL 144-8M-50	144	12	3020	75	366.69	365.32	-	170	336	60	51	4.5	-
		TL 168-8M-50	168	13	3525	90	427.81	426.44	-	198	395	60	65	2.5	-
		TL 192-8M-50	192	13	3525	90	488.92	487.55	-	198	455	60	65	2.5	-

HTD® "PHOSPHATED" PULLEYS TAPER-LOCK®

HTD® 8M 85

CHARACTERISTICS		TYPE	No. of TEETH	EXEC.	BUSH	MAX. BORE	Dp PITCH LINE	De EXTERNAL	Df FLANGE	Dm HUB	Di	F	S	P	FLANGE No.
STEEL	WITH FLANGE	TL 34-8M-85	34	3F	1615	42	86.58	85.22	91	-	65	95	38	28.5	66
		TL 36-8M-85	36	3F	1615	42	91.67	90.30	97	-	68	95	38	28.5	68
		TL 38-8M-85	38	3F	1615	42	96.77	95.39	102	-	72	95	38	28.5	70
		TL 40-8M-85	40	3F	2012	50	101.86	100.49	106	-	80	95	32	31.5	77
		TL 44-8M-85	44	3F	2012	50	112.05	110.67	120	-	86	95	32	31.5	75
		TL 48-8M-85	48	3F	2517	60	122.23	120.86	128	-	97	95	45	25	78
		TL 56-8M-85	56	3F	2517	60	142.60	141.23	150	-	116	95	45	25	85
		TL 64-8M-85	64	3F	2517	60	162.97	161.60	168	-	136	95	45	25	90
		TL 72-8M-85	72	3F	3020	75	183.35	181.97	192	-	150	95	51	22	97
CAST IRON	WITHOUT FLANGE	TL 80-8M-85	80	4	3020	75	203.72	202.35	-	-	180	95	51	22	-
		TL 90-8M-85	90	4	3020	75	229.18	227.81	-	-	204	95	51	22	-
		TL112-8M-85	112	11	3020	75	285.21	283.83	-	170	254	95	51	22	-
		TL144-8M-85	144	11	3525	90	366.69	365.32	-	198	336	95	65	15	-
		TL168-8M-85	168	12	3525	90	427.81	426.44	-	198	395	95	65	15	-
		TL192-8M-85	192	12	3525	90	488.92	487.55	-	198	455	95	65	15	-

HTD® 14M 40

CHARACTERISTICS		TYPE	No. of TEETH	EXEC.	BUSH	MAX. BORE	Dp PITCH LINE	De EXTERNAL	Df FLANGE	Dm HUB	Di	F	S	P	FLANGE No.
STEEL	WITH FLANGE	TL 28-14M-40	28	3F	2012	50	124.78	122.12	128	-	94	54	32	11	153
		*TL 29-14M-40	29	3F	2012	50	129.23	126.57	138	-	98	54	32	11	154
		TL 30-14M-40	30	3F	2012	50	133.69	130.99	138	-	98	54	32	11	154
		TL 32-14M-40	32	3F	2012	50	142.60	139.88	154	-	108	54	32	11	160
		TL 34-14M-40	34	3F	2517	60	151.52	148.79	160	-	110	54	45	4.5	166
		TL 36-14M-40	36	3F	2517	60	160.43	157.68	168	-	120	54	45	4.5	168
		TL 38-14M-40	38	3F	2517	60	169.34	166.60	183	-	130	54	45	4.5	172
		TL 40-14M-40	40	3F	2517	60	178.25	175.49	188	-	138	54	45	4.5	162
		TL 44-14M-40	44	3F	3020	75	196.08	193.28	211	-	155	54	51	1.5	175
		TL 48-14M-40	48	3F	3020	75	213.90	211.11	226	-	170	54	51	1.5	180
		TL 56-14M-40	56	3F	3020	75	249.55	246.76	256		208	54	51	1.5	182
		*TL 64-14M-40	64	10F	3020	75	285.21	282.41	296	170	240	54	51	1.5	184
CAST IRON	WITHOUT FLANGE	TL 72-14M-40	72	11	3020	75	320.86	318.06	-	170	280	54	51	1.5	-
		TL 80-14M-40	80	12	3020	75	356.51	353.71	-	170	315	54	51	1.5	-
		TL 90-14M-40	90	12	3020	75	401.07	398.28	-	170	360	54	51	1.5	-
		TL 112-14M-40	112	12	3020	75	499.11	496.32	-	170	457	54	51	1.5	-
		TL 144-14M-40	144	12	3020	75	641.71	638.92	-	170	600	54	51	1.5	-
		TL 168-14M-40	168	12	3020	75	748.66	745.87	-	170	706	54	51	1.5	-
		TL 192-14M-40	192	12	3020	75	855.62	852.82	-	170	813	54	51	1.5	-
		TL 216-14M-40	216	12	3020	75	962.57	959.76	-	170	920	54	51	1.5	-
		TL 264-14M-40	264	13	4040	100	1176.47	1173.66	-	230	1133	54	102	24	-

* Toothing marked with an asterisk are produced on request

HTD® "PHOSPHATED" PULLEYS TAPER-LOCK®

HTD® 14M 55

CHARACTERISTICS		TYPE	No. of TEETH	EXEC.	BUSH	MAX. BORE	Dp PITCH LINE	De EXTERNAL	Df FLANGE	Dm HUB	Di	F	S	P	FLANGE No.
STEEL	WITH FLANGE	TL 28-14M-55	28	3F	2012	50	124.78	122.12	128	-	94	70	32	19	153
		*TL 29-14M-55	29	3F	2012	50	129.23	126.57	138	-	100	70	32	19	154
		TL 30-14M-55	30	3F	2517	60	133.69	130.99	138	-	100	70	45	12.5	154
		TL 32-14M-55	32	3F	2517	60	142.60	139.88	154	-	108	70	45	12.5	160
		TL 34-14M-55	34	3F	2517	60	151.52	148.79	160	-	110	70	45	12.5	166
		TL 36-14M-55	36	3F	2517	60	160.43	157.68	168	-	120	70	45	12.5	168
		TL 38-14M-55	38	3F	2517	60	169.34	166.60	183	-	130	70	45	12.5	172
		TL 40-14M-55	40	3F	2517	60	178.25	175.49	188	-	138	70	45	12.5	162
		TL 44-14M-55	44	3F	3020	75	196.08	193.28	211	-	155	70	51	9.5	175
		TL 48-14M-55	48	3F	3020	75	213.90	211.11	226	-	170	70	51	9.5	180
		TL 56-14M-55	56	3F	3020	75	249.55	246.76	256	-	208	70	51	9.5	182
CAST IRON		TL 64-14M-55	64	10F	3020	75	285.21	282.41	296	170	240	70	51	9.5	184
	WITHOUT FLANGE	TL 72-14M-55	72	11	3020	75	320.86	318.06	-	170	280	70	51	9.5	-
		TL 80-14M-55	80	12	3020	75	356.51	353.71	-	170	315	70	51	9.5	-
		TL 90-14M-55	90	12	3020	75	401.07	398.28	-	170	360	70	51	9.5	-
		TL 112-14M-55	112	12	3020	75	499.11	496.32	-	170	457	70	51	9.5	-
		TL 144-14M-55	144	12	3020	75	641.71	638.92	-	170	600	70	51	9.5	-
		TL 168-14M-55	168	12	3020	75	748.66	745.87	-	170	706	70	51	9.5	-
		TL 192-14M-55	192	12	3020	75	855.62	852.82	-	170	813	70	51	9.5	-
		TL 216-14M-55	216	13	3535	90	962.57	959.76	-	190	920	70	89	9.5	-
		TL 26414M-55	264	13	4040	100	1176.47	1173.66	-	230	1133	70	102	16	-

HTD® 14M 85

CHARACTERISTICS		TYPE	No. of TEETH	EXEC.	BUSH	MAX. BORE	Dp PITCH LINE	De EXTERNAL	Df FLANGE	Dm HUB	Di	F	S	P	FLANGE No.
STEEL	WITH FLANGE	TL28-14M-85	28	3F	2517	60	124.78	122.12	128	-	98	102	45	28.5	153
		*TL29-14M-85	29	3F	2517	60	129.23	126.57	138	-	100	102	45	28.5	154
		TL30-14M-85	30	3F	2517	60	133.69	130.99	138	-	100	102	45	28.5	154
		TL32-14M-85	32	3F	2517	60	142.60	139.88	154	-	108	102	45	28.5	160
		TL34-14M-85	34	3F	2517	60	151.52	148.79	160	-	110	102	45	28.5	166
		TL36-14M-85	36	3F	3020	75	160.43	157.68	168	-	125	102	51	25.5	168
		TL38-14M-85	38	3F	3020	75	169.34	166.60	183	-	130	102	51	25.5	172
		TL40-14M-85	40	3F	3020	75	178.25	175.49	188	-	138	102	51	25.5	162
		TL44-14M-85	44	3F	3020	75	196.08	193.28	211	-	153	102	51	25.5	175
		TL48-14M-85	48	3F	3020	75	213.90	211.11	226	-	171	102	51	25.5	180
		TL56-14M-85	56	3F	3525	90	249.55	246.76	256	-	210	102	65	18.5	182
CAST IRON		TL64-14M-85	64	10F	3525	90	285.21	282.41	296	190	240	102	65	18.5	184
	WITHOUT FLANGE	TL72-14M-85	72	11	3525	90	320.86	318.06	-	190	280	102	65	18.5	-
		TL80-14M-85	80	12	3525	90	356.51	353.71	-	190	315	102	65	18.5	-
		TL90-14M-85	90	12	3525	90	401.07	398.28	-	190	360	102	65	18.5	-
		TL112-14M-85	112	12	3525	90	499.11	496.32	-	190	457	102	65	18.5	-
		TL144-14M-85	144	12	3525	90	641.71	638.92	-	190	600	102	65	18.5	-
		TL168-14M-85	168	12	3525	90	748.66	745.87	-	190	706	102	65	18.5	-
		TL192-14M-85	192	9	4040	100	855.62	852.82	-	230	813	102	102	-	-
		TL216-14M-85	216	9	4040	100	962.57	959.76	-	230	920	102	102	-	-
		TL264-14M-85	264	9	4040	100	1176.47	1173.66	-	230	1133	102	102	-	-

* Toothing marked with an asterisk are produced on request

HTD® "PHOSPHATED" PULLEYS TAPER-LOCK®

HTD® 14M 115

CHARACTERISTICS		TYPE	No. of TEETH	EXEC.	BUSH	MAX. BORE	Dp PITCH LINE	De EXTERNAL	Df FLANGE	Dm HUB	Di	F	S	P	FLANGE No.
STEEL	WITH FLANGE	TL28-14M-115	28	3F	2517	60	124.78	122.12	128	-	98	133	45	44	153
		*TL29-14M-115	29	3F	2517	60	129.23	126.57	138	-	100	133	45	44	154
		TL30-14M-115	30	3F	2517	60	133.69	130.99	138	-	100	133	45	44	154
		TL32-14M-115	32	3F	2517	60	142.60	139.88	154	-	108	133	45	44	160
		TL34-14M-115	34	3F	2517	60	151.52	148.79	160	-	110	133	45	44	166
		TL36-14M-115	36	3F	3020	75	160.43	157.68	168	-	125	133	51	41	168
		TL38-14M-115	38	3F	3020	75	169.34	166.60	183	-	130	133	51	41	172
		TL40-14M-115	40	3F	3020	75	178.25	175.49	188	-	138	133	51	41	162
		TL44-14M-115	44	3F	3030	75	196.08	193.28	211	-	155	133	76	28.5	175
		TL48-14M-115	48	3F	3030	75	213.90	211.11	226	-	170	133	76	28.5	180
		TL56-14M-115	56	3F	3535	90	249.55	246.76	256	-	210	133	89	22	182
CAST IRON		TL64-14M-115	64	10F	3535	90	285.21	282.41	296	190	240	133	89	22	184
	WITHOUT FLANGE	TL72-14M-115	72	11	3535	90	320.86	318.06	-	190	280	133	89	22	-
		TL80-14M-115	80	12	3535	90	356.51	353.71	-	190	315	133	89	22	-
		TL90-14M-115	90	12	3535	90	401.07	398.28	-	190	360	133	89	22	-
		TL 112-14M-115	112	12	3535	90	499.11	496.32	-	190	457	133	89	22	-
		TL 144-14M-115	144	12	4040	100	641.71	638.92	-	230	600	133	102	15.5	-
		TL 168-14M-115	168	12	4040	100	748.66	745.87	-	230	706	133	102	15.5	-
		TL 192-14M-115	192	12	4040	100	855.62	852.82	-	230	813	133	102	15.5	-
		*TL 216-14M-115	216	12	4040	100	962.57	959.76	-	230	920	133	102	15.5	-

HTD® 14M 170

CHARACTERISTICS		TYPE	No. of TEETH	EXEC.	BUSH	MAX. BORE	Dp PITCH LINE	De EXTERNAL	Df FLANGE	Dm HUB	Di	F	S	P	FLANGE No.
STEEL	WITH FLANGE	TL38-14M-170	38	3F	3030	75	169.34	166.60	183	-	130	187	76	55.5	172
		TL40-14M-170	40	3F	3030	75	178.25	175.49	188	-	138	187	76	55.5	162
		TL44-14M-170	44	3F	3535	90	196.08	193.28	211	-	155	187	89	49	175
		TL48-14M-170	48	3F	3535	90	213.90	211.11	226	-	175	187	89	49	180
		*TL56-14M-170	56	3F	3535	90	249.55	246.76	256	-	210	187	89	49	182
CAST IRON		*TL64-14M-170	64	3F	4040	100	285.21	282.41	296	-	240	187	102	42.5	184
	WITHOUT FLANGE	*TL72-14M-170	72	11	4040	100	320.86	318.06	-	230	280	187	102	42.5	-
		TL80-14M-170	80	11	4040	100	356.51	353.71	-	230	315	187	102	42.5	-
		TL90-14M-170	90	12	4040	100	401.07	398.28	-	230	360	187	102	42.5	-
		TL112-14M-170	112	12	5050	125	499.11	496.32	-	265	457	187	127	30	-
		TL144-14M-170	144	12	5050	125	641.71	638.92	-	265	600	187	127	30	-
		TL168-14M-170	168	12	5050	125	748.66	745.87	-	265	706	187	127	30	-
		*TL192-14M-170	192	12	5050	125	855.62	852.82	-	265	813	187	127	30	-
		*TL216-14M-170	216	12	5050	125	962.57	959.76	-	265	920	187	127	30	-

* Toothing marked with an asterisk are produced on request

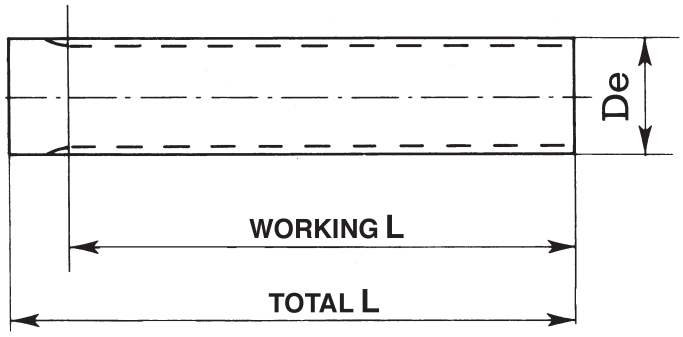

HTD 5M (5 mm pitch)

DESCRIPTION	No. of TEETH	Dp PITCH LINE	De EXTERNAL	L WORKING	L TOTAL
5M-12	12	19.10	17.96	150	160
5M-13	13	20.69	19.55	150	160
5M-14	14	22.28	21.14	175	200
5M-15	15	23.87	22.73	175	200
5M-16	16	25.47	24.33	175	200
5M-17	17	27.06	25.92	175	200
5M-18	18	28.65	27.51	-	200
5M-19	19	30.24	29.10	-	200
5M-20	20	31.83	30.69	-	200
5M-21	21	33.42	32.28	-	200
5M-22	22	35.02	33.88	-	200
5M-23	23	36.61	35.47	-	200
5M-24	24	38.20	37.06	-	200
5M-25	25	39.79	38.65	-	200
5M-26	26	41.38	40.24	-	200
5M-27	27	42.97	41.83	-	200
5M-28	28	44.56	43.42	-	200
5M-30	30	47.75	46.61	-	200
5M-32	32	50.93	49.79	-	200
5M-34	34	54.11	52.97	-	200
5M-36	36	57.30	56.16	-	200
5M-38	38	60.48	59.34	-	200
5M-40	40	63.66	62.52	-	200
5M-42	42	66.85	65.71	-	200
5M-44	44	70.03	68.89	-	200
5M-45	45	71.62	70.48	-	200
5M-48	48	76.40	75.26	-	200
5M-50	50	79.58	78.44	-	200
5M-60	60	95.50	94.36	-	200
5M-72	72	114.59	113.45	-	200

Material: Aluminium suitable for hard anodysing

HTD 8M (8 mm pitch)

DESCRIPTION	No. of TEETH	Dp PITCH LINE	De EXTERNAL	L TOTAL
8M-18	18	45.84	44.47	200
8M-19	19	48.38	47.01	200
8M-20	20	50.93	49.56	200
8M-21	21	53.48	52.11	200
8M-22	22	56.02	54.65	200
8M-23	23	58.57	57.20	200
8M-24	24	61.12	59.75	200
8M-25	25	63.66	62.29	200
8M-26	26	66.21	64.84	200
8M-28	28	71.30	69.93	200
8M-30	30	76.40	75.03	200
8M-32	32	81.49	80.12	200
8M-34	34	86.58	85.21	200
8M-35	35	89.13	87.76	200
8M-36	36	91.68	90.31	200
8M-38	38	96.77	95.40	200
8M-40	40	101.86	100.49	200
8M-44	44	112.05	110.67	200
8M-48	48	122.23	120.86	200

Material: Steel C 40 UNI 7845

PILOT BORE "PHOSPHATED" POWERGRIP® GT® PULLEYS

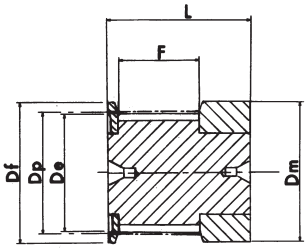

EXECUTION 0F

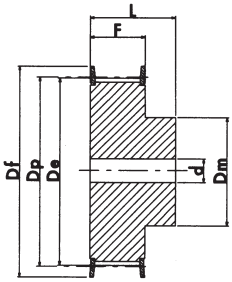

EXECUTION 1F

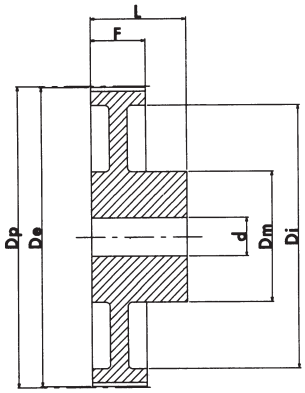

EXECUTION 3

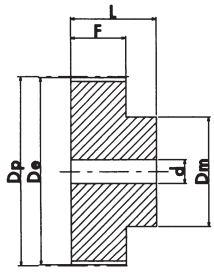

EXECUTION 8

GT® 3MR 09

CHARACTERISTICS		TYPE	No. of TEETH	EXEC.	Dp PITCH LINE	De EXTERNAL	Df FLANGE	Dm HUB	F	L	d bore Ø	FLANGE No.
STEEL	WITH FLANGE	*10-3MR-09	10	0F	9.55	8.79	13.0	13.0	10.2	17.5	-	501
		12-3MR-09	12	0F	11.46	10.70	15.0	15.0	10.2	17.5	-	502
		*14-3MR-09	14	0F	13.37	12.61	16.0	16.0	10.2	17.5	-	503
		15-3MR-09	15	0F	14.32	13.56	17.5	17.5	10.2	17.5	-	516
		*16-3MR-09	16	1F	15.28	14.52	17.5	10.0	12.8	20.6	4	504
		18-3MR-09	18	1F	17.19	16.43	20.0	11.0	12.8	20.6	6	505
		20-3MR-09	20	1F	19.10	18.34	23.0	13.0	12.8	20.6	6	517
		*21-3MR-09	21	1F	20.05	19.29	25.0	14.0	12.8	20.6	6	518
		22-3MR-09	22	1F	21.01	20.25	25.0	14.0	12.8	20.6	6	518
		*24-3MR-09	24	1F	22.92	22.16	25.0	14.0	12.8	20.6	6	518
		26-3MR-09	26	1F	24.83	24.07	28.0	16.0	12.8	20.6	6	508
		28-3MR-09	28	1F	26.74	25.98	32.0	18.0	12.8	20.6	6	509
		30-3MR-09	30	1F	28.65	27.89	32.0	20.0	12.8	20.6	6	509
		32-3MR-09	32	1F	30.56	29.80	36.0	22.0	12.8	20.6	6	510
		36-3MR-09	36	1F	34.38	33.62	39.0	26.0	13.4	22.2	6	519
		40-3MR-09	40	1F	38.20	37.44	42.0	28.0	13.4	22.2	6	513
		44-3MR-09	44	1F	42.02	41.26	48.0	33.0	13.4	22.2	6	520
	WITHOUT FLANGE	48-3MR-09	48	8	45.84	45.08	-	33.0	13.4	22.2	8	-
		60-3MR-09	60	8	57.30	56.54	-	33.0	13.4	22.2	8	-
		72-3MR-09	72	8	68.75	67.99	-	33.0	13.4	22.2	8	-

* Toothing marked with an asterisk are produced on request

PILOT BORE "PHOSPHATED" POWERGRIP® GT® PULLEYS

GT® 3MR 15

CHARACTERISTICS		TYPE	No. of TEETH	EXEC.	Dp PITCH LINE	De EXTERNAL	Df FLANGE	Dm HUB	F	L	d bore Ø	FLANGE No.
STEEL	WITH FLANGE	*10-3MR-15	10	0F	9.55	8.79	13.0	13.0	17.0	26.0	-	501
		12-3MR-15	12	0F	11.46	10.70	15.0	15.0	17.0	26.0	-	502
		*14-3MR-15	14	0F	13.37	12.61	16.0	16.0	17.0	26.0	-	503
		15-3MR-15	15	0F	14.32	13.56	17.5	17.5	17.0	26.0	-	516
		*16-3MR-15	16	1F	15.28	14.52	17.5	10.0	19.5	26.0	4	504
		18-3MR-15	18	1F	17.19	16.43	20.0	11.0	19.5	26.0	6	505
		20-3MR-15	20	1F	19.10	18.34	23.0	13.0	19.5	26.0	6	517
		*21-3MR-15	21	1F	20.05	19.29	25.0	14.0	19.5	26.0	6	518
		22-3MR-15	22	1F	21.01	20.25	25.0	14.0	19.5	26.0	6	518
		*24-3MR-15	24	1F	22.92	22.16	25.0	14.0	19.5	26.0	6	518
		26-3MR-15	26	1F	24.83	24.07	28.0	16.0	19.5	26.0	6	508
		28-3MR-15	28	1F	26.74	25.98	32.0	18.0	19.5	26.0	6	509
		30-3MR-15	30	1F	28.65	27.89	32.0	20.0	19.5	26.0	6	509
		32-3MR-15	32	1F	30.56	29.80	36.0	22.0	19.5	26.0	6	510
		36-3MR-15	36	1F	34.38	33.62	39.0	26.0	20.0	30.0	6	519
		40-3MR-15	40	1F	38.20	37.44	42.0	28.0	20.0	30.0	6	513
		44-3MR-15	44	1F	42.02	41.26	48.0	33.0	20.0	30.0	6	520
	WITHOUT FLANGE	48-3MR-15	48	8	45.84	45.08	-	33.0	20.0	30.0	8	-
		60-3MR-15	60	8	57.30	56.54	-	33.0	20.0	30.0	8	-
		72-3MR-15	72	8	68.75	67.99	-	33.0	20.0	30.0	8	-

GT® 5MR 09

CHARACTERISTICS		TYPE	No. of TEETH	EXEC.	Dp PITCH LINE	De EXTERNAL	Df FLANGE	Dm HUB	Di	F	L	d bore Ø	FLANGE No.
STEEL	WITH FLANGE	12-5MR-09	12	1F	19.10	17.96	23.0	13.0	-	14.5	20.0	-	14
		*14-5MR-09	14	1F	22.28	21.14	25.0	14.0	-	14.5	20.0	6	2
		15-5MR-09	15	1F	23.87	22.73	28.0	16.0	-	14.5	20.0	6	4
		16-5MR-09	16	1F	25.46	24.32	28.0	16.5	-	14.5	20.0	6	4
		18-5MR-09	18	1F	28.65	27.51	32.0	20.0	-	14.5	20.0	6	6
		20-5MR-09	20	1F	31.83	30.69	36.0	23.0	-	14.5	22.5	6	8
		*21-5MR-09	21	1F	33.42	32.28	38.0	24.0	-	14.5	22.5	6	9
		22-5MR-09	22	1F	35.01	33.87	39.0	25.5	-	14.5	22.5	6	15
		24-5MR-09	24	1F	38.20	37.06	42.0	27.0	-	14.5	22.5	6	13
		26-5MR-09	26	1F	41.38	40.24	44.0	30.0	-	14.5	22.5	6	12
		28-5MR-09	28	1F	44.56	43.42	48.0	30.5	-	14.5	22.5	6	11
		30-5MR-09	30	1F	47.75	46.60	51.0	35.0	-	14.5	22.5	6	16
		32-5MR-09	32	1F	50.93	49.79	54.0	38.0	-	14.5	22.5	8	18
		36-5MR-09	36	1F	57.30	56.16	60.0	38.0	-	14.5	22.5	8	21
		40-5MR-09	40	1F	63.66	62.52	71.0	38.0	-	14.5	22.5	8	25
	WITHOUT FLANGE	44-5MR-09	44	3	70.03	68.89	-	38.0	54	14.5	25.5	8	-
		48-5MR-09	48	3	76.39	75.25	-	45.0	61	14.5	25.5	8	-
		60-5MR-09	60	3	95.49	94.35	-	45.0	80	14.5	25.5	8	-
		72-5MR-09	72	3	114.59	113.45	-	45.0	100	14.5	25.5	8	-

* Toothing marked with an asterisk are produced on request

PILOT BORE "PHOSPHATED" POWERGRIP® GT® PULLEYS

GT® 5MR 15

CHARACTERISTICS		TYPE	No. of TEETH	EXEC.	Dp PITCH LINE	De EXTERNAL	Df FLANGE	Dm HUB	Di	F	L	d bore Ø	FLANGE No.
STEEL	WITH FLANGE	12-5MR-15	12	1F	19.10	17.96	23.0	13.0	-	20.5	26.0	-	14
		*14-5MR-15	14	1F	22.28	21.14	25.0	14.0	-	20.5	26.0	6	2
		15-5MR-15	15	1F	23.87	22.73	28.0	16.0	-	20.5	26.0	6	4
		16-5MR-15	16	1F	25.46	24.32	28.0	16.5	-	20.5	26.0	6	4
		8-5MR-15	18	1F	28.65	27.51	32.0	20.0	-	20.5	26.0	6	6
		20-5MR-15	20	1F	31.83	30.69	36.0	23.0	-	20.5	26.0	6	8
		*21-5MR-15	21	1F	33.42	32.28	38.0	24.0	-	20.5	26.0	6	9
		22-5MR-15	22	1F	35.01	33.87	39.0	25.5	-	20.5	26.0	6	15
		24-5MR-15	24	1F	38.20	37.06	42.0	27.0	-	20.5	28.0	6	13
		26-5MR-15	26	1F	41.38	40.24	44.0	30.0	-	20.5	28.0	6	12
		28-5MR-15	28	1F	44.56	43.42	48.0	30.5	-	20.5	28.0	6	11
		30-5MR-15	30	1F	47.75	46.60	51.0	35.0	-	20.5	28.0	6	16
		32-5MR-15	32	1F	50.93	49.79	54.0	38.0	-	20.5	28.0	8	18
		36-5MR-15	36	1F	57.30	56.16	60.0	38.0	-	20.5	28.0	8	21
		40-5MR-15	40	1F	63.66	62.52	71.0	38.0	-	20.5	28.0	8	25
	WITHOUT FLANGE	44-5MR-15	44	3	70.03	68.89	-	38.0	54	20.5	30.0	8	-
		48-5MR-15	48	3	76.39	75.25	-	38.0	61	20.5	30.0	8	-
		60-5MR-15	60	3	95.49	94.35	-	50.0	80	20.5	30.0	8	-
		72-5MR-15	72	3	114.59	113.45	-	50.0	100	20.5	30.0	8	-

GT® 5MR 25

CHARACTERISTICS		TYPE	No. of TEETH	EXEC.	Dp PITCH LINE	De EXTERNAL	Df FLANGE	Dm HUB	Di	F	L	d bore Ø	FLANGE No.
STEEL	WITH FLANGE	*12-5MR-25	12	1F	19.10	17.96	23.0	13.0	-	30.5	36.0	-	14
		*14-5MR-25	14	1F	22.28	21.14	25.0	14.0	-	30.5	36.0	-	2
		*15-5MR-25	15	1F	23.87	22.73	28.0	16.0	-	30.5	36.0	-	4
		*16-5MR-25	16	1F	25.46	24.32	28.0	16.5	-	30.5	36.0	-	4
		*18-5MR-25	18	1F	28.65	27.51	32.0	20.0	-	30.5	36.0	-	6
		*20-5MR-25	20	1F	31.83	30.69	36.0	23.0	-	30.5	36.0	-	8
		*21-5MR-25	21	1F	33.42	32.28	38.0	24.0	-	30.5	38.0	-	9
		*22-5MR-25	22	1F	35.01	33.87	39.0	25.5	-	30.5	38.0	-	15
		*24-5MR-25	24	1F	38.20	37.06	42.0	27.0	-	30.5	38.0	-	13
		*26-5MR-25	26	1F	41.38	40.24	44.0	30.0	-	30.5	38.0	-	12
		*28-5MR-25	28	1F	44.56	43.42	48.0	30.5	-	30.5	38.0	-	11
		*30-5MR-25	30	1F	47.75	46.60	51.0	35.0	-	30.5	38.0	-	16
		*32-5MR-25	32	1F	50.93	49.79	54.0	38.0	-	30.5	38.0	-	18
		*36-5MR-25	36	1F	57.30	56.16	60.0	38.0	-	30.5	38.0	-	21
		*40-5MR-25	40	1F	63.66	62.52	71.0	38.0	-	30.5	38.0	-	25
	WITHOUT FLANGE	*44-5MR-25	44	8	70.03	68.89	-	38.0	-	30.5	40.0	-	-
		*48-5MR-25	48	3	76.39	75.25	-	38.0	61	30.5	40.0	-	-
		*60-5MR-25	60	3	95.49	94.35	-	50.0	80	30.5	40.0	-	-
		*72-5MR-25	72	3	114.59	113.45	-	50.0	100	30.5	40.0	-	-

* Toothing marked with an asterisk are produced on request

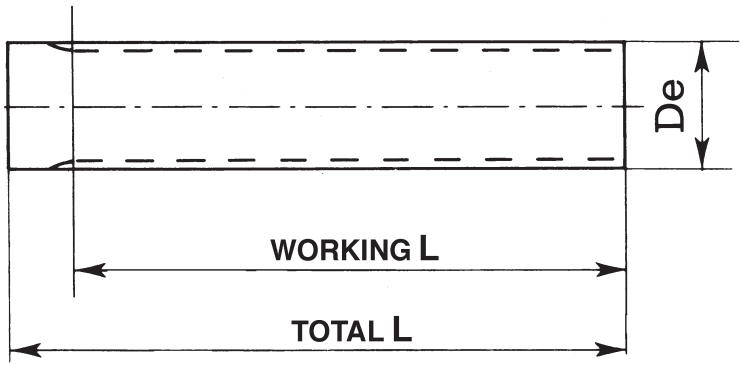

GT® 3MR

DESCRIPTION	No. of TEETH	Dp PITCH LINE	De EXTERNAL	L WORKING	L TOTAL
10-3MR	10	9.55	8.79	75	100
12-3MR	12	11.46	10.70	100	125
14-3MR	14	13.37	12.61	100	125
15-3MR	15	14.32	13.56	100	125
16-3MR	16	15.28	14.52	125	155
18-3MR	18	17.19	16.43	125	155
20-3MR	20	19.10	18.34	150	165
21-3MR	21	20.05	19.29	150	165
22-3MR	22	21.01	20.25	150	165
24-3MR	24	22.92	22.16	150	165
26-3MR	26	24.83	24.07	150	165
28-3MR	28	26.74	25.98	150	165
30-3MR	30	28.65	27.89	175	183
32-3MR	32	30.56	29.80	175	183
34-3MR	34	32.47	31.71	175	183
36-3MR	36	34.38	33.62	200	200
38-3MR	38	36.29	35.53	200	200
40-3MR	40	38.20	37.44	200	200
44-3MR	44	42.02	41.26	200	200
48-3MR	48	45.84	45.08	200	200
52-3MR	52	49.66	48.90	200	200
56-3MR	56	54.48	52.72	200	200
60-3MR	60	57.30	56.54	200	200
64-3MR	64	61.12	60.36	200	200
72-3MR	72	68.75	67.99	200	200

GT® 5MR

DESCRIPTION	No. of TEETH	Dp PITCH LINE	De EXTERNAL	L WORKING	L TOTAL
12-5MR	12	19.10	17.96	150	165
14-5MR	14	22.28	21.14	175	183
15-5MR	15	23.87	22.73	175	183
16-5MR	16	25.46	24.32	175	183
18-5MR	18	28.65	27.51	200	200
20-5MR	20	31.83	30.69	200	200
21-5MR	21	33.42	32.28	200	200
22-5MR	22	35.01	33.87	200	200
24-5MR	24	38.20	37.06	200	200
26-5MR	26	41.38	40.24	200	200
28-5MR	28	44.56	43.42	200	200
30-5MR	30	47.75	46.60	200	200
32-5MR	32	50.93	49.79	200	200
34-5MR	34	54.11	52.97	200	200
36-5MR	36	57.30	56.16	200	200
40-5MR	40	63.66	62.52	200	200
44-5MR	44	70.03	68.89	200	200
48-5MR	48	76.39	75.25	200	200
54-5MR	54	85.94	84.80	200	200
60-5MR	60	95.49	94.35	200	200
64-5MR	64	101.86	100.72	200	200
72-5MR	72	114.59	113.45	200	200

N.B. The GT® - 3MR GT® - 5MR bars are only manufactured in Aluminium suitable for hard anodising. Available till sold out.

POLY CHAIN® GT® TAPER-LOCK® "PHOSPHATED" PULLEYS

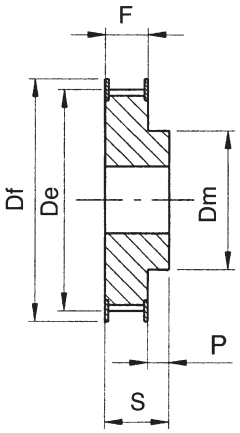

EXECUTION 1F

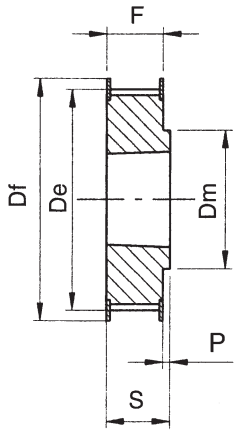

EXECUTION 2F

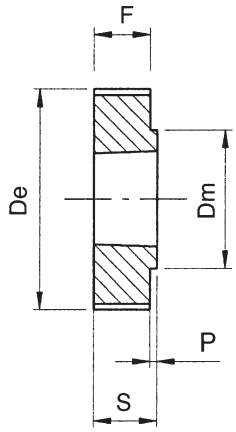

EXECUTION 3

POLY CHAIN GT 8M-12

CHARACTERISTICS		TYPE	No. of TEETH	EXEC.	BUSH	MAX. BORE	Dp PITCH LINE	De EXTERNAL	Df FLANGE	Dm HUB	Di	F	S	P	FLANGE No.	WEIGHT KG.
STEEL	WITH FLANGE	8M-22S-12	22	1F	-	28	56.02	54.42	60	43	-	20	30	-	53	0.43
		TL 8M-25S-12	25	2F	1108	28	63.66	62.06	70	49	-	20	22	-	61	0.25
		TL 8M-28S-12	28	2F	1108	28	71.30	69.70	75	56	-	20	22	-	79	0.37
		TL 8M-30S-12	30	2F	1210	32	76.39	74.79	82.5	60	-	20	25	-	82	0.41
		TL 8M-32S-12	32	2F	1610	42	81.49	79.89	87	66	-	20	25	-	76	0.37
		TL 8M-34S-12	34	2F	1610	42	86.58	84.98	91	69	-	20	25	-	66	0.45
		TL 8M-36S-12	36	2F	1610	42	91.67	90.07	97	76	-	20	25	-	68	0.59
		TL 8M-38S-12	38	2F	1610	42	96.77	95.17	102	78	-	20	25	-	70	0.70
		TL 8M-40S-12	40	2F	1610	42	101.86	100.26	106	85	-	20	25	-	77	0.82
		TL 8M-45S-12	45	2F	2012	50	114.59	112.99	120	92	-	20	32	-	75	1.10
		TL 8M-48S-12	48	2F	2012	50	122.23	120.63	128	103	-	20	32	-	78	1.42
		TL 8M-50S-12	50	2F	2012	50	127.32	125.72	135	104	-	20	32	-	80	1.60
		TL 8M-56S-12	56	2F	2012	50	142.60	141.00	150	104	-	20	32	-	85	2.10
		TL 8M-60S-12	60	2F	2012	50	152.79	151.19	158	111	-	20	32	-	86	2.40
		TL 8M-64S-12	64	2F	2012	50	162.97	161.37	168	111	-	20	32	-	90	2.70
	WITHOUT FLANGE	TL 8M-75S-12	75	3	2012	50	190.99	189.39	-	111	-	20	32	-	-	3.70
		TL 8M-80S-12	80	3	2012	50	203.72	202.12	-	111	-	20	32	-	-	4.40
		TL 8M-90S-12	90	3	2012	50	229.18	227.58	-	111	-	20	32	-	-	5.50

POLY CHAIN® GT® TAPER-LOCK® "PHOSPHATED" PULLEYS

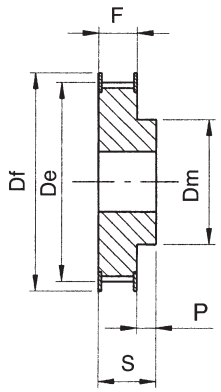

EXECUTION 1F

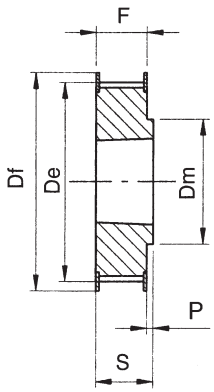

EXECUTION 2F

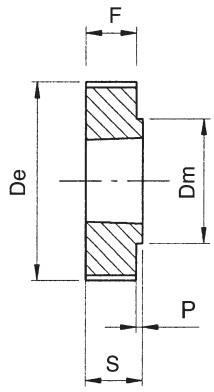

EXECUTION 3

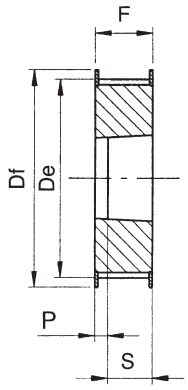

EXECUTION 4F

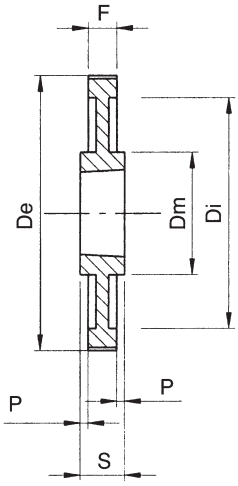

EXECUTION 11

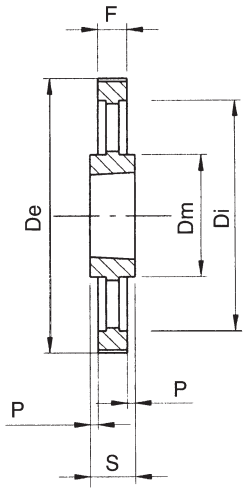

EXECUTION 13

POLY CHAIN GT 8M-21

CHARACTERISTICS		TYPE	No. of TEETH	EXEC.	BUSH	MAX. BORE	Dp PITCH LINE	De EXTERNAL	Df FLANGE	Dm HUB	Di	F	S	P	FLANGE No.	WEIGHT KG.
STEEL	WITH FLANGE	8M-22S-21	22	1F	-	28	56.02	54.42	60	43	-	30	42	-	53	0.56
		TL 8M-25S-21	25	4F	1108	28	63.66	62.06	70	-	-	30	22	-	61	0.36
		TL 8M-28S-21	28	4F	1210	32	71.30	69.70	75	-	-	30	25	-	79	0.41
		TL 8M-30S-21	30	4F	1210	32	76.39	74.79	82.5	-	-	30	25	-	82	0.56
		TL 8M-32S-21	32	4F	1610	42	81.49	79.89	87	-	-	30	25	-	76	0.52
		TL 8M-34S-21	34	4F	1610	42	86.58	84.98	91	-	-	30	25	-	66	0.61
		TL 8M-36S-21	36	4F	1610	42	91.67	90.07	97	-	-	30	25	-	68	0.70
		TL 8M-38S-21	38	4F	1610	42	96.77	95.17	102	-	-	30	25	-	70	0.92
		TL 8M-40S-21	40	4F	1610	42	101.86	100.26	106	-	-	30	25	-	77	1.06
		TL 8M-45S-21	45	2F	2012	50	114.59	112.99	120	92	-	30	32	-	75	1.30
		TL 8M-48S-21	48	2F	2012	50	122.23	120.63	128	103	-	30	32	-	78	1.60
		TL 8M-50S-21	50	2F	2012	50	127.32	125.72	135	104	-	30	32	-	80	1.83
		TL 8M-56S-21	56	2F	2012	50	142.60	141.00	150	104	-	30	32	-	85	2.40
		TL 8M-60S-21	60	2F	2517	60	152.79	151.19	158	124	-	30	45	-	86	3.20
		TL 8M-64S-21	64	2F	2517	60	162.97	161.37	168	124	-	30	45	-	90	3.80
	WITHOUT FLANGE	TL 8M-75S-21	75	3	2517	60	190.99	189.39	-	124	-	30	45	-	-	6.20
		TL 8M-80S-21	80	3	2517	60	203.72	202.12	-	124	-	30	45	-	-	6.00
		TL 8M-90S-21	90	11	2517	60	229.18	227.58	-	124	198	30	45	7.5	-	5.40
CAST IRON		TL 8M-112S-21	112	11	2517	60	285.21	283.61	-	124	253	30	45	7.5	-	7.40
		TL 8M-140S-21	140	13	3020	75	356.51	354.91	-	150	324	30	51	10.5	-	9.00

POLY CHAIN® GT® TAPER-LOCK® "PHOSPHATED" PULLEYS

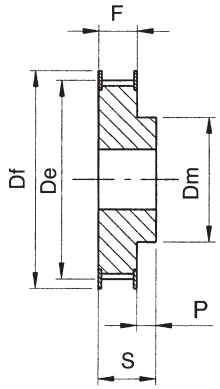

EXECUTION 1F

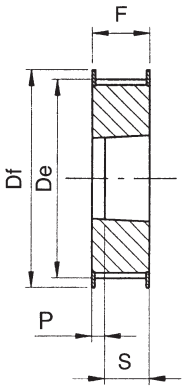

EXECUTION 4F

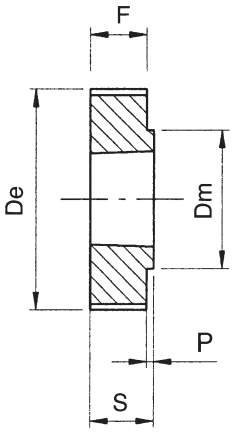

EXECUTION 3

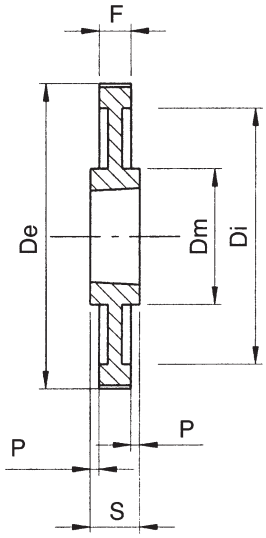

EXECUTION 11

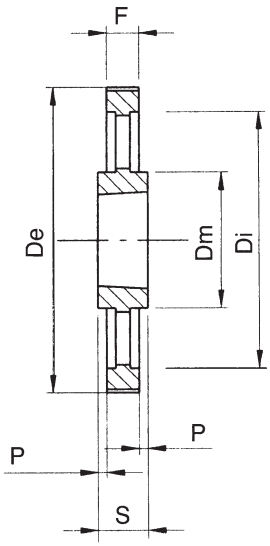

EXECUTION 13

POLY CHAIN GT 8M-36

CHARACTERISTICS		TYPE	No. of TEETH	EXEC.	BUSH	MAX. BORE	Dp PITCH LINE	De EXTERNAL	Df FLANGE	Dm HUB	Di	F	S	P	FLANGE No.	WEIGHT KG.
STEEL	WITH FLANGE	8M-25S-36	25	1F	-	32	63.66	62.06	70	49	-	45	55	-	61	1.04
		TL 8M-28S-36	28	4F	1210	32	71.30	69.70	75	-	-	45	25	20	79	0.64
		TL 8M-30S-36	30	4F	1610	42	76.39	74.79	82.5	-	-	45	25	20	82	0.59
		TL 8M-32S-36	32	4F	1610	42	81.49	79.89	87	-	-	45	25	20	76	0.79
		TL 8M-34S-36	34	4F	1610	42	86.58	84.98	91	-	-	45	25	20	66	0.93
		TL 8M-36S-36	36	4F	1610	42	91.67	90.07	97	-	-	45	25	20	68	1.15
		TL 8M-38S-36	38	4F	1610	42	96.77	95.17	102	-	-	45	25	20	70	1.39
		TL 8M-40S-36	40	4F	2012	50	101.86	100.26	106	-	-	45	32	13	77	1.34
		TL 8M-45S-36	45	4F	2012	50	114.59	112.99	120	-	-	45	32	13	75	1.87
		TL 8M-48S-36	48	4F	2012	50	122.23	120.63	128	-	-	45	32	13	78	2.20
		TL 8M-50S-36	50	4F	2012	50	127.32	125.72	135	-	-	45	32	13	80	2.70
		TL 8M-56S-36	56	4F	2517	60	142.60	141.00	150	-	-	45	45	-	85	3.00
		TL 8M-60S-36	60	4F	2517	60	152.79	151.19	158	-	-	45	45	-	86	3.80
		TL 8M-64S-36	64	4F	2517	60	162.97	161.37	168	-	-	45	45	-	90	4.50
	WITHOUT FLANGE	TL 8M-75S-36	75	3	3020	75	190.99	189.39	-	150	-	45	51	6	-	6.20
		TL 8M-80S-36	80	3	3020	75	203.72	202.12	-	150	-	45	51	6	-	7.40
		TL 8M-90S-36	90	11	3020	75	229.18	227.58	-	150	197	45	51	3	-	7.20
CAST IRON		TL 8M-112S-36	112	11	3020	75	285.21	283.61	-	150	253	45	51	3	-	10.40
		TL 8M-140S-36	140	13	3020	75	356.51	354.91	-	150	324	45	51	3	-	12.70
		TL 8M-168S-36	168	13	3525	100	427.81	426.21	-	198	396	45	65	10	-	21.50
		TL 8M-192S-36	192	13	3525	100	488.92	487.32	-	198	457	45	65	10	-	27.00

POLY CHAIN® GT® TAPER-LOCK® "PHOSPHATED" PULLEYS

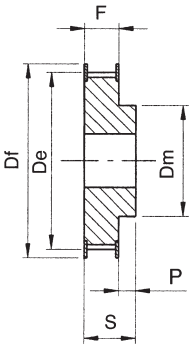

EXECUTION 1F

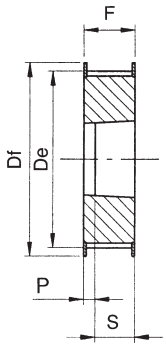

EXECUTION 4F

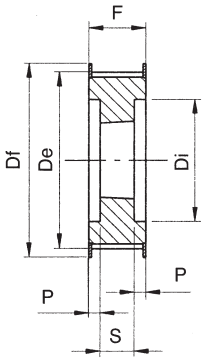

EXECUTION 7F

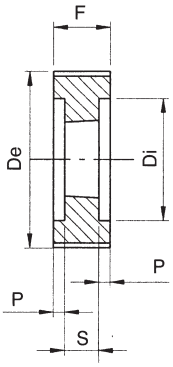

EXECUTION 6

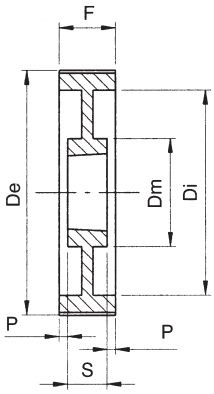

EXECUTION 8

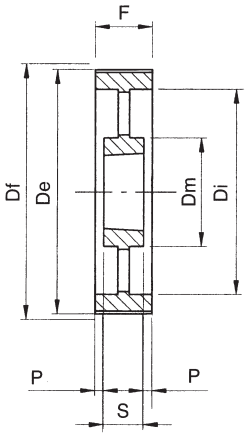

EXECUTION 10

POLY CHAIN GT 8M-62

CHARACTERISTICS		TYPE	No. of TEETH	EXEC.	BUSH	MAX. BORE	Dp PITCH LINE	De EXTERNAL	Df FLANGE	Dm HUB	Di	F	S	P	FLANGE No.	WEIGHT KG.
STEEL	WITH FLANGE	8M-30S-62	30	1F	-	42	76.39	74.79	82.5	63	-	72	84	-	82	2.40
		8M-32S-62	32	1F	-	50	81.49	79.89	87	68	-	72	84	-	76	2.80
		8M-34S-62	34	1F	-	55	86.58	84.98	91	69	-	72	84	-	66	3.00
		8M-36S-62	36	1F	-	60	91.67	90.07	97	76	-	72	84	-	68	3.40
		8M-38S-62	38	1F	-	60	96.77	95.17	102	78	-	72	84	-	70	3.80
		TL 8M-40S-62	40	4F	2012	50	101.86	100.26	106	-	-	72	32	-	77	2.06
		TL 8M-45S-62	45	4F	2012	50	114.59	112.99	120	-	-	72	32	-	75	3.00
		TL 8M-48S-62	48	4F	2517	60	122.23	120.63	128	-	-	72	45	-	78	2.90
		TL 8M-50S-62	50	4F	2517	60	127.32	125.72	135	-	-	72	45	-	80	3.25
		TL 8M-56S-62	56	7F	2517	60	142.60	141.00	150	-	111	72	45	13.5	85	3.90
		TL 8M-60S-62	60	7F	2517	60	152.79	151.19	158	-	121	72	45	13.5	86	4.70
		TL 8M-64S-62	64	7F	2517	60	162.97	161.37	168	-	131	72	45	13.5	90	5.60
	WITHOUT FLANGE	TL 8M-75S-62	75	6	3020	75	190.99	189.39	-	-	159	72	51	10.5	-	7.50
		TL 8M-80S-62	80	6	3020	75	203.72	202.12	-	-	172	72	51	10.5	-	9.20
		TL 8M-90S-62	90	6	3020	75	229.18	227.58	-	-	197	72	51	10.5	-	7.70
CAST IRON		TL 8M-112S-62	112	8	3020	75	285.21	283.61	-	198	253	72	51	10.5	-	12.10
		TL 8M-140S-62	140	8	3525	100	356.51	354.91	-	150	324	72	65	3.5	-	22.70
		TL 8M-168S-62	168	10	3525	100	427.81	426.21	-	198	396	72	65	3.5	-	26.80
		TL 8M-192S-62	192	10	3525	100	488.92	487.32	-	198	457	72	65	3.5	-	34.20

POLY CHAIN® GT® TAPER-LOCK® "PHOSPHATED" PULLEYS

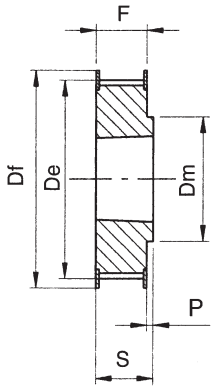

EXECUTION 2F

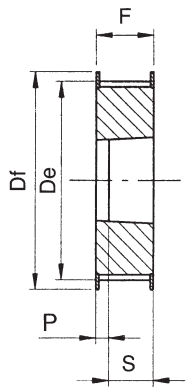

EXECUTION 4F

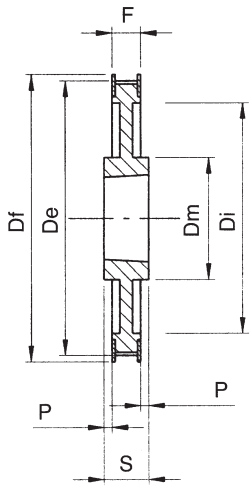

EXECUTION 12F

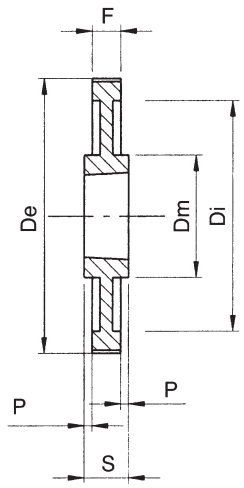

EXECUTION 11

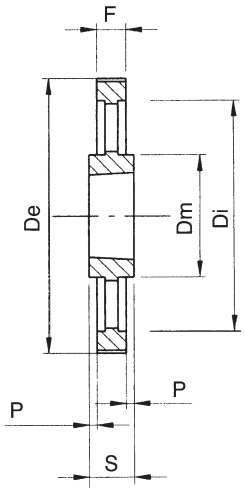

EXECUTION 13

POLY CHAIN GT 14M-20

CHARACTERISTICS		TYPE	No. of TEETH	EXEC.	BUSH	MAX. BORE	Dp PITCH LINE	De EXTERNAL	Df FLANGE	Dm HUB	Di	F	S	P	FLANGE No.	WEIGHT KG.
STEEL	WITH FLANGE	TL 14M-28S-20	28	4F	2012	50	124.78	121.98	128	-	-	33	32	1	153	1.66
		TL 14M-30S-20	30	4F	2012	50	133.69	130.89	138	-	-	33	32	1	154	2.20
		TL 14M-32S-20	32	4F	2012	50	142.60	139.80	154	-	-	33	32	1	160	3.20
		TL 14M-34S-20	34	2F	2517	60	151.52	148.72	160	117	-	33	45	-	171	3.00
		TL 14M-36S-20	36	2F	2517	60	160.43	157.63	168	117	-	33	45	-	168	3.60
		TL 14M-38S-20	38	2F	2517	60	169.34	166.54	183	117	-	33	45	-	172	4.00
		TL 14M-40S-20	40	2F	2517	60	178.25	175.45	188	117	-	33	45	-	174	4.70
		TL 14M-44S-20	44	2F	3020	75	196.08	193.28	211	144	-	33	51	-	175	5.60
		TL 14M-48S-20	48	2F	3020	75	213.90	211.11	226	144	-	33	51	-	180	6.80
		TL 14M-50S-20	50	2F	3020	75	222.82	220.02	240	144	-	33	51	-	169	7.70
		TL 14M-56S-20	56	12F	3020	75	249.55	246.76	256	144	207	33	51	9	182	7.70
	WITHOUT FLANGE	TL 14M-60S-20	60	11	3020	75	267.38	264.58	-	159	224	33	51	9	-	8.50
CAST IRON		TL 14M-64S-20	64	11	3020	75	285.21	282.41	-	159	242	33	51	9	-	10.20
		TL 14M-72S-20	72	11	3020	75	320.86	318.06	-	159	278	33	51	9	-	11.50
		TL 14M-80S-20	80	11	3020	75	356.51	353.71	-	159	314	33	51	9	-	13.50
		TL 14M-90S-20	90	13	3020	75	401.07	398.27	-	159	360	33	51	9	-	14.20
		TL 14M-112S-20	112	13	3020	75	499.11	496.31	-	159	456	33	51	9	-	18.10
		TL 14M-140S-20	140	13	3020	75	623.89	621.09	-	159	581	33	51	9	-	22.90

POLY CHAIN® GT® TAPER-LOCK® "PHOSPHATED" PULLEYS

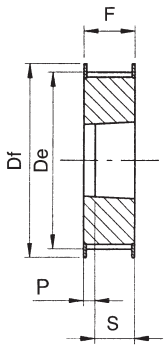

EXECUTION 4F

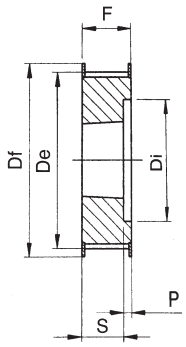

EXECUTION 5F

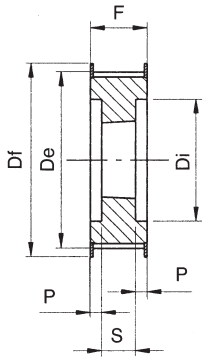

EXECUTION 7F

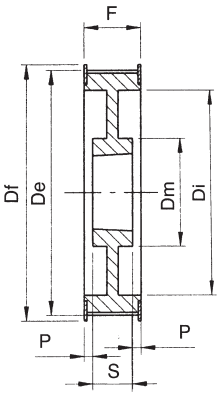

EXECUTION 9F

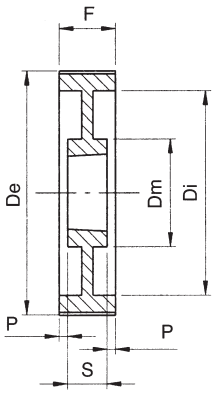

EXECUTION 8

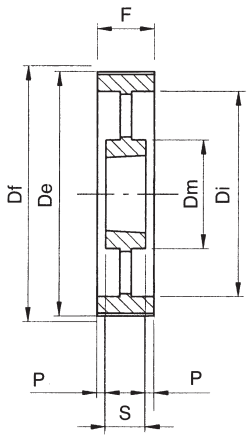

EXECUTION 10

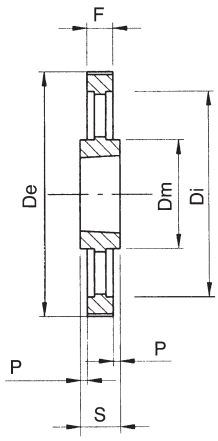

EXECUTION 13

POLY CHAIN GT 14M-37

CHARACTERISTICS		TYPE	No. of TEETH	EXEC.	BUSH	MAX. BORE	Dp PITCH LINE	De EXTERNAL	Df FLANGE	Dm HUB	Di	F	S	P	FLANGE No.	WEIGHT KG.
STEEL	WITH FLANGE	TL 14M-28S-37	28	5F	2012	50	124.78	121.98	128	-	88	51	32	19	153	2.20
		TL 14M-30S-37	30	7F	2517	60	133.69	130.89	138	-	98	51	45	3	154	2.50
		TL 14M-32S-37	32	7F	2517	60	142.60	139.80	154	-	100	51	45	3	160	3.00
		TL 14M-34S-37	34	7F	2517	60	151.52	148.72	160	-	109	51	45	3	171	3.80
		TL 14M-36S-37	36	5F	2517	60	160.43	157.63	168	-	117	51	45	6	168	4.30
		TL 14M-38S-37	38	5F	2517	60	169.34	166.54	183	-	126	51	45	6	172	5.10
		TL 14M-40S-37	40	5F	2517	60	178.25	175.45	188	-	135	51	45	6	174	6.00
		TL 14M-44S-37	44	4F	3020	75	196.08	193.28	211	-	-	51	51	-	175	7.00
		TL 14M-48S-37	48	4F	3020	75	213.90	211.11	226	-	-	51	51	-	180	9.00
		TL 14M-50S-37	50	4F	3020	75	222.82	220.02	240	-	-	51	51	-	169	10.00
		TL 14M-56S-37	56	9F	3020	75	249.55	246.76	256	144	207	51	51	-	182	9.20
CAST IRON	WITHOUT FLANGE	TL 14M-60S-37	60	8	3020	75	267.38	264.58	-	159	224	51	51	-	-	10.20
		TL 14M-64S-37	64	8	3020	75	285.21	282.41	-	159	242	51	51	-	-	12.20
		TL 14M-72S-37	72	8	3020	75	320.86	318.06	-	159	278	51	51	-	-	13.40
		TL 14M-80S-37	80	8	3020	75	356.51	353.71	-	159	314	51	51	-	-	16.10
		TL 14M-90S-37	90	10	3020	75	401.07	398.27	-	159	360	51	51	-	-	17.20
		TL 14M-112S-37	112	10	3020	75	499.11	496.31	-	159	456	51	51	-	-	23.00
		TL 14M-140S-37	140	13	3525	100	623.89	621.09	-	206	581	51	65	7	-	41.00
		TL 14M-168S-37	168	13	3525	100	748.66	745.87	-	206	706	51	65	7	-	51.50
		TL 14M-192S-37	192	13	4030	115	855.61	852.82	-	215	812	51	76	12.5	-	60.00

POLY CHAIN® GT® TAPER-LOCK® "PHOSPHATED" PULLEYS

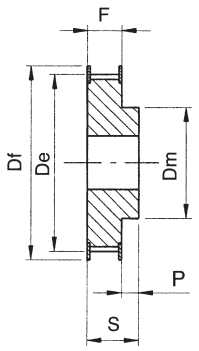

EXECUTION 1F

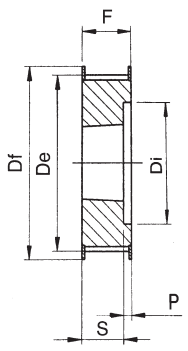

EXECUTION 5F

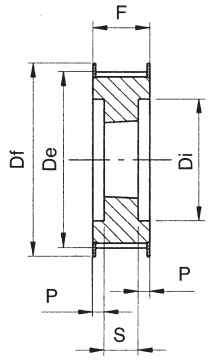

EXECUTION 7F

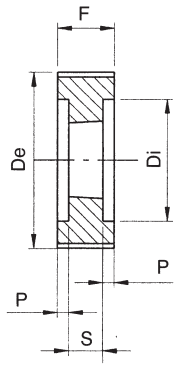

EXECUTION 6

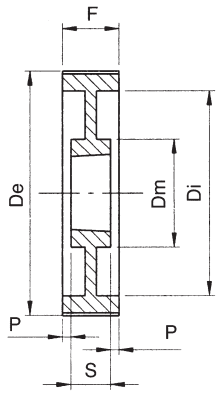

EXECUTION 8

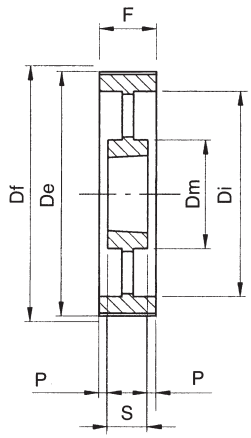

EXECUTION 10

POLY CHAIN GT 14M-68

CHARACTERISTICS		TYPE	No. of TEETH	EXEC.	BUSH	MAX. BORE	Dp PITCH LINE	De EXTERNAL	Df FLANGE	Dm HUB	Di	F	S	P	FLANGE No.	WEIGHT KG.
STEEL	WITH FLANGE	14M-34S-68	34	1F	-	100	151.52	148.72	160	132	-	84	104	-	171	10.50
		14M-36S-68	36	1F	-	100	160.43	157.63	168	131	-	84	104	-	168	11.70
		14M-38S-68	38	1F	-	115	169.34	166.54	183	141	-	84	104	-	172	13.40
		14M-40S-68	40	1F	-	125	178.25	175.45	188	156	-	84	104	-	174	15.40
		TL 14M-44S-68	44	7F	3020	75	196.08	193.28	211	-	153	84	51	16.5	175	9.20
		TL 14M-48S-68	48	5F	3020	75	213.90	211.11	226	-	171	84	51	33	180	11.30
		TL 14M-50S-68	50	7F	3525	100	222.82	220.02	240	-	180	84	65	9.5	169	15.50
		TL 14M-56S-68	56	7F	3525	100	249.55	246.76	256	-	207	84	65	9.5	182	16.80
	WITHOUT FLANGE	TL 14M-60S-68	60	6	3525	100	267.38	264.58	-	-	224	84	65	9.5	-	20.40
CAST IRON		TL 14M-64S-68	64	6	3525	100	285.21	282.41	-	-	242	84	65	9.5	-	23.60
		TL 14M-72S-68	72	8	3525	100	320.86	318.06	-	178	278	84	65	9.5	-	20.30
		TL 14M-80S-68	80	8	3525	100	356.51	353.71	-	178	314	84	65	9.5	-	21.30
		TL 14M-90S-68	90	10	3525	100	401.07	398.27	-	178	360	84	65	9.5	-	24.40
		TL 14M-112S-68	112	10	3525	100	499.11	496.31	-	178	456	84	65	9.5	-	32.70
		TL 14M-140S-68	140	10	3525	100	623.89	621.09	-	206	581	84	65	9.5	-	55.00
		TL 14M-168S-68	168	10	3525	100	748.66	745.87	-	206	706	84	65	9.5	-	71.00
		TL 14M-192S-68	192	10	4030	115	855.61	852.82	-	215	812	84	76	4	-	80.50

POLY CHAIN® GT® TAPER-LOCK® "PHOSPHATED" PULLEYS

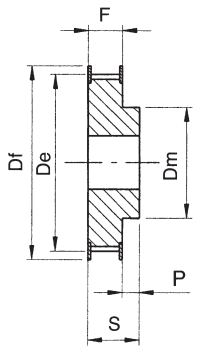

EXECUTION 1F

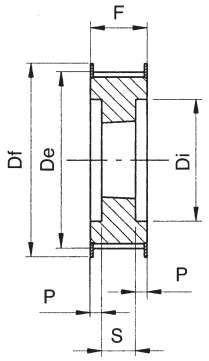

EXECUTION 7F

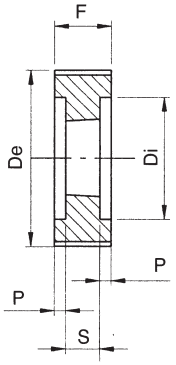

EXECUTION 6

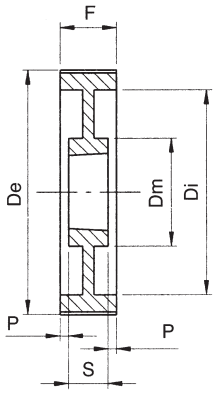

EXECUTION 8

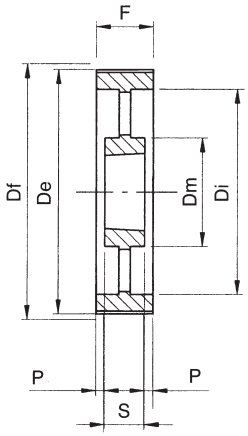

EXECUTION 10

POLY CHAIN GT 14M-90

CHARACTERISTICS		TYPE	No. of TEETH	EXEC.	BUSH	MAX. BORE	Dp PITCH LINE	De EXTERNAL	Df FLANGE	Dm HUB	Di	F	S	P	FLANGE No.	WEIGHT KG.
STEEL	WITH FLANGE	14M-36S-90	36	1F	-	110	160.43	157.63	168	131	-	106	136	-	168	14.50
		14M-38S-90	38	1F	-	115	169.34	166.54	183	141	-	106	136	-	172	17.50
		14M-40S-90	40	1F	-	125	178.25	175.45	188	156	-	106	136	-	174	19.10
		14M-44S-90	44	1F	-	140	196.08	193.28	211	169	-	106	136	-	175	23.90
		TL 14M-48S-90	48	7F	3525	100	213.90	211.11	226	-	171	106	66	20	180	12.70
		TL 14M-50S-90	50	7F	3525	100	222.82	220.02	240	-	180	106	66	20	169	14.50
		TL 14M-56S-90	56	7F	3525	100	249.55	246.76	256	-	207	106	66	20	182	19.00
	WITHOUT FLANGE	TL 14M-60S-90	60	6	3525	100	267.38	264.58	-	-	224	106	66	20	-	22.50
CAST IRON		TL 14M-64S-90	64	6	3525	100	285.21	282.41	-	-	242	106	66	20	-	24.00
		TL 14M-72S-90	72	8	3525	100	320.86	318.06	-	178	278	106	66	20	-	22.60
		TL 14M-80S-90	80	8	4030	115	356.51	353.71	-	215	314	106	76	15	-	27.00
		TL 14M-90S-90	90	8	4030	115	401.07	398.27	-	215	360	106	76	15	-	34.10
		TL 14M-112S-90	112	10	4535	125	499.11	496.31	-	215	456	106	90	8	-	46.00
		TL 14M-140S-90	140	10	4535	125	623.89	621.09	-	215	581	106	90	8	-	61.00
		TL 14M-168S-90	168	10	5040	130	748.66	745.87	-	267	706	106	102	2	-	90.00
		TL 14M-192S-90	192	10	5040	130	855.61	852.82	-	267	812	106	102	2	-	108.50

POLY CHAIN® GT® TAPER-LOCK® "PHOSPHATED" PULLEYS

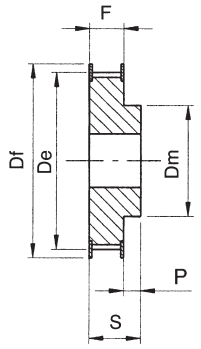

EXECUTION 1F

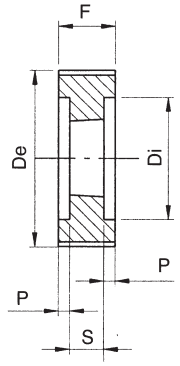

EXECUTION 6

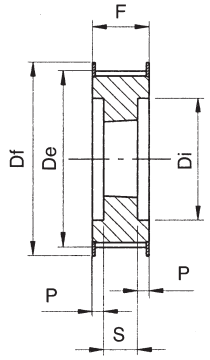

EXECUTION 7F

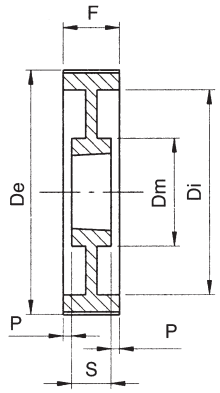

EXECUTION 8

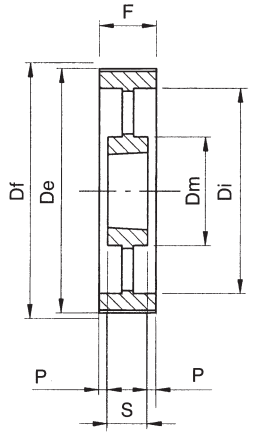

EXECUTION 10

POLY CHAIN GT 14M-125

CHARACTERISTICS		TYPE	No. of TEETH	EXEC.	BUSH	MAX. BORE	Dp PITCH LINE	De EXTERNAL	Df FLANGE	Dm HUB	Di	F	S	P	FLANGE No.	WEIGHT KG.
STEEL	WITH FLANGE	14M-38S-125	38	1F	-	115	169.34	166.54	183	141	-	141	161	-	172	20.30
		14M-40S-125	40	1F	-	125	178.25	175.45	188	156	-	141	161	-	174	23.00
		14M-44S-125	44	1F	-	140	196.08	193.28	211	169	-	141	161	-	175	28.80
		14M-48S-125	48	1F	-	160	213.90	211.11	226	185	-	141	161	-	180	34.60
		TL 14M-50S-125	50	7F	3525	100	222.82	220.02	240	-	180	141	65	38	169	16.80
		TL 14M-56S-125	56	7F	3525	100	249.55	246.76	256	-	207	141	65	38	182	21.60
CAST IRON	WITHOUT FLANGE	TL 14M-60S-125	60	6	4030	115	267.38	264.58	-	-	224	141	76	32.5	-	25.60
		TL 14M-64S-125	64	6	4030	115	285.21	282.41	-	-	242	141	76	32.5	-	29.70
		TL 14M-72S-125	72	8	4030	115	320.86	318.06	-	215	278	141	76	32.5	-	30.00
		TL 14M-80S-125	80	8	4030	125	356.51	353.71	-	215	314	141	76	32.5	-	33.40
		TL 14M-90S-125	90	8	4030	115	401.07	398.27	-	215	360	141	76	32.5	-	39.40
		TL 14M-112S-125	112	10	4535	125	499.11	496.31	-	215	456	141	89	26	-	56.00
		TL 14M-140S-125	140	10	4535	125	623.89	621.09	-	215	581	141	89	26	-	73.00
		TL 14M-168S-125	168	10	5040	125	748.66	745.87	-	267	706	141	102	19.5	-	101.00
		TL 14M-192S-125	192	10	5040	125	855.61	852.82	-	267	802	141	102	19.5	-	121.50

"GATES" licence N. 0.203.235

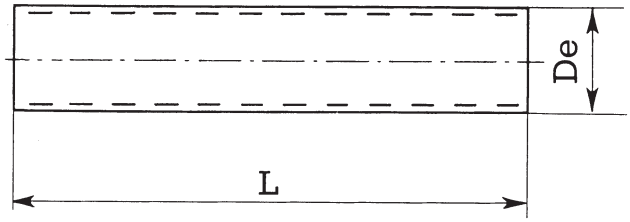

POLY CHAIN GT® 8M (8mm. pitch)

CODE REFERENCE	Dp	De	L	SUITABLE FLANGE
8M-22	56.02	54.42	180	58
8M-25	63.66	62.06	180	61
8M-28	71.30	69.70	180	62
8M-30	76.39	74.79	180	82
8M-32	81.49	79.89	180	65
8M-34	86.58	84.98	180	66
8M-36	91.67	90.07	180	68
8M-38	96.77	95.17	180	70
8M-40	101.86	100.26	200	71
8M-45	114.59	112.99	200	75
8M-48	122.23	120.63	200	78
8M-50	127.32	125.72	200	80
8M-56	142.60	141.00	200	85
8M-60	152.79	151.19	200	86
8M-64	162.97	161.37	200	90
8M-75	190.99	189.39	200	100

POLY CHAIN GT® 14M (14mm. pitch)

CODE REFERENCE	Dp	De	L	SUITABLE FLANGE
14M-28	124.78	121.98	200	153
14M-30	133.69	130.89	200	154
14M-32	142.60	139.80	200	157
14M-34	151.52	148.72	200	158
14M-36	160.43	157.63	200	168
14M-38	169.34	166.54	200	161
14M-40	178.25	175.45	200	162
14M-45	196.08	193.28	200	165
14M-48	213.90	211.11	200	167

"GATES" licence No. 0.203.236

MATERIAL: STEEL C 40 UNI 7845

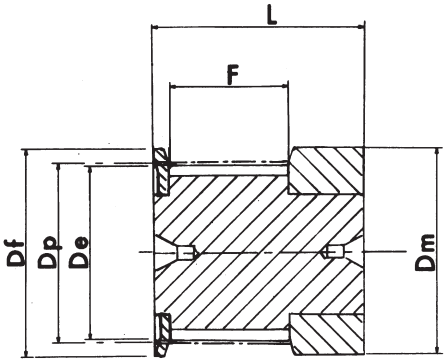

EXECUTION 0F

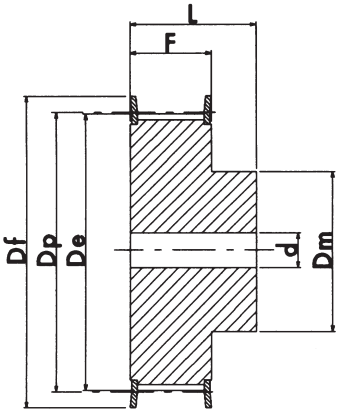

EXECUTION 1F

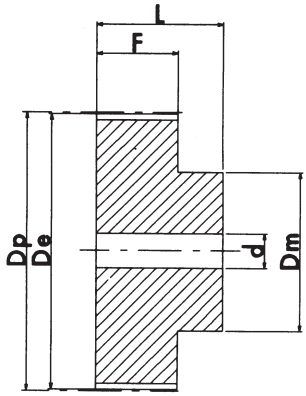

EXECUTION 2

How to identify a pulley – Example: 31 T10 25

Pulley width **(mm) 31**
Pulley pitch **(mm) T10**
No. of teeth on pulley **25**

material: ALUMINIUM

T20 pitch pulleys and bars are manufactured on request.

T 2.5 (2.5 mm pitch) DESIGNED FOR 6 mm WIDE BELTS

ALUMINIUM

DESCRIPTION	EXEC.	No. of TEETH	Dp	De	Df	Dm	F	L	d	FLANGE No.
16 T2.5 12	0F	12	9.60	9.00	13.0	13	9	16	-	501
16 T2.5 14	0F	14	11.20	10.60	15.0	15	9	16	-	502
16 T2.5 15	0F	15	12.00	11.40	15.0	15	9	16	-	502
16 T2.5 16	0F	16	12.80	12.20	16.0	16	9	16	-	503
16 T2.5 16	1F	18	14.40	13.80	17.5	10	10	16	-	504
16 T2.5 19	1F	19	15.20	14.60	20.0	10	10	16	-	505
16 T2.5 20	1F	20	16.00	15.40	20.0	11	10	16	-	505
16 T2.5 22	1F	22	17.60	17.00	22.0	11	10	16	-	512
16 T2.5 24	1F	24	19.15	18.55	22.0	12	10	16	4	512
16 T2.5 25	1F	25	19.95	19.35	25.0	13	10	16	4	506
16 T2.5 26	1F	26	20.75	20.15	26.0	14	10	16	4	507
16 T2.5 28	1F	28	22.35	21.75	26.0	14	10	16	4	507
16 T2.5 30	1F	30	23.95	23.35	26.0	16	10	16	6	508
16 T2.5 32	1F	32	25.55	24.95	32.0	16	10	16	6	509
16 T2.5 36	1F	36	28.75	28.10	36.0	20	10	16	6	510
16 T2.5 40	1F	40	31.90	31.30	38.0	22	10	16	6	511
16 T2.5 44	2	44	35.10	34.50	-	24	10	16	6	-
16 T2.5 48	2	48	38.30	37.70	-	26	10	16	6	-
16 T2.5 60	2	60	47.85	47.25	-	34	10	16	8	-

" T " PULLEYS

T 5 (5 mm pitch) DESIGNED FOR 10 mm WIDE BELTS

ALUMINIUM

DESCRIPTION	EXEC.	No. of TEETH	Dp	De	Df	Dm	F	L	d	FLANGE No.
21 T5 10	1F	10	15.92	15.05	19.5	8	15	21	-	3
21 T5 12	1F	12	19.10	18.25	23.0	11	15	21	-	1
21 T5 14	1F	14	22.29	21.45	25.0	13	15	21	-	2
21 T5 15	1F	15	23.88	23.05	28.0	16	15	21	6	4
21 T5 16	1F	16	25.47	24.60	32.0	18	15	21	6	5
21 T5 18	1F	18	28.65	27.80	32.0	20	15	21	6	6
21 T5 19	1F	19	30.25	29.40	36.0	22	15	21	6	8
21 T5 20	1F	20	31.83	31.00	36.0	23	15	21	6	8
21 T5 22	1F	22	35.02	34.15	38.0	24	15	21	6	9
21 T5 24	1F	24	38.21	37.40	42.0	26	15	21	6	13
21 T5 25	1F	25	39.80	38.95	44.0	26	15	21	6	12
21 T5 26	1F	26	41.39	40.60	44.0	26	15	21	6	12
21 T5 27	1F	27	42.98	42.20	48.0	30	15	21	8	11
21 T5 28	1F	28	44.58	43.75	48.0	32	15	21	8	11
21 T5 30	1F	30	47.76	46.95	51.0	34	15	21	8	16
21 T5 32	1F	32	50.94	50.10	54.0	38	15	21	8	18
21 T5 36	1F	36	57.31	56.45	64.0	38	15	21	8	23
21 T5 40	1F	40	63.66	62.85	66.5	40	15	21	8	24
21 T5 42	1F	42	66.86	66.00	70.0	40	15	21	8	26
21 T5 44	2	44	70.05	69.20	-	45	15	21	8	–
21 T5 48	2	48	76.42	75.55	-	50	15	21	8	–
21 T5 60	2	60	95.52	94.65	-	65	15	21	8	–

T 5 (5 mm pitch) DESIGNED FOR 16 mm WIDE BELTS

ALUMINIUM

DESCRIPTION	EXEC.	No. of TEETH	Dp	De	Df	Dm	F	L	d	FLANGE No.
27 T5 10	1F	10	15.92	15.05	19.5	8	21	27	-	3
27 T5 12	1F	12	19.10	18.25	23.0	11	21	27	-	1
27 T5 14	1F	14	22.29	21.45	25.0	13	21	27	-	2
27 T5 15	1F	15	23.88	23.05	28.0	16	21	27	6	4
27 T5 16	1F	16	25.47	24.60	32'0	18	21	27	6	5
27 T5 18	1F	18	28.65	27.80	32.0	20	21	27	6	6
27 T5 19	1F	19	30.25	29.40	36.0	22	21	27	6	8
27 T5 20	1F	20	31.83	31.00	36.0	23	21	27	6	8
27 T5 22	1F	22	35.02	34.15	38.0	24	21	27	6	9
27 T5 24	1F	24	38.21	37.40	42.0	26	21	27	6	13
27 T5 25	1F	25	39.80	38.95	44.0	26	21	27	6	12
27 T5 26	1F	26	41.39	40.60	44.0	26	21	27	6	12
27 T5 27	1F	27	42.98	42.20	48.0	30	21	27	8	11
27 T5 28	1F	28	44.58	43.75	48.0	32	21	27	8	11
27 T5 30	1F	30	47.76	46.95	51.0	34	21	27	8	16
27 T5 32	1F	32	50.94	50.10	54.0	38	21	27	8	18
27 T5 36	1F	36	57.31	56.45	64.0	38	21	27	8	23
27 T5 40	1F	40	63.66	62.85	66.5	40	21	27	8	24
27 T5 42	1F	42	66.86	66.00	70.0	40	21	27	8	26
27 T5 44	2	44	70.05	69.20	-	45	21	27	8	-
27 T5 48	2	48	76.42	75.55	-	50	21	27	8	-
27 T5 60	2	60	95.52	94.65	-	65	21	27	8	-

T 5 (5 mm pitch) DESIGNED FOR 25 mm WIDE BELTS

ALUMINIUM

DESCRIPTION	EXEC.	No. of TEETH	Dp	De	Df	Dm	F	L	d	FLANGE No.
36 T5 10	1F	10	15.92	15.05	19.5	8	30	36	-	3
36 T5 12	1F	12	19.10	18.25	23.0	11	30	36	-	1
36 T5 14	1F	14	22.29	21.45	25.0	13	30	36	-	2
36 T5 15	1F	15	23.88	23.05	28.0	16	30	36	6	4
36 T5 16	1F	16	25.47	24.60	32.0	18	30	36	6	5
36 T5 18	1F	18	28.65	27.80	32.0	20	30	36	6	6
36 T5 19	1F	19	30.25	29.40	36.0	22	30	36	6	8
36 T5 20	1F	20	31.83	31.00	36.0	23	30	36	6	8
36 T5 22	1F	22	35.02	34.15	38.0	24	30	36	6	9
36 T5 24	1F	24	38.21	37.40	42.0	26	30	36	8	13
36 T5 25	1F	25	39.80	38.95	44.0	26	30	36	8	12
36 T5 26	1F	26	41.39	40.60	44.0	26	30	36	8	12
36 T5 27	1F	27	42.98	42.20	48.0	30	30	36	8	11
36 T5 28	1F	28	44.58	43.75	48.0	32	30	36	8	11
36 T5 30	1F	30	47.76	46.95	51.0	34	30	36	8	16
36 T5 32	1F	32	50.94	50.10	54.0	38	30	36	8	18
36 T5 36	1F	36	57.31	56.45	64.0	38	30	36	8	23
36 T5 40	1F	40	63.66	62.85	66.5	40	30	36	8	24
36 T5 42	1F	42	66.86	66.00	70.0	40	30	36	8	26
36 T5 44	2	44	70.05	69.20	-	45	30	36	8	-
36 T5 48	2	48	76.42	75.55	-	50	30	36	8	-
36 T5 60	2	60	95.52	94.65	-	65	30	36	8	-

T20 pitch pulleys and bars are manufactured on request.

T 10 (10 mm pitch) DESIGNED FOR 16 mm WIDE BELTS

ALUMINIUM

DESCRIPTION	EXEC.	No. of TEETH	Dp	De	Df	Dm	F	L	d	FLANGE No.
31 T10 12	1F	12	38.20	36.35	42	28	21	31	6	13
31 T10 14	1F	14	44.56	42.70	48	32	21	31	8	11
31 T10 15	1F	15	47.75	45.90	51	32	21	31	8	16
31 T10 16	1F	16	50.93	49.10	54	35	21	31	8	18
31 T10 18	1F	18	57.29	55.45	60	40	21	31	8	21
31 T10 19	1F	19	60.48	58.65	66	44	21	31	8	24
31 T10 20	1F	20	63.66	61.80	66	46	21	31	8	24
31 T10 22	1F	22	70.03	68.20	75	52	21	31	8	27
31 T10 24	1F	24	76.39	74.55	83	58	21	31	8	29
31 T10 25	1F	25	79.58	77.75	83	60	21	31	8	29
31 T10 26	1F	26	82.76	80.90	87	60	21	31	8	31
31 T10 27	1F	27	85.95	84.10	91	60	21	31	8	32
31 T10 28	1F	28	89.12	87.25	93	60	21	31	8	33
31 T10 30	1F	30	95.49	93.65	102	60	21	31	8	35
31 T10 32	1F	32	101.86	100.00	106	65	21	31	10	38
31 T10 36	1F	36	114.59	112.75	119	70	21	31	10	43
31 T10 40	1F	40	127.32	125.45	131	80	21	31	10	47
31 T10 44	2	44	140.05	138.20	-	88	21	31	10	-
31 T10 48	2	48	152.78	150.95	-	95	21	31	16	-
31 T10 60	2	60	190.98	189.10	-	110	21	31	16	-

T 10 (10 mm pitch) DESIGNED FOR 25 mm WIDE BELTS

ALUMINIUM

DESCRIPTION	EXEC.	No. of TEETH	Dp	De	Df	Dm	F	L	d	FLANGE No.
40 T10 12	1F	12	38.20	36.35	42	28	30	40	6	13
40 T10 14	1F	14	44.56	42.70	48	32	30	40	8	11
40 T10 15	1F	15	47.75	45.90	51	32	30	40	8	16
40 T10 16	1F	16	50.93	49.10	54	35	30	40	8	18
40 T10 18	1F	18	57.29	55.45	60	40	30	40	8	21
40 T10 19	1F	19	60.48	58.65	66	44	30	40	8	24
40 T10 20	1F	20	63.66	61.80	66	46	30	40	8	24
40 T10 22	1F	22	70.03	68.20	75	52	30	40	8	27
40 T10 24	1F	24	76.39	74.55	83	58	30	40	8	29
40 T10 25	1F	25	79.58	77.75	83	60	30	40	8	29
40 T10 26	1F	26	82.76	80.90	87	60	30	40	8	31
40 T10 27	1F	27	85.95	84.10	91	60	30	40	8	32
40 T10 28	1F	28	89.12	87.25	93	60	30	40	8	33
40 T10 30	1F	30	95.49	93.65	102	60	30	40	8	35
40 T10 32	1F	32	101.86	100.00	106	65	30	40	10	38
40 T10 36	1F	36	114.59	112.75	119	70	30	40	10	43
40 T10 40	1F	40	127.32	125.45	131	80	30	40	10	47
40 T10 44	2	44	140.05	138.20	-	88	30	40	10	-
40 T10 48	2	48	152.78	150.95	-	95	30	40	16	-
40 T10 60	2	60	190.98	189.15	-	110	30	40	16	-

T20 pitch pulleys and bars are manufactured on request.

T 10 (10 mm pitch) DESIGNED FOR 32 mm WIDE BELTS

ALUMINIUM

DESCRIPTION	EXEC.	No. of TEETH	Dp	De	Df	Dm	F	L	d	FLANGE No.
47 T10 18	1F	18	57.29	55.45	60	40	37	47	10	21
47 T10 19	1F	19	60.48	58.60	66	44	37	47	10	24
47 T10 20	1F	20	63.66	61.80	66	46	37	47	12	24
47 T10 22	1F	22	70.03	68.20	75	52	37	47	12	27
47 T10 24	1F	24	76.39	74.55	83	58	37	47	12	29
47 T10 25	1F	25	79.58	77.75	83	60	37	47	12	29
47 T10 26	1F	26	82.76	80.90	87	60	37	47	12	31
47 T10 27	1F	27	85.95	84.10	91	60	37	47	12	32
47 T10 28	1F	28	89.12	87.25	93	60	37	47	12	33
47 T10 30	1F	30	95.49	93.65	102	60	37	47	12	35
47 T10 32	1F	32	101.86	100.00	106	65	37	47	12	38
47 T10 36	1F	36	114.59	112.75	119	70	37	47	16	43
47 T10 40	1F	40	127.32	125.45	131	80	37	47	16	47
47 T10 44	2	44	140.05	138.20	-	88	37	47	16	-
47 T10 48	2	48	152.78	150.95	-	95	37	47	16	-
47 T10 60	2	60	190.98	189 10	-	110	37	47	16	-

T 10 (10 mm pitch) DESIGNED FOR 50 mm WIDE BELTS

ALUMINIUM

DESCRIPTION	EXEC.	No. of TEETH	Dp	De	Df	Dm	F	L	d	FLANGE No.
66 T10 18	1F	18	57.29	55.45	60	40	56	66	10	21
66 T10 19	1F	19	60.48	58.65	66	44	56	66	10	24
66 T10 20	1F	20	63.66	61.80	66	46	56	66	12	24
66 T10 22	1F	22	70.03	68.20	75	52	56	66	12	27
66 T10 24	1F	24	76.39	74.55	83	58	56	66	12	29
66 T10 25	1F	25	79.58	77.70	83	60	56	66	12	29
66 T10 26	1F	26	82.76	80.90	87	60	56	66	12	31
66 T10 27	1F	27	85.95	84.10	91	60	56	66	12	32
66 T10 28	1F	28	89.12	87.25	93	60	56	66	12	33
66 T10 30	1F	30	95.49	93.65	102	60	56	66	12	35
66 T10 32	1F	32	101.86	100.00	106	65	56	66	12	38
66 T10 36	1F	36	114.59	112.75	119	70	56	66	16	43
66 T10 40	1F	40	127.32	125.45	131	80	56	66	16	47
66 T10 44	2	44	140.05	138.20	-	88	56	66	16	-
66 T10 48	2	48	152.78	150.95	-	95	56	66	16	-
66 T10 60	2	60	190.98	189.10	-	110	56	66	16	-

T20 pitch pulleys and bars are manufactured on request.

" T " BARS

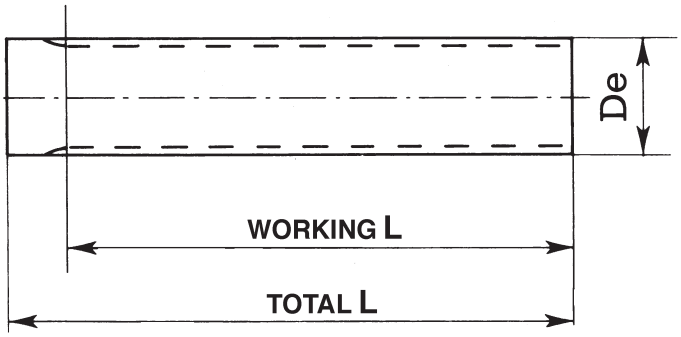

N.B. T 2.5 - T 5 - T 10 pitch bars are only manufactured in Aluminium suitable for hard anodising.

T20 pitch pulleys and bars are manufactured, on request

T 2.5 (2.5 mm pitch)

DESCRIPTION	No. of TEETH	De EXTERNAL	L WORKING	L TOTAL
T2.5-10	10	7.45	50	75
T2.5-12	12	9.00	50	75
T2.5-13	13	9.80	50	75
T2.5-14	14	10.60	50	75
T2.5-15	15	11.40	50	75
T2.5-16	16	12.20	50	75
T2.5-17	17	13.00	50	75
T2.5-18	18	13.80	50	75
T2.5-19	19	14.60	90	120
T2.5-20	20	15.40	90	120
T2.5-21	21	16.20	90	120
T2.5-22	22	17.00	125	140
T2.5-24	24	18.55	125	140
T2.5-26	26	20.15	125	140
T2.5-27	27	20.95	125	140
T2.5-28	28	21.75	125	140
T2.5-29	29	22.55	125	140
T2.5-30	30	23.35	125	140
T2.5-32	32	24.95	125	140
T2.5-34	34	26.55	125	140
T2.5-35	35	27.35	132	140
T2.5-36	36	28.10	132	140
T2.5-38	38	29.70	140	140
T2.5-40	40	31.30	140	140
T2.5-42	42	32.90	140	140
T2.5-44	44	34.50	140	140
T2.5-45	45	35.30	140	140
T2.5-48	48	37.70	140	140
T2.5-50	50	39.29	160	160
T2.5-60	60	47.25	160	160
T2.5-65	65	51.20	160	160
T2.5-70	70	55.20	160	160
T2.5-72	72	56.80	160	160
T2.5-90	90	71.12	160	160
T2.5-100	100	79.08	160	160

T 5 (5 mm pitch)

DESCRIPTION	No. of TEETH	De EXTERNAL	L WORKING	L TOTAL
T5-10	10	15.05	125	140
T5-11	11	16.65	125	140
T5-12	12	18.25	125	140
T5-13	13	19.85	125	140
T5-14	14	21.45	140	140
T5-15	15	23.05	140	140
T5-16	16	24.60	140	140
T5-17	17	26.20	140	140
T5-18	18	27.00	140	140
T5-19	19	29.40	140	140
T5-20	20	31.00	160	160
T5-21	21	32.70	160	160
T5-22	22	34.15	160	160
T5-23	23	35.85	160	160
T5-24	24	37.40	160	160
T5-25	25	38.95	160	160
T5-26	26	40.60	160	160
T5-27	27	42.20	160	160
T5-28	28	43.75	160	160
T5-29	29	45.35	160	160
T5-30	30	46.95	160	160
T5-32	32	50.10	160	160
T5-34	34	53.25	160	160
T5-35	35	54.85	160	160
T5-36	36	56.45	160	160
T5-37	37	58.06	160	160
T5-38	38	59.65	160	160
T5-40	40	62.85	160	160
T5-42	42	66.00	160	160
T5-44	44	69.20	160	160
T5-45	45	70.80	160	160
T5-46	46	72.40	160	160
T5-48	48	75.55	160	160
T5-50	50	78.75	160	160
T5-60	60	94.65	160	160
T5-72	72	113.75	160	160
T5-80	80	126.48	160	160
T5-90	90	142.40	160	160
T5-100	100	158.31	160	160

T 10 (10 mm pitch)

DESCRIPTION	No. of TEETH	De EXTERNAL	L WORKING	L TOTAL
T10-10	10	29.98	140	140
T10-11	11	33.16	140	140
T10-12	12	36.35	140	140
T10-13	13	39.55	140	140
T10-14	14	42.70	160	160
T10-15	15	45.90	160	160
T10-16	16	49.10	160	160
T10-17	17	52.25	160	160
T10-18	18	55.45	160	160
T10-19	19	58.65	160	160
T10-20	20	61.80	160	160
T10-21	21	65.00	160	160
T10-22	22	68.15	160	160
T10-23	23	71.35	160	160
T10-24	24	74.55	160	160
T10-26	26	80.90	160	160
T10-28	28	87.25	160	160
T10-30	30	93.65	160	160
T10-32	32	100.00	160	160
T10-34	34	106.40	160	160
T10-36	36	112.75	160	160
T10-38	38	119.10	160	160
T10-40	40	125.45	160	160
T10-45	45	141.40	160	160
T10-48	48	150.95	160	160
T10-60	60	189.15	160	160
T10-72	72	227.29	160	160

"CT" PULLEYS FOR "AT" POLYURETHANE BELTS

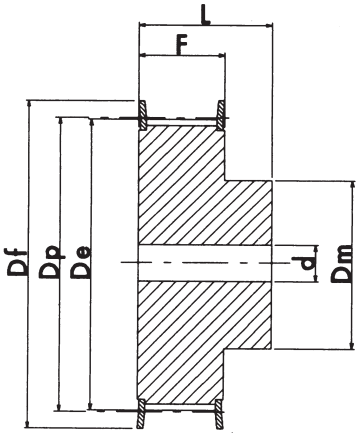

EXECUTION 1F

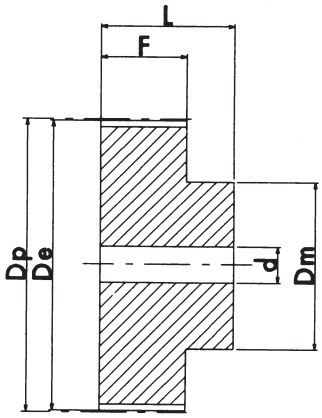

EXECUTION 2

How to identify a pulley - Example:
21 CT5 25

Pulley length	**(mm)**	**21**
Pulley pitch	**(mm)**	**CT5**
No. of teeth on pulley		**25**

material: ALUMINIUM

CT5 (5 mm pitch) DESIGNED FOR 10 mm WIDE BELT

ALUMINIUM

DESCRIPTION	EXEC.	No. of TEETH	Dp	De	Df	Dm	F	L	d	FLANGE No.
21 CT5 12	1F	12	19.10	17.85	23.0	11	15	21	-	1
21 CT5 14	1F	14	22.29	21.05	25.0	13	15	21	-	2
21 CT5 15	1F	15	23.88	22.65	28.0	16	15	21	6	4
21 CT5 16	1F	16	25.47	24.20	32.0	18	15	21	6	5
21 CT5 18	1F	18	28.65	27.40	32.0	20	15	21	6	6
21 CT5 19	1F	19	30.25	29.00	36.0	22	15	21	6	8
21 CT5 20	1F	20	31.83	30.60	36.0	23	15	21	6	8
21 CT5 22	1F	22	35.02	33.85	38.0	24	15	21	6	9
21 CT5 24	1F	24	38.21	37.00	42.0	26	15	21	6	13
21 CT5 25	1F	25	39.80	38.60	44.0	26	15	21	6	12
21 CT5 26	1F	26	41.39	40.20	44.0	26	15	21	6	12
21 CT5 27	1F	27	42.98	41.80	48.0	30	15	21	8	11
21 CT5 28	1F	28	44.58	43.35	48.0	32	15	21	8	11
21 CT5 30	1F	30	47.76	46.55	51.0	34	15	21	8	16
21 CT5 32	1F	32	50.94	49.70	54.0	38	15	21	8	18
21 CT5 36	1F	36	57.31	56.05	64.0	38	15	21	8	23
21 CT5 40	1F	40	63.66	62.45	66.5	40	15	21	8	24
21 CT5 42	1F	42	66.86	65.60	70.0	40	15	21	8	26
21 CT5 44	2	44	70.05	68.80	-	45	15	21	8	-
21 CT5 48	2	48	76.42	75.15	-	50	15	21	8	-
21 CT5 60	2	60	95.52	94.25	-	65	15	21	8	-

"CT" PULLEYS FOR "AT" POLYURETHANE BELTS

CT5 (5 mm pitch) DESIGNED FOR 16 mm WIDE BELT

ALUMINIUM

DESCRIPTION	EXEC.	No. of TEETH	Dp	De	Df	Dm	F	L	d	FLANGE No.
27 CT5 12	1F	12	19.10	17.85	23.0	11	21	27	-	1
27 CT5 14	1F	14	22.29	21.05	25.0	13	21	27	-	2
27 CT5 15	1F	15	23.88	22.65	28.0	16	21	27	6	4
27 CT5 16	1F	16	25.47	24.20	32.0	18	21	27	6	5
27 CT5 18	1F	18	28.65	27.40	32.0	20	21	27	6	6
27 CT5 19	1F	19	30.25	29.00	36.0	22	21	27	6	8
27 CT5 20	1F	20	31.83	30.60	36.0	23	21	27	6	8
27 CT5 22	1F	22	35.02	33.85	38.0	24	21	27	6	9
27 CT5 24	1F	24	38.21	37.00	42.0	26	21	27	6	13
27 CT5 25	1F	25	39.80	38.60	44.0	26	21	27	6	12
27 CT5 26	1F	26	41.39	40.20	44.0	26	21	27	6	12
27 CT5 27	1F	27	42.98	41.80	48.0	30	21	27	8	11
27 CT5 28	1F	28	44.58	43.35	48.0	32	21	27	8	11
27 CT5 30	1F	30	47.76	46.55	51.0	34	21	27	8	16
27 CT5 32	1F	32	50.94	49.70	54.0	38	21	27	8	18
27 CT5 36	1F	36	57.31	56.05	64.0	38	21	27	8	23
27 CT5 40	1F	40	63.66	62.45	66.5	40	21	27	8	24
27 CT5 42	1F	42	66.86	65.60	70	40	21	27	8	26
27 CT5 44	2	44	70.05	68.80	-	45	21	27	8	-
27 CT5 48	2	48	76.42	75.15	-	50	21	27	8	-
27 CT5 60	2	60	95.52	94.25	-	65	21	27	8	-

CT5 (5 mm pitch) DESIGNED FOR 25 mm WIDE BELT

ALUMINIUM

DESCRIPTION	EXEC.	No. of TEETH	Dp	De	Df	Dm	F	L	d	FLANGE No.
36 CT5 12	1F	12	19.10	17.85	23.0	11	30	36	-	1
36 CT5 14	1F	14	22.29	21.05	25.0	13	30	36	-	2
36 CT5 15	1F	15	23.88	22.65	28.0	16	30	36	6	4
36 CT5 16	1F	16	25.47	24.20	32.0	18	30	36	6	5
36 CT5 18	1F	18	28.65	27.40	32.0	20	30	36	6	6
36 CT5 19	1F	19	30.25	29.00	36.0	22	30	36	6	8
36 CT5 20	1F	20	31.83	30.60	36.0	23	30	36	6	8
36 CT5 22	1F	22	35.02	33.85	38.0	24	30	36	6	9
36 CT5 24	1F	24	38.21	37.00	42.0	26	30	36	6	13
36 CT5 25	1F	25	39.80	38.60	44.0	26	30	36	6	12
36 CT5 26	1F	26	41.39	40.20	44.0	26	30	36	6	12
36 CT5 27	1F	27	42.98	41.80	48.0	30	30	36	8	11
36 CT5 28	1F	28	44.58	43.35	48.0	32	30	36	8	11
36 CT5 30	1F	30	47.76	46.55	51.0	34	30	36	8	16
36 CT5 32	1F	32	50.94	49.70	54.0	38	30	36	8	18
36 CT5 36	1F	36	57.31	56.05	64.0	38	30	36	8	23
36 CT5 40	1F	40	63.66	62.45	66.5	40	30	36	8	24
36 CT5 42	1F	42	66.86	65.60	70.0	40	30	36	8	26
36 CT5 44	2	44	70.05	68.80	-	45	30	36	8	-
36 CT5 48	2	48	76.42	75.15	-	50	30	36	8	-
36 CT5 60	2	60	95.52	94.25	-	65	30	36	8	-

CT20 pitch pulleys and bars are manufactured on request.

"CT" PULLEYS FOR "AT" POLYURETHANE BELTS

CT10 (10 mm pitch) DESIGNED FOR 16 mm WIDE BELT

ALUMINIUM

DESCRIPTION	EXEC.	No. of TEETH	Dp	De	Df	Dm	F	L	d	FLANGE No.
31 CT10 15	1F	15	47.75	45.90	51	32	21	31	8	16
31 CT10 16	1F	16	50.93	49.05	54	35	21	31	8	18
31 CT10 18	1F	18	57.29	55.45	60	40	21	31	8	21
31 CT10 19	1F	19	60.48	58.60	66.5	44	21	31	8	24
31 CT10 20	1F	20	63.66	61.80	66.5	46	21	31	8	24
31 CT10 22	1F	22	70.03	68.15	75	52	21	31	8	27
31 CT10 24	1F	24	76.39	74.55	83	58	21	31	8	29
31 CT10 25	1F	25	79.58	77.70	83	60	21	31	8	29
31 CT10 26	1F	26	82.76	80.90	87	60	21	31	8	31
31 CT10 27	1F	27	85.95	84.10	91	60	21	31	8	32
31 CT10 28	1F	28	89.12	87.25	93	60	21	31	8	33
31 CT10 30	1F	30	95.49	93.65	102	60	21	31	8	35
31 CT10 32	1F	32	101.86	100.00	106	65	21	31	10	38
31 CT10 36	1F	36	114.59	112.75	119	70	21	31	10	43
31 CT10 40	1F	40	127.32	125.45	131	80	21	31	10	47
31 CT10 44	2	44	140.05	138.20	-	88	21	31	10	-
31 CT10 48	2	48	152.78	150.95	-	95	21	31	16	-
31 CT10 60	2	60	190.98	189.10	-	110	21	31	16	-

CT10 (10 mm pitch) DESIGNED FOR 25 mm WIDE BELT

ALUMINIUM

DESCRIPTION	EXEC.	No. of TEETH	Dp	De	Df	Dm	F	L	d	FLANGE No.
40 CT10 15	1F	15	47.75	45.90	51	32	30	40	8	16
40 CT10 16	1F	16	50.93	49.05	54	35	30	40	8	18
40 CT10 18	1F	18	57.29	55.45	60	40	30	40	8	21
40 CT10 19	1F	19	60.48	58.60	66.5	44	30	40	8	24
40 CT10 20	1F	20	63.66	61.80	66.5	46	30	40	8	24
40 CT10 22	1F	22	70.03	68.15	75	52	30	40	8	27
40 CT10 24	1F	24	76.39	74.55	83	58	30	40	8	29
40 CT10 25	1F	25	79.58	77.70	83	60	30	40	8	29
40 CT10 26	1F	26	82.76	80.90	87	60	30	40	8	31
40 CT10 27	1F	27	85.95	84.10	91	60	30	40	8	32
40 CT10 28	1F	28	89.12	87.25	93	60	30	40	8	33
40 CT10 30	1F	30	95.49	93.65	102	60	30	40	8	35
40 CT10 32	1F	32	101.86	100.00	106	65	30	40	10	38
40 CT10 36	1F	36	114.59	112.75	119	70	30	40	10	43
40 CT10 40	1F	40	127.32	125.45	131	80	30	40	10	47
40 CT10 44	2	44	140.05	138.20	-	88	30	40	10	-
40 CT10 48	2	48	152.78	150.95	-	95	30	40	16	-
40 CT10 60	2	60	190.98	189.10	-	110	30	40	16	-

CT20 pitch pulleys and bars are manufactured on request.

"CT" PULLEYS FOR "AT" POLYURETHANE BELTS

CT10 (10 mm pitch) DESIGNED FOR 32 mm WIDE BELT

ALUMINIUM

DESCRIPTION	EXEC.	No. of TEETH	Dp	De	Df	Dm	F	L	d	FLANGE No.
47 CT10 18	1F	18	57.29	55.45	60	40	37	47	10	21
47 CT10 19	1F	19	60.48	58.60	66.5	44	37	47	10	24
47 CT10 20	1F	20	63.66	61.80	66.5	46	37	47	12	24
47 CT10 22	1F	22	70.03	68.15	75	52	37	47	12	27
47 CT10 24	1F	24	76.39	74.55	83	58	37	47	12	29
47 CT10 25	1F	25	79.58	77.70	83	60	37	47	12	29
47 CT10 26	1F	26	82.76	80.90	87	60	37	47	12	31
47 CT10 27	1F	27	85.95	84.10	91	60	37	47	12	32
47 CT10 28	1F	28	89.12	87.25	93	60	37	47	12	33
47 CT10 30	1F	30	95.49	93.65	102	60	37	47	12	35
47 CT10 32	1F	32	101.86	100.00	106	65	37	47	12	38
47 CT10 36	1F	36	114.59	112.75	119	70	37	47	16	43
47 CT10 40	1F	40	127.32	125.45	131	80	37	47	16	47
47 CT10 44	2	44	140.05	138.20	-	88	37	47	16	-
47 CT10 48	2	48	152.78	150.95	-	95	37	47	16	-
47 CT10 60	2	60	190.98	189.10	-	110	37	47	16	-

CT10 (10 mm pitch) DESIGNED FOR 50 mm WIDE BELT

ALUMINIUM

DESCRIPTION	EXEC.	No. of TEETH	Dp	De	Df	Dm	F	L	d	FLANGE No.
66 CT10 18	1F	18	57.29	55.45	60	40	56	66	10	21
66 CT10 19	1F	19	60.48	58.60	66.5	44	56	66	10	24
66 CT10 20	1F	20	63.66	61.80	66.5	46	56	66	12	24
66 CT10 22	1F	22	70.03	68.15	75	52	56	66	12	27
66 CT10 24	1F	24	76.39	74.55	83	58	56	66	12	29
66 CT10 25	1F	25	79.58	77.70	83	60	56	66	12	29
66 CT10 26	1F	26	82.76	80.90	87	60	56	66	12	31
66 CT10 27	1F	27	85.95	84.10	91	60	56	66	12	32
66 CT10 28	1F	28	89.12	87.25	93	60	56	66	12	33
66 CT10 30	1F	30	95.49	93.65	102	60	56	66	12	35
66 CT10 32	1F	32	101.86	100.00	106	65	56	66	12	38
66 CT10 36	1F	36	114.59	112.75	119	70	56	66	16	43
66 CT10 40	1F	40	127.32	125.45	131	80	56	66	16	47
66 CT10 44	2	44	140.05	138.20	-	88	56	66	16	-
66 CT10 48	2	48	152.78	150.95	-	95	56	66	16	-
66 CT10 60	2	60	190.98	189.10	-	110	56	66	16	-

CT20 pitch pulleys and bars are manufactured on request.

"CT" BARS FOR "AT" POLYURETHANE BELTS

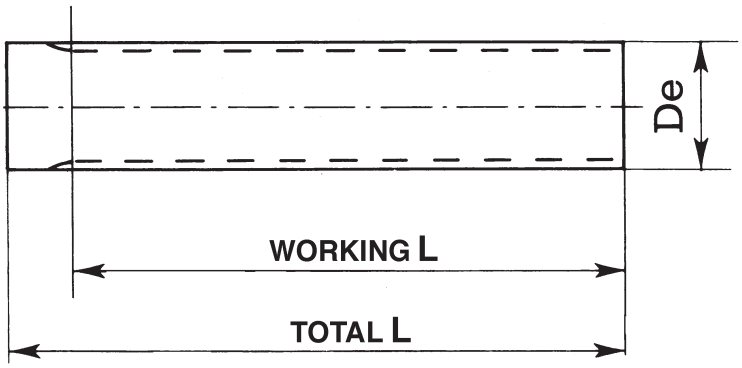

N.B. CT 5 - CT 10 pitch bars are only manufactured in Aluminium suitable for hard oxidation to thickness.

CT5 (5 mm pitch)

DESCRIPTION	No. of TEETH	De EXTERNAL	L WORKING	L TOTAL
CT5-12	12	17.85	140	140
CT5-13	13	19.45	140	140
CT5-14	14	21.05	140	140
CT5-15	15	22.65	140	140
CT5-16	16	24.20	140	140
CT5-18	18	27.40	140	140
CT5-19	19	29.00	140	140
CT5-20	20	30.60	160	160
CT5-21	21	32.30	160	160
CT5-22	22	33.85	160	160
CT5-23	23	35.45	160	160
CT5-24	24	37.00	160	160
CT5-25	25	38.55	160	160
CT5-26	26	40.20	160	160
CT5-28	28	43.25	160	160
CT5-30	30	46.55	160	160
CT5-32	32	49.70	160	160
CT5-34	34	52.85	160	160
CT5-36	36	56.05	160	160
CT5-38	38	59.25	160	160
CT5-40	40	62.45	160	160
CT5-42	42	65.60	160	160
CT5-44	44	68.80	160	160
CT5-46	46	72.00	160	160
CT5-48	48	75.15	160	160
CT5-52	52	81.55	160	160
CT5-56	56	87.90	160	160
CT5-60	60	94.25	160	160
CT5-64	64	100.65	160	160
CT5-72	72	113.35	160	160

CT10 (10 mm pitch)

DESCRIPTION	No. of TEETH	De EXTERNAL	L WORKING	L TOTAL
CT10-15	15	45.90	160	160
CT10-16	16	49.140	160	160
CT10-18	18	55.45	160	160
CT10-19	19	58.65	160	160
CT10-20	20	61.80	160	160
CT10-21	21	65.00	160	160
CT10-22	22	68.20	160	160
CT10-23	23	71.35	160	160
CT10-24	24	74.55	160	160
CT10-25	25	77.75	160	160
CT10-26	26	80.90	160	160
CT10-28	28	87.25	160	160
CT10-30	30	93.65	160	160
CT10-32	32	100.00	160	160
CT10-34	34	106.40	160	160
CT10-36	36	112.75	160	160
CT10-38	38	119.10	160	160
CT10-40	40	125.45	160	160
CT10-42	42	131.85	160	160
CT10-44	44	138.20	160	160
CT10-46	46	144.55	160	160
CT10-48	48	150.95	160	160
CT10-52	52	163.65	160	160
CT10-56	56	176.40	160	160
CT10-60	60	189.15	160	160

CT20 pitch pulleys and bars are manufactured on request

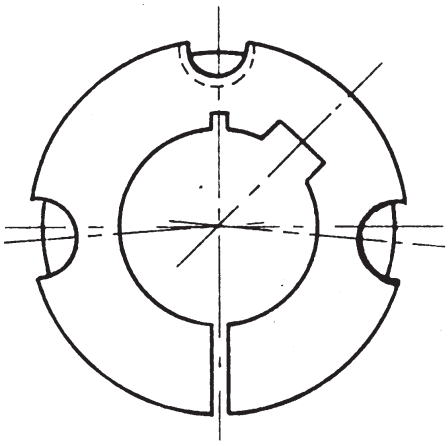

EXECUTION A
No. 3 BORES

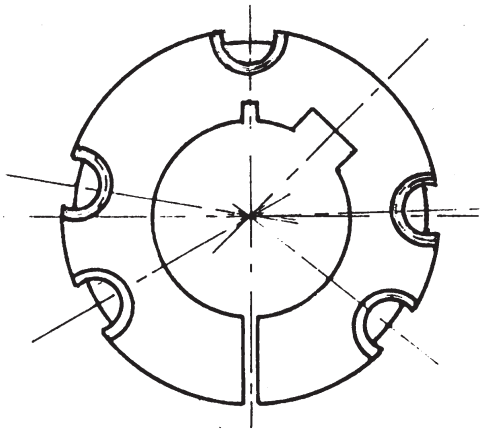

EXECUTION B
No. 5 BORES

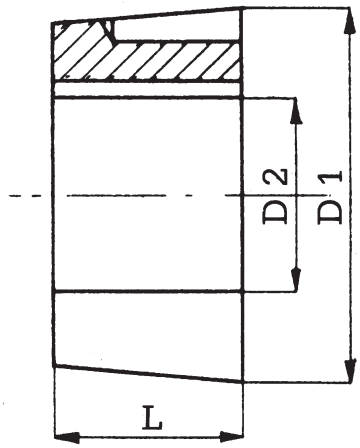

METRIC RANGE: BORES in mm. ISO G7 - Slots in compliance with DIN. 6885 - JS9

Bush Type	EXEC.	L	D1	Only pilot bore D2 H8	D2 Bore	B.S.W. screws	Tightening torque in N/m
1008	A	22	35	8	10 -12 -14 -16 -18 - 19 - 20 - 22 - 24 - 25	1/4" x 1/2"	5.6
1108	A	22	38	12	14 -19 - 20 - 24 - 25	1/4" x 1/2"	5.6
1210	A	25	47.5	12	14 - 16 -18 -19 - 20 - 24 - 25 - 28 - 30 - 32	3/8" x 5/8"	19.6
1215	A	38	47.5	12	14 -19 - 20 - 24 - 25 - 28	3/8" x 5/8"	19.6
1610	A	25	57	12	14 - 16 -19 - 20 - 24 - 25 - 28 - 30 - 32 - 35 - 38 - 40 - 42	3/8" x 5/8"	19.6
1615	A	38	57	12	19 - 20 - 22 - 24 - 25 - 28 - 30 - 32 - 35 - 38 - 40	3/8" x 5/8"	19.6
2012	A	32	70	16	19 - 20 - 24 - 25 - 28 - 30 - 32 - 35 - 38 - 40 - 42 - 45 - 48 - 50	7/16" x 7/8"	30.4
2517	A	45	85.5	15	19 - 20 - 24 - 25 - 28 - 30 - 32 - 35 - 38 - 40 - 42 - 45 - 48 - 50 - 55 - 60 - 65	1/2" x 1"	48
3020	A	51	108	20	28 - 30 - 32 - 35 - 38 - 40 - 42 - 45 - 48 - 50 - 55 - 60 - 65 - 70 - 75	5/8" x 1" 1/4	90
3030	A	76	108	30	38 - 42 - 45 - 48 - 50 - 55 - 60	5/8" x 1" 1/2	90
3525	B	65	127	30	38 - 40 - 42 - 45 - 48 - 50 - 55 - 60 - 65 - 70 - 75 - 80	1/2" x 1" 1/2	113
3535	B	89	127	30	40 - 42 - 45 - 48 - 50 - 55 - 60 - 65 - 70 - 75 - 80 - 85 - 90	1/2" x 1" 1/2	113
4030	B	76	146	30	40 - 42 - 45 - 48 - 50 - 55 - 60 - 65 - 70 - 75 - 80 - 90	5/8" x 1" 1/2	169
4040	B	102	146	35	50 - 55 - 60 - 65 - 70 - 75 - 80 - 85 - 90 - 95	5/8" x 1" 3/4	169
4535	B	89	162	30	65 - 70 - 75 - 80 - 85 - 90 - 95 - 100 - 110 - 120	3/4" x 2"	192
4545	B	115	162	35	65 - 70 - 75 - 80 - 85 - 90 - 95 - 100 - 110	3/4" x 2"	192
5040	B	102	177,6	50	70 - 75 - 80 - 85 - 90 - 100 - 110 - 120 - 125	7/8" x 2" 1/4	272
5050	B	127	177.6	50	70 - 75 - 80 - 85 - 90 - 95 - 100 - 110 - 115 - 120 - 125	7/8" x 2" 1/4	272